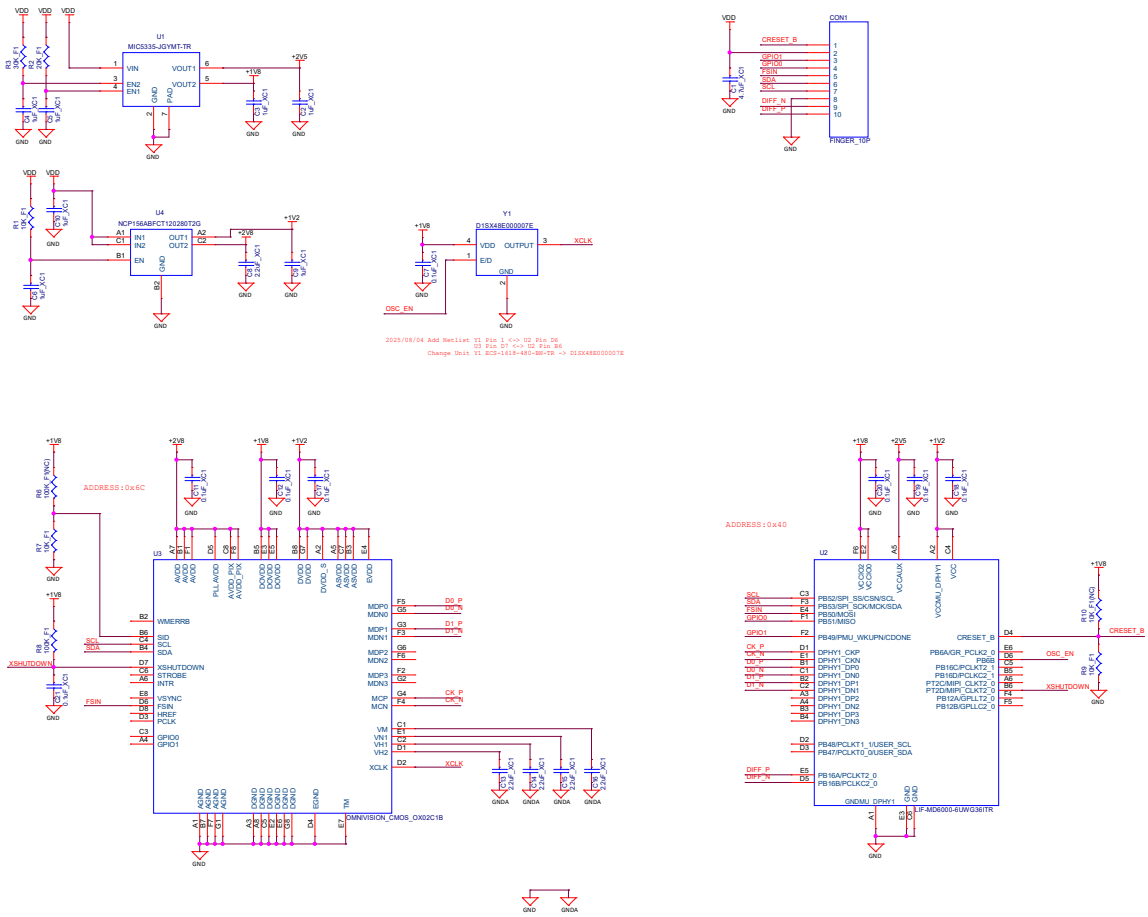

SONY 16M CMOS Sensor		
Title <Title>		
Size C	Document Number <Doc>	Rev <RevCode>
Date: Monday, August 04, 2025	Sheet 1 of 1	