CameraAggregatorBoard

Last Modified : 12/18/2025 10:30:23 AM

Change Approval History

Change Number	ECO-000193
Effective Date	12/29/2025 09:54:51 PM
Approval Date	12/29/2025 09:54:44 PM
Approvers	Brad Hartl (Director of Bioengineering), Ray Chiu (Director of Supply Chain and Sourcing), Christopher Bush (Senior Staff Quality Engineer)
Associated Items	From 720-00005 (Unreleased) to 720-00005 (1 - In Design)

CAMERA AGGREGATOR BOARD

Title		
Size A	Number	Revision
Date: 12/18/2025		Sheet of
File: C:\Users\..\Cover.SchDoc		Drawn By:

ECO-000193 12/29/2025 09:54:51 PM

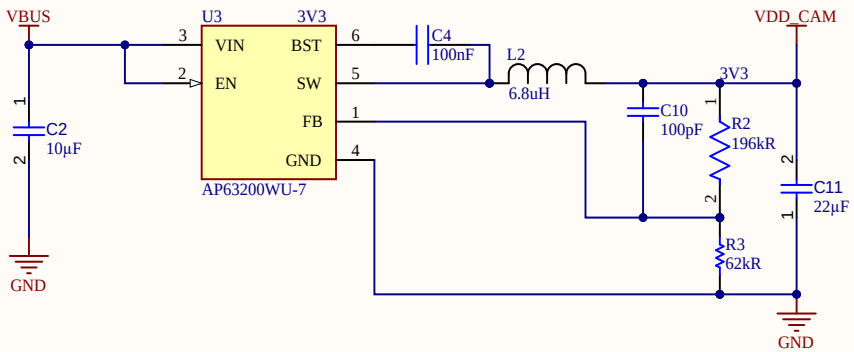

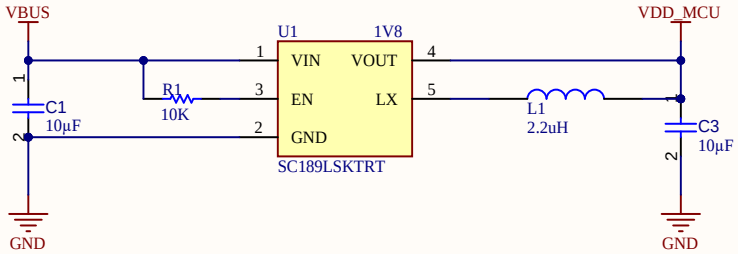

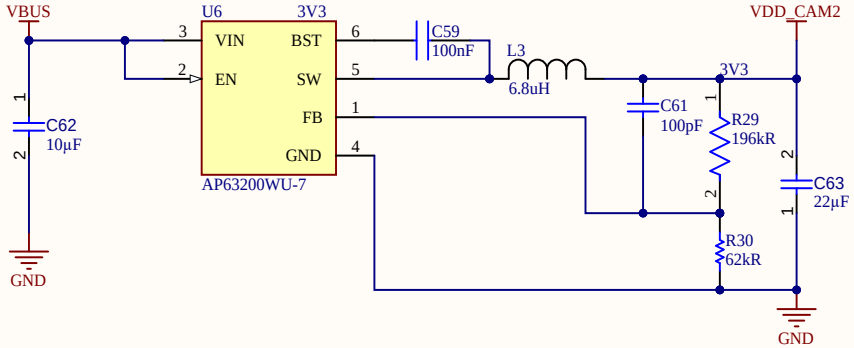

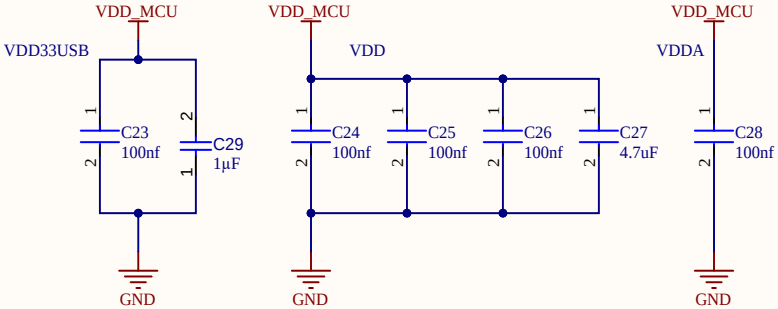

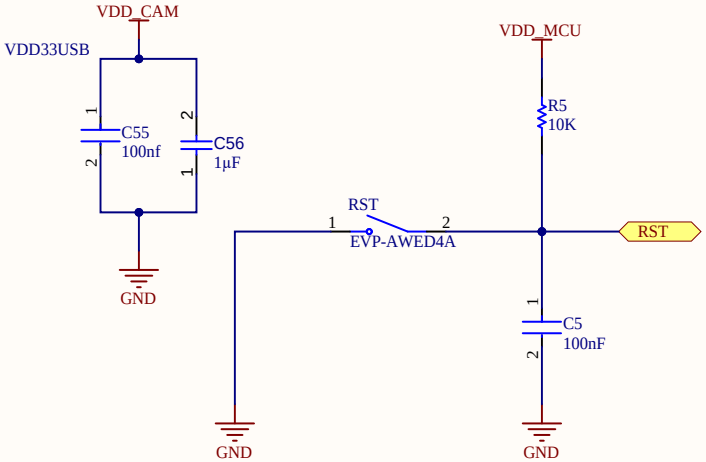

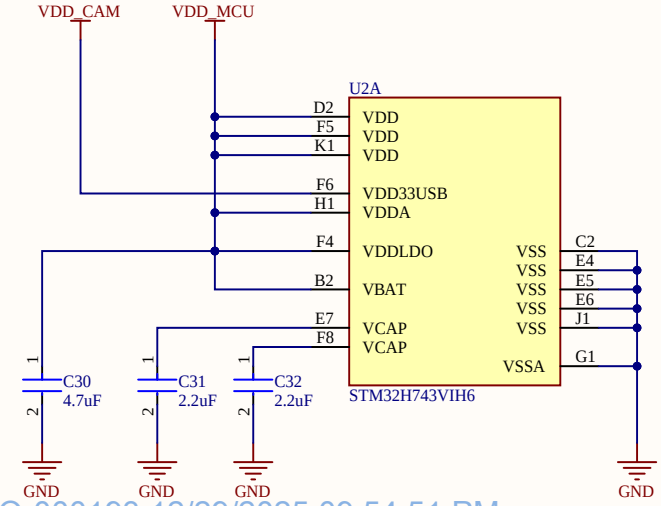

Title		
Size A	Number	Revision
Date: 12/18/2025		Sheet of
File: C:\Users\..\Power.SchDoc		Drawn By:

ECO-000193 12/29/2025 09:54:51 PM

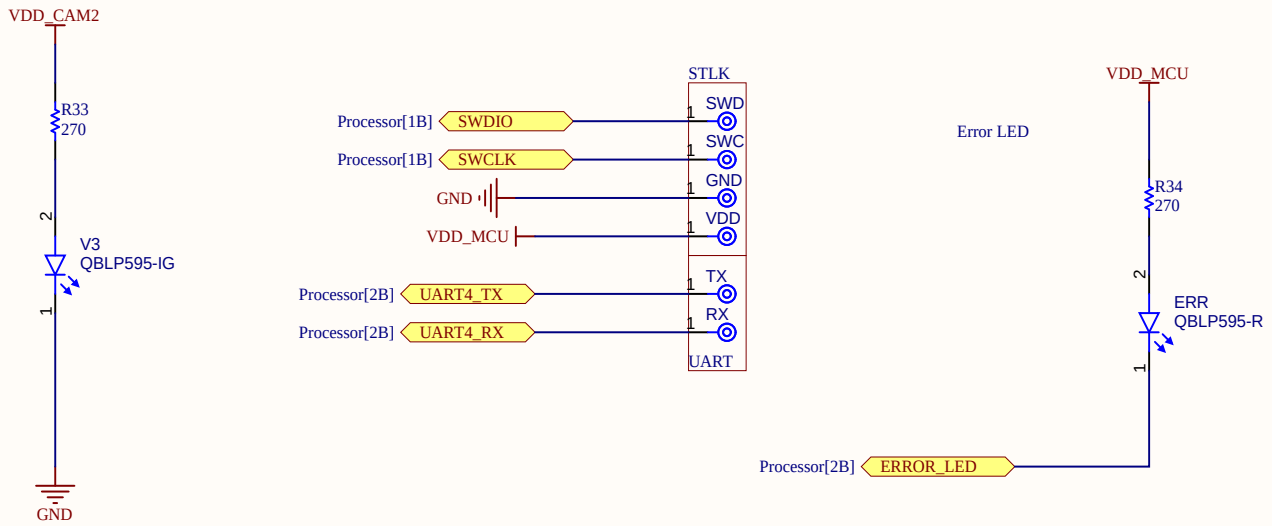

Title		
Size A	Number	Revision
Date: 12/18/2025		Sheet of
File: C:\Users\..\Indicators.SchDoc		Drawn By:

ECO-000193 12/29/2025 09:54:51 PM

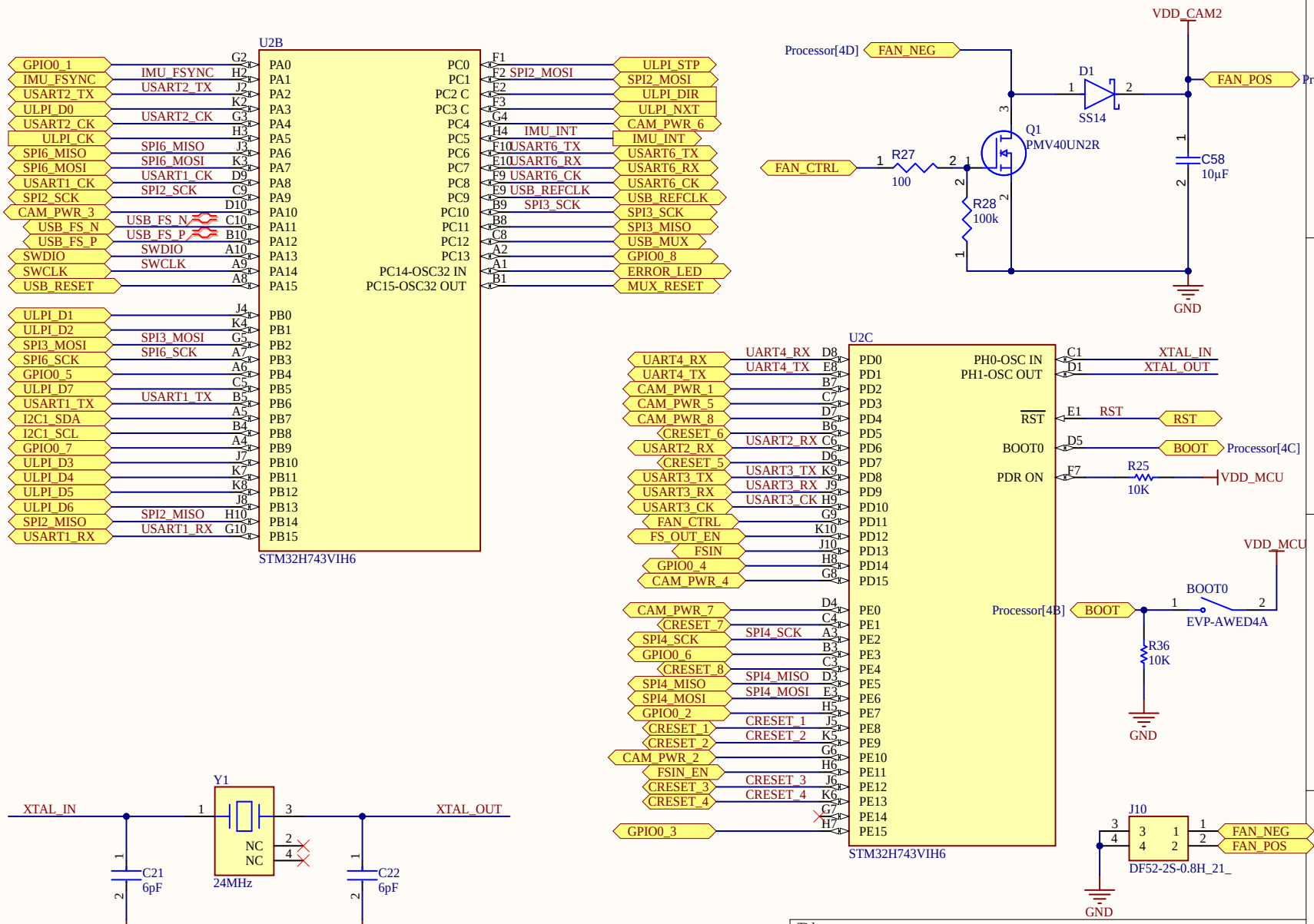

ECO-000193 12/29/2025 09:54:51 PM

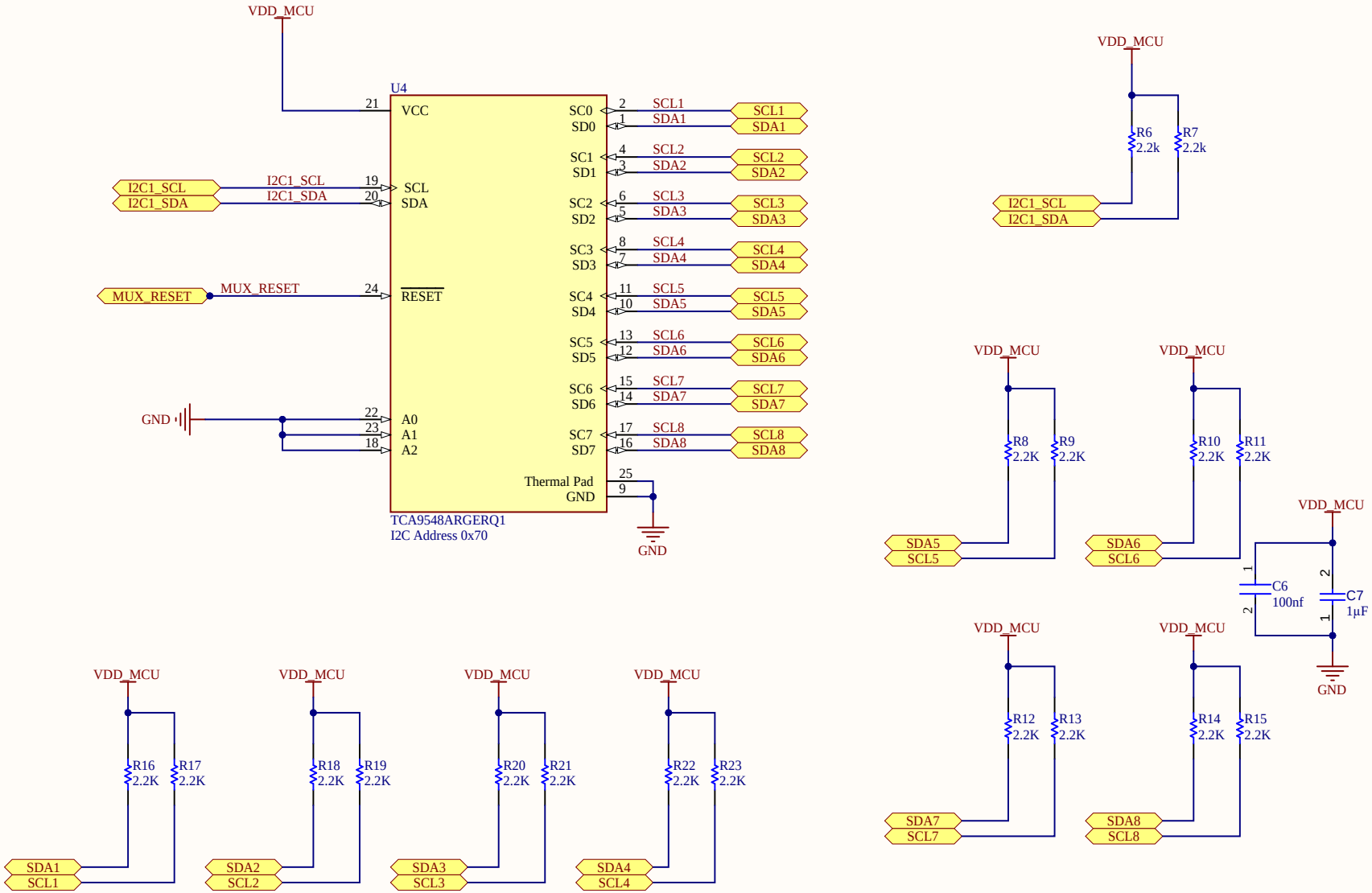

Title		
Size A	Number	Revision
Date: 12/18/2025		Sheet of
File: C:\Users\..\I2C_mux.SchDoc		Drawn By:

ECO-000193 12/29/2025 09:54:51 PM

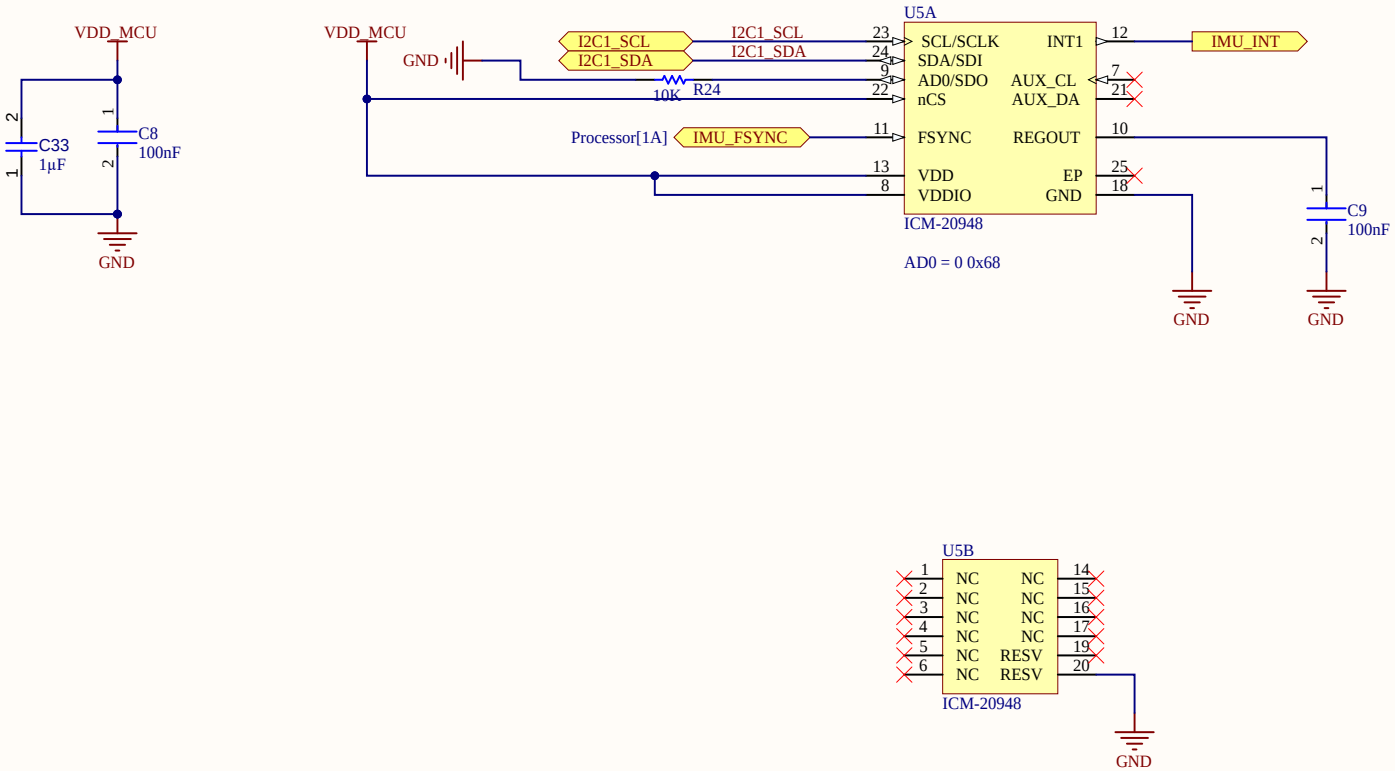

Title		
Size A	Number	Revision
Date: 12/18/2025		Sheet of
File: C:\Users\..\IMU.SchDoc		Drawn By:

ECO-000193 12/29/2025 09:54:51 PM

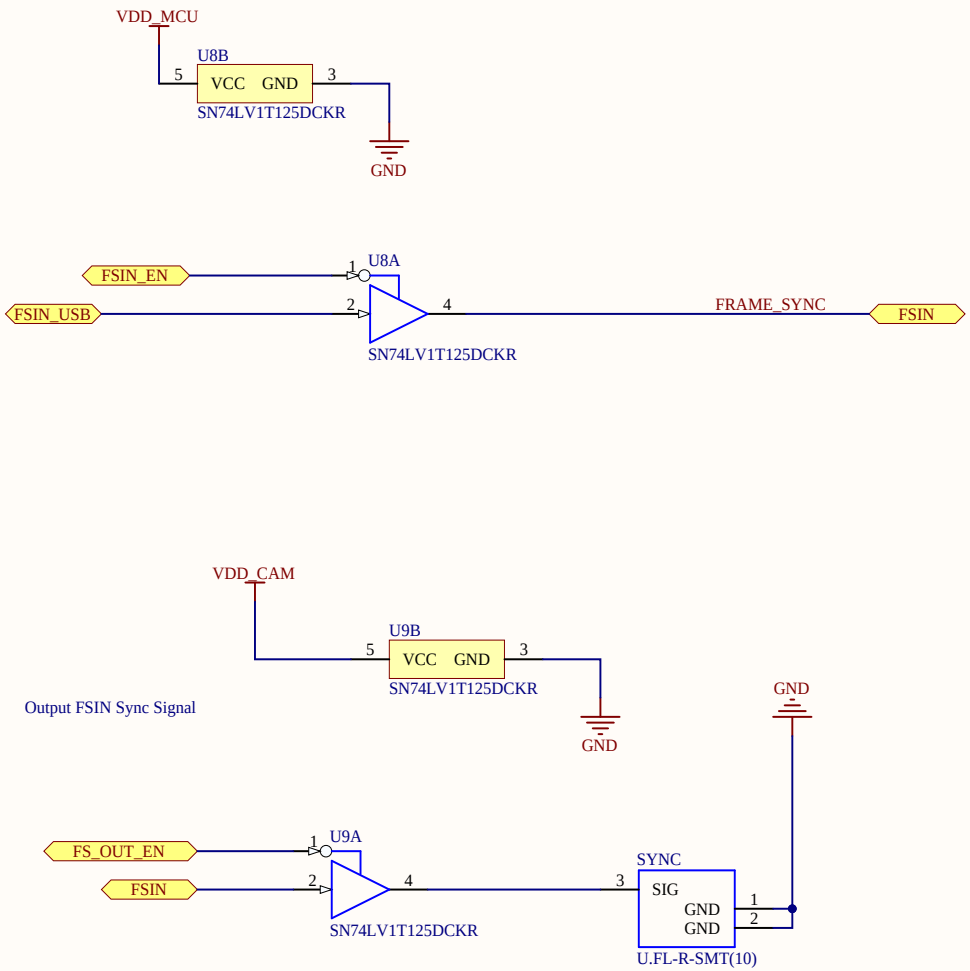

Title		
Size A	Number	Revision
Date: 12/18/2025		Sheet of
File: C:\Users\..\FrameSync.SchDoc		Drawn By:

ECO-000193 12/29/2025 09:54:51 PM

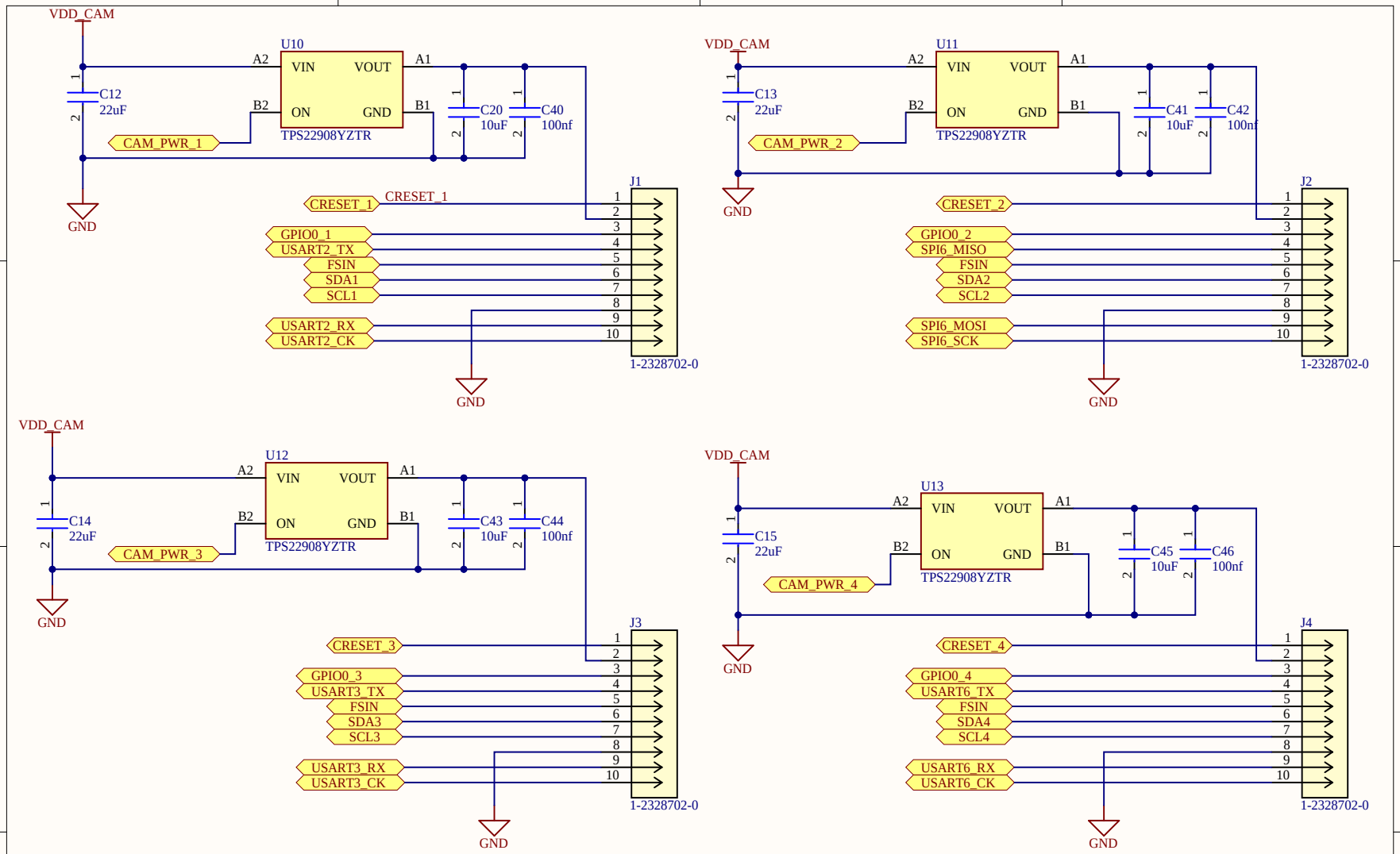

Title		
Size A	Number	Revision
Date: 12/18/2025		Sheet of
File: C:\Users\..\Connect.SchDoc		Drawn By:

ECO-000193 12/29/2025 09:54:51 PM

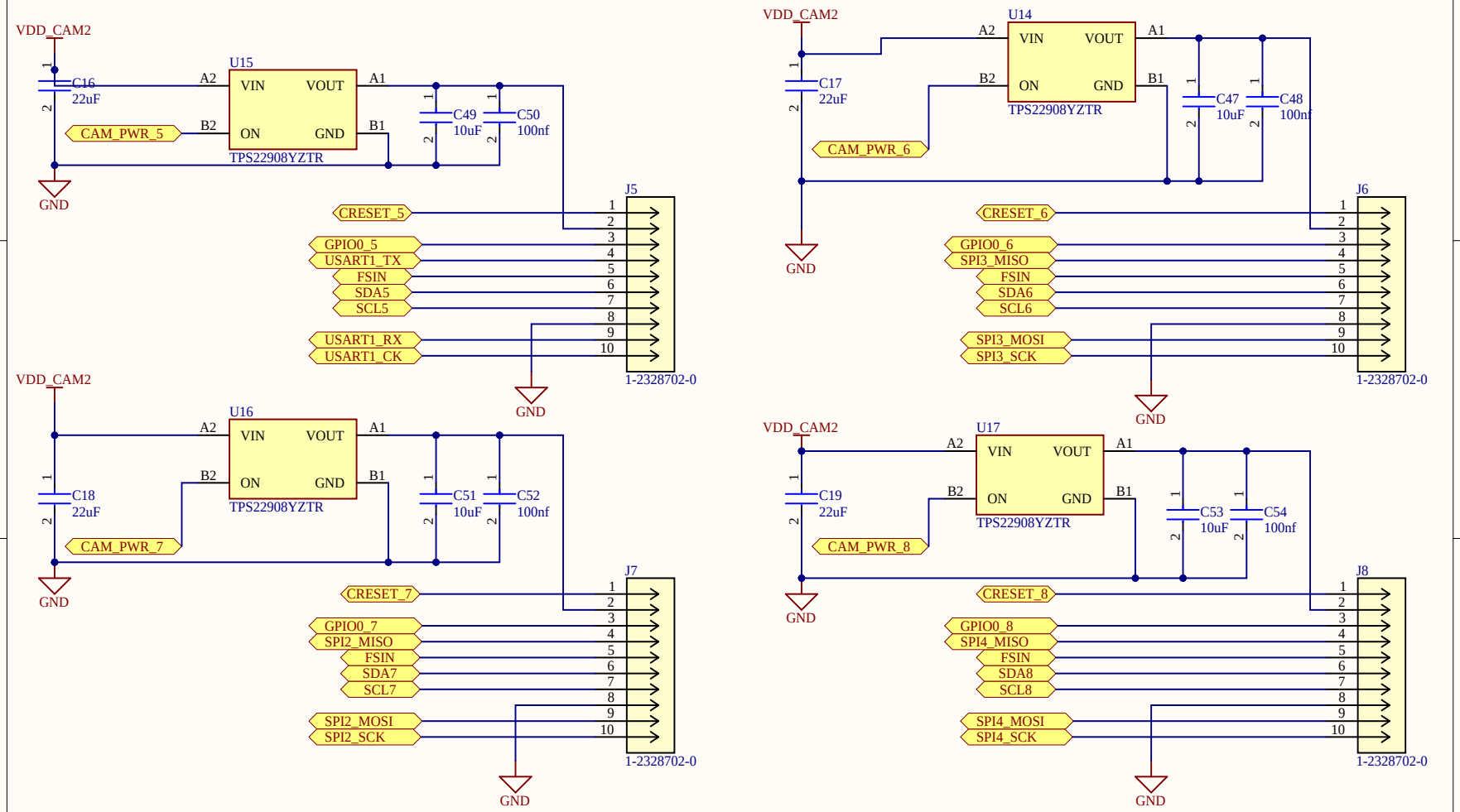

Title		
Size A	Number	Revision
Date: 12/18/2025		Sheet of
File: C:\Users\..\Connect_2.SchDoc		Drawn By:

ECO-000193 12/29/2025 09:54:51 PM

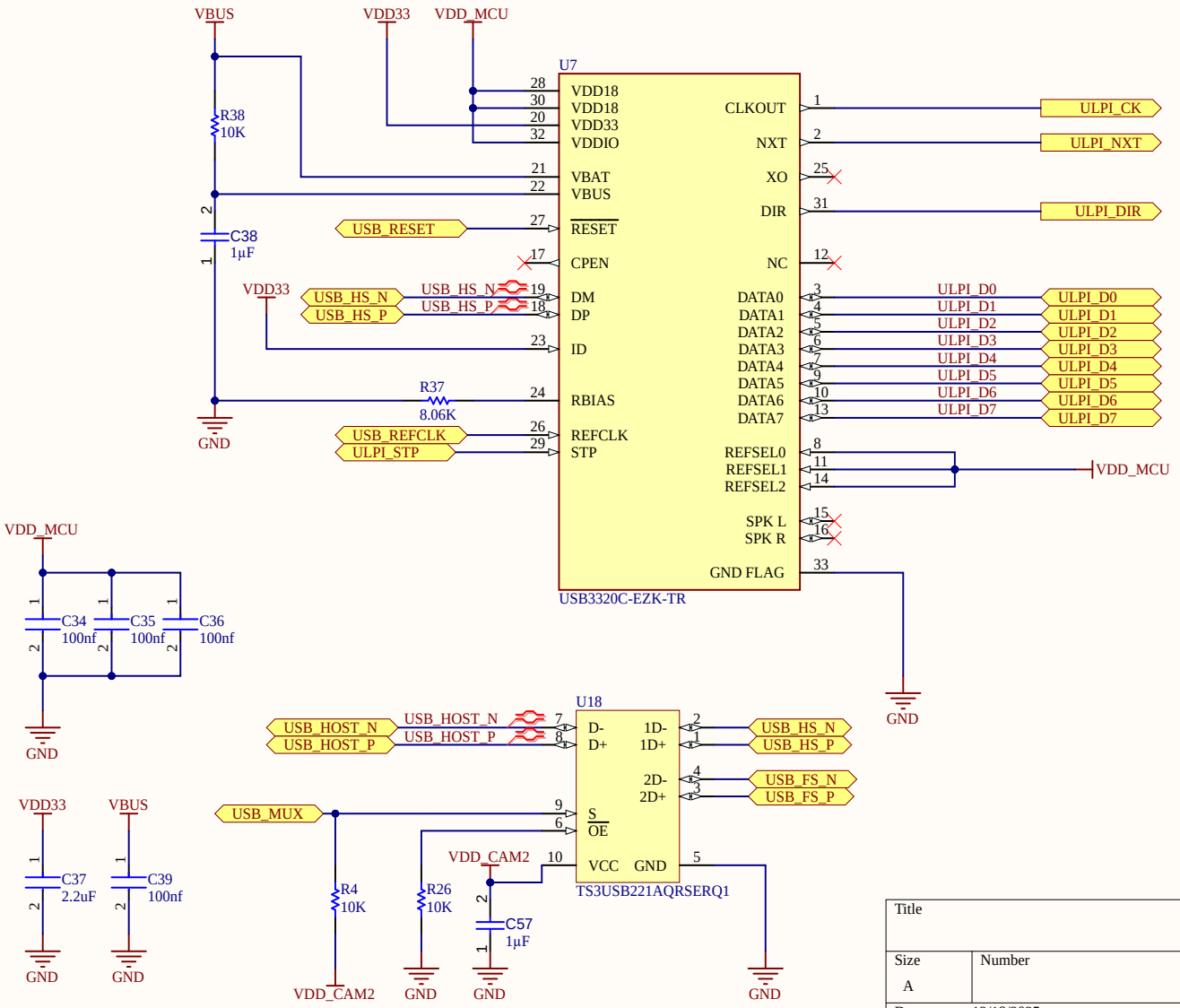

Title		
Size A	Number	Revision
Date: 12/18/2025		Sheet of
File: C:\Users\..\usb_phy.SchDoc		Drawn By:

ECO-000193 12/29/2025 09:54:51 PM

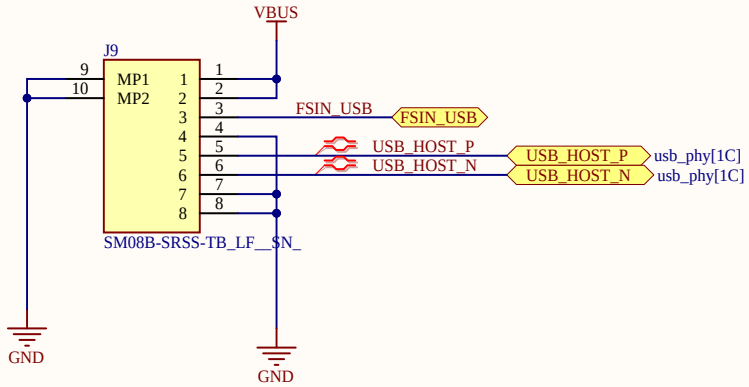

Mating connector: SHR-08V-S-B

Title		
Size A	Number	Revision
Date: 12/18/2025		Sheet of
File: C:\Users\..\USB.SchDoc		Drawn By:

ECO-000193 12/29/2025 09:54:51 PM