REVISIONS				
ZONE	REV.	DESCRIPTION	DATE	APPROVED
	01	INITIAL RELEASE	20230123	AH
A5	02	CORRECTED MINIMUM CHROME OPTICAL DENSITY. WAS 6.0, UPDATED TO 5.0.	20230203	AH

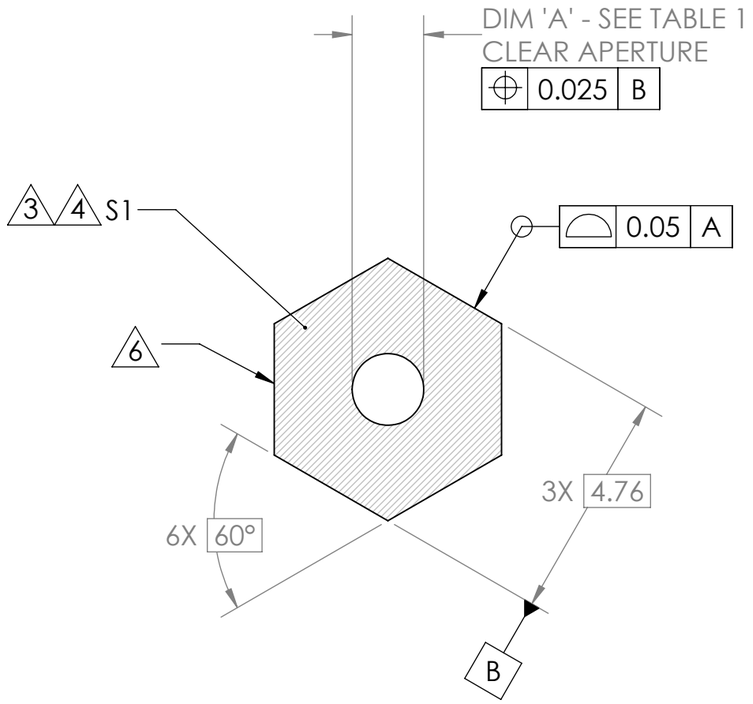

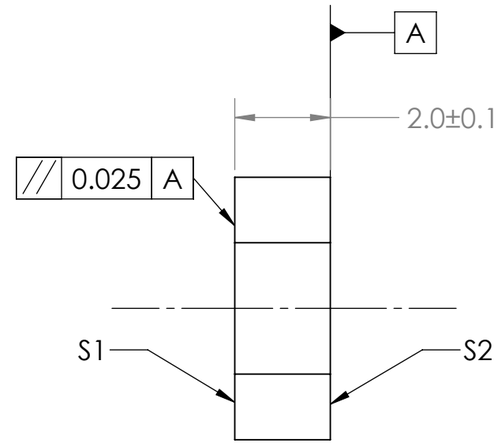

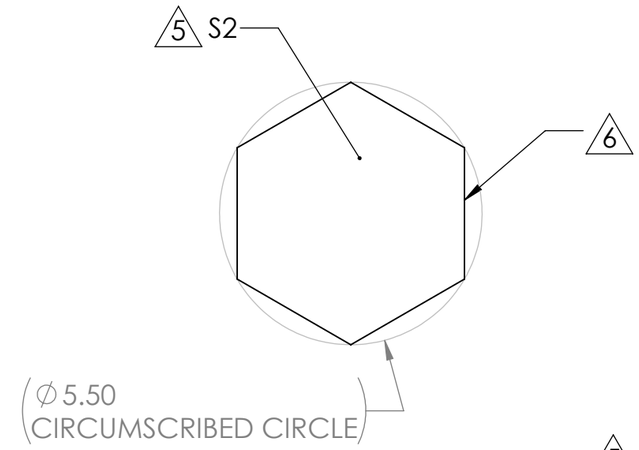

5

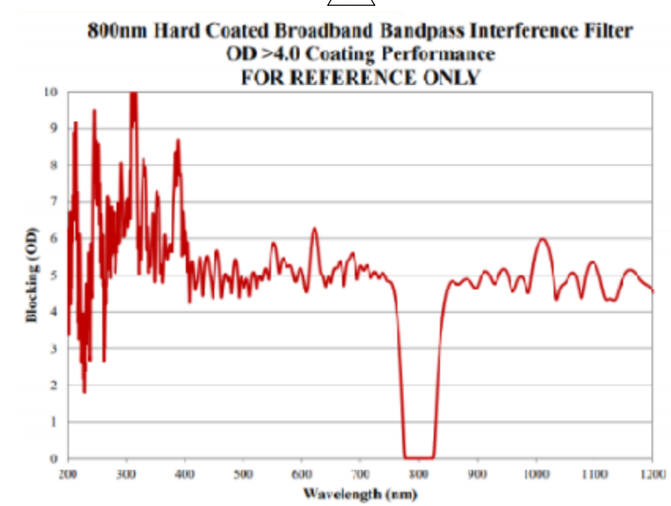

TABLE 1

PART NUMBER	DIM 'A'	NOTE
3000-0659-01	∅1.50 +/- 0.005	NEAR CAMERA CONFIGURATION
3000-0659-02	∅3.00 +/- 0.005	FAR CAMERA CONFIGURATION

NOTES: (UNLESS OTHERWISE SPECIFIED)

1. MATERIAL: OHARA SK-1300 (FUSED SILICA).
2. SURFACE QUALITY 60-40 ON S1 AND S2
3. PATTERNED BLUE REFLECTIVE CHROME COATING ON S1, OD ≥ 5.0. MAINTAIN UNCOATED CLEAR APERTURE AS INDICATED.
4. AFTER CHROME PATTERNING, APPLY 0.5 MICRON Si02 CAP LAYER TO S1.
5. APPLY OD4 BANDPASS TO S2. FILTER SHALL PASS 785 nm +/- 5 nm UP TO 31.5 DEGREES AOI. SEE SPECTRUM FOR REFERENCE. OPTICAL DENSITY TOLERANCE IS +/- 10%.
6. CHIP SPEC <0.05 AT EDGES OF S1 AND S2.
7. RoHS COMPLIANT

PROPRIETARY AND CONFIDENTIAL

THE INFORMATION CONTAINED IN THIS DRAWING IS THE SOLE PROPERTY OF OPENWATER. ANY REPRODUCTION IN PART OR AS A WHOLE WITHOUT THE WRITTEN PERMISSION OF ABOVE PARTIES IS PROHIBITED.

DIMENSIONAL TOLERANCES UNLESS OTHERWISE SPECIFIED:

INCHES:	X.XX	±0.01
	X.XXX	±0.005
MM:	X.X	±0.1
	X.XX	±0.05
ANGULAR:	X.X°	±0.5°
SURFACE:	63	

THIRD ANGLE PROJECTION

	NAME	DATE
CREATED BY	--	
CHECKED BY	--	
ENG APPR.		
MFG APPR.		
Q.A. APPR.		

OPENWATER
733 FRONT ST, STE C1A SAN FRANCISCO, CA 94111

TITLE: **WINDOW, CAMERA, HEXAGONAL**

MATERIAL: SEE NOTES

FINISH: SEE NOTES

SIZE	DWG. NO.	REV
B	3000-0659	02

DO NOT SCALE DRAWING | ☐ NOTES | △ CHANGES | SCALE: 8:1 | WEIGHT: 0.04g | SHEET 1 OF 1