REVISIONS				
ZONE	REV.	DESCRIPTION	DATE	APPROVED
	01	INITIAL RELEASE	20220901	AH

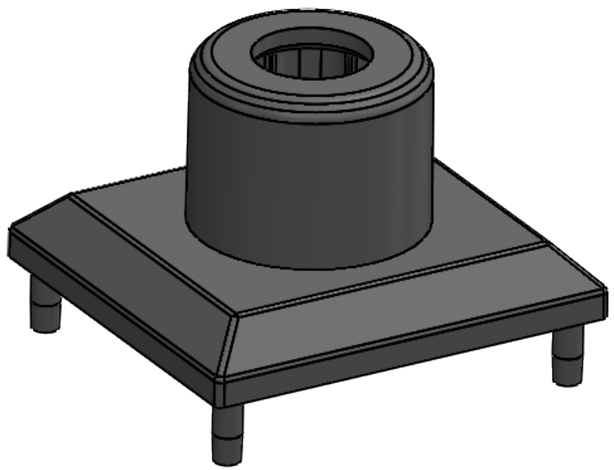

FOR REFERENCE ONLY
SCALE: NONE

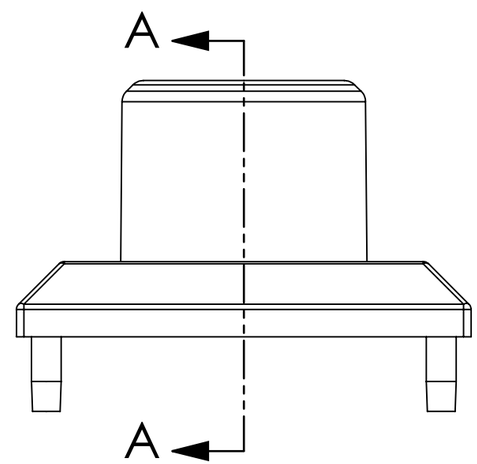

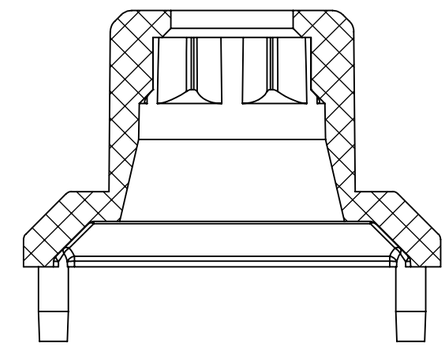

SECTION A-A

NOTES: (UNLESS OTHERWISE SPECIFIED)

1. 3D PRINT COMPONENT: MJF, NYLON PA 12 BLACK MATERIAL
2. DIMENSIONS SHOWN ARE FOR INSPECTION PURPOSES ONLY. USE MODEL 3D GEOMETRY FOR FABRICATION.

PROPRIETARY AND CONFIDENTIAL

THE INFORMATION CONTAINED IN THIS DRAWING IS THE SOLE PROPERTY OF OPENWATER. ANY REPRODUCTION IN PART OR AS A WHOLE WITHOUT THE WRITTEN PERMISSION OF ABOVE PARTIES IS PROHIBITED.

DIMENSIONAL TOLERANCES UNLESS OTHERWISE SPECIFIED:

INCHES:	X.XX	±0.01
	X.XXX	±0.005
MM:	X.X	±0.1
	X.XX	±0.05
ANGULAR:	X.X°	±0.5°
SURFACE:	63	

THIRD ANGLE PROJECTION

	NAME	DATE
CREATED BY	--	
CHECKED BY	--	
ENG APPR.		
MFG APPR.		
Q.A. APPR.		

MATERIAL SEE NOTES

FINISH

DO NOT SCALE DRAWING | ☐ NOTES | △ CHANGES

OPENWATER
733 FRONT ST, STE C1A SAN FRANCISCO, CA 94111

TITLE: **DETECTOR HOUSING, FAR**

SIZE	DWG. NO.	REV
B	3000-0591	01

SCALE: 5:1 | WEIGHT: 0.41g | SHEET 1 OF 1