REVISIONS				
ZONE	REV.	DESCRIPTION	DATE	APPROVED
	01	INITIAL RELEASE	20230206	AH

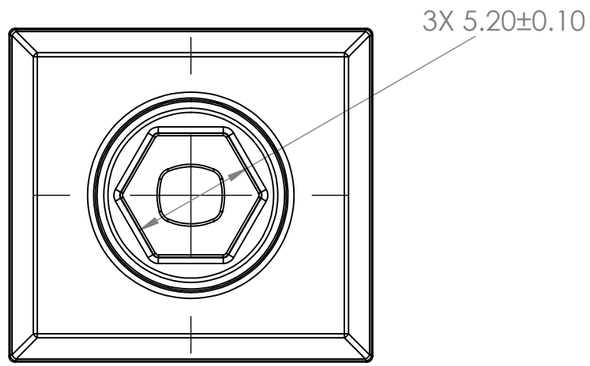

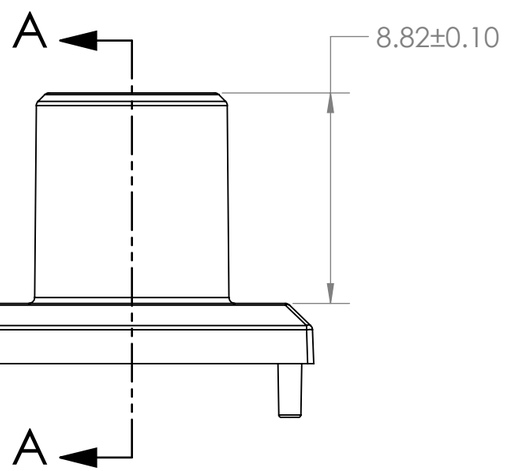

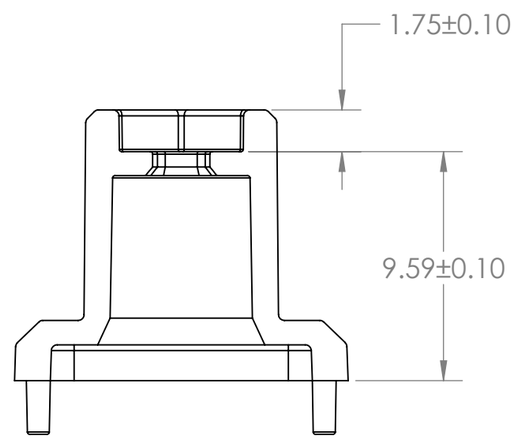

SECTION A-A

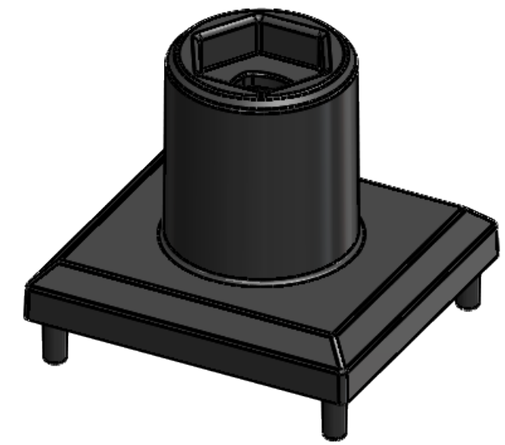

FOR REFERENCE ONLY
SCALE: NONE

NOTES: (UNLESS OTHERWISE SPECIFIED)

1. DIMENSIONS SHOWN ARE FOR INSPECTION PURPOSES ONLY. USE 3D MODEL FOR FABRICATION.

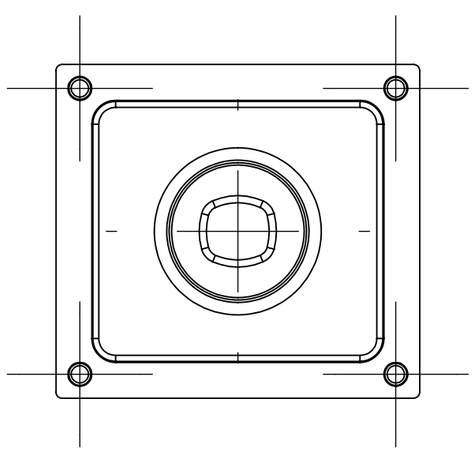

DIMENSIONAL TOLERANCES UNLESS OTHERWISE SPECIFIED:				NAME	DATE
INCHES:	X.XX	±0.01	CREATED BY	--	
	X.XXX	±0.005			
MM:	X.X	±0.1	CHECKED BY	--	
	X.XX	±0.05			
ANGULAR:	X.X°	±0.5°	ENG APPR.		
SURFACE:	63		MFG APPR.		
	THIRD ANGLE PROJECTION		Q.A. APPR.		

OPENWATER
733 FRONT ST, STE C1A SAN FRANCISCO, CA 94111

TITLE:
DETECTOR HOUSING, NEAR, GEN 2.5

MATERIAL: LUSTRAN 348 ABS, STANDARD BLACK

FINISH

SIZE	DWG. NO.	REV
B	3000-0667	01

DO NOT SCALE DRAWING | ☐ NOTES | △ CHANGES | SCALE: 4:1 | WEIGHT: 1.27g | SHEET 1 OF 1

PROPRIETARY AND CONFIDENTIAL

THE INFORMATION CONTAINED IN THIS DRAWING IS THE SOLE PROPERTY OF OPENWATER. ANY REPRODUCTION IN PART OR AS A WHOLE WITHOUT THE WRITTEN PERMISSION OF ABOVE PARTIES IS PROHIBITED.