REVISIONS				
ZONE	REV.	DESCRIPTION	DATE	APPROVED
	01	INITIAL RELEASE	20220907	AH
	02	SEE 3000-0594 DWG FOR DETAIL	20220907	AH

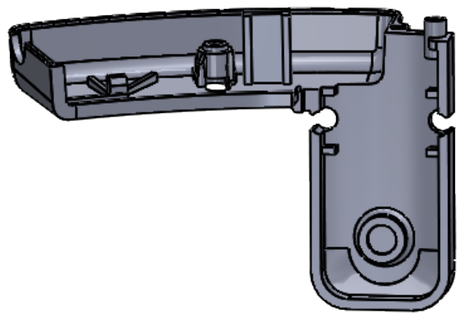

FOR REFERENCE ONLY
SCALE: NONE

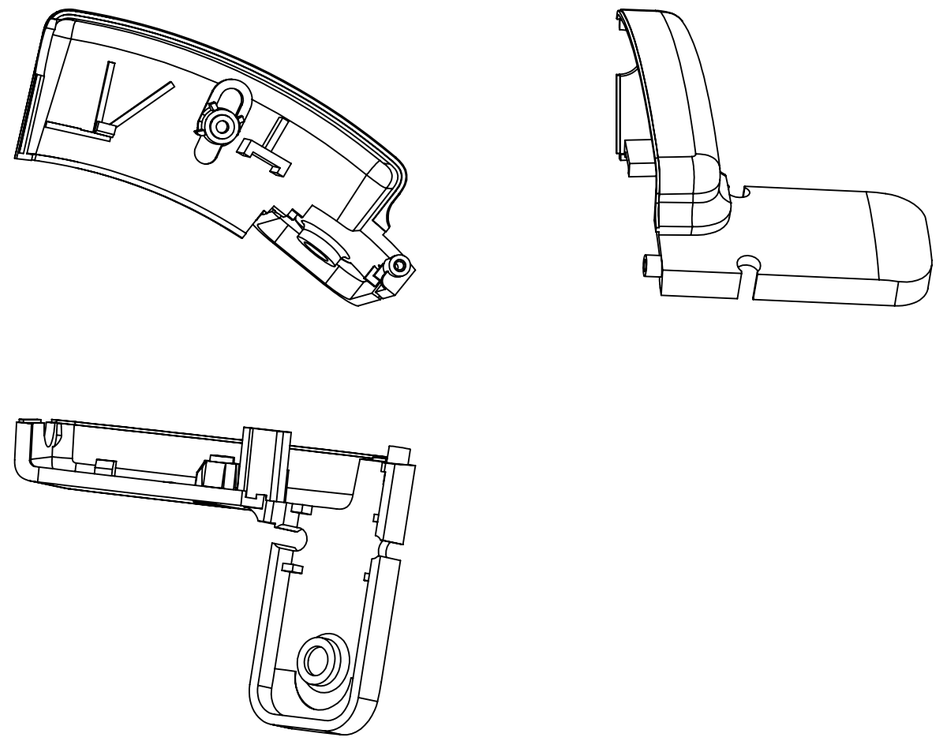

NOTES: (UNLESS OTHERWISE SPECIFIED)

1. DIMENSIONS ARE FOR INSPECTION PURPOSES ONLY. ALL FEATURES ARE TO BE GENERATED USING 3D CAD MODEL 3000-0596.
2. 3D PRINT IN 1000-0086 MJF NYLON 12, DYED BLACK.
3. THIS IS A MIRROR IMAGE PART IS DERIVED FROM 3000-0594.

PROPRIETARY AND CONFIDENTIAL

THE INFORMATION CONTAINED IN THIS DRAWING IS THE SOLE PROPERTY OF OPENWATER. ANY REPRODUCTION IN PART OR AS A WHOLE WITHOUT THE WRITTEN PERMISSION OF ABOVE PARTIES IS PROHIBITED.

DIMENSIONAL TOLERANCES UNLESS OTHERWISE SPECIFIED:

INCHES:	X.XX	±0.01
	X.XXX	±0.005
MM:	X.X	±0.1
	X.XX	±0.05
ANGULAR:	X.X°	±0.5°
SURFACE:	63	

THIRD ANGLE PROJECTION

	NAME	DATE
CREATED BY	--	
CHECKED BY	--	
ENG APPR.		
MFG APPR.		
Q.A. APPR.		

MATERIAL SEE NOTES

FINISH

DO NOT SCALE DRAWING | ☐ NOTES | △ CHANGES

OPENWATER
733 FRONT ST, STE C1A SAN FRANCISCO, CA 94111

TITLE:
MODULE HOUSING, RH, ROUND TUBE STOP DESIGN

SIZE	DWG. NO.	REV
B	3000-0596	02

SCALE: 1:1 | WEIGHT: 6.93g | SHEET 1 OF 1