ITEM NO.	PART NUMBER	DESCRIPTION	QTY.
1	XT66-200-Solidworks		1
2	XT66P1-Solidworks		1
3	XT66P2-Solidworks		1
4	XT66C1-Solidworks		1
5	3000-0617	PHANTOM, GEN 2 HEADSET	1
6	HKTS-9_64-Solidworks		1
7			1
8	3000-0811	DETECTOR BRACKET, STATIC PHANTOM TESTER	1
9	F240APC-B-Solidworks		1
10	91251A194	Black-Oxide Alloy Steel Socket Head Screw	4
11	3000-0810	ALIGNMENT PLATE, STATIC PHANTOM TESTER	2

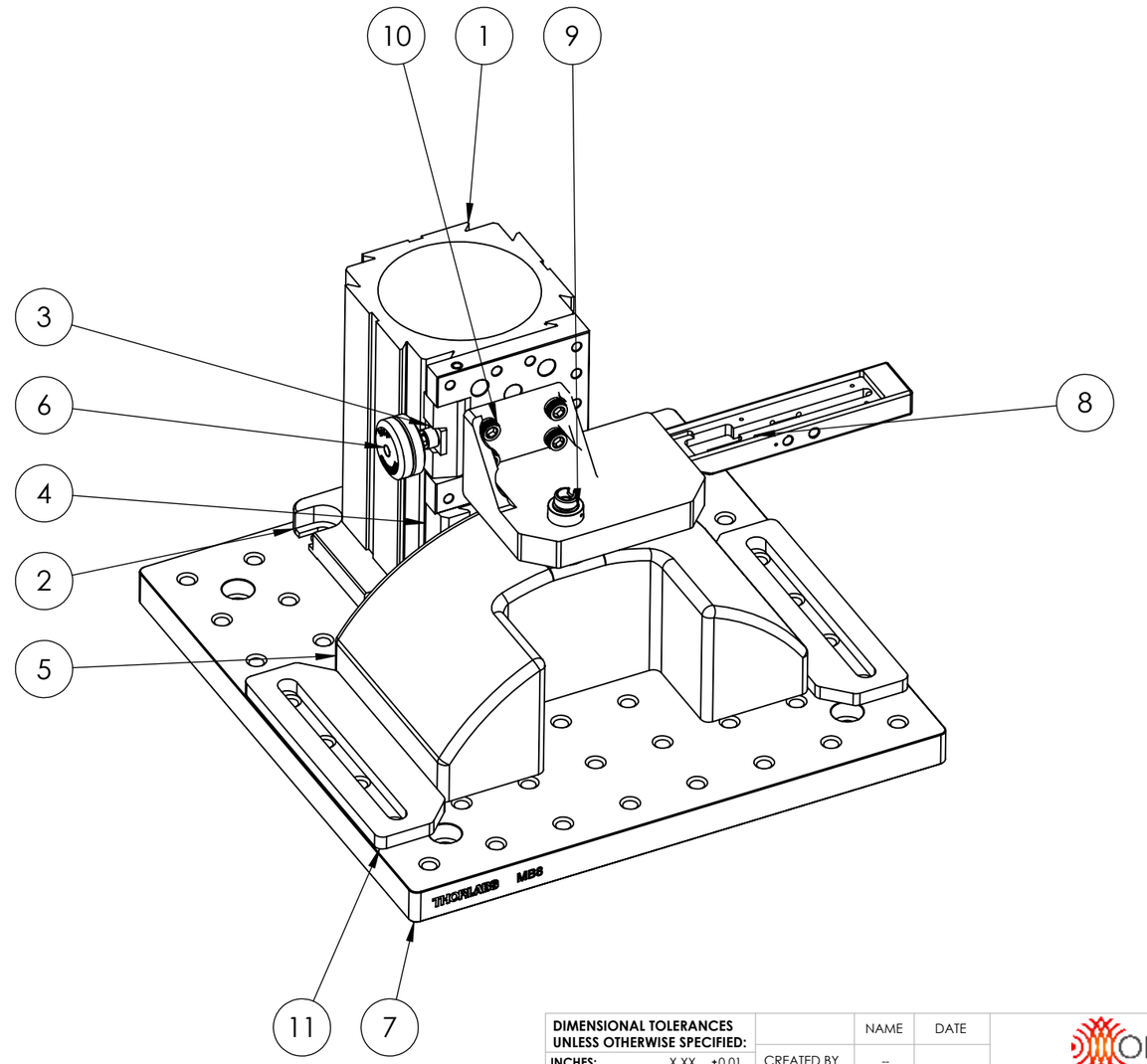

DIMENSIONAL TOLERANCES UNLESS OTHERWISE SPECIFIED:

INCHES:	X.XX	±0.01
	X.XXX	±0.005
MM:	X.X	±0.1
	X.XX	±0.05
ANGULAR:	X.X°	±0.5°
SURFACE:	63	

THIRD ANGLE PROJECTION

	NAME	DATE
CREATED BY	--	
CHECKED BY	--	
ENG APPR.		
MFG APPR.		
Q.A. APPR.		

MATERIAL

FINISH

PROPRIETARY AND CONFIDENTIAL

THE INFORMATION CONTAINED IN THIS DRAWING IS THE SOLE PROPERTY OF OPENWATER. ANY REPRODUCTION IN PART OR AS A WHOLE WITHOUT THE WRITTEN PERMISSION OF ABOVE PARTIES IS PROHIBITED.

OPENWATER
733 FRONT ST, STE C1A SAN FRANCISCO, CA 94111

TITLE:
STATIC PHANTOM TEST ASSEMBLY

SIZE	DWG. NO.	REV
B	7000-0280	

DO NOT SCALE DRAWING | ☐ NOTES | △ CHANGES | SCALE: 1:2 | WEIGHT: g | SHEET 1 OF 1