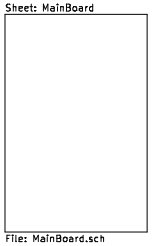
Sheet: MainBoard
File: MainBoard.sch

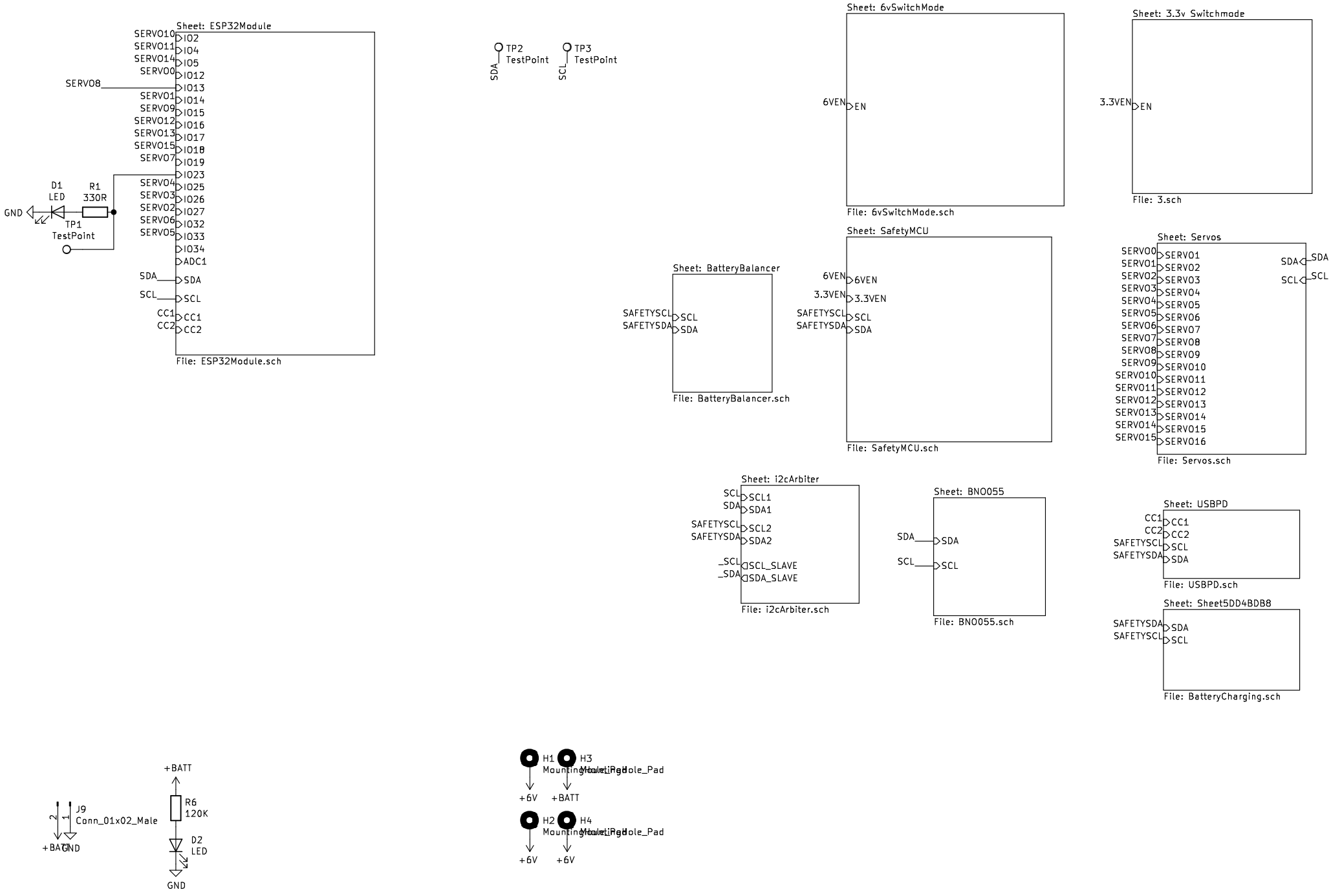
Sheet: ESP32Module
SERVO10
SERVO11
SERVO14
SERVO0
SERVO8
SERVO1
SERVO9
SERVO12
SERVO13
SERVO15
SERVO7
SERVO4
SERVO3
SERVO2
SERVO6
SERVO5
IO2
IO4
IO5
IO12
IO13
IO14
IO15
IO16
IO17
IO18
IO19
IO23
IO25
IO26
IO27
IO32
IO33
IO34
ADC1
SDA
SCL
CC1
CC2
File: ESP32Module.sch
D1
LED
R1
330R
GND
TP1
TestPoint
TP2
TestPoint
SDA
TP3
TestPoint
SCL
Sheet: 6vSwitchMode
6VEN
EN
File: 6vSwitchMode.sch
Sheet: 3.3v Switchmode
3.3VEN
EN
File: 3.sch
Sheet: BatteryBalancer
SAFETYSCL
SAFETYSDA
SCL
SDA
File: BatteryBalancer.sch
Sheet: SafetyMCU
6VEN
3.3VEN
SAFETYSCL
SAFETYSDA
SCL
SDA
File: SafetyMCU.sch
Sheet: Servos
SERVO0
SERVO1
SERVO2
SERVO3
SERVO4
SERVO5
SERVO6
SERVO7
SERVO8
SERVO9
SERVO10
SERVO11
SERVO12
SERVO13
SERVO14
SERVO15
SERVO1
SERVO2
SERVO3
SERVO4
SERVO5
SERVO6
SERVO7
SERVO8
SERVO9
SERVO10
SERVO11
SERVO12
SERVO13
SERVO14
SERVO15
SERVO16
SDA
SCL
File: Servos.sch
Sheet: i2cArbiter
SCL
SDA
SAFETYSCL
SAFETYSDA
_SCL
_SDA
SCL1
SDA1
SCL2
SDA2
SCL_SLAVE
SDA_SLAVE
File: i2cArbiter.sch
Sheet: BNO055
SDA
SCL
SDA
SCL
File: BNO055.sch
Sheet: USBPD
CC1
CC2
SAFETYSCL
SAFETYSDA
CC1
CC2
SCL
SDA
File: USBPD.sch
Sheet: Sheet5DD4BDB8
SAFETYSDA
SAFETYSCL
SDA
SCL
File: BatteryCharging.sch
+BATT
J9
Conn_01x02_Male
2
1
+BATT
GND
R6
120K
D2
LED
GND
H1
H3
H2
H4
MountingHole_Pad
+6V
+BATT
+6V
+6V

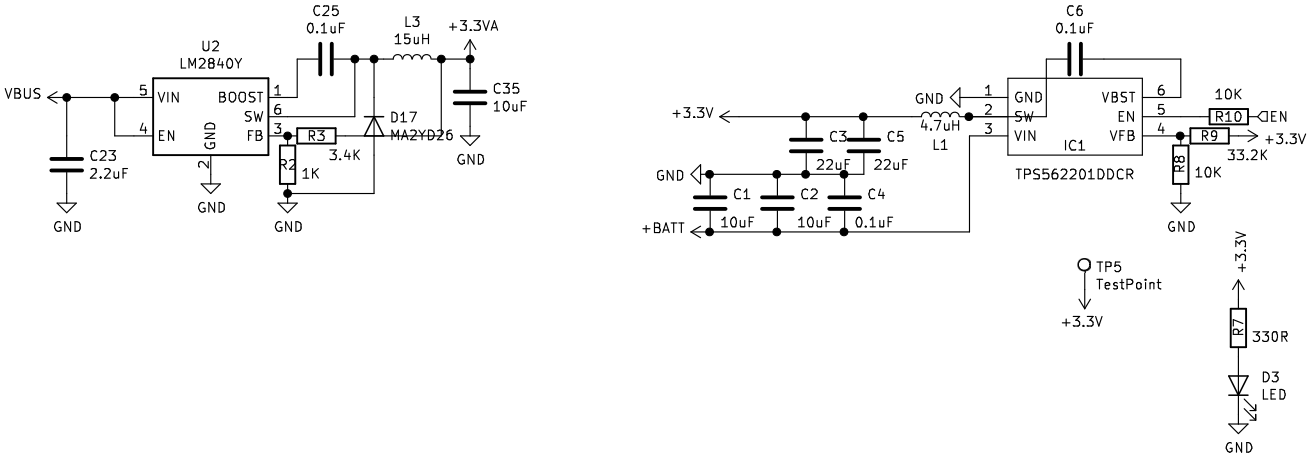
U2
LM2840Y
VIN
BOOST
SW
FB
EN
GND
C25
0.1uF
L3
15uH
+3.3VA
C35
10uF
VBUS
C23
2.2uF
R3
3.4K
R2
1K
D17
MA2YD26
C6
0.1uF
+3.3V
GND
4.7uH
L1
C3
22uF
C5
22uF
C1
10uF
C2
10uF
C4
0.1uF
+BATT
IC1
TPS562201DDCR
VBST
EN
VFB
10K
R10
EN
R9
33.2K
R8
10K
TP5
TestPoint
R7
330R
D3
LED

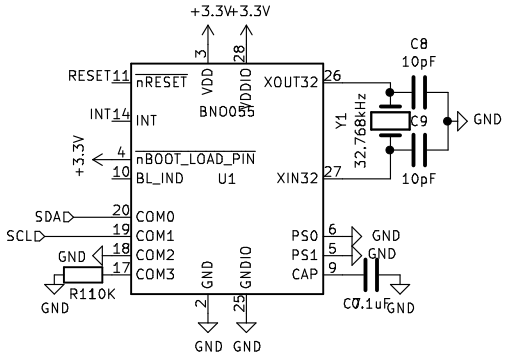
+3.3V
+3.3V
3
28
VDD
VDDIO
BNO055
U1
RESET
11
nRESET
INT
14
INT
+3.3V
4
nBOOT_LOAD_PIN
10
BL_IND
SDA
20
COM0
SCL
19
COM1
GND
18
COM2
17
COM3
R1
10K
GND
GND
2
25
GND
GNDIO
GND
XOUT32
26
XIN32
27
C8
10pF
Y1
32.768kHz
C9
10pF
GND
PS0
6
GND
PS1
5
GND
CAP
9
C10
0.1uF
GND

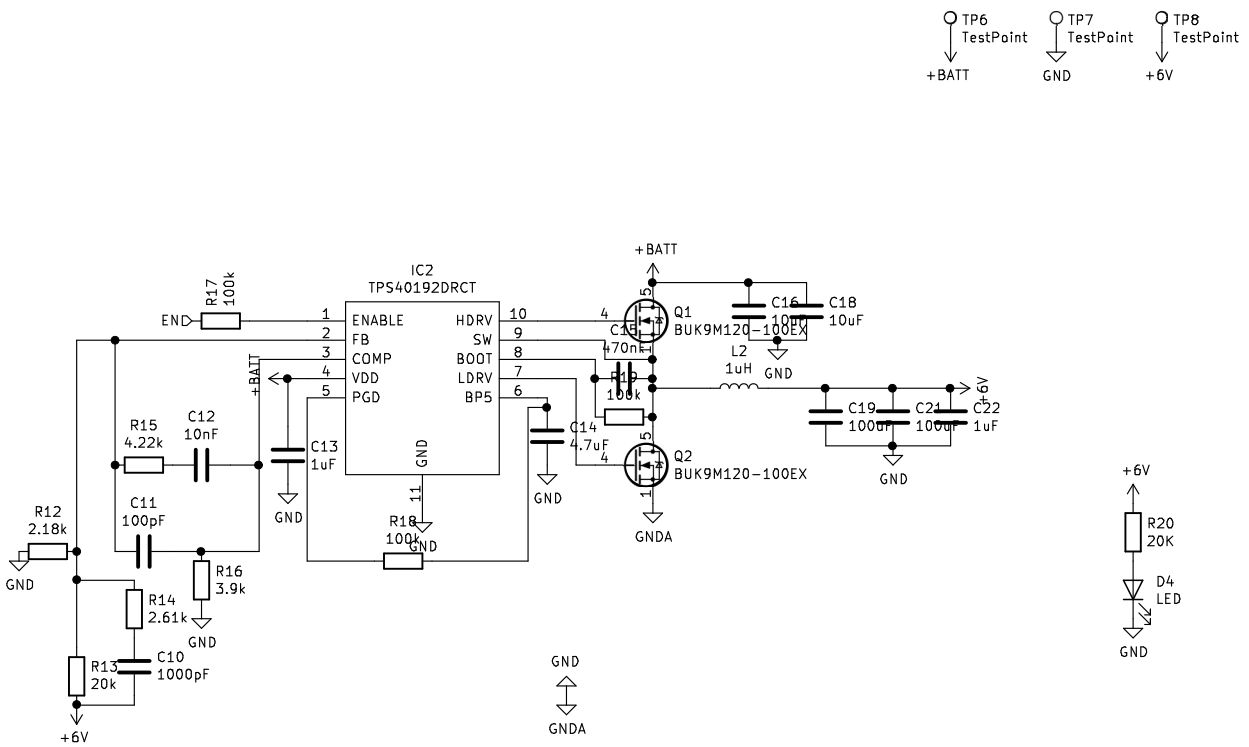
TP6
TestPoint
+BATT
TP7
TestPoint
GND
TP8
TestPoint
+6V
IC2
TPS40192DRCT
ENABLE
FB
COMP
VDD
PGD
HDRV
SW
BOOT
LDRV
BP5
R17
100k
END
R15
4.22k
C12
10nF
C13
1uF
R12
2.18k
C11
100pF
R16
3.9k
R14
2.61k
C10
1000pF
R13
20k
+6V
GND
+BATT
R18
100k
C14
4.7uF
Q1
BUK9M120-100EX
Q2
BUK9M120-100EX
C15
470nF
R19
100k
C16
10uF
C18
10uF
L2
1uH
C19
100uF
C21
100uF
C22
1uF
GNDA
R20
20K
D4
LED

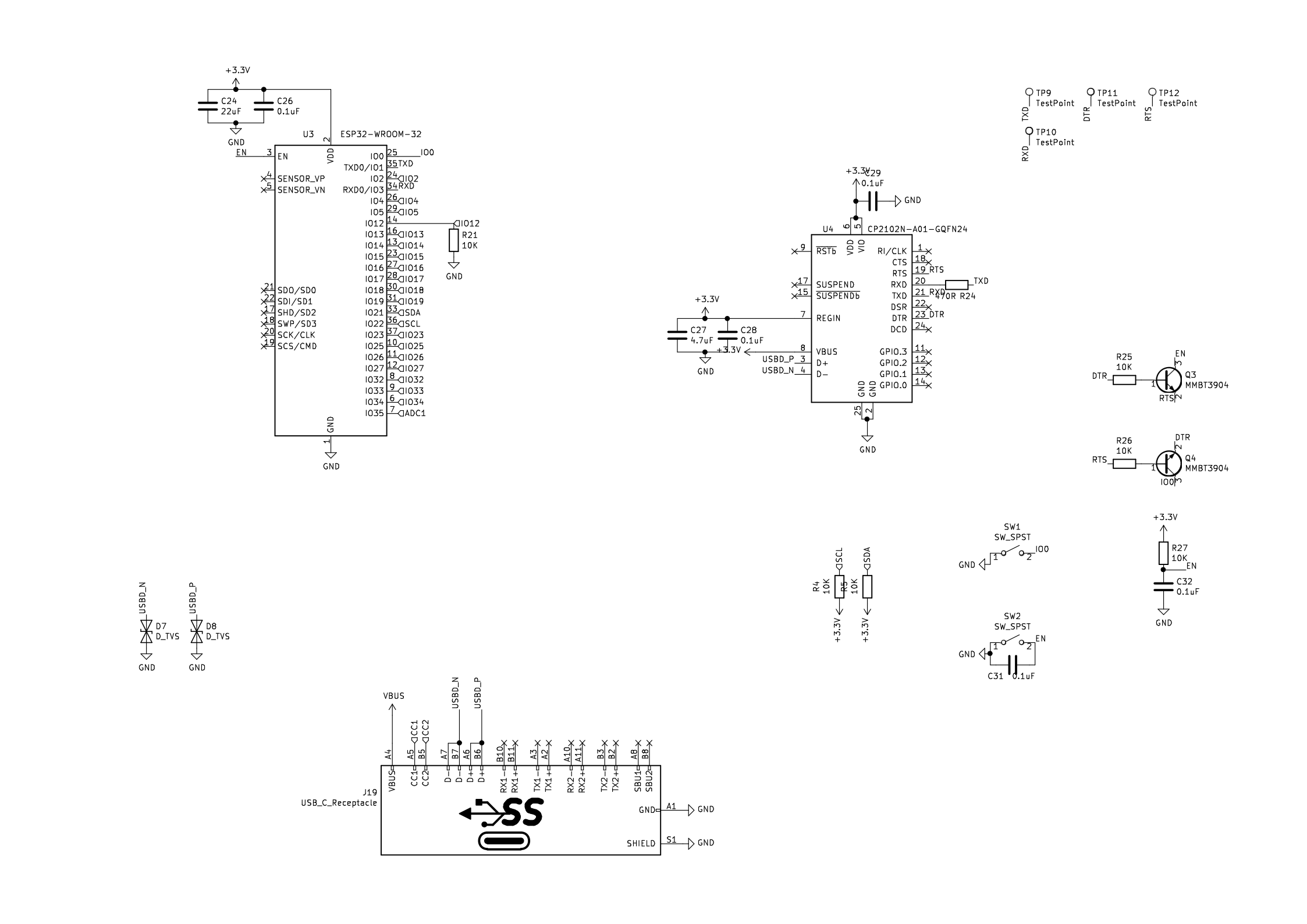
+3.3V
C24
22uF
C26
0.1uF
GND
U3
ESP32-WROOM-32
EN
SENSOR_VP
SENSOR_VN
SDO/SD0
SDI/SD1
SHD/SD2
SWP/SD3
SCK/CLK
SCS/CMD
VDD
GND
IO0
TXD0/IO1
IO2
RXD0/IO3
IO4
IO5
IO12
IO13
IO14
IO15
IO16
IO17
IO18
IO19
IO21
IO22
IO23
IO25
IO26
IO27
IO32
IO33
IO34
IO35
SDA
SCL
ADC1
R21
10K
TP9
TestPoint
TXD
TP11
DTR
TP12
RTS
TP10
RXD
C29
0.1uF
U4
CP2102N-A01-GQFN24
RSTb
VDD
VIO
SUSPEND
SUSPENDb
REGIN
VBUS
D+
D-
USBD_P
USBD_N
RI/CLK
CTS
RTS
RXD
TXD
DSR
DTR
DCD
GPIO.3
GPIO.2
GPIO.1
GPIO.0
470R R24
C27
4.7uF
C28
0.1uF
R25
10K
Q3
MMBT3904
R26
10K
Q4
MMBT3904
D7
D_TVS
D8
D_TVS
R4
10K
R5
10K
SW1
SW_SPST
SW2
SW_SPST
EN
R27
10K
C32
0.1uF
C31
0.1uF
J19
USB_C_Receptacle
VBUS
CC1
CC2
D-
D+
RX1-
RX1+
TX1-
TX1+
RX2-
RX2+
TX2-
TX2+
SBU1
SBU2
A1
S1
SHIELD

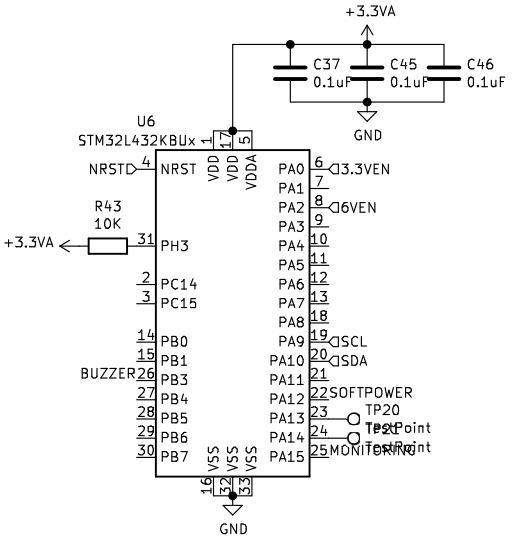
+3.3VA
C37
0.1uF
C45
0.1uF
C46
0.1uF
GND
U6
STM32L432KBUx
NRST
VDD
VDD
VDDA
PA0
3.3VEN
PA2
6VEN
R43
10K
+3.3VA
PH3
PC14
PC15
PB0
PB1
BUZZER
PB3
PB4
PB5
PB6
PB7
PA9
SCL
PA10
SDA
PA12
SOFTPOWER
PA13
TP20
PA14
TP21
PA15
MONITORING
VSS
VSS
VSS
GND

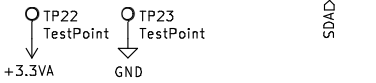
TP22
TestPoint
TP23
TestPoint
+3.3VA
GND

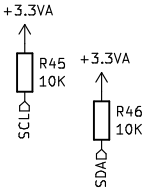
+3.3VA
R45
10K
SCL
+3.3VA
R46
10K
SDA

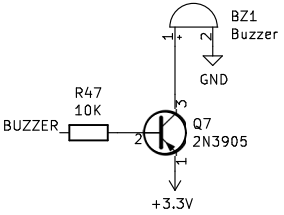
BZ1
Buzzer
GND
R47
10K
BUZZER
Q7
2N3905
+3.3V

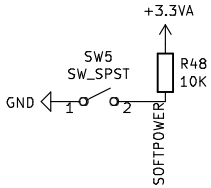
+3.3VA
SW5
SW_SPST
R48
10K
GND
SOFTPOWER

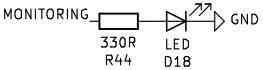
MONITORING
330R
R44
LED
D18
GND

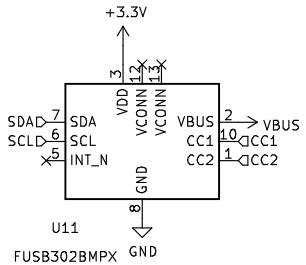
+3.3V
3
VDD
12
VCONN
13
VCONN
SDA
7
SDA
SCL
6
SCL
5
INT_N
VBUS
2
VBUS
CC1
10
CC1
CC2
1
CC2
GND
8
GND
U11
FUSB302BMPX

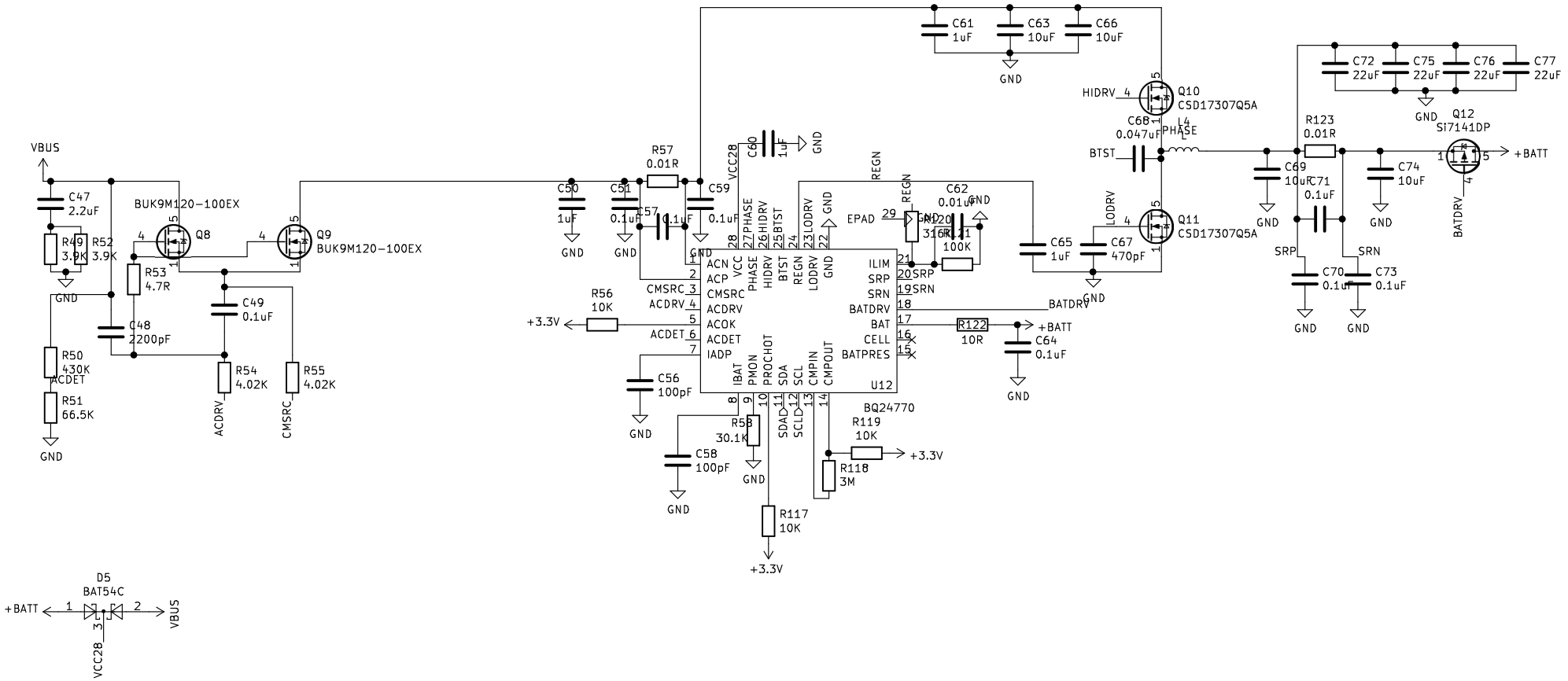

VBUS
C47
2.2uF
R49
3.9K
R52
3.9K
GND
BUK9M120-100EX
Q8
R53
4.7R
C48
2200pF
R50
430K
ACDET
R51
66.5K
C49
0.1uF
R54
4.02K
ACDRV
R55
4.02K
CMSRC
Q9
BUK9M120-100EX
C50
1uF
C51
0.1uF
R57
0.01R
C57
0.1uF
C59
0.1uF
VCC28
C60
1uF
R56
10K
+3.3V
C56
100pF
C58
100pF
R58
30.1K
R117
10K
R118
3M
R119
10K
U12
BQ24770
ACN
ACP
CMSRC
ACDRV
ACOK
ACDET
IADP
VCC
PHASE
HIDRV
BTST
REGN
LODRV
GND
ILIM
SRP
SRN
BATDRV
BAT
CELL
BATPRES
IBAT
PMON
PROCHOT
SDA
SCL
CMPIN
CMPOUT
EPAD
R120
316K
R121
100K
C62
0.01uF
C65
1uF
C67
470pF
R122
10R
C64
0.1uF
BATDRV
C61
1uF
C63
10uF
C66
10uF
HIDRV
Q10
CSD17307Q5A
C68
0.047uF
L4
PHASE
BTST
LODRV
Q11
CSD17307Q5A
C72
22uF
C75
22uF
C76
22uF
C77
22uF
R123
0.01R
Q12
Si7141DP
+BATT
C69
10uF
C71
0.1uF
C74
10uF
SRP
SRN
C70
0.1uF
C73
0.1uF
D5
BAT54C
+BATT
VBUS
VCC28

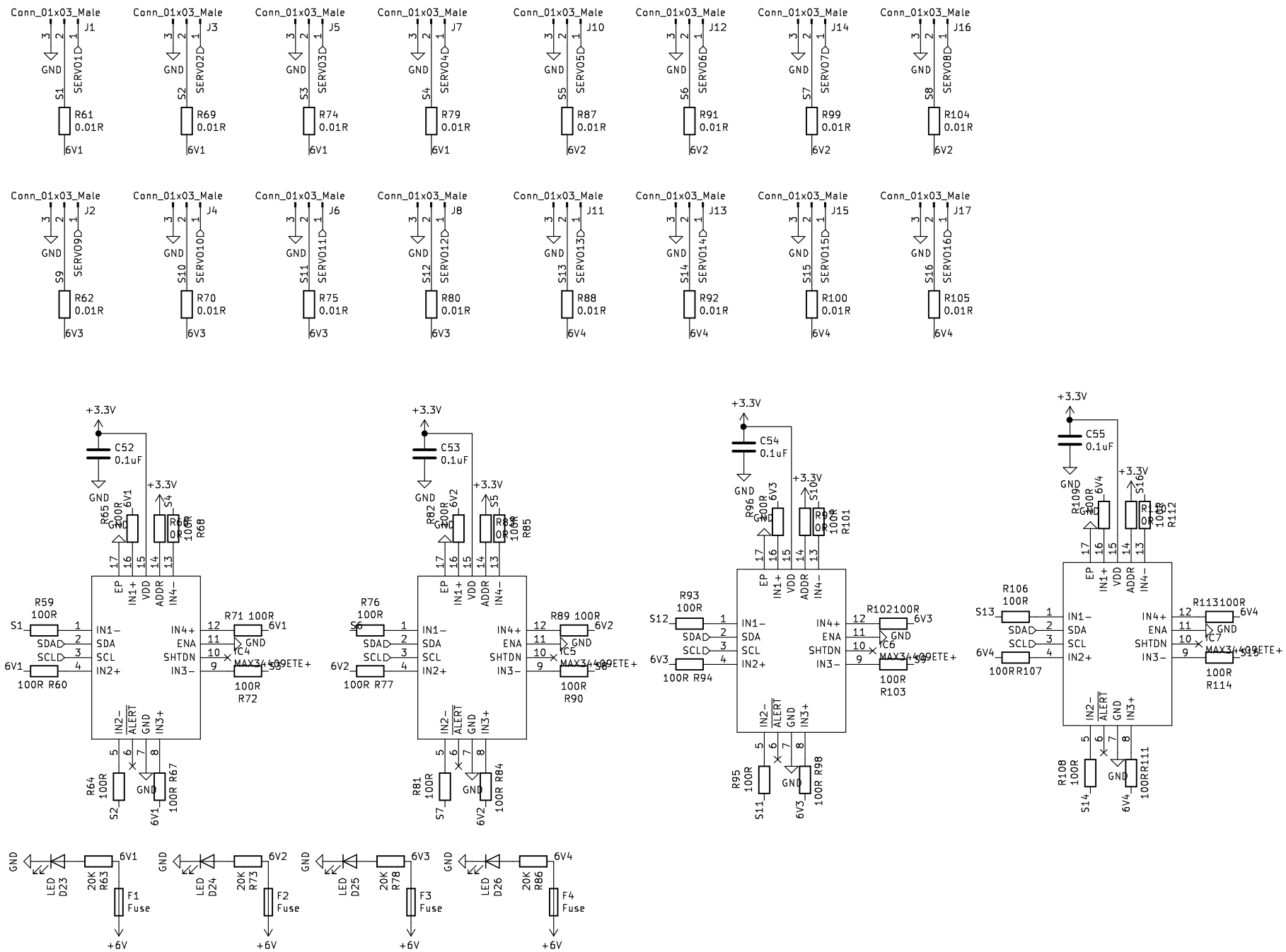
Conn_01x03_Male
J1
J2
J3
J4
J5
J6
J7
J8
J10
J11
J12
J13
J14
J15
J16
J17
GND
SERVO1
SERVO2
SERVO3
SERVO4
SERVO5
SERVO6
SERVO7
SERVO8
SERVO9
SERVO10
SERVO11
SERVO12
SERVO13
SERVO14
SERVO15
SERVO16
R61 0.01R
R62 0.01R
R69 0.01R
R70 0.01R
R74 0.01R
R75 0.01R
R79 0.01R
R80 0.01R
R87 0.01R
R88 0.01R
R91 0.01R
R92 0.01R
R99 0.01R
R100 0.01R
R104 0.01R
R105 0.01R
6V1
6V2
6V3
6V4
+3.3V
C52 0.1uF
C53 0.1uF
C54 0.1uF
C55 0.1uF
R65 100R
R68 100R
R82 100R
R85 100R
R96 100R
R101 100R
R109 100R
R112 100R
R59 100R
R60 100R
R71 100R
R72 100R
R76 100R
R77 100R
R89 100R
R90 100R
R93 100R
R94 100R
R102 100R
R103 100R
R106 100R
R107 100R
R113 100R
R114 100R
R64 100R
R67 100R
R81 100R
R84 100R
R95 100R
R98 100R
R108 100R
R111 100R
IN1−
SDA
SCL
IN2+
IN4+
ENA
SHTDN
IN3−
EP
IN1+
VDD
ADDR
IN4−
IN2−
ALERT
GND
IN3+
MAX34409ETE+
LED D23
LED D24
LED D25
LED D26
20K R63
20K R73
20K R78
20K R86
F1 Fuse
F2 Fuse
F3 Fuse
F4 Fuse
+6V

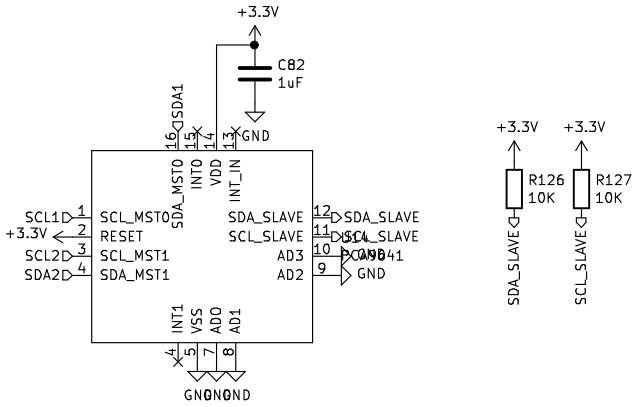
+3.3V
C82
1uF
SDA1
GND
SDA_MST0
INT0
VDD
INT_IN
SCL1
SCL_MST0
+3.3V
RESET
SCL2
SCL_MST1
SDA2
SDA_MST1
SDA_SLAVE
SCL_SLAVE
AD3
AD2
GND
INT1
VSS
ADO
AD1
GND
GND
GND

+3.3V
+3.3V
R126
10K
R127
10K
SDA_SLAVE
SCL_SLAVE

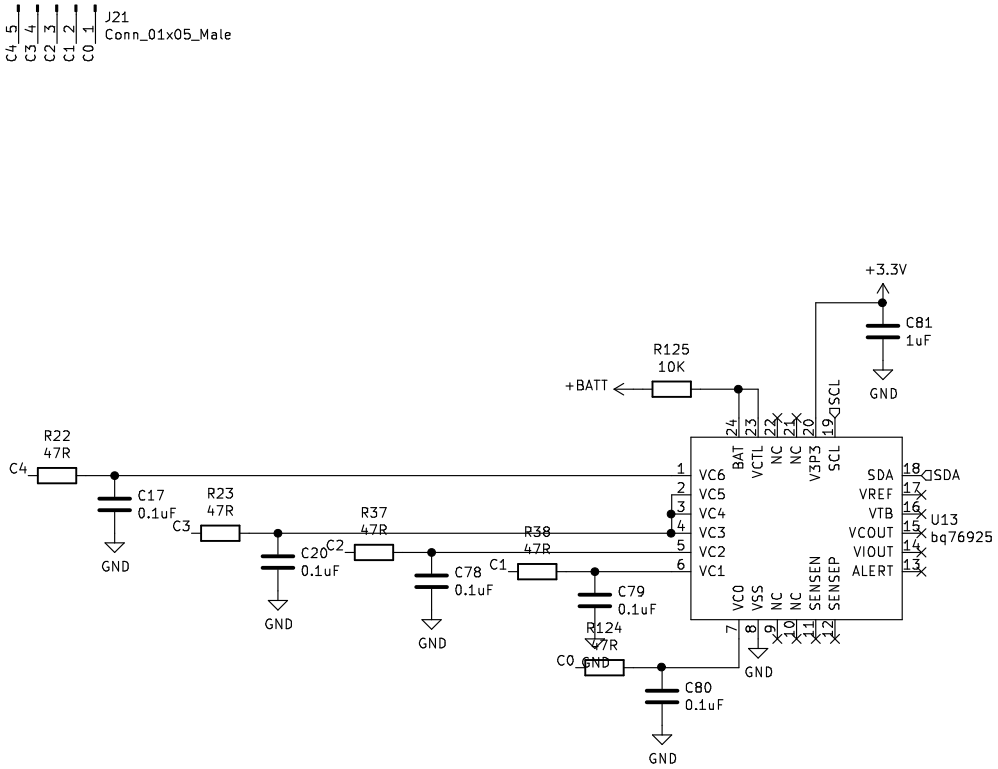
J21
Conn_01x05_Male
C4_5
C3_4
C2_3
C1_2
C0_1
+3.3V
C81
1uF
GND
R125
10K
+BATT
SCL
R22
47R
C4
C17
0.1uF
GND
R23
47R
C3
C20
0.1uF
GND
R37
47R
C2
C78
0.1uF
GND
R38
47R
C1
C79
0.1uF
R124
47R
C0
GND
C80
0.1uF
GND
BAT
VCTL
NC
NC
V3P3
SCL
VC6
VC5
VC4
VC3
VC2
VC1
VC0
VSS
NC
NC
SENSEN
SENSEP
SDA
VREF
VTB
VCOUT
VIOUT
ALERT
SDA
U13
bq76925