THADOMAL SHAHANI ENGINEERING COLLEGE

DEPARTMENT OF

Artificial Intelligence & Data Science

Name of Student	:	**Neeraj Pandey**
Class	:	**SE**
Division	:	**S2**
Roll Number	:	**73**
Batch	:	**S21**
Subject	:	**Fundamentals of Telecommunication of**

Systems

Experiment Number :

9

Experiment Title :

Generation and Observation Amplitude Modulated (AM) Signals

Date of Performance :

10 March 2026

Date of Submission :

10 March 2026

Experiment No. 09

Title: Generation and Observation of Amplitude Modulated (AM) Signals

Aim

To design and simulate an Amplitude Modulation (AM) circuit in LTspice using a Behavioral Voltage Source acting as a multiplier. To observe the modulated waveform in the time domain and calculate the modulation index for three different modulating signal amplitudes.

Software Used

LTspice 26.0.1 (High-performance SPICE simulation software).

Theory

1.What is Modulation?

Modulation is the process of superimposing a low-frequency information signal (message signal) onto a high-frequency carrier signal so that the information can be transmitted efficiently over long distances through a communication channel.

In communication systems, the original signal containing information (such as voice, music, or data) usually has a low frequency and low power, which makes it unsuitable for direct transmission. By combining it with a high-frequency carrier wave, the signal can travel longer distances with less distortion and interference.

The carrier signal is usually a sinusoidal waveform characterized by three parameters:

- Amplitude
- Frequency
- Phase

During modulation, one of these parameters is varied according to the instantaneous value of the message signal.

2. What is Amplitude Modulation (AM)?

Amplitude Modulation (AM) is a type of modulation in which the amplitude of the high frequency carrier signal is varied in proportion to the instantaneous amplitude of the message signal, while the frequency and phase of the carrier remain constant.

In AM, the envelope of the carrier wave follows the shape of the modulating signal.

AM signal equation: $s(t) = [Ac + Am$

$\sin(2\pi fmt)] \sin(2\pi fct)$

Where
Ac = amplitude of carrier signal Am
= amplitude of modulating signal fc
= carrier frequency fm = message
signal frequency

AM is commonly used in radio broadcasting.

3. What is Modulation Index?

The modulation index represents the degree or depth of modulation applied to the carrier signal.

It is defined as the ratio of the amplitude of the modulating signal to the amplitude of the carrier signal.

Formula:

$\mu = Am / Ac$

Where

μ = modulation index

Am = amplitude of message signal

Ac = amplitude of carrier signal

It can also be calculated from the AM waveform using:

$\mu = (Vmax - Vmin) / (Vmax + Vmin)$

Where

Vmax = maximum envelope voltage

Vmin = minimum envelope voltage

4. Describe Under-modulation, Critical Modulation and Over-modulation

Under-modulation

Under-modulation occurs when the modulation index is less than 1.

Condition:

$\mu < 1$

In this case the amplitude of the modulating signal is smaller than the carrier amplitude. The envelope does not reach zero and the signal is transmitted without distortion but the carrier power is not fully utilized.

Critical Modulation

Critical modulation occurs when the modulation index is equal to 1.

Condition:

$\mu = 1$

In this case the amplitude of the modulating signal is equal to the carrier amplitude. The envelope of the AM signal just touches zero and this condition provides maximum modulation without distortion.

Over-modulation

Over-modulation occurs when the modulation index is greater than 1.

Condition:

$\mu > 1$

In this case the amplitude of the modulating signal becomes greater than the carrier amplitude. The envelope crosses zero and distortion occurs in the demodulated signal.

Mathematical Representation of AM

Let:

- Carrier signal: $c(t) = A_c \sin(2\pi f_c t)$
- Message signal: $m(t) = A_m \sin(2\pi f_m t)$

The standard expression for an AM signal is represented as:

$s(t) = [A_c + m(t)] \sin(2\pi f_c t)$ ….. (1) where

- A_m is the peak amplitude of the modulating signal
- A_c the peak amplitude of the carrier signal

The modulation index is defined as the ratio of the peak amplitude of the modulating signal (A_m) to the peak amplitude of the carrier signal (A_c).

$$\text{Modulation index } (\mu) = \frac{A_m}{A_c}$$

For simplicity, we can take $A_c = 1$, so that A_m will directly represent modulation index. Thus, the AM signal can be given by:

$s(t) = [1 + m(t)] \sin(2\pi f_c t)$ …. (2)

Circuit Implementation of the AM Equation

The AM equation $s(t) = [A_c + m(t)] \sin(2\pi f_c t)$ has three distinct parts:

Part 1 – [Ac + m(t)]: A DC value Ac (=1) added to the message signal m(t). This is realised by connecting one DC source (Ac = 1) and one SINE voltage source (message m(t)) in series (A_m value will decide the modulation index).

Part 2 – sin ($2\pi f_c t$): Multiplication by the normalised carrier c(t) with $A_c = 1$. This is realised by a separate SINE voltage source for the carrier.

Part 3 – multiplication of Part 1 and Part 2: This can be realised by a Behavioral Voltage Source multiplier.

Component	Source Type	Signal Produced	Key Setting
V1	SINE source	Normalised carrier: $\sin(2\pi \cdot f_c \cdot t)$	Amplitude = 1V, Freq = 100k, DC offset = 0
V2	SINE source	Message signal: $A_m \cdot \sin(2\pi \cdot f_m \cdot t)$	Amplitude = Am (varies per case from 0 to 2), Freq = 1k, DC offset = 0
V3	DC source	Bias: Ac = 1V	DC Value = 1 (equals A_c)
B1	Behavioral Voltage (BV)	AM output: V(sum) × V(carrier)	V = V(sum) * V(carrier)
R1	Resistor	50Ω output load	Value = 50

Simulation Procedure

Step 1: Place the Normalised Carrier Source Vc (SINE, 100 kHz, Vamp = 1)

- Select voltage source, and place it.
- Right-click on the voltage source → Advanced → select SINE.
- Enter the following values:

DC offset (Voffset) = 0

Amplitude (Vamp) = 1 **← Unit amplitude — normalised carrier**

Frequency = 100k **← fc = 100kHz (carrier frequency)**

Tdelay = 0, Theta = 0, Phi = 0

- Right-click on the label V1 and replace it by Vc
- Press 'G' → place ground below Vc.

- Press ‘W’ to wire the components. Connect negative (–) terminal of Vc to Ground.
- Connect a free wire from positive (+) terminal of Vc
- Press ‘N’ for assigning Net Name. Type ‘carrier’ and press Ok.
- Paste it on the free wire.
- Hover over the free wire — bottom status bar must show 'carrier' (not N001 or N002).

***Step 2:* Place the Message Signal Source Vm (SINE, 1 kHz)**

- Select voltage source, and place it to the right to voltage source Vc.
- Right-click on the voltage source → Advanced → select SINE.
- Enter the following values:

DC offset (Voffset) = 0

Amplitude (Vamp) = 0.5 ← **Am = 0.5 (change for other cases)**

Frequency = 1k ← **fm = 1kHz (message frequency)**

Tdelay = 0, Theta = 0, Phi = 0

- Right-click on the label V2 and replace it by Vm

***Step 3:* Place the DC Bias Source V3 (Ac = 1V DC)**

- Select voltage source, and place the third source below Vm
- Right-click V3 → in the simple Value field type:

1 ← 1V DC = Ac (carrier amplitude)

- Press 'G' → place ground below V3.
- Press ‘W’ to wire the components. V3 negative (−) → GND
- V3 positive (+) → Vm negative (−) ← wire these two pins together
- Vm positive (+) → free wire
- Press ‘N’ for assigning Net Name. Type ‘sum’ and press Ok.

-
- Paste it on the free wire.

  Hover over the free wire — bottom status bar must show 'sum' (not N001 or N002).

Step 4: ***Place the Behavioral Voltage Source B1 (Multiplier)***

- Press 'P' → search bv → select Behavioral Voltage → place to the right of Vc, Vm, V3.
- Right-click B1 → in the Value field type EXACTLY:

  V = V(sum) * V(carrier)

B1 Expression — Verification:

V(sum) = Ac + Am·sin(2π·fm·t) ← **from V3 + Vm series (Step 3)**

V(carrier) = sin(2π·fc·t) ← **from Vc with Vamp=1 (Step 1)**

B1 output = V(sum) × V(carrier)

= [Ac + Am·sin(2π·fm·t)] × sin(2π·fc·t)

= s(t) matches standard AM equation (1)

Step 5: ***Place Load Resistor R1 and Complete the Circuit***

- Press 'R' → place resistor. Right-click → set value to 50.
- Press 'W' → connect B1 positive (+) terminal to top of R1.
- Press 'N' → label this wire: AM_out
- Press 'G' → ground B1 negative (−) terminal and R1 bottom terminal.

Step 6: ***Set Up and Run Transient Simulation***

- Click Simulate → Edit Simulation Cmd → Transient tab.
- Set Stop Time:
  - .tran 5m ← 5 milliseconds = 5 complete message cycles at 1 kHz
- Place this directive on the schematic canvas. Click Run.

•

Step 7: ***View Waveforms***

- Click on the AM_out wire → adds V(AM_out) to the plot.

  Click on the sum wire → adds V(sum) to see [Ac + m(t)] envelope.

- Click on the carrier wire → adds V(carrier) to see normalised carrier.

Measuring μ from the Waveform

Measure V_{max} (highest peak) and V_{min} (lowest trough) of the AM waveform:

$$\text{Modulation index } (\mu) = \frac{V_{max} - V_{min}}{V_{max} + V_{min}}$$

Observations

Perform the simulation for THREE cases by changing ONLY the Amplitude of Vm each time. Vc (Vamp=1), V3 (1V DC), B1 expression, R1, and simulation time remain unchanged for all cases.

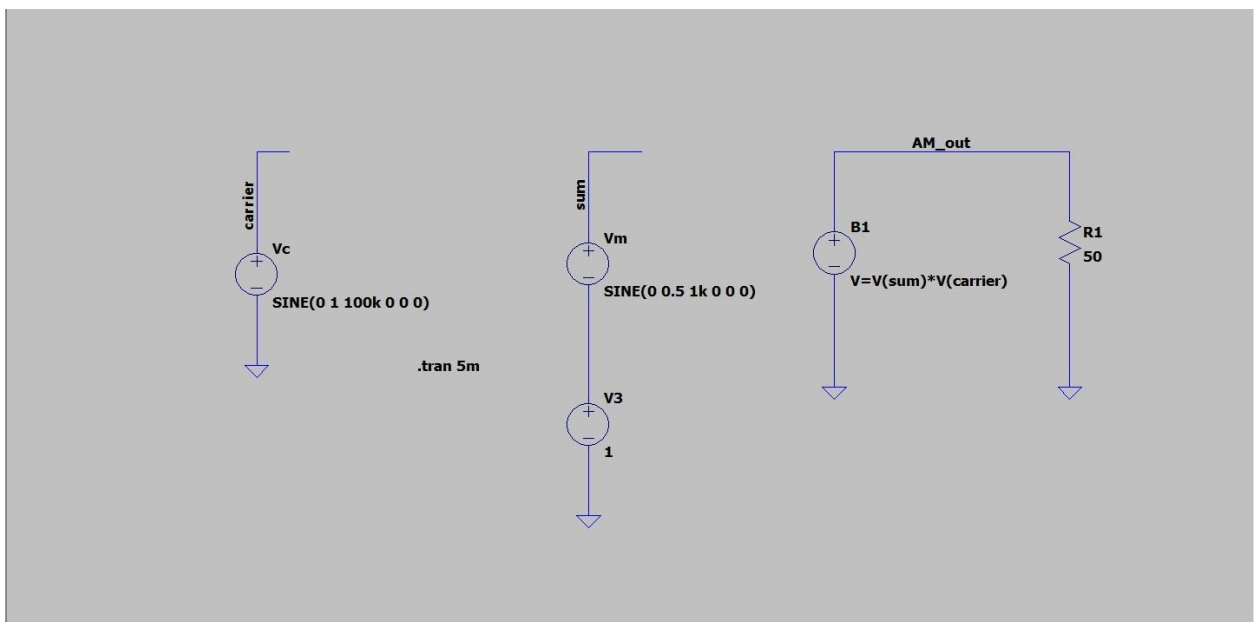

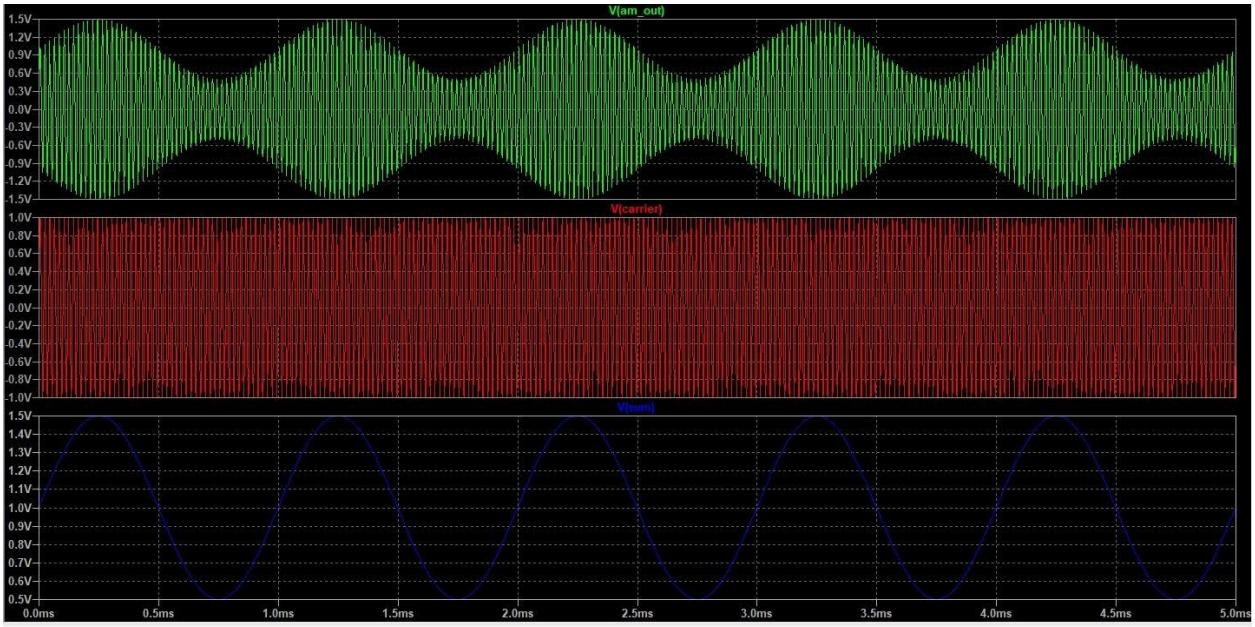

x = 3.615ms y = -0.964V

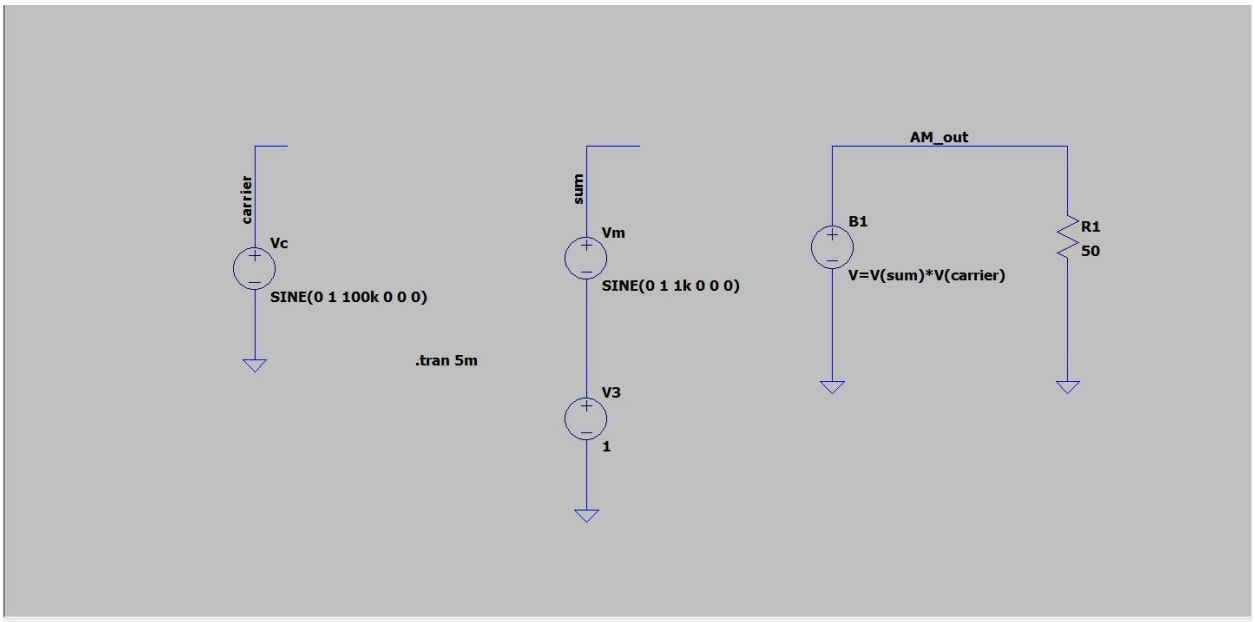

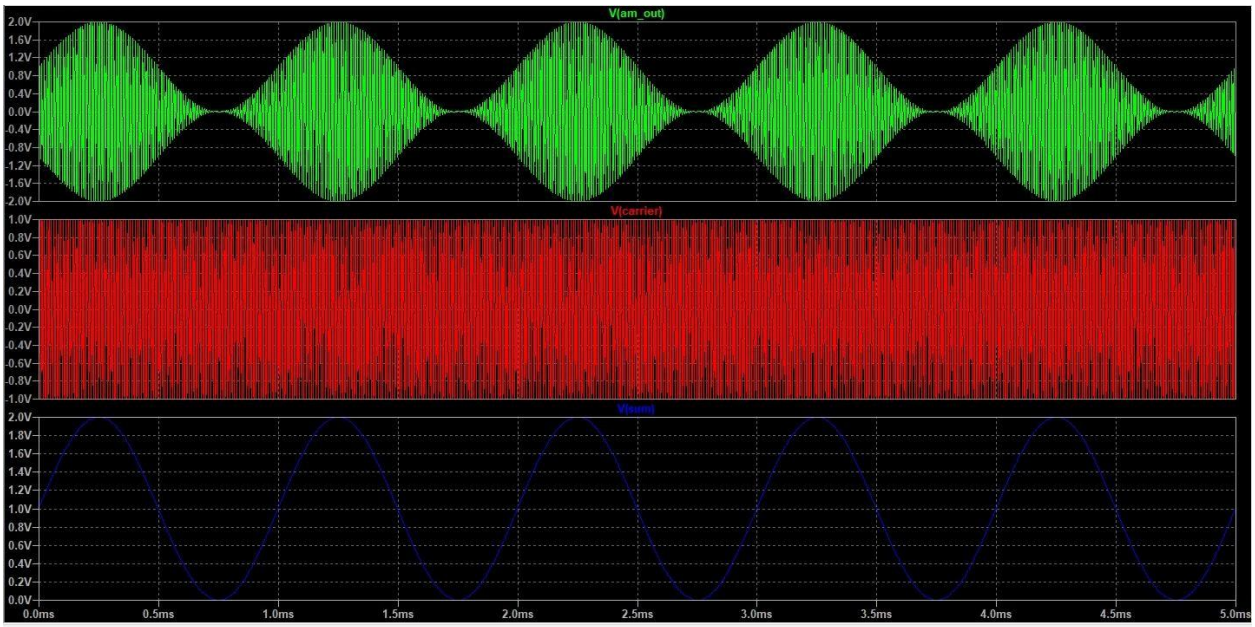

x = 4.978ms y = 0.556V

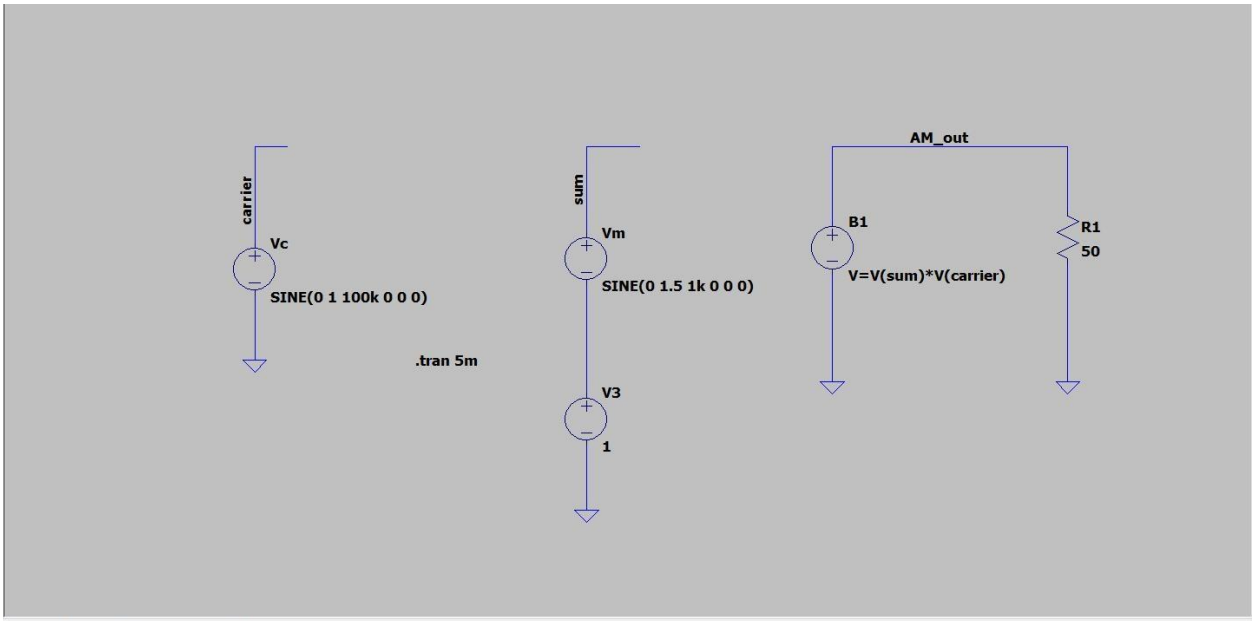

Right click to edit the Name of R1

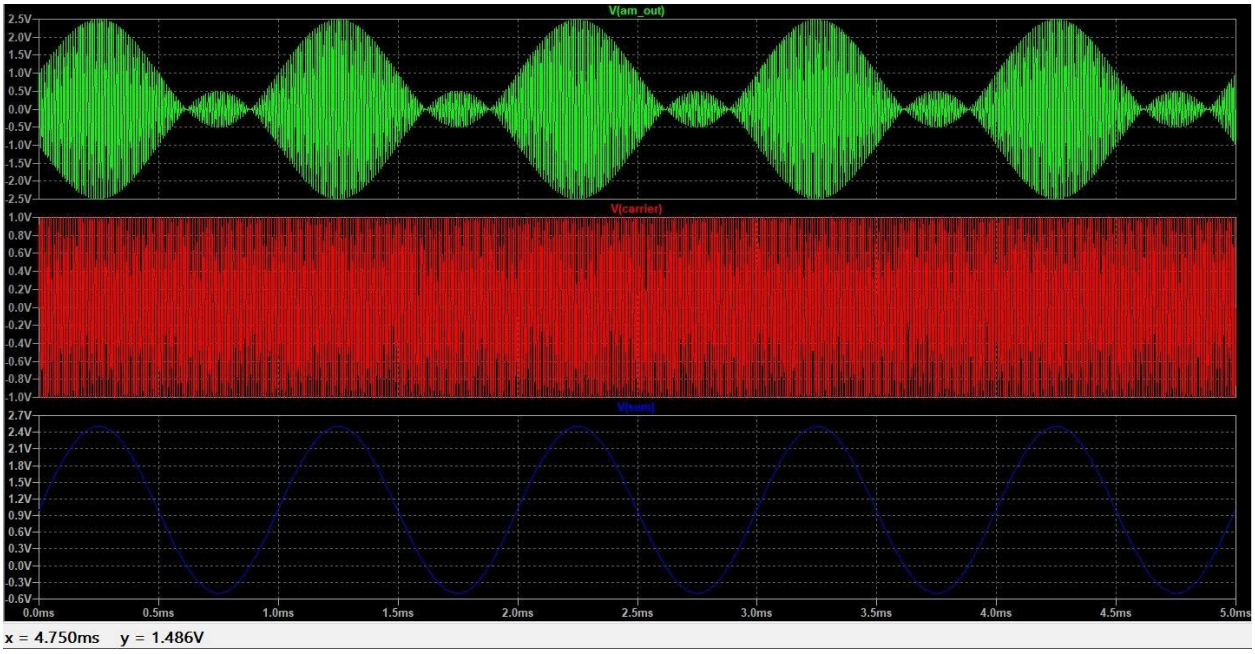

Observation Table

Case	Vm (Am)	Vc (Ac)	Theor. μ	V_max	V_min	Meas. μ	Modulation Type
1	0.5V	1V	0.5	1.5V	0.5V	0.5V	Under-modulation
2	1.0V	1V	1.0	2V	0V	1V	Critical modulation
3	1.5V	1V	1.5	2.5V	-0.5V	1.5V	Over-modulation

Conclusion

The AM simulation was performed using four components — Vc (normalised carrier, Vamp=1), Vm (message signal), V3 (DC bias = Ac = 1), and B1 (BV multiplier) — directly implementing the standard AM equation:

$$s(t) = [A_c + m(t)] \sin(2\pi f_c t)$$

- Case 1 (μ=0.5): Clean under-modulated AM. Envelope varied between 1.5V and 0.5V. Measured μ = 0.5
- Case 2 (μ=1.0): Critical modulation. Envelope minimum just touched 0V. Measured μ = 1.
- Case 3 (μ=1.5): Over-modulation. Phase reversal observed when V(sum) went negative. Measured μ = 1.5.