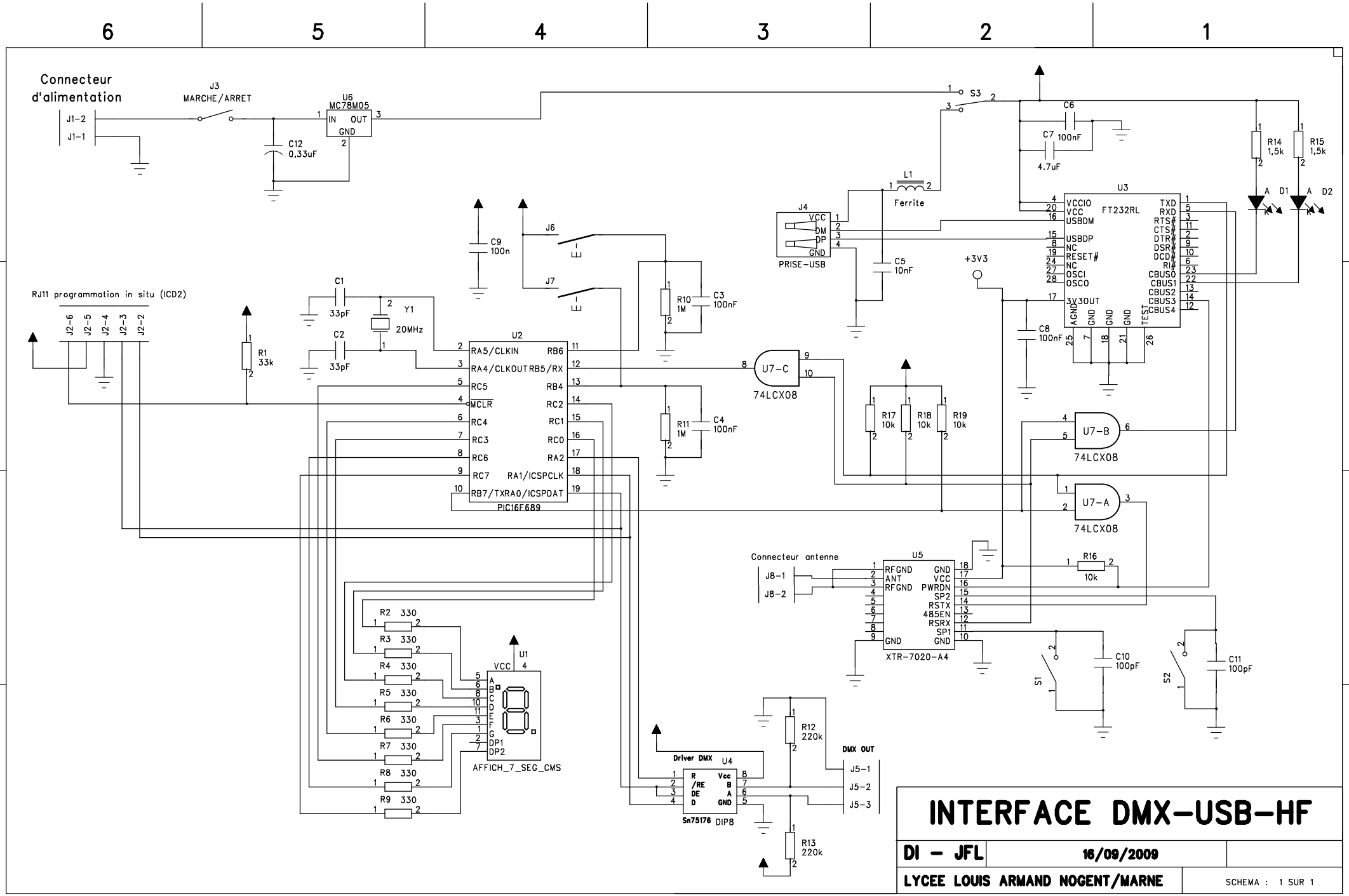
Connecteur d'alimentation
J1-2
J1-1
J3
MARCHE/ARRET
U6
MC78M05
IN
OUT
GND
C12
0,33uF
S3
C6
C7
100nF
4.7uF
L1
Ferrite
J4
VCC
DM
DP
GND
PRISE-USB
C5
10nF
+3V3
U3
FT232RL
VCCIO
VCC
USBDM
USBDP
NC
RESET#
OSCI
OSCO
3V3OUT
AGND
TEST
TXD
RXD
RTS#
CTS#
DTR#
DSR#
DCD#
RI#
CBUS0
CBUS1
CBUS2
CBUS3
CBUS4
C8
100nF
R14
1,5k
R15
1,5k
D1
D2
C9
100n
J6
J7
RJ11 programmation in situ (ICD2)
J2-6
J2-5
J2-4
J2-3
J2-2
R1
33k
C1
33pF
C2
33pF
Y1
20MHz
U2
RA5/CLKIN
RA4/CLKOUT
RC5
MCLR
RC4
RC3
RC6
RC7
RB7/TXRA0/ICSPDAT
RB6
RB5/RX
RB4
RC2
RC1
RC0
RA2
RA1/ICSPCLK
PIC16F689
R10
1M
C3
100nF
R11
1M
C4
100nF
U7-C
74LCX08
R17
10k
R18
10k
R19
10k
U7-B
74LCX08
U7-A
74LCX08
Connecteur antenne
J8-1
J8-2
U5
RFGND
ANT
RFGND
GND
VCC
PWRDN
SP2
RSTX
485EN
RSRX
SP1
GND
XTR-7020-A4
R16
10k
S1
C10
100pF
S2
C11
100pF
R2 330
R3 330
R4 330
R5 330
R6 330
R7 330
R8 330
R9 330
U1
VCC
A
B
C
D
E
F
G
DP1
DP2
AFFICH_7_SEG_CMS
Driver DMX
U4
R
/RE
DE
D
Vcc
B
A
GND
Sn75176
DIP8
R12
220k
R13
220k
DMX OUT
J5-1
J5-2
J5-3
INTERFACE DMX-USB-HF
DI - JFL
16/09/2009
LYCEE LOUIS ARMAND NOGENT/MARNE
SCHEMA : 1 SUR 1