Driver Sections

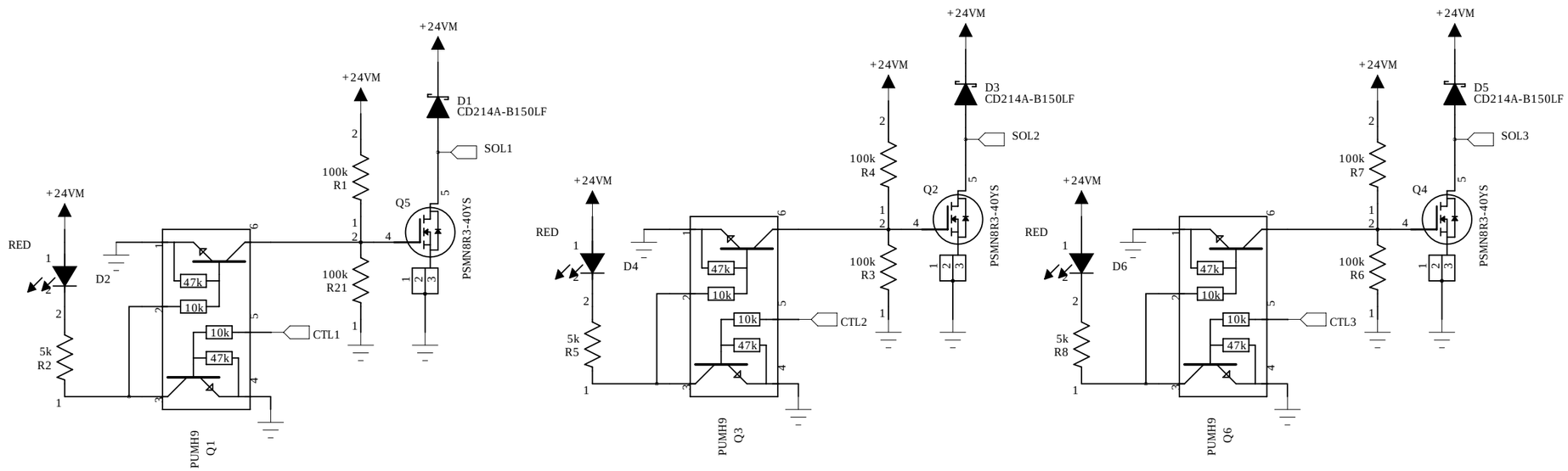

Power Input

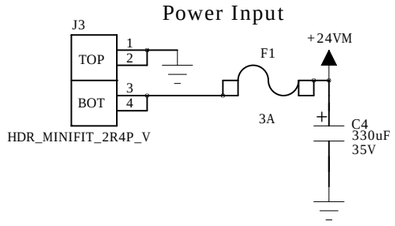

Control Inputs

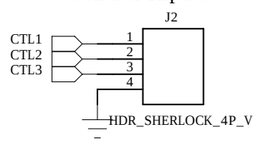

Solenoid Outputs

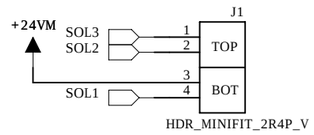

Power Indication

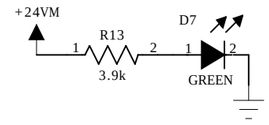

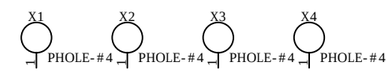

DRAWN: C. Hyman	DATED: 23 Mar 2012
CHECKED: <Checked By>	DATED: <Checked Date>
RELEASED: <Released By>	DATED: <Release Date>

PROJECT: 2012 OSURC Mars Rover

TITLE: Solenoid Driver

CODE:	SIZE:	DRAWING NO:	REV:
U	B	SOL.DRV	2

SCALE: N/A SHEET: 1 OF 1