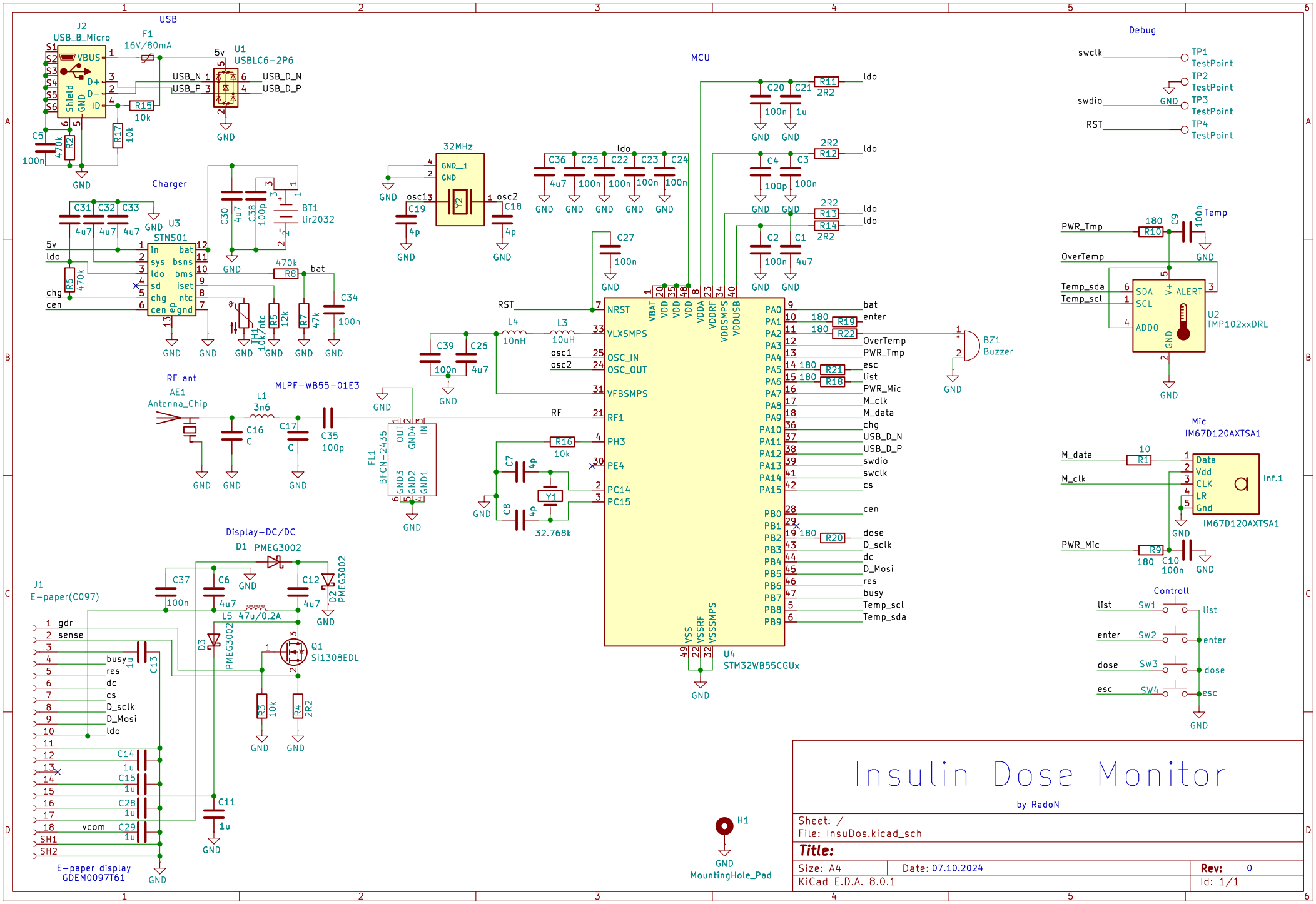
USB
J2
USB_B_Micro
F1
16V/80mA
U1
USBLC6-2P6
5v
USB_N
USB_P
USB_D_N
USB_D_P
R15
10k
R17
10k
C5
100n
R2
470k
GND
Charger
U3
STNS01
C31
C32
C33
4u7
5v
ldo
chg
cen
R6
470k
in
sys
ldo
sd
chg
cen
bat
bsns
bms
iset
ntc
gnd
C30
4u7
C38
100p
BT1
lir2032
R8
470k
bat
C34
100n
TH1
10k/ntc
R5
12k
R7
47k
MCU
32MHz
GND_1
GND
Y2
osc13
osc2
C19
4p
C18
4p
C36
C25
C22
C23
C24
4u7
100n
C20
C21
R11
2R2
1u
C4
C3
R12
100p
R13
R14
C2
C1
C27
RST
NRST
VLXSMPS
OSC_IN
OSC_OUT
VFBSMPS
RF1
PH3
PE4
PC14
PC15
VBAT
VDD
VDDA
VDDRF
VDDSMPS
VDDUSB
VSS
VSSRF
VSSSMPS
L4
10nH
L3
10uH
C39
C26
4u7
osc1
osc2
RF
R16
10k
C7
4p
C8
4p
Y1
32.768k
U4
STM32WB55CGUx
PA0
PA1
PA2
PA3
PA4
PA5
PA6
PA7
PA8
PA9
PA10
PA11
PA12
PA13
PA14
PA15
PB0
PB1
PB2
PB3
PB4
PB5
PB6
PB7
PB8
PB9
bat
enter
OverTemp
PWR_Tmp
esc
list
PWR_Mic
M_clk
M_data
chg
USB_D_N
USB_D_P
swdio
swclk
cs
cen
dose
D_sclk
dc
D_Mosi
res
busy
Temp_scl
Temp_sda
R19
R22
R21
R18
R20
BZ1
Buzzer
Debug
swclk
swdio
RST
TP1
TestPoint
TP2
TP3
TP4
PWR_Tmp
OverTemp
Temp_sda
Temp_scl
R10
180
C9
100n
Temp
SDA
SCL
ADD0
ALERT
V+
U2
TMP102xxDRL
RF ant
AE1
Antenna_Chip
L1
3n6
C16
C
C17
C
C35
100p
MLPF-WB55-01E3
FL1
BFCN-2435
OUT
GND4
IN
GND3
GND2
GND1
Mic
IM67D120AXTSA1
M_data
M_clk
R1
10
Data
Vdd
CLK
LR
Gnd
Inf.1
PWR_Mic
R9
180
C10
100n
Controll
list
enter
dose
esc
SW1
SW2
SW3
SW4
Display-DC/DC
D1
PMEG3002
C37
100n
C6
4u7
C12
4u7
D2
PMEG3002
L5
47u/0.2A
D3
PMEG3002
Q1
Si1308EDL
R3
10k
R4
2R2
C11
1u
J1
E-paper(C097)
gdr
sense
busy
res
dc
cs
D_sclk
D_Mosi
ldo
vcom
SH1
SH2
C13
1u
C14
C15
C28
C29
E-paper display
GDEM0097T61
H1
MountingHole_Pad
Insulin Dose Monitor
by RadoN
Sheet: /
File: InsuDos.kicad_sch
Title:
Size: A4
Date: 07.10.2024
Rev: 0
KiCad E.D.A. 8.0.1
Id: 1/1