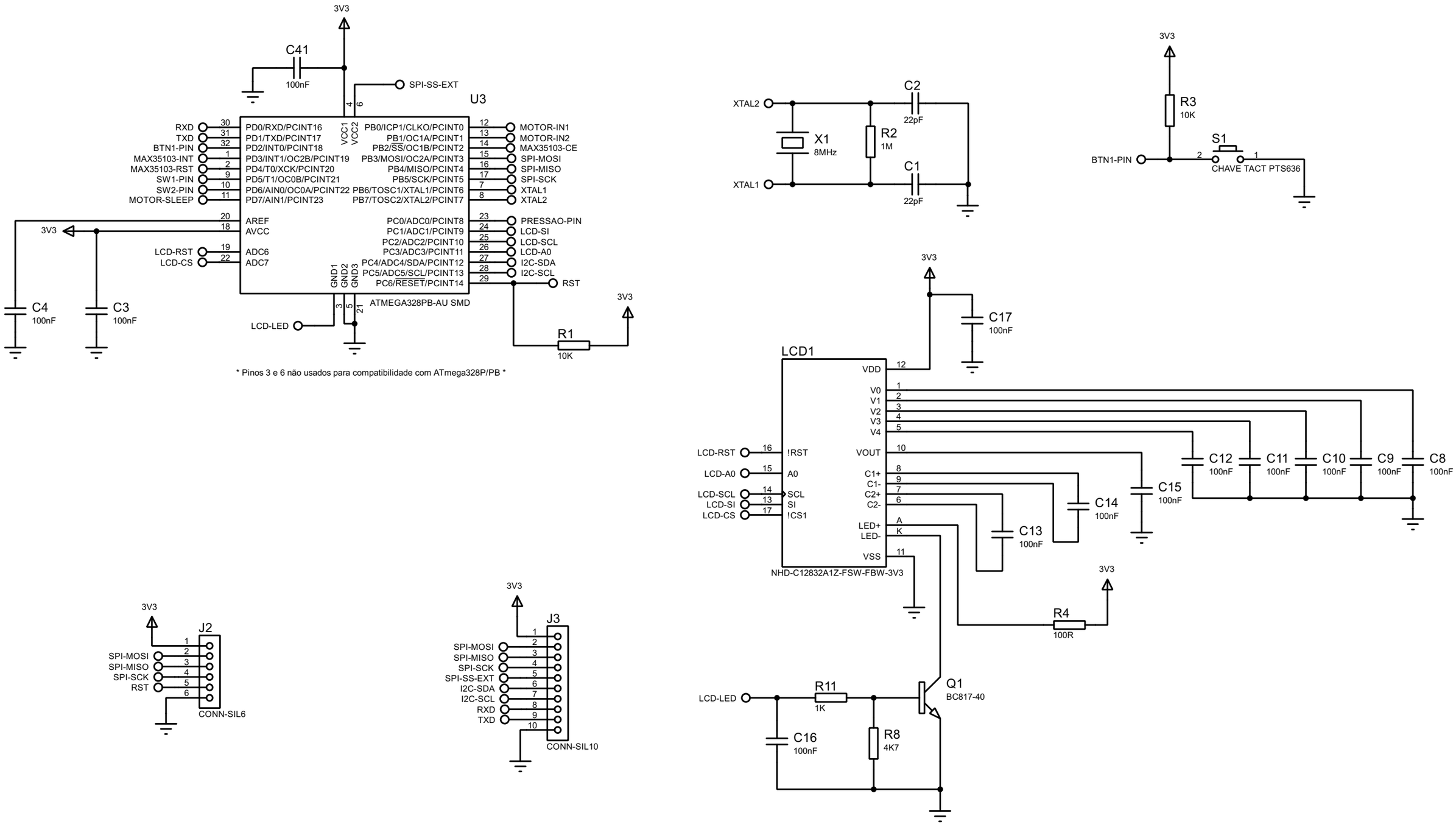

FILE NAME: **AquaFlow**	DATE: **03/09/2024**
DESIGN TITLE: **Quantun Leap**	PAGE: 1 of 2
PATH:	TIME: 07:55:38
BY: Felipe Bez Fontana	REV: v0.2

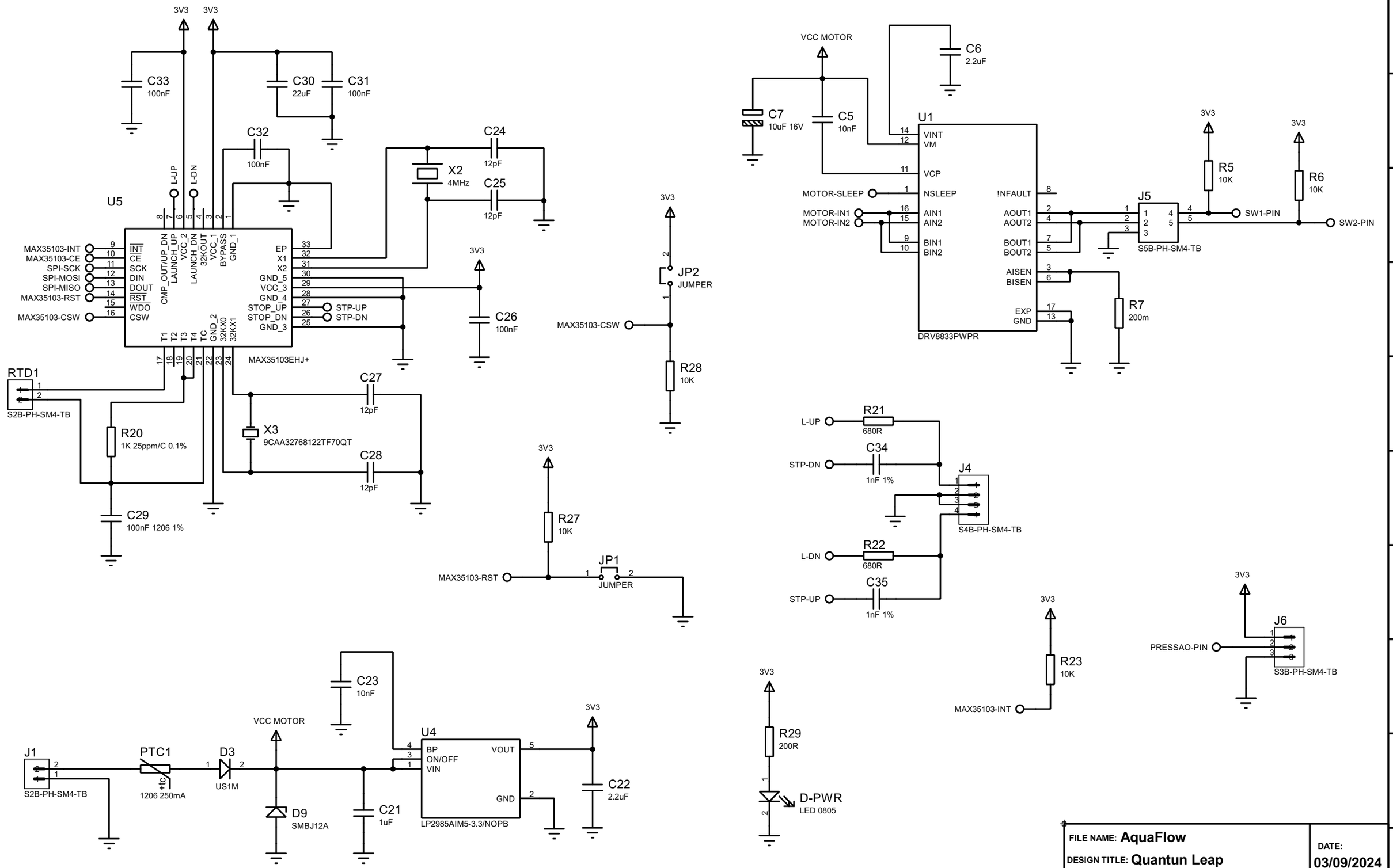

FILE NAME: **AquaFlow**

DESIGN TITLE: **Quantun Leap**

PATH:

BY: Felipe Bez Fontana

REV: v0.2

DATE: 03/09/2024

PAGE: 2 of 2

TIME: 07:55:38