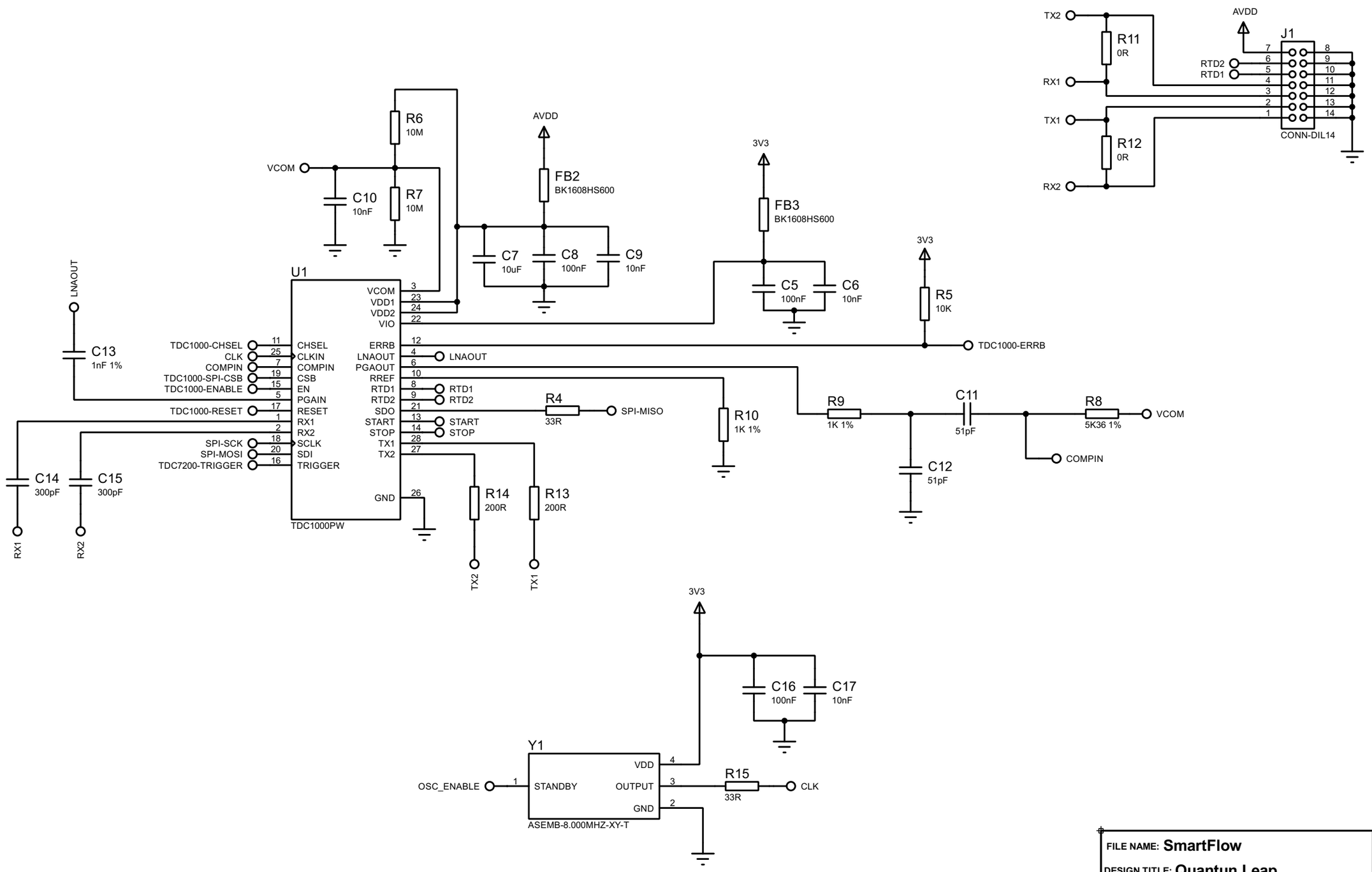

FILE NAME: **SmartFlow**	DATE: **20/05/2024**
DESIGN TITLE: **Quantun Leap**	PAGE: 1 of 4
PATH:	TIME: 10:13:14
BY: Felipe Bez Fontana	REV: v0.1

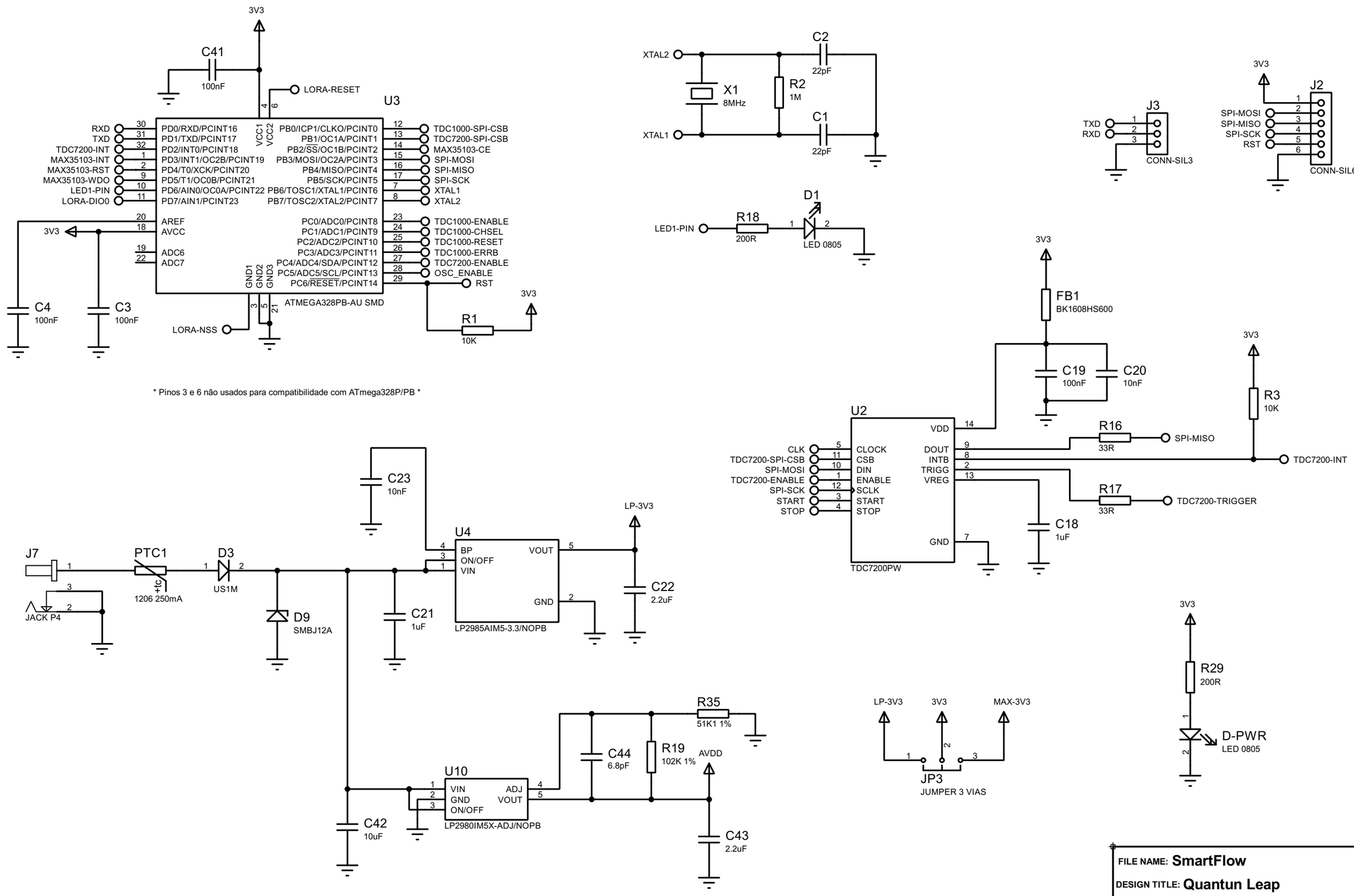

FILE NAME: **SmartFlow**	DATE: **20/05/2024**
DESIGN TITLE: **Quantun Leap**	PAGE: **2 of 4**
PATH:	TIME: **10:13:14**
BY: **Felipe Bez Fontana** REV: **v0.1**	

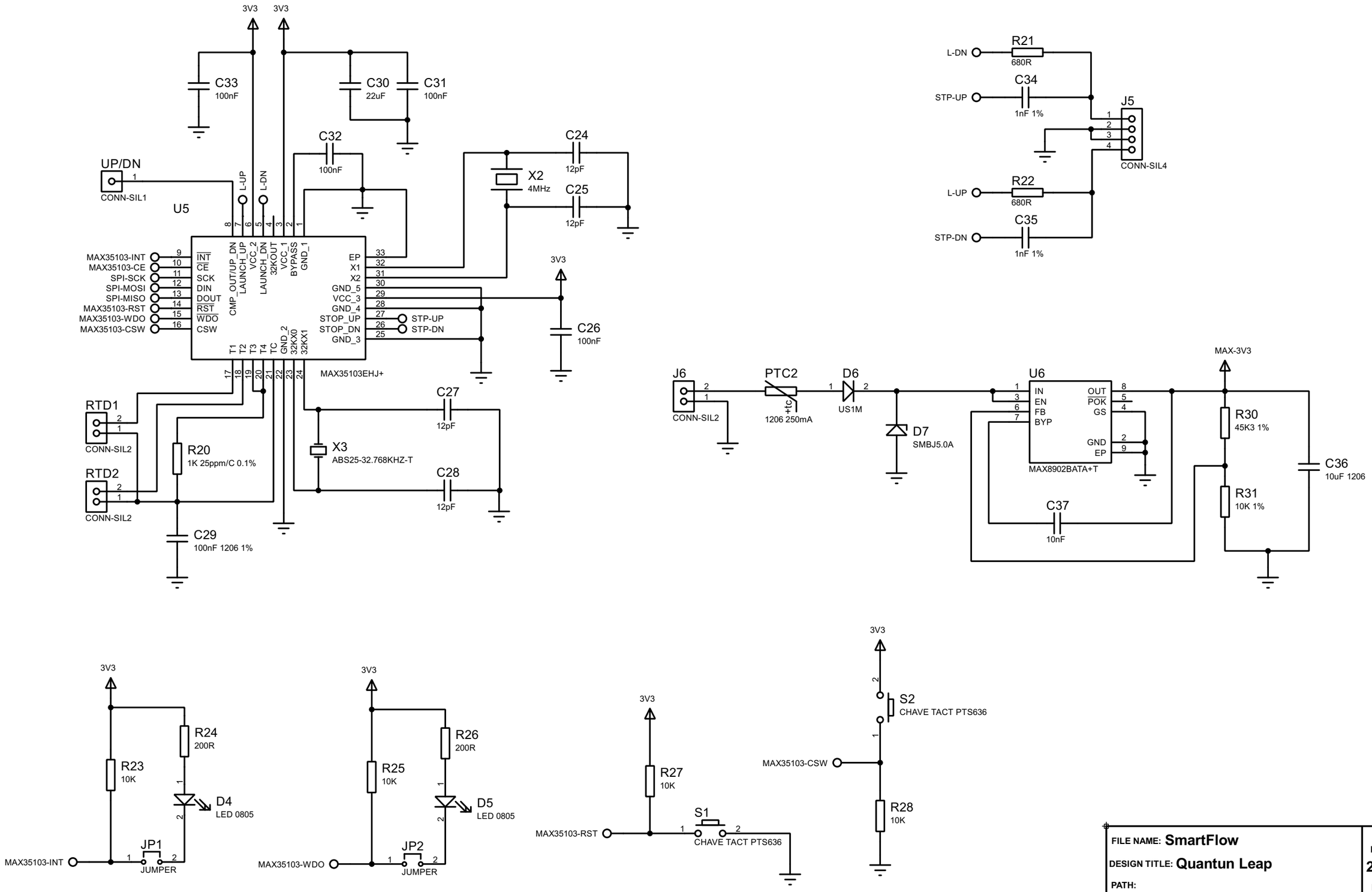

FILE NAME: **SmartFlow**	DATE: **20/05/2024**
DESIGN TITLE: **Quantun Leap**	PAGE: 3 of 4
PATH:	TIME: 10:13:14
BY: Felipe Bez Fontana	REV: v0.1

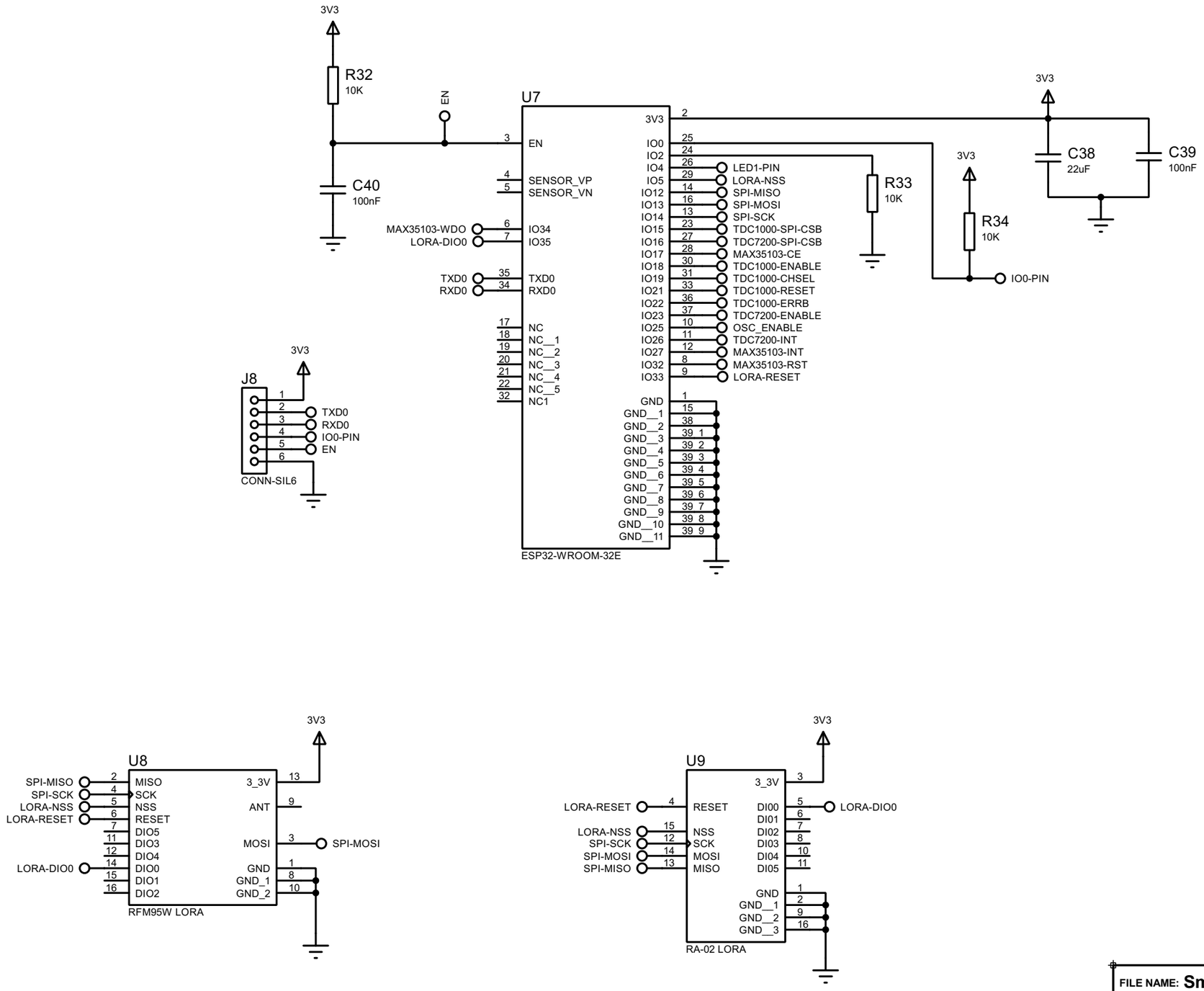

FILE NAME: **SmartFlow**

DESIGN TITLE: **Quantun Leap**

PATH:

BY: Felipe Bez Fontana

REV: v0.1

DATE: **20/05/2024**

PAGE: 4 of 4

TIME: 10:13:14