KU Leuven

Faculty of Engineering Technology

Implementation of a novel compliant transmission in a 3 DoF robotic testbench for collaborative hand guiding tasks

---

Oskar De Clerck

A thesis submitted for the degree of
Master of Science in *industriële wetenschappen: Elektromechanica*

Academic Year 2025–2026

Promotor: ir. Maurizio Grossi
Copromotor: prof. dr. ir. Dino Accoto

Abstract

Acknowledgements

Contents

Abstract **i**

Acknowledgements **iii**

Nomenclature **xi**

1 Introduction **1**

1.1 Background and Motivation 1

1.1.1 Musculoskeletal disorders and ergonomic work environments 1

1.1.2 Industrial motivation for ergonomic improvement 2

1.1.3 Physical human–robot interaction 2

1.1.4 Weight assisting devices 6

1.1.5 Intelligent Assist Devices 8

1.2 Problem Statement 9

1.3 Thesis Outline 9

2 Literature Review **11**

2.1 Theoretical Background 11

2.1.1 Impedance control 11

2.2 State of the Art 13

2.2.1 Series elastic actuator 13

2.2.2 Disturbance observer 13

2.2.3 ROS 13

2.2.4 Docker 13

2.3 State of the Art 13

3 Methodology **15**

3.1 System Overview and Requirements 15

3.2 Mechanical Design 15

3.3 Hardware Architecture 15

3.3.1 CAN Bus Topology 15

3.3.2 Sensor Architecture 15

3.4 Sensor and Actuator Modeling 15

3.4.1 SET Spring Model 15

3.4.2 Motor and Transmission Model 15

3.5 Control Architecture 15
3.5.1 State Machine 15
3.5.2 Gravity Compensation and Floating Mode 15
3.5.3 Weighing Mode 15
3.5.4 Carrying Mode 15
3.5.5 Put-Down Mode 15
3.6 Software Implementation 15
3.6.1 Real-Time Architecture 15
3.6.2 Configuration 16

4 Validation and Results **17**
4.1 Experimental Setup 17
4.1.1 Hardware Configuration 17
4.1.2 Parameter Identification 17
4.2 Spring and Sensor Characterization 17
4.3 Controller Performance 17
4.4 Assisted Load Handling Evaluation 17
4.5 Discussion 17

5 Conclusion and Future Work **19**
5.1 Conclusion 19
5.2 Future Work 19

References **21**

2D Manufacturing Drawings **25**
.1 CNC Part 1 25
.2 CNC Part 2 25
.3 CNC Part 3 25

Additional Experimental Results **27**

Source Code **29**

List of Figures

1.1 Human, robot, and shared workspace from Fraunhofer [6]. 3
1.2 Levels of cooperation between human worker and robot from Fraunhofer [6]. . 3
1.3 3ARM manipulator [19]. 7
1.4 Gas spring characteristic by Suspa [20]. 7
1.5 Spring balancer from Transprotec [21]. 8
1.6 IAD integrated in an assembly line [24]. 8

2.1 Impedance control for robotic structure in contact with an environment [25]. 12
2.2 General classification of the impedance control approaches [25]. 12
2.3 Mass–spring–damper system[25]. 13

List of Tables

4.1 Example results table. 17

Nomenclature

Symbols

$\boldsymbol{q}$	Joint position vector	[rad]
K_s	Spring stiffness	[Nm/rad]

Abbreviations

CAN	Controller Area Network
SET	Series Elastic Transmission

Chapter 1

Introduction

1.1 Background and Motivation

1.1.1 Musculoskeletal disorders and ergonomic work environments

Non-ergonomic work environments place strain on the human body, which can cause painful complications and limit the worker's ability to perform tasks optimally. Ergonomics can be defined as the study of work, where the goal is to fit tasks and jobs to workers' capabilities, rather than forcing workers to adapt to the job. An ergonomic work environment therefore implements task-specific strategies to prevent reduced work ability. How these complications arise, which parts of the body are affected, and how they can be prevented are explained in this section.

The musculoskeletal system contains muscles, bones, joints and connective tissues like tendons and ligaments. Musculoskeletal disorders (MSDs) can therefore be defined as injuries of the muscles, nerves, tendons, joints, cartilage, and spinal discs. When these injuries are sustained or worsened by exposure to risk factors in the workplace, they are also known as work-related musculoskeletal disorders (WMSDs). These disorders can go from minor aches to severe pain and chronic illness requiring medical treatment, potentially preventing workers from performing physical tasks.

WMSDs develop over time due to non-ergonomic working conditions and can be categorized into two main groups:

- Back disorders related to handling loads
- Upper limb disorders, also known as repetitive strain injuries (RSIs)

MSDs can be caused by, for example:

- Twisting and bending movements while handling loads
- Repetitive or forceful movements
- Awkward and static postures
- Exposure to vibrating tools
- Prolonged sitting or standing in the same position

An increase in MSDs has been reported worldwide. This rise is partly attributed to improved recognition and reporting, but also to the tendency for work to be more segmented and specialized. This trend is driven by an increasingly competitive global economy, where fast-paced repetitive work environments are more widespread.

1.1.2 Industrial motivation for ergonomic improvement

Musculoskeletal disorders affect approximately one in three people worldwide. Within the European Union, MSDs represent the most costly health-related problems, affecting 45 million workers. Many individuals are unable to continue working beyond the age of 60 due to these conditions, resulting in billions of euros in lost revenue and a substantial burden on the public healthcare system.

A declining physical condition can also lead to mental health issues such as depression or frustration, resulting in reduced job satisfaction and, indirectly, lower work performance, even when workers are still physically able to continue working.

The increase in education in the workforce, combined with higher expectations regarding job satisfaction, has reduced workers' tolerance for WMSDs. An ergonomic work environment can prevent the development of WMSDs and directly reduce both the cost to companies due to sick leave and the societal impact.

Reduced work ability can be categorized into absenteeism and presenteeism. Absenteeism refers to the absence from work due to injuries sustained on the job. Presenteeism describes the situation in which workers continue to attend their expected work duties despite existing injuries, often due to concerns about job security. In such cases, work is performed in a self–protective manner to reduce physical strain.

In Belgium, 2.5 million people were affected by MSDs in 2018 (approximately 62% of the Belgian working population in 2015), resulting in 3 billion euros in direct medical costs and 2 billion in work absenteeism, corresponding to 0.3% of Belgium's gross domestic product [1][2][3][4][5].

1.1.3 Physical human–robot interaction

There is a clear need to address reduced work efficiency resulting from physical injuries since this improves the quality of life of an increasingly older workforce, while also reducing the impact on social welfare systems and increasing overall economic productivity. Industry has already adopted robotic solutions to achieve accuracy, speed, and repeatability that human workers cannot provide. Humans, however, provide flexibility and have the capability to react to unforeseen circumstances. By increasing the degree of human participation, the strength and repeatability of robots are combined with the adaptability and decision–making skills of humans. Humans and robots each operate in their respective workspaces to perform their tasks, and in some cases share the same workspace, as illustrated in Figure 1.1.

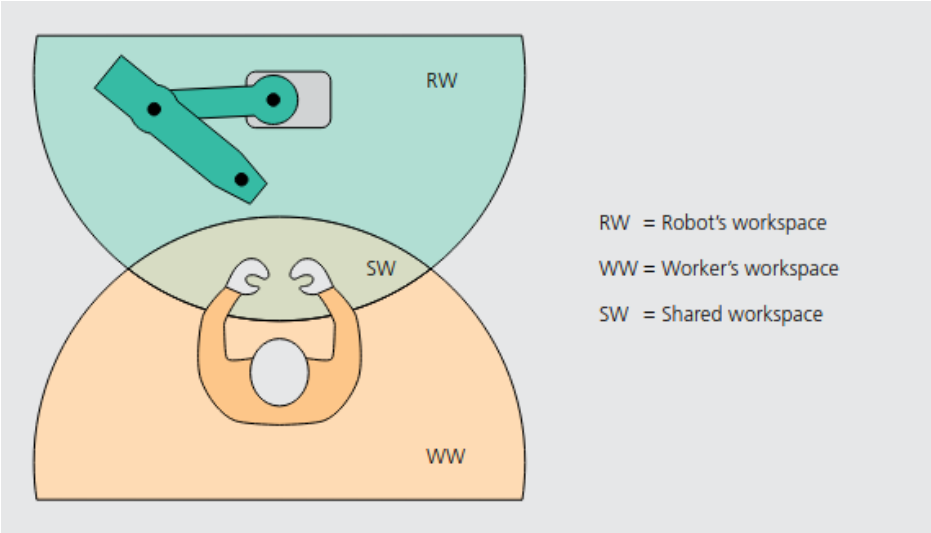

Figure 1.1: Human, robot, and shared workspace from Fraunhofer [6].

Human–robot cooperation generally refers to the use of robots without safety fencing, also called cage–free robots. This is in contrast to traditional robots which are stiff, heavy, and lack safety features that allow them to operate in the same space as humans, and are consequently only allowed to operate in closed –off workspaces.
Humans and robots can work together in different types of operation, as illustrated in Figure 1.2.

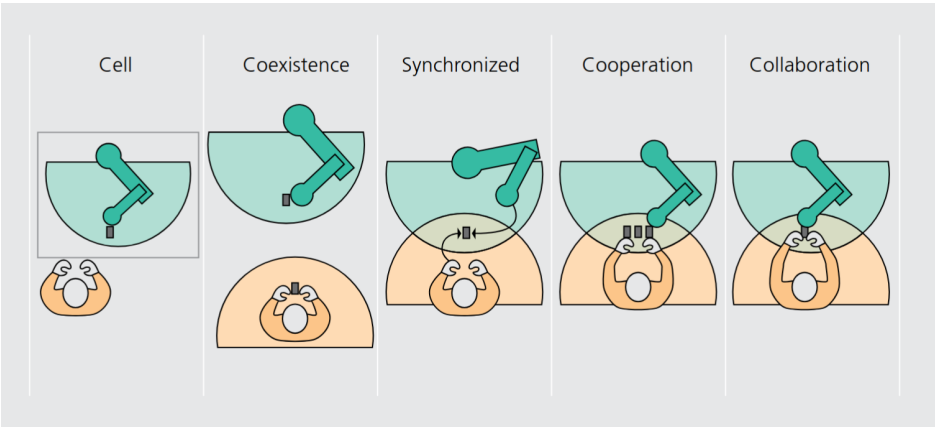

Figure 1.2: Levels of cooperation between human worker and robot from Fraunhofer [6].

From left to right an increasing level of interaction is shown.

- Cell: Robot operates in traditional cage, fenced–off from human contact
- Coexistence: Human and cage–free robot work at the same time, but in different workspaces
- Synchronized: Humans and cage–free robots work in the same workspace, but one at a time
- Cooperation: Human and cage–free robot have tasks in the same workspace at the same time, but do not work together on the same task

- Collaboration: Human and cage–free robot work in the same workspace on the same task

The robotic testbench developed in this thesis operates in collaboration mode during assisted load handling, when the human operator physically guides the robotic arm, and in coexistence mode during the floating stand–by state, when no physical interaction is taking place. This distinction is further clarified in chapter (idk exactly for now).
Collaborative robots, defined as robots capable of performing collaborative tasks as described above, are widely used in industry. However, they are still primarily applied in traditional robotic operations such as pick–and–place tasks. In many cases, humans and robots remain either physically separated or operate in a coexistence mode, where no physical barrier is present but no direct interaction takes place. Such implementations are only economically viable for large batch sizes, since a whole production line needs to be tuned towards that specific robotic solution.
Cage–free robotic arms that share a workspace with a human worker are introduced to increase production flexibility. Interactive robotic solutions for small batches and varying product sizes have become a clear need since 70% of collaboration between human workers and robots occurs in assembly applications. An industry survey reported that 86% of respondents were willing to invest in robotic solutions, indicating strong industrial interest. The primary motivations for introducing robotic arms in assembly environments are:

- Improving operational efficiency
- Improving ergonomics

Cage–free robotic solutions generally involve higher initial costs compared to traditional fenced systems due to safety certification requirements and conformity procedures to minimize the risk of injuries. However, companies are often willing to accept longer payback periods for implementing and testing company–specific robotic solutions which increase ergonomics [6][7].
ISO/TS 15066 covers the safety requirements for collaborative operations between human workers and robots. This normative classifies four different collaborative operations modes [8][9]:

- Safety–rated monitored stop
- Hand guiding
- Power and force limiting
- Speed and separation monitoring

Safety–rated monitored stop

The robot operates at its rated speed when a human is not present in the collaborative workspace. When a human enters the workspace, which can be detected by various means like laser scanners or light curtains, the robot undergoes a complete stop. As long as the human is in the workspace, the robot will not operate. Only by leaving the workspace and resetting the safety stop, can operation continue.

Hand guiding

Hand guided robotic applications are defined as a direct physical interaction between humans and robots, where the human operator has full control over the robot's motion. In this approach, a direct input device is located at or near the end–effector to measure input forces and simultaneously define the position of the human in the shared workspace. The robot must be in a monitored stop before hand guiding can be activated via an enabling device. Safety requirements for this mode include force and/or torque sensing at the guiding point, emergency stop accessible from the position where the robot is being guided, which is typically at the end–effector, and a maximum speed limit during guided motion.

Power and force limiting

This mode is the most commonly associated with collaborative robots. The robot's software and hardware are designed in such a way that any contact with a human cannot result in injury. Low robot mass, rounded surfaces, and padding are combined with active force and torque sensing, which limits contact forces with the environment below defined thresholds depending on the body region of the human that can be in contact with the robot.

Speed and separation monitoring

Robots and humans can operate in the same workspace at the same time, but the position and speed of the human and robot relative to each other is constantly monitored to adjust the speed of the robot with the goal of constantly having a minimum dynamical separation distance at all times.

Hand guiding is useful for packaging and assembly applications since it combines the physical strength of robotic arms, which can compensate for the weight of components or help with move relatively light but large components, with human intelligence.
ISO/TS 15066 specifies that the hand–guiding devices should be located at or near the robot end–effector, structurally restricting compliant interaction to a single designated contact point. Collisions or attempted handling of the robotic arm elsewhere will result in a safety stop [10].
Existing robotic solutions that allow a human worker to hand guide a robotic arm while simultaneously identifying and compensating for payloads of unknown variable weights, without requiring prior software configuration, are to the best of the author's knowledge, not available in assembly and packaging industries. When hand guiding is discussed in literature, it is typically limited to sensorized end–effectors on conventional stiff robots. Collaborative robots adopted in industry generally lack build–in compliance. As previously stated, collaborative robots are used for applications with little to no human contact, where precision and repeatability is more important than inherent compliance [11][12].
This absence in current industrial applications is further supported by surveys of end users, system integrators and researchers, which indicate that collaborative robots are still primarily used as conventional stiff robots with limited or no direct human interaction, while offering the added value of less space requirements for operation [13].

Current collaborative robots with the highest payloads, such as the UR30 from Universal Robots and the CR-35iB from FANUC, can handle loads up to 30kg and 50kg respectively. Still, hand guiding is mainly used for point– and path–based teaching and not for weight compensation tasks in hand guiding applications. The user can intuitively move the robot to a new point in space and record that position. This can be done for a single point or for a full path; in this case the robot records the continuous movement while a button is pressed. It is, however, possible to correctly configure collaborative robots for weight compensation, but software is required for correct calibration of the load attached to the end–effector. Although rare, some collaborative robots can estimate payload weight and center of mass by performing predefined controlled motions, but multiple interactions with the software controller are needed, making this approach time–consuming. This method is not generally available, and is often part of an optional software package that is not compatible with every collaborative robot. This confirms that automatic real–time payload identification without software interaction is not a standard feature of current collaborative platforms deployed in assembly and packaging contexts industries, representing a key limitation addressed by this thesis [14][15][16][17].

1.1.4 Weight assisting devices

Passive weight compensating manipulators are well established in industrial environments to help human workers perform their tasks in a more ergonomically sustainable way. These devices, if well calibrated, allow payloads to be moved around with minimal effort, offering passive, purely mechanically sourced weight compensation, effectively combining software–free and intuitive use. These manipulators however share a fundamental limitation; they only operate efficiently only within a pre-tuned weight range. The further a payload differs from the equilibrium point, the more force the human operator will have to deliver to move the load fixed to the manipulator. As a direct consequence, varying payloads that are too different in weight cannot be manipulated with these devices without manually re–tuning the counter–force system, for example counterweights and gas springs [18]. The proposed system replicates the intuitive, software–free interaction properties of a passive balancer, while adding real–time load identification and the possibility to perform autonomous tasks, integrating this solution into the production line. Some commercially available examples support this claim.

The company 3ARM produces commercially available weight compensating manipulators, an example of which shown in Figure 1.3. Pneumatic gas springs are used to compensate weights within a minimum and maximum payload limit. The gas springs can be manually tuned to compensate for different weight classes [19]. Figure 1.4 presents an example of a gas spring characteristic. By adjusting the filling pressure, the spring can optimized for different payloads scenarios [20].

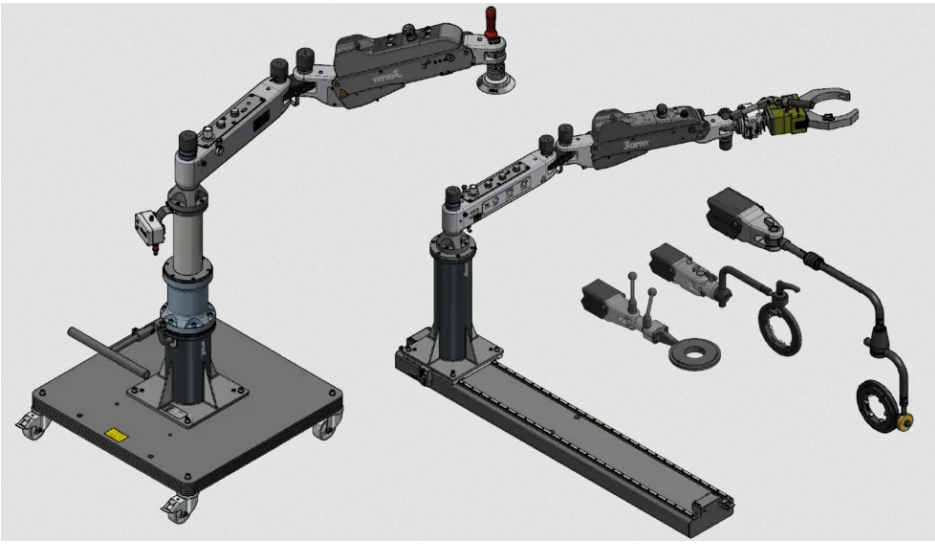

Figure 1.3: 3ARM manipulator [19].

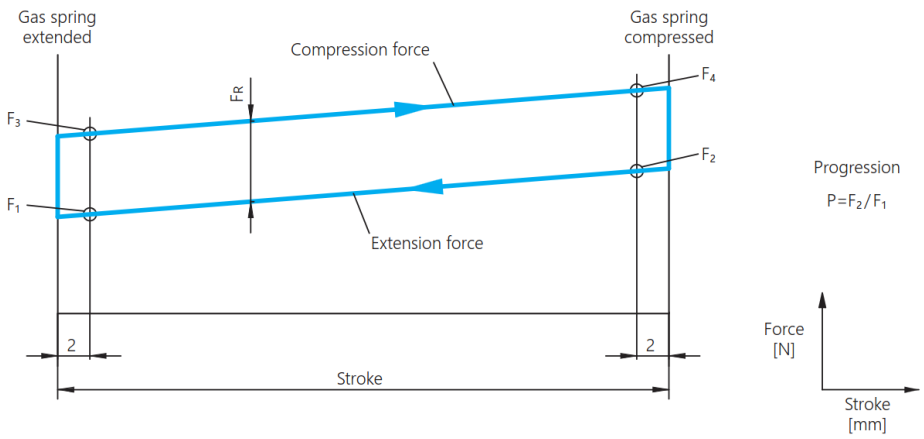

Figure 1.4: Gas spring characteristic by Suspa [20].

Transprotec offers spring balancers, showh in Figure 1.6, that are tuned to a specific weight, load changes are not permitted to guarantee safety and correct operation [21].

Figure 1.5: Spring balancer from Transprotec [21].

1.1.5 Intelligent Assist Devices

The robotic testbench proposed in this thesis belongs to the category of Intelligent Assist Devices (IADs). These are described as computer–controlled, servo–driven tools that enable human workers to manipulate payloads in a safe and ergonomic way. This differentiates IADs from the devices described in Section 1.1.4, which were completely passive. IADs were introduced to increase productivity and mitigate non–ergonomic work environments, a major issue in societies with an aging workforce. Currently, the term IADs is not commonly used anymore, as it has been subsumed under the modern term collaborative robots [22]. When IADs are mentioned today, they primarily appear as overhead gantry–mounted installations. While IADs can be effective in dedicated production cells with sufficient overhead clearance, they are unsuitable for industrial environments where ceiling height is limited, or overhead obstructions are present.

IADs cannot only interact safely and compliantly with human operators, but can also actively follow a predefined path. An example of this semi–autonomous strategy can be found in the automotive industry, where the controller guides the payload along a moving assembly line so that the human operator can focus on correctly installing the part into the assembly, rather than continuously repositioning the payload, as shown in Figure 1.6[23][24].

Figure 1.6: IAD integrated in an assembly line [24].

1.2 Problem Statement

Non–ergonomic load handling is the primary cause of musculoskeletal disorders in packaging and assembly industries. Passive weight compensating devices are well established in industry with the goal of reducing this physical strain on the human body; these devices however cannot adapt to varying payloads and provide no sensing, intelligence, or active integration with production lines.
Intelligent assist devices offer semi–autonomous advantages to support payload manipulation. Gantry–style implementation cannot be used in buildings with limited ceiling heights or overhead obstructions. IADs are semi–autonomous solutions and can thus offer a higher degree of integration than passive devices.
Collaborative robots require frequent software interaction to calibrate the system for different payloads or work modes. Although rare, it is possible for specific collaborative robots to go through predefined motions to estimate the weight of a payload rigidly attached to the end–effector, which also requires software programming and confirmation. Payloads also need to be fixed to the end–effector, which is not always possible for loads that vary in shape and size.
This thesis presents a three degree of freedom robotic testbench using novel, inherently compliant transmissions. This allows for the combination of an intrinsically safe design with real–time weight measurements and intuitive, software–free hand guidance at any point along the arm structure. This approach aims to combines the strengths of collaborative robots with passive or intelligent assist devices.
The testbench provides a weight–optimized platform that allows for further validation of the novel transmission, offering data acquisition and a configurable controller written in C++ specifically for the approach of this thesis.

1.3 Thesis Outline

In Chapter 2, the theoretical background on concepts relevant to this thesis is introduced, followed by an overview of the current state of the art in collaborative load–handling systems.

In Chapter 3, the design of the robotic testbench is presented; this includes the mechanical design, hardware implementation, proposed controller, and data communication architecture.

In Chapter 4, the developed testbench and proposed controller are experimentally validated; this includes mechanical design validation and controller performance evaluation in interactive load–handling experiments.

Chapter 5 summarizes the main conclusions of this thesis, discusses limitations of the proposed system, and presents possible improvements for future development.

Chapter 2

Literature Review

2.1 Theoretical Background

2.1.1 Impedance control

Impedance control is used in most workspaces that involve human–robot interaction. The interaction forces of the robotic structure with the environment can be regulated by adjusting the felt mechanical impedance. Mechanical impedance can be defined as the ratio of the output force to the input velocity. It represents how much the robotic structure resists motion when an external force is applied.

$$Z(s) = \frac{F(s)}{v(s)} \tag{2.1}$$

As its inverse, mechanical admittance can be defined as the ratio of input velocity to the output force.

$$Y(s) = \frac{v(s)}{F(s)} = \frac{1}{Z(s)} \tag{2.2}$$

The robotic structure generates reaction forces in response to deviations from its current position due to effects like friction and inertia. The environment, on the other hand, typically moves or deforms when external forces are applied. This concept becomes clear when imagining a trolley, which moves in response to the applied force, or compressing a pillow, which deforms under pressure. Consequently, the robotic structure is generally expected to behave as an impedance, while the environment behaves as an admittance. However, this destinction depends on the mechanical properties of both the robotic structure and the environment, as well as the modeled interaction between them. Figure 2.1 illustrates a stiff robotic structure interacting with its environment. The schematic at the end–effector demonstrates how impedance control can modify the apparent impedance perceived by the environment.

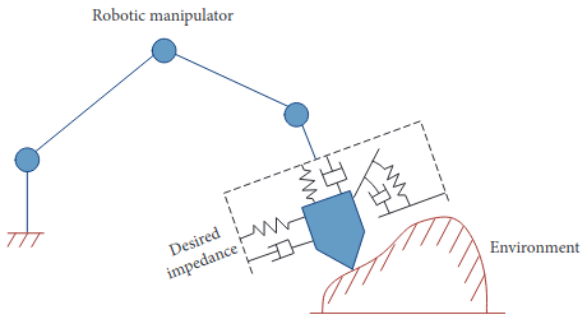

Figure 2.1: Impedance control for robotic structure in contact with an environment [25].

Impedance control mirrors the ability of the human body to change its mechanical impedance by tensioning its muscles. To guarantee safe interaction between a robotic structure and its environment, one of the two bodies should be compliant relative to the other. Most collaborative robots lack the ability to dynamically change their mechanical impedance. Therefore, safe interaction between between a robot and an unknown environment cannot be guaranteed. Impedance control allows for a user–defined, dynamic relationship between the trajectory of the end–effector and the contact forces from the environment; allowing stiff robotic structures to compliantly react to their environment.
The mathematical derivation for impedance control starts by considering a second–order system:

$$m\,\ddot{x} + b\,\dot{x} + k\,x = u + f_e \tag{2.3}$$

In this equation, m represents the system mass, b the damping coefficient, k the stiffness coefficient,, u the control input generated by the controller, and f_e is an external force applied to the system. As stated before, the idea behind impedance control is to change the apparent impedance of a mechanical system. By defining a target impedance, the mechanical impedance of the system can be modified.

$$m_d\,(\ddot{x} - \ddot{x}_r) + b_d\,(\dot{x} - \dot{x}_r) + k_d\,(x - x_r) = f_e, \tag{2.4}$$

In equation 2.4, m_d, b_d, and k_d respectively represent the desired inertia, damping, and stiffness of the system. Force–based impedance control and position–based impedance control are

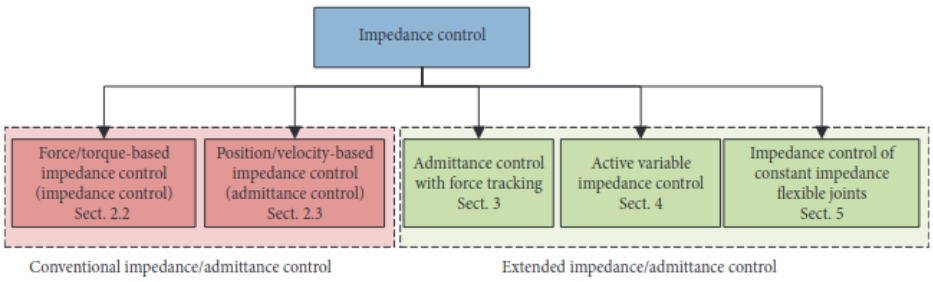

Figure 2.2: General classification of the impedance control approaches [25].

The conventional approaches are discussed in this thesis, since this suffies for a conceptual understanding of the concept.

Force–based impedance control In force–based impedance control, the control input generated by the controller u, is a force or torque. Substituting (2.4) into plant dynamics (2.3), the following control system is derived.

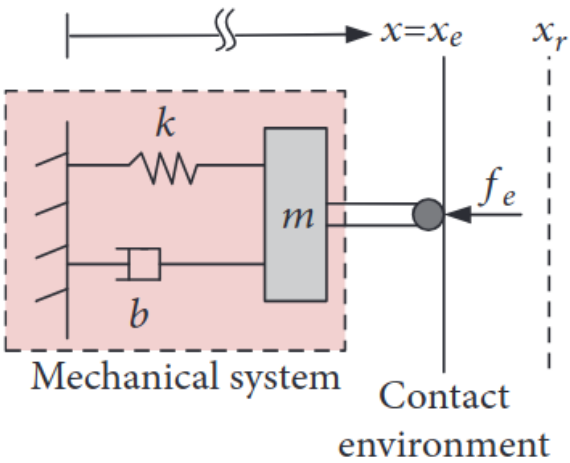

Figure 2.3: Mass–spring–damper system[25].

Position/velocity–based impedance control

2.2 State of the Art

Impedance control is a control strategy used for collaborative robots. It allows stiff robotic arms to react in a safe, compliant manner to external disturbances. The controller reacts to motion deviation by generating forces. There are two conventional impedance controlers that are discussed in this thesis, which is enough to grasp the general idea of this concept. A general classification of impedance control approaches is shown in Figure 2.3.

2.2.1 Series elastic actuator

2.2.2 Disturbance observer

2.2.3 ROS

2.2.4 Docker

Example equation:

$$\tau = K_s \, \theta_s \tag{2.5}$$

2.3 State of the Art

Chapter 3

Methodology

3.1 System Overview and Requirements

3.2 Mechanical Design

3.3 Hardware Architecture

3.3.1 CAN Bus Topology

3.3.2 Sensor Architecture

3.4 Sensor and Actuator Modeling

3.4.1 SET Spring Model

3.4.2 Motor and Transmission Model

3.5 Control Architecture

3.5.1 State Machine

3.5.2 Gravity Compensation and Floating Mode

3.5.3 Weighing Mode

3.5.4 Carrying Mode

3.5.5 Put-Down Mode

3.6 Software Implementation

3.6.1 Real-Time Architecture

Example code listing:

```
while (running) {
    clock_nanosleep(...);
    // your code here
}
```

Listing 3.1: Example listing.

3.6.2 Configuration

Chapter 4

Validation and Results

4.1 Experimental Setup

4.1.1 Hardware Configuration

4.1.2 Parameter Identification

4.2 Spring and Sensor Characterization

4.3 Controller Performance

4.4 Assisted Load Handling Evaluation

4.5 Discussion

Example table:

Table 4.1: Example results table.

Metric	Target	Achieved
Value 1	X	Y
Value 2	X	Y

Chapter 5

Conclusion and Future Work

5.1 Conclusion

5.2 Future Work

References

[1] B. Oral, Y. Solak, and H. Durmuş, "Evaluation of absenteeism and presenteeism status of factory employees," *WORK: A Journal of Prevention, Assessment & Rehabilitation*, vol. 79, no. 1, pp. 449–457, Sep. 11, 2024, ISSN: 1051-9815, 1875-9270. DOI: 10.3233/WOR-230642. [Online]. Available: https://journals.sagepub.com/doi/10.3233/WOR-230642 (visited on 02/01/2026).

[2] A. Yassi, "Repetitive strain injuries," *THE LANCET*,

[3] R. C. Vilella and A. K. R. Reddivari, "Musculoskeletal Examination,"

[4] IBV, "Musculoskeletal disorders caused by the most common job demands and ergonomic risks," 2017. [Online]. Available: https://ec.europa.eu/programmes/erasmus-plus/project-result-content/c7cc4b4d-52c9-4b5e-a282-46f53f5f5e98/D2.1.MSDs_job_demands_Revised.pdf.

[5] V. Gorasso, J. Van Der Heyden, R. De Pauw, I. Pelgrims, E. M. De Clercq, K. De Ridder, S. Vandevijvere, S. Vansteelandt, B. Vaes, D. De Smedt, and B. Devleesschauwer, "The health and economic burden of musculoskeletal disorders in Belgium from 2013 to 2018," *Population Health Metrics*, vol. 21, no. 1, p. 4, Apr. 21, 2023, ISSN: 1478-7954. DOI: 10.1186/s12963-023-00303-z. [Online]. Available: https://pophealthmetrics.biomedcentral.com/articles/10.1186/s12963-023-00303-z (visited on 02/01/2026).

[6] M. Bender, M. Braun, P. Rally, and O. Scholtz, "Lightweight robots in manual assembly - best to start simply!" Fraunhofer institute for industrial engineering, 2016, p. 63. [Online]. Available: https://publica-rest.fraunhofer.de/server/api/core/bitstreams/961b5036-c442-47db-84a6-b5334b4c1221/content.

[7] European Parliament. Directorate General for Parliamentary Research Services., *Analysis Exploring Risks and Opportunities Linked to the Use of Collaborative Industrial Robots in Europe.* LU: Publications Office, 2023. DOI: 10.2861/021129. [Online]. Available: https://data.europa.eu/doi/10.2861/021129 (visited on 04/17/2026).

[8] M. J. Rosenstrauch, T. J. Pannen, and J. Krüger, "Human robot collaboration - using kinect v2 for ISO/TS 15066 speed and separation monitoring," *Procedia CIRP*, vol. 76, pp. 183–186, 2018, ISSN: 22128271. DOI: 10.1016/j.procir.2018.01.026. [Online]. Available: https://linkinghub.elsevier.com/retrieve/pii/S2212827118300404 (visited on 02/02/2026).

[9] P. Chemweno, L. Pintelon, and W. Decre, "Orienting safety assurance with outcomes of hazard analysis and risk assessment: A review of the ISO 15066 standard for collaborative robot systems," *Safety Science*, vol. 129, p. 104 832, Sep. 2020, ISSN: 09257535. DOI: 10.1016/j.ssci.2020.104832. [Online]. Available: https://linkinghub.elsevier.com/retrieve/pii/S0925753520302290 (visited on 04/15/2026).

[10] B. Siciliano and O. Khatib, Eds., *Springer Handbook of Robotics* (Springer Handbooks). Cham: Springer International Publishing, 2016, ISBN: 978-3-319-32550-7 978-3-319-32552-1. DOI: 10.1007/978-3-319-32552-1. [Online]. Available: https://link.springer.com/10.1007/978-3-319-32552-1 (visited on 04/14/2026).

[11] R. Gregor, A. Babinec, F. Duchoň, and M. Dobiš, "Hand Guiding a Virtual Robot Using a Force Sensor," *Acta Mechanica et Automatica*, vol. 15, no. 3, pp. 177–186, Sep. 1, 2021, ISSN: 2300-5319. DOI: 10.2478/ama-2021-0023. [Online]. Available: https://www.sciendo.com/article/10.2478/ama-2021-0023 (visited on 02/03/2026).

[12] A. Hameed, A. Ordys, J. Możaryn, and A. Sibilska-Mroziewicz, "Control System Design and Methods for Collaborative Robots: Review," *Applied Sciences*, vol. 13, no. 1, p. 675, Jan. 3, 2023, ISSN: 2076-3417. DOI: 10.3390/app13010675. [Online]. Available: https://www.mdpi.com/2076-3417/13/1/675 (visited on 02/03/2026).

[13] E. Montini, F. Daniele, L. Agbomemewa, M. Confalonieri, V. Cutrona, A. Bettoni, P. Rocco, and A. Ferrario, "Collaborative Robotics: A Survey From Literature and Practitioners Perspectives," *Journal of Intelligent & Robotic Systems*, vol. 110, no. 3, p. 117, Aug. 6, 2024, ISSN: 1573-0409. DOI: 10.1007/s10846-024-02141-z. [Online]. Available: https://link.springer.com/10.1007/s10846-024-02141-z (visited on 02/03/2026).

[14] "UR30 Collaborative Robot | 35 kg Payload Cobot | Universal Robots." (), [Online]. Available: https://www.universal-robots.com/products/ur30/ (visited on 04/19/2026).

[15] "Collaborative Robots (Cobots) | FANUC America," fanucamerica. (), [Online]. Available: https://www.fanucamerica.com/products/robots/series/collaborative-robot (visited on 04/19/2026).

[16] S. M. Group. "Hand Guiding Robots." (Dec. 1, 2021), [Online]. Available: https://www.techbriefs.com/component/content/article/40390-hand-guiding-robots (visited on 04/19/2026).

[17] "Configuring FANUC Robot Payload & Collision Guard Settings," Industrial Monitor Direct. (Apr. 11, 2026), [Online]. Available: https://industrialmonitordirect.com/blogs/knowledgebase/fanuc-robot-payload-collision-guard-configuration-guide (visited on 04/19/2026).

[18] V. Arakelian, "GRAVITY COMPENSATION IN ROBOTICS – A REVIEW," 2019.

[19] "Industrial Lift Assist Devices for Manufacturing | 3ARM®," 3ARM - Tool Balancers & Manipulators Arms. (), [Online]. Available: https://toolbalancerarms-3arm.com/ (visited on 04/20/2026).

[20] "Catalogues, user manuals, certificates and further downloads from SUSPA." (), [Online]. Available: https://www.suspa.com/in/downloads (visited on 04/20/2026).

[21] "Spring balancer & balancer - ideal for the ergonomic workplace," transprotec. (), [Online]. Available: https://www.transprotec.de/ (visited on 04/20/2026).

[22] *Cobot*, in *Wikipedia*, Apr. 11, 2026. [Online]. Available: https://en.wikipedia.org/w/index.php?title=Cobot&oldid=1348168033#cite_note-22 (visited on 04/21/2026).

[23] "Industrial Manipulators and load handling solutions," Indeva Group. (), [Online]. Available: https://www.indevagroup.com/industrial-manipulators/ (visited on 04/20/2026).

[24] J. Colgate, M. Peshkin, and S. Klostermeyer, "Intelligent assist devices in industrial applications: A review," in *Proceedings 2003 IEEE/RSJ International Conference on Intelligent Robots and Systems (IROS 2003) (Cat. No.03CH37453)*, vol. 3, Las Vegas, Nevada, USA: IEEE, 2003, pp. 2516–2521, ISBN: 978-0-7803-7860-5. DOI: 10.1109/IROS.2003.1249248. [Online]. Available: http://ieeexplore.ieee.org/document/1249248/ (visited on 04/20/2026).

[25] H. F. N. Al-Shuka, S. Leonhardt, W.-H. Zhu, R. Song, C. Ding, and Y. Li, "Active Impedance Control of Bioinspired Motion Robotic Manipulators: An Overview," *Applied Bionics and Biomechanics*, vol. 2018, pp. 1–19, Oct. 18, 2018, ISSN: 1176-2322, 1754-2103. DOI: 10.1155/2018/8203054. [Online]. Available: https://www.hindawi.com/journals/abb/2018/8203054/ (visited on 04/10/2026).

2D Manufacturing Drawings

.1 CNC Part 1

.2 CNC Part 2

.3 CNC Part 3

Additional Experimental Results

Source Code

https://github.com/username/repository