Real-Time Driver and Road Monitoring for Risk Prediction

Member 1 – D.L.R Dilochana

Fatigue Detection System for Long-Term Driver Monitoring

Component objective

The objective of this component is to develop a single-module fatigue detection system capable of identifying early signs of driver fatigue through long-term performance monitoring. The system aims to enhance road safety by providing real-time analysis of the driver's condition using a combination of physiological, behavioral, and environmental data.
Key variables include:

- **Heart rate variability** – to assess physical strain and stress levels.
- **Time-driven metrics** – to capture continuous driving duration and area.
- **Environmental conditions** – such as lighting and temperature.
- **Behavioral indicators** – including head position and facial expressions.

By analyzing these data points in real-time, the system indirectly estimates the driver’s level of exhaustion or onset of fatigue. Hardware sensors are used to capture raw signals, while supervised machine learning models process and interpret the data.
The final outcome is a fatigue risk score or alert that anticipates potential fatigue conditions, enabling proactive safety interventions. The entire process

is encapsulated within a single module to maintain efficiency, ease of integration, and consistent performance.

Literature Review References

[1] P. Thiffault and J. Bergeron, "Fatigue and individual differences in monotonous simulated driving," *Personality and Individual Differences*, vol. 34, no. 1, pp. 159-176, 2003.

[2] A. Sahayadhas, K. Sundaraj, and M. Murugappan, "Detecting driver drowsiness based on sensors: A review," *Sensors*, vol. 12, no. 12, pp. 16937-16953, 2012.

[3] J. F. May and C. L. Baldwin, "Driver fatigue: The importance of identifying causal factors of fatigue when considering detection and countermeasure technologies," *Transportation Research Part F: Traffic Psychology and Behaviour*, vol. 12, no. 3, pp. 218-224, 2009.

[4] S. K. L. Lal and A. Craig, "A critical review of the psychophysiology of driver fatigue," *Biological Psychology*, vol. 55, no. 3, pp. 173-194, 2001.

[5] M. R. Rosekind et al., "Fatigue in operational settings: Examples from the aviation environment," *Human Factors*, vol. 36, no. 2, pp. 327-338, 1994.

[6] J. A. Horne and L. A. Reyner, "Sleep related vehicle accidents," *BMJ*, vol. 310, no. 6979, pp. 565-567, 1995.

Novelty of the Component

This component primarily focuses on behavioral indicators for fatigue detection, this component introduces a novel approach by priority the role of **environmental conditions** in driver fatigue. Specifically, it considers factors such as the **time of day** (early morning, mid-afternoon, midnight), **driving context** (urban or highway), and **weather conditions**, all of which can significantly effect in fatigue levels. By analyzing these environmental variables, the system aims to provide a deeper understanding of external factors contributing to driver exhaustion.
Additionally, the system dynamically adjusts the influence (weights) of behavioral indicators, sensor reliability, and physiological data in real-time. This adaptive mechanism ensures

more accurate and context-aware fatigue prediction, enhancing the responsiveness of the detection model.

Final prediction = X*physiological + Y*behavioral + Z*environmental

X - physiological weight
Y - behavioral weight
Z - environmental weight

Above weights are calculated using the Fuzzy Logic System but in initially decide to adjust the weight using rule-based system

Datasets Available

1. **Facial Expression of Fatigues (FEF)**

Facial Expression of Fatigues (FEF)

Fatigue facial expressions filtered from FER+

https://www.kaggle.com/datasets/minhngt02/facial-expression-of-fatigues-fer

1. **For the Heart rate variability can be measured using ECG Module AD8232 Pulse Heart ECG Monitoring Sensor**

1. **For The Head pose Detection OpenCV Library use for Detection**

Component Diagram

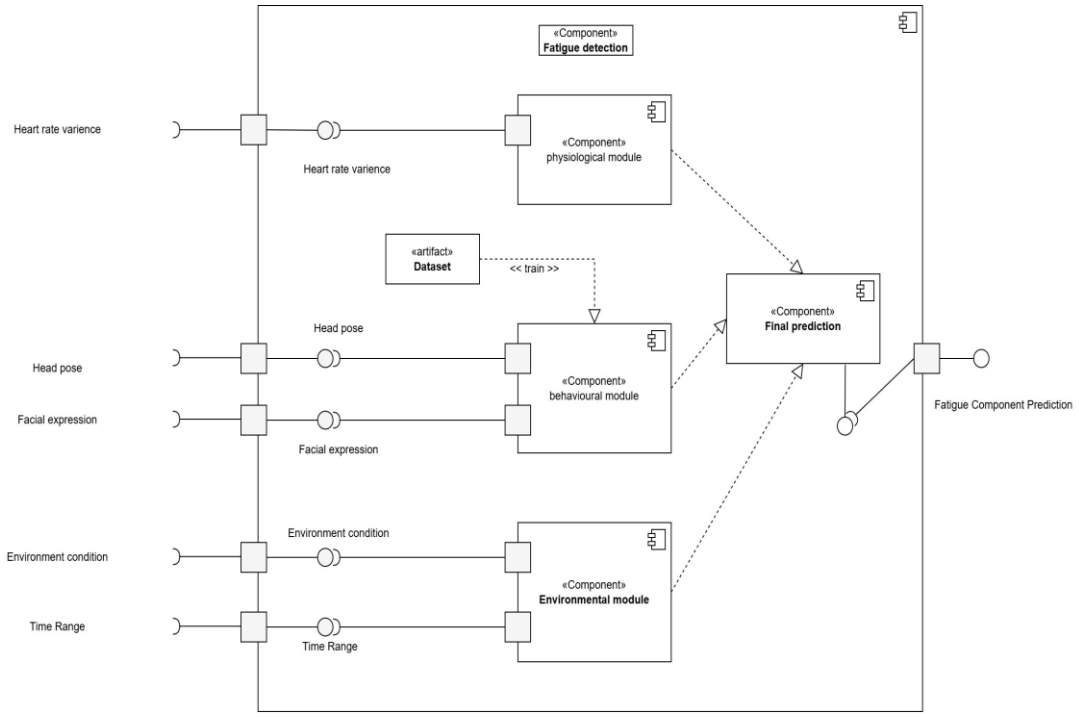

Member 2 – PINSARA T H A K

Multifactor Driver Drowsiness Risk Evaluation System

1. Component Objective

In this component, the objective is to build a multifactor drowsiness detection system that calculates a **drowsiness risk score** by dividing influencing factors into **two main categories**: **physical** and **environmental**.

- **Physical Factors**: Monitored via **real-world blood pressure** sensors to track changes in driver physiology that can indicate fatigue.
- **Environmental Factors**: Includes **ambient temperature**, **sunlight intensity**, and **ambient noise** levels, which are known to affect driver alertness.

By capturing and fusing these parameters, the system calculates a **composite risk score**. When this score exceeds a defined safety threshold, a **real-time alert** is issued to the driver through an ESP32-based alert system, reducing the chance of accidents caused by drowsiness.

This system supports proactive driver monitoring using real-world environmental and physiological sensor input, moving beyond traditional camera-only methods.

2. Literature Review References (IEEE Format)

[1] A. Sahayadhas, K. Sundaraj, and M. Murugappan, “Detecting driver drowsiness based on sensors: A review,” *Sensors*, vol. 12, no. 12, pp. 16937–16953, 2012.

[2] J. F. May and C. L. Baldwin, “Driver fatigue: The importance of identifying causal factors of fatigue when considering detection and countermeasure technologies,” *Transportation Research Part F: Traffic Psychology and Behaviour*, vol. 12, no. 3, pp. 218–224, 2009.

[3] S. K. L. Lal and A. Craig, “A critical review of the psychophysiology of driver fatigue,” *Biological Psychology*, vol. 55, no. 3, pp. 173–194, 2001.

[4] P. Thiffault and J. Bergeron, “Fatigue and individual differences in monotonous simulated driving,” *Personality and Individual Differences*, vol. 34, no. 1, pp. 159–176, 2003.

[5] M. Khandoker, K. A. M. Morshed, and T. K. Mandal, “Real-time detection of driver drowsiness using physiological and environmental data,” *IEEE International Conference on Computing and Communication Engineering*, 2021.

3. Novelty of the Component

While most drowsiness detection systems rely heavily on **facial recognition or blink detection**, this component introduces a **novel multi-sensor fusion approach** that combines **physiological and environmental data** for more accurate, real-world predictions.

Key novel aspects:

- Integration of **blood pressure monitoring** into drowsiness detection—rarely used in real-time driving systems.
- Use of **ambient conditions** (temperature, sunlight, noise) as direct contributors to fatigue prediction.
- A **weighted risk scoring algorithm** that dynamically adjusts to sensor inputs:

Drowsiness Risk Score= **X**·Physical + **Y**·Environmental

Where:

- **X**: Weight for physical input (e.g., blood pressure)
- **Y**: Weight for environmental input (e.g., temperature, light)

This scoring system ensures a **context-aware**, sensor-driven fatigue alert mechanism that improves reliability and minimizes false alarms.

4. Dataset Source and Relevance

- **Dataset**: Driver Drowsiness Dataset (DDD)
- **Source**: Kaggle, contributed by Ismail Nasri
- **Relevance**: This dataset contains **driver facial images** labeled with different states of alertness and drowsiness. While the current component extends beyond facial data, the dataset serves two purposes:
    - Baseline comparison for image-based drowsiness models.
    - Supplemental training data for evaluating correlations between facial features and sensor-based scores.

In addition, **custom real-time data** will be collected using:

- **Blood Pressure Sensor** (e.g., BMP180 + pulse modules)
- **DHT11 or BME680** for temperature and humidity
- **Light and noise sensors** (e.g., LDR + sound detection module)

These real-world inputs ensure that the model is **robust and practical for embedded deployment** in vehicle environments.

Component Diagram

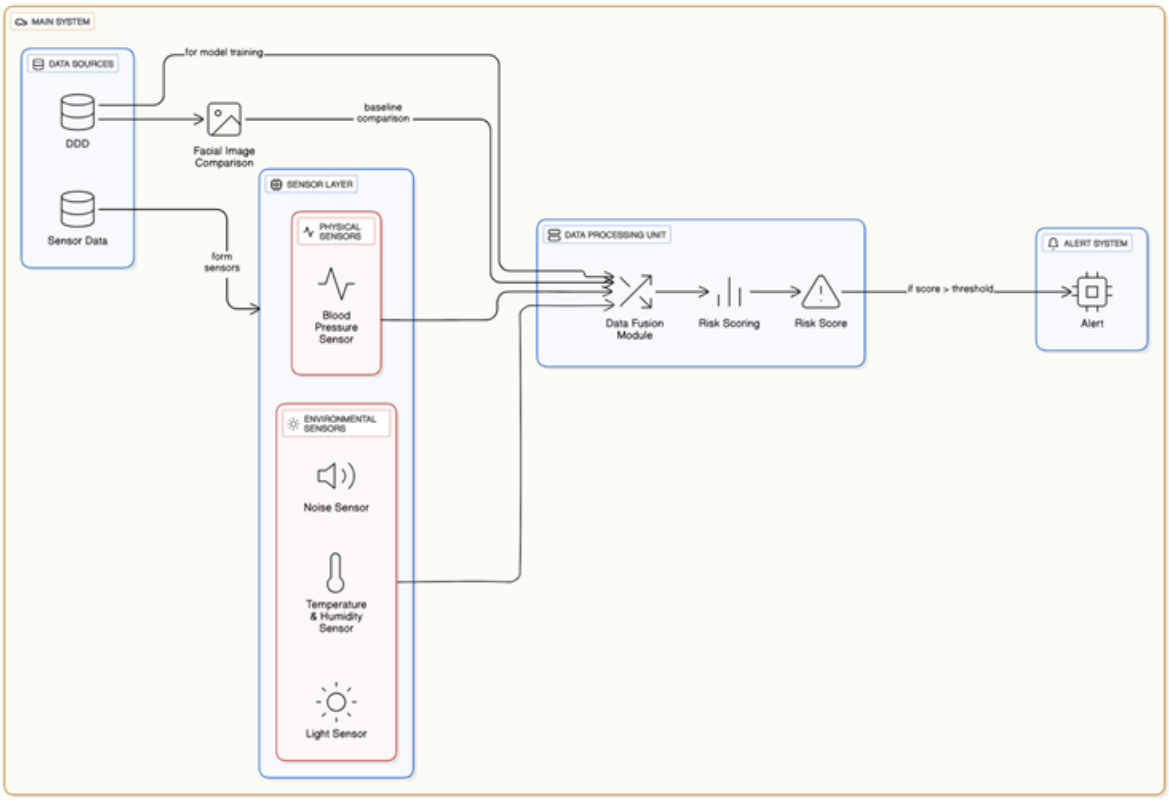

Member 3 – SAMODA T W O

Road Condition Monitoring

1. Component Objective

Design and implement a **Road Condition Monitoring** module for public bus service that:

- Continuously captures and analyses on- vehicle camera feeds, weather sensors, and vehicle speed.
- Detects and classifies road signs (especially speed limits), estimates road surface conditions (e.g. wet vs. dry), and tracks current speed.
- Issues real- time audio–visual warnings to the driver when a potential hazard is detected (e.g. entering a wet patch above allowed speed, unrecognized or overridden speed- limit sign).

2. Literature References (IEEE Format)

[1] S. Houben, J. Stallkamp, J. Salmen, M. Schlipsing, and C. Igel, “Detection of traffic signs in real- world images: The German Traffic Sign Detection Benchmark,” in *Proc. 2013 Int. Joint Conf. Neural Netw. (IJCNN)*, Dallas, TX, USA, pp. 1–8, 2013.

[2] A. Khandakar et al., “Harnessing Smartphone Sensors for Enhanced Road Safety: A Comprehensive Dataset and Review,” *arXiv preprint arXiv:2411.07315*, Nov. 11, 2024.

[3] A. Daud, M. Amo- Boateng, N. J. Owor, A. Aboah, and Y. Adu- Gyamfi, “Edge Computing- Enabled Road Condition Monitoring: System Development and Evaluation,” *arXiv preprint arXiv:2310.05321*, Oct. 9, 2023.

[4] S. Ma, X. Wu, L. Chen, and Y. Zhang, “Dataset of road surface images with seasons for machine learning,” *Data in Brief*, vol. 41, p. 107860, 2022.

3. Identified Novelty

- **Multi- modal Fusion on Edge:** Unlike typical systems limited to vision, this component fuses camera- based sign detection, MEMS- based wetness sensing (accelerometer/vibration patterns), and real- time weather API data—all processed on a low- latency edge device.
  Adaptive Speed Advisory: Dynamically computes a safe speed recommendation based on detected road wetness level and posted speed limit, rather than simply flagging violations.

4. Dataset Sources & Relevance

- **Sri Lanka Traffic Signs Dataset (SL- TSD)**
  – Source: Kaggle "Sri Lanka Traffic Signs Recognition" collection (≈12 000 images) and supplementary images from the Road Transport Authority portal.
  – Relevance: Provides locally accurate classes (e.g. Sinhala/Tamil legends, unique speed- limit signs, school-zone warnings) under Sri Lankan lighting and weather conditions—critical for training and validating the sign- detection submodule on true deployment data.
  https://universe.roboflow.com/group-11-mollt/road-traffic-sign-in-sri-lanka/images/00vHHH2C9q1CaoNI3OGr

- **Mapillary Vistas (Sri Lanka subset)**
  – Source: Mapillary Vistas dataset, filtering by GPS bounds over Sri Lanka
  – Relevance: Supplies additional real- world frames with traffic- sign instances in urban, rural, and highway scenes—improves robustness against complex backgrounds.
- **Dataset of Road Surface Images with Seasons**
  – Source: Ma et al., Data in Brief, vol. 41, 2022
  – Relevance: Labeled dry vs. wet pavement examples across climates; ideal for pre- training the wet- road classifier under monsoon and dry- season conditions.
- **Sensor Road- Safety Dataset**
  – Source: Khandakar et al., arXiv:2411.07315
  – Relevance: Accelerometer, gyroscope, GPS traces under seven weather conditions; useful if extending wetness detection via vibration patterns alongside vision.

5. Component Diagram

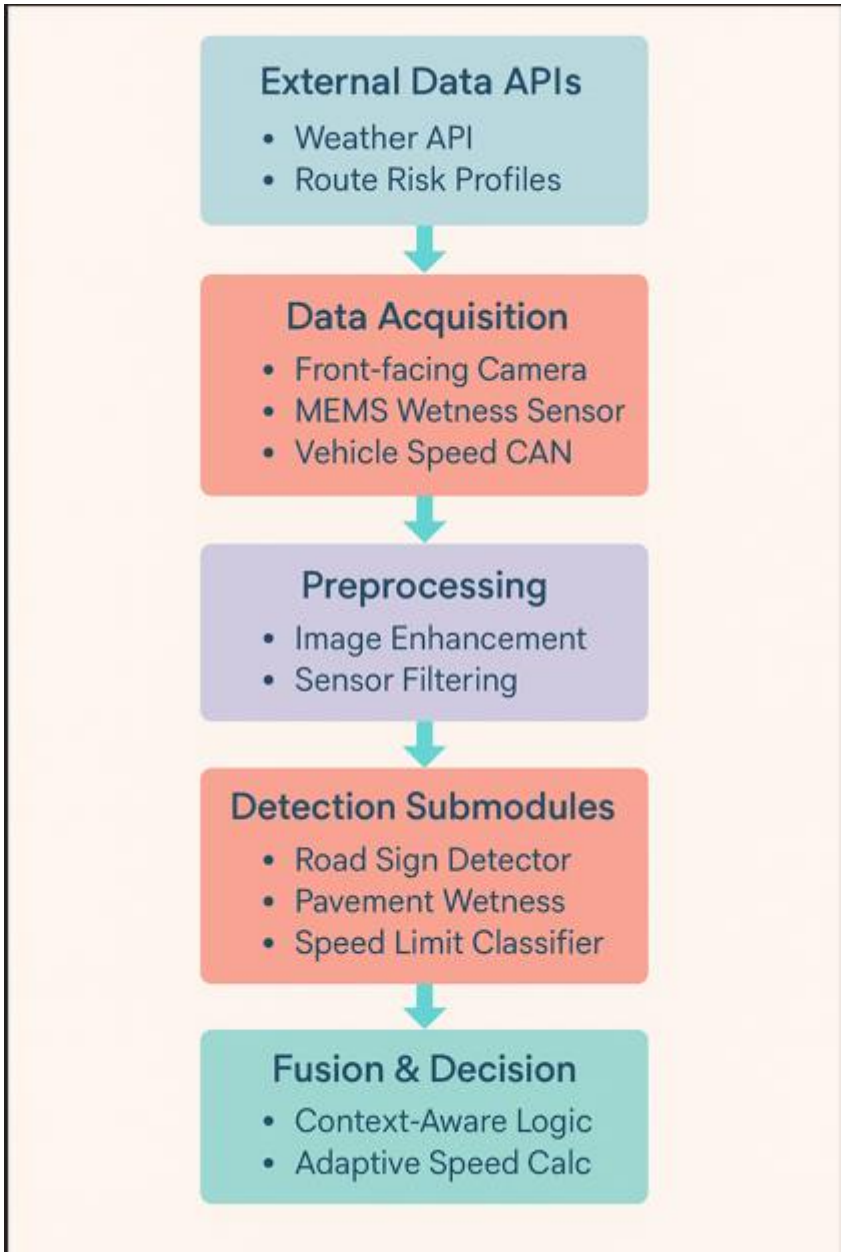

Member 4 – Senadheera S C C

Personalized Driver Behavioural Deviation Detection

1. Component objective

The objective of this component is to develop a system that can learn and model the individual driving behavior of each driver over time, in order to detect deviations that may indicate risky, abnormal, or distracted driving. Unlike static rule-based alert systems, this module aims to provide personalized feedback and alerts, making the system more adaptive and intelligent. It enhances driver safety by learning the user's typical driving style during an initial learning phase and issuing alerts when future behavior significantly deviates from the learned patterns.

Additionally, the system will:

- Allow users to select their driving experience level (e.g., beginner, intermediate, expert), enabling semi-personalized alerts even during the learning phase.
- Continuously collect and process data on speed patterns, acceleration & braking behavior, and steering behavior.
- Transition to a fully personalized risk detection model after the initial learning period.

Data Type	Sensors / Data Source	Processing Method	Usage in Deviation Detection
Speed	GPS module (smartphone/vehicle), OBD-II speed sensor	- Filter raw speed data (remove GPS noise) - Calculate avg. speed & variance - Detect over-speed events	Compare current speed range with driver's baseline; detect sudden changes in speed patterns
Acceleration	Accelerometer (smartphone, IoT device), OBD-II accelerometer	-Compute acceleration in m/s^2 -Smooth data using moving average filter -Identify aggressive acceleration peaks	Identify deviation in acceleration habits (e.g., normally gradual, now sudden/aggressive)
Braking (Deceleration)	Accelerometer, OBD-II brake pressure sensor	- Calculate negative acceleration (deceleration) - Detect harsh braking events based on threshold	Detect increase in frequency/intensity of harsh braking compared to baseline
Steering Behavior	Steering angle sensor (CAN bus), gyroscope	- Track steering angle in degrees - Count steering corrections per minute - Detect sharp turns/swerves	Identify abnormal steering patterns (erratic, frequent overcorrections)
Driving Experience Level	User input via app interface	- Store as initial profile parameter - Adjust detection sensitivity during learning phase	Prevent false alerts by calibrating thresholds based on experience level

2. Reference of the literature reviewed (in IEEE format)

[1] J. A. Healey and R. W. Picard, "Detecting stress during real-world driving tasks using physiological sensors," *IEEE Transactions on Intelligent Transportation Systems*, vol. 6, no. 2, pp. 156-166, Jun. 2005.

[2] C. Miyajima et al., "Driver modeling based on driving behavior and its evaluation in driver identification performance," *Proceedings of the IEEE*, vol. 95, no. 2, pp. 427-437, Feb. 2007.

[3] D. A. Johnson and M. M. Trivedi, "Driving style recognition using a smartphone as a sensor platform," *in Proc. IEEE Intelligent Transportation Systems Conference*, pp. 1609-1615, 2011.

[4] B. Aygun et al., "Naturalistic driving datasets and machine learning for driver behavior analysis: A systematic review," *IEEE Access*, vol. 10, pp. 61926-61947, 2022.

[5] Y. Liang et al., "Real-time detection of driver cognitive distraction using support vector machines," *IEEE Transactions on Intelligent Transportation Systems*, vol. 8, no. 2, pp. 340-350, Jun. 2007.

[6] S. M. Arvin et al., "Driver behavior detection and classification using deep learning," *Expert Systems with Applications*, vol. 149, pp. 113240, Jul. 2020.

[7] A. Doshi and M. M. Trivedi, "On the roles of eye gaze and head dynamics in predicting driver's intent to change lanes," *IEEE Transactions on Intelligent Transportation Systems*, vol. 10, no. 3, pp. 453-462, Sep. 2009.

[8] F. Tango and M. Botta, "Real-time detection system of driver distraction using machine learning," *IEEE Transactions on Intelligent Transportation Systems*, vol. 14, no. 2, pp. 894-905, Jun. 2013.

[9] K. Li et al., "A comprehensive review of machine learning-based driving behavior analysis," *IEEE Transactions on Intelligent Vehicles*, vol. 7, no. 1, pp. 15-32, Mar. 2022.

[10] M. Chen et al., "Personalized driver behavior modeling using smartphone sensors and machine learning," *IEEE Sensors Journal*, vol. 21, no. 18, pp. 20537-20547, Sep. 2021.

[11] R. Zhang et al., "Anomaly detection in driver behavior using one-class support vector machines," *Transportation Research Part C: Emerging Technologies*, vol. 89, pp. 118-133, Apr. 2018.

[12] L. Wang et al., "Individual driving behavior analysis and prediction using longitudinal smartphone sensor data," *IEEE Transactions on Vehicular Technology*, vol. 70, no. 4, pp. 3098-3110, Apr. 2021.

3. Identified novelty

Most existing systems use the same fixed rules for all drivers (e.g., “alert if speed > X”), often focusing on only one type of driving behavior. They do not adapt to the personal style of each driver, which can lead to too many irrelevant alerts that drivers may ignore.

Problem: Drivers have very different “normal” styles. A behavior that’s dangerous for one driver might be typical for another.

Example:

- Driver A always drives very smoothly.
- Driver B is a bit aggressive but consistent and still safe.
- A sudden aggressive acceleration might be normal for B, but a clear risk for A.

Existing systems don't detect that personal-level deviation.

Our approach offers:

1. **Learns Each Driver’s Style** –
   The system observes how a driver usually drives during an initial learning phase, building a personal profile to make alerts more accurate and relevant.
2. **Driving Experience Levels** –
   During the learning phase, drivers can choose their experience level (beginner, intermediate, expert). This adjusts the system’s alert sensitivity from the start, making it more suitable for different skill levels.
3. **Multi-Behavior Analysis** –
   The system monitors speed patterns, acceleration/braking, and steering together. Many other systems focus on only one of these, missing important changes in driving style.
4. **Continuous Adaptation** –
   Driving habits can change over time as the driver gains experience or changes their

style. The system keeps updating the driver's profile regularly to remain accurate and useful.

In short: This system moves from **static, one-size-fits-all rules** to an **adaptive, multi-behavior, personalized approach** that stays effective over time.

4. The source of the identified dataset and its relevancy to my task

- ✓ PDB (Personalized Driving Behavior) Dataset:
  - Specifically designed for personalized driver analysis.
  - Includes synchronized LiDAR, camera, IMU, CAN bus data, driver physiological signals.
  - Data is collected with the same vehicle and route among several drivers to minimize environmental variability.
  - Annotations allow studying how driving style and deviation are unique to individuals.

- ✓ DMD (Driver Monitoring Dataset):
  - Focused on monitoring driver states with multiple sensors for abnormal behavior research.

- ✓ Multi-Class Driver Behavior Data:
  - Various datasets on platforms like Mendeley and Kaggle contain labeled events (normal, aggressive, distracted).
  - Can be processed to establish driver-specific baselines.

- ✓ GPS-based Real Driving Datasets:
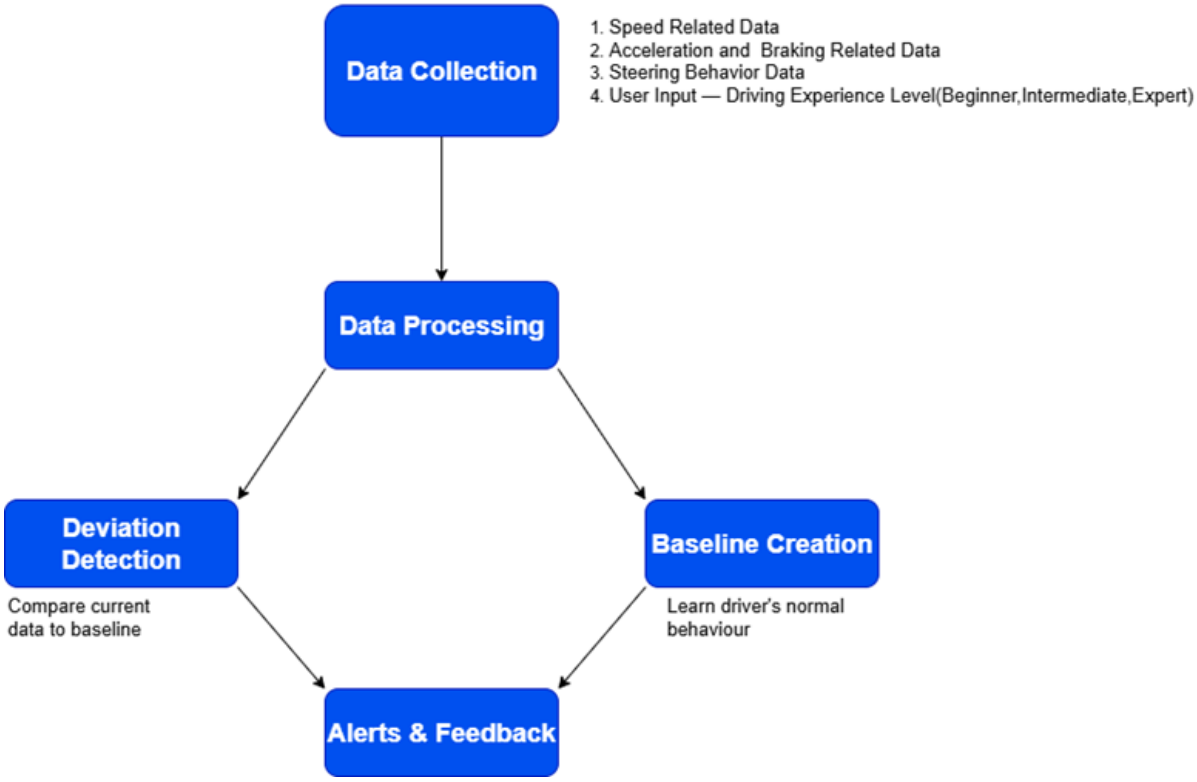
- Provide annotated normal/abnormal instances from real-world GPS and vehicle data, useful for trajectory and cluster-based deviation analysis.