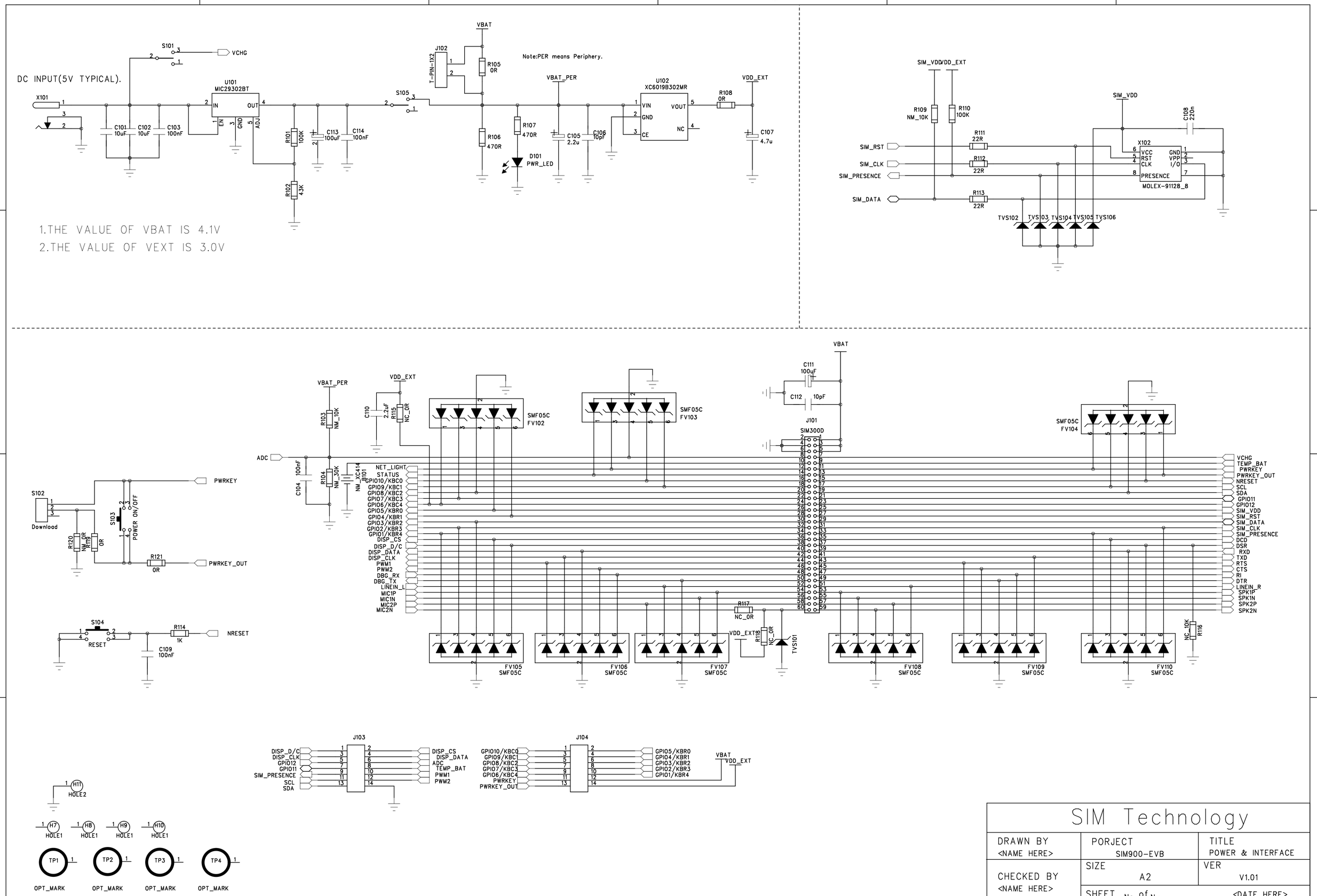

SIM Technology		
DRAWN BY <NAME HERE>	PORJECT SIM900-EVB	TITLE POWER & INTERFACE
CHECKED BY <NAME HERE>	SIZE A2	VER V1.01
	SHEET No of No	<DATE HERE>

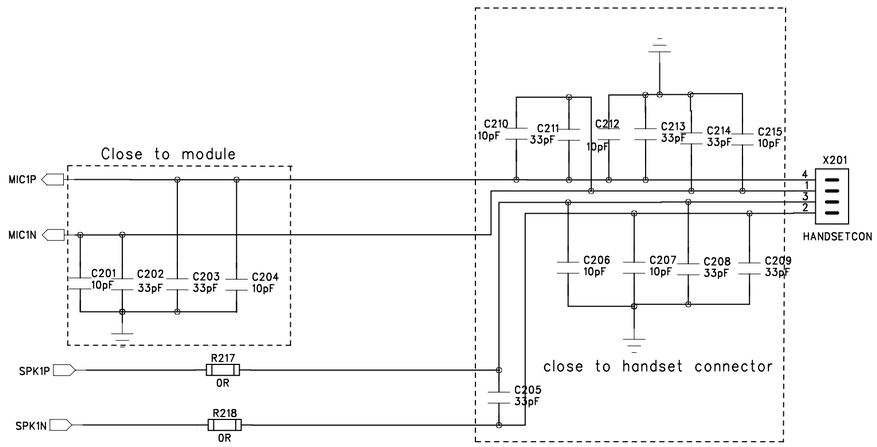

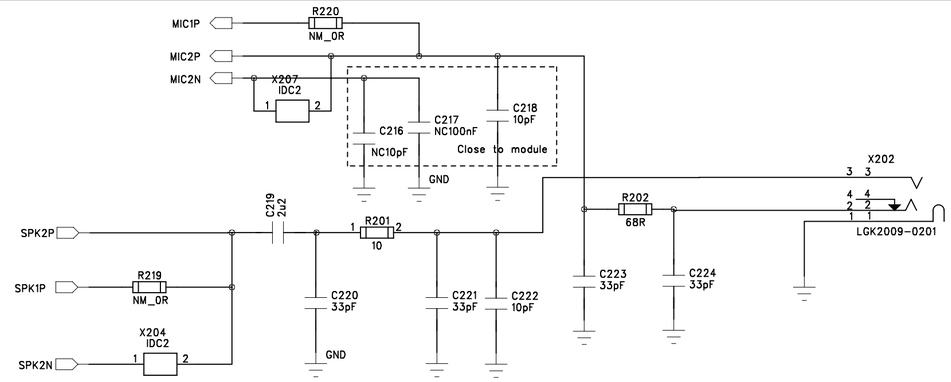

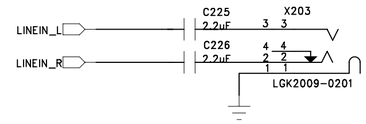

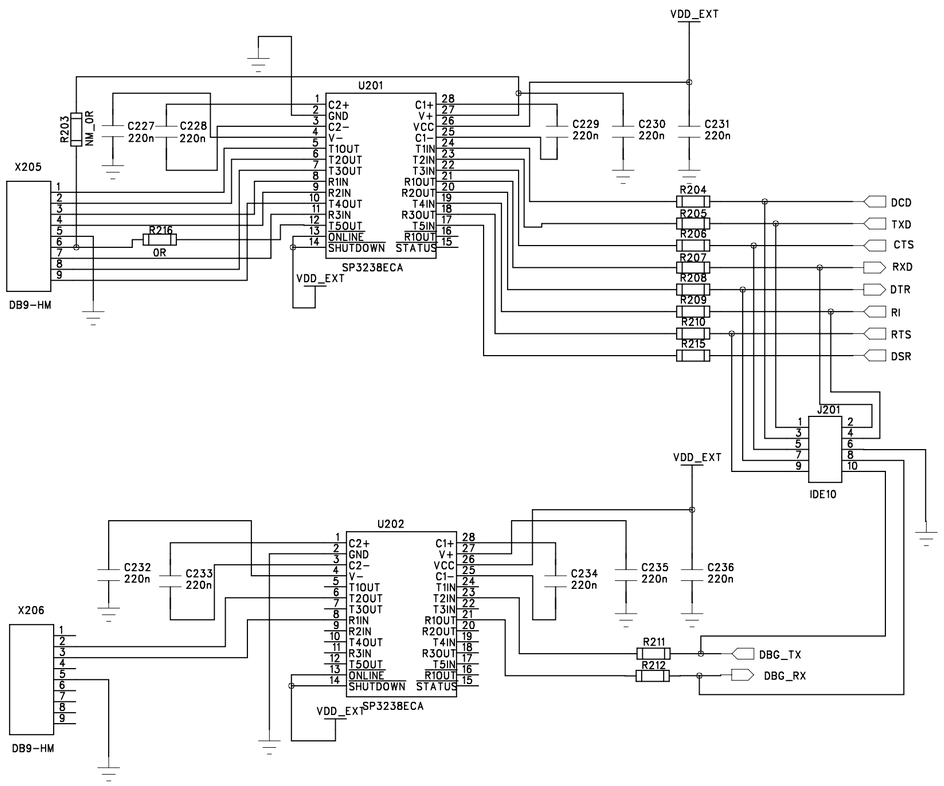

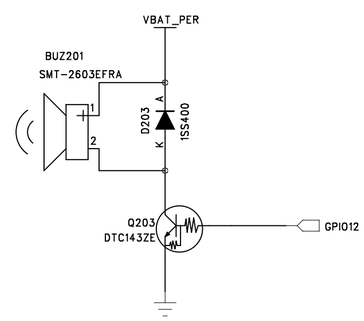

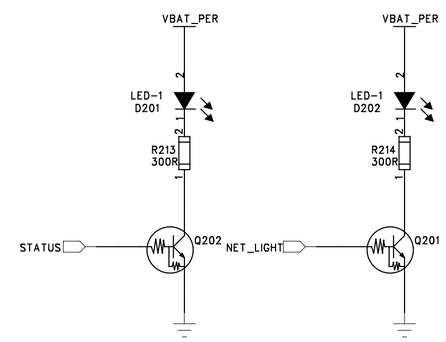

SIM Technology		
DRAWN BY <NAME HERE>	PORJECT <PROJECT NAME HERE>	TITLE <TITLE NAME HERE>
CHECKED BY <NAME HERE>	SIZE A2	VER <NO>
	SHEET No of No	<DATE HERE>