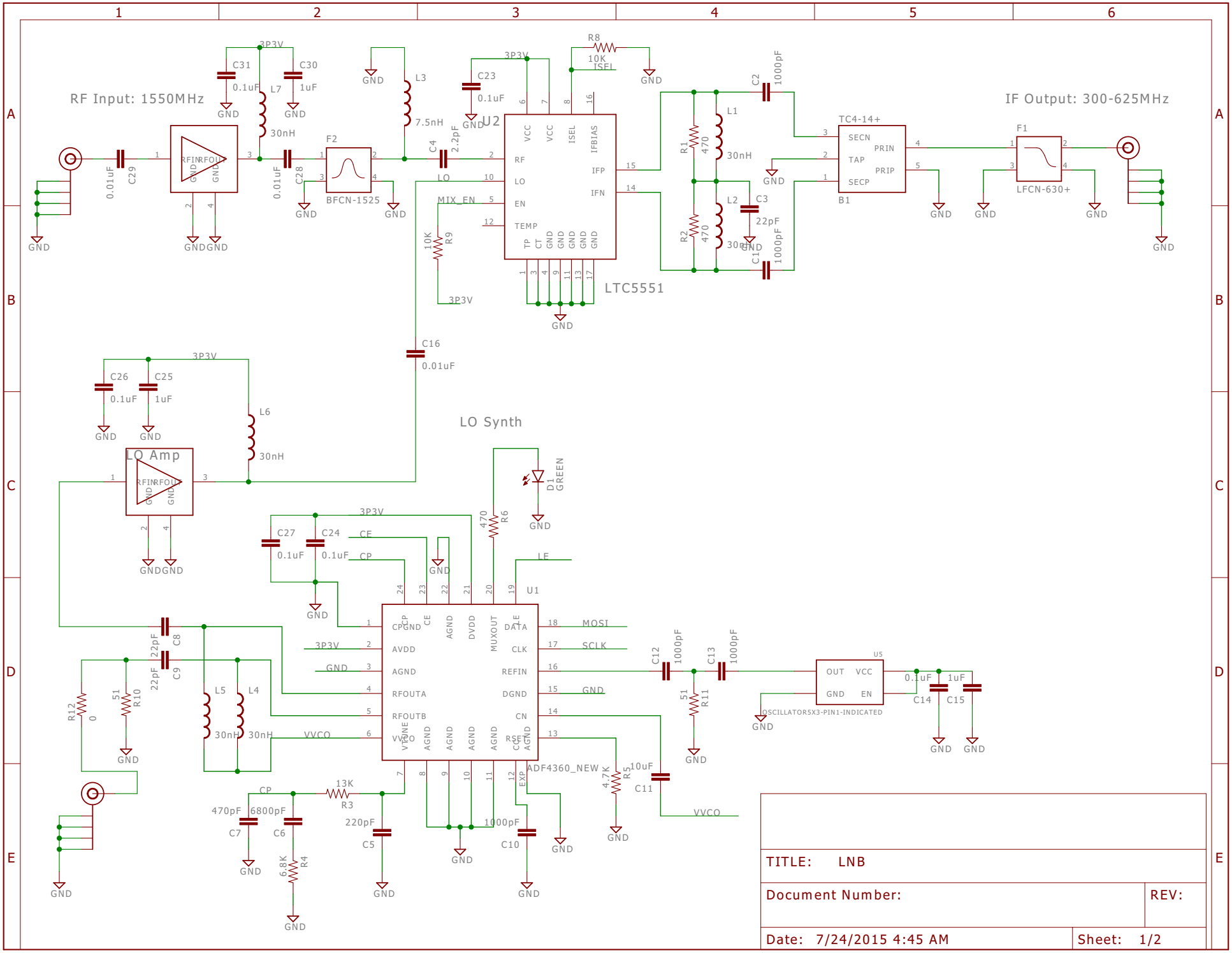
RF Input: 1550MHz
IF Output: 300-625MHz
LTC5551
U2
BFCN-1525
F2
LFCN-630+
F1
TC4-14+
B1
LO Amp
LO Synth
ADF4360_NEW
U1
U5
OSCILLATOR5X3-PIN1-INDICATED
D1 GREEN
3P3V
GND
MIX_EN
LO
CE
CP
LE
MOSI
SCLK
VVCO
TITLE: LNB
Document Number:
REV:
Date: 7/24/2015 4:45 AM
Sheet: 1/2

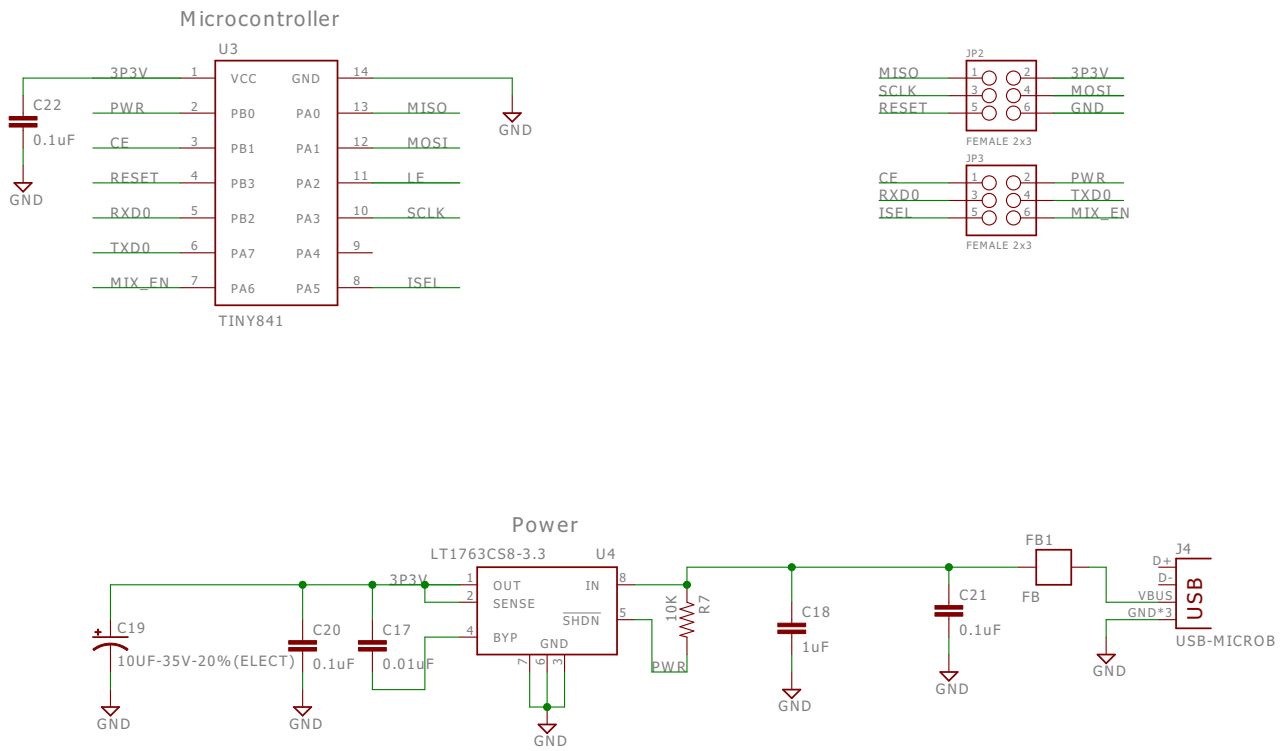

TITLE: LNB	
Document Number:	REV:
Date: 7/24/2015 4:45 AM	Sheet: 2/2