REVISION HISTORY

1. 2016-10-12: created

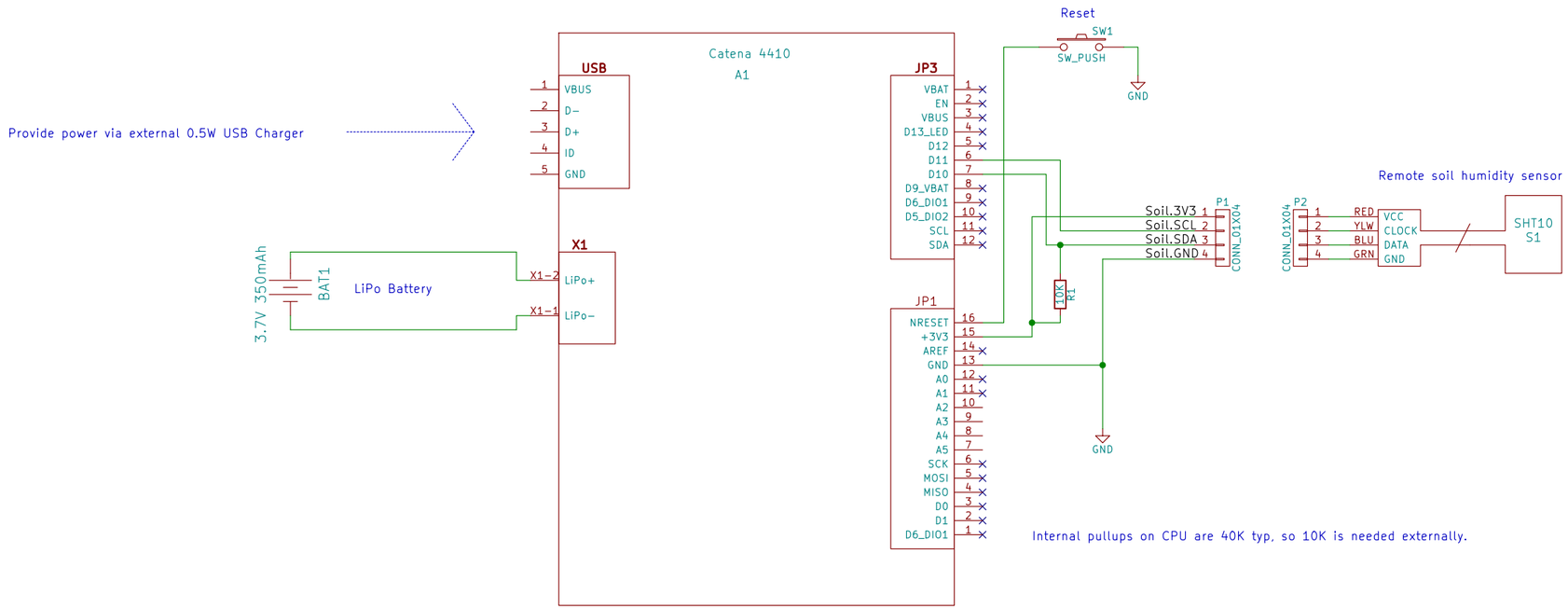

www.mcci.com
Mushroom House sensor for Anatolian project
MCCI Corporation

Sheet: /
File: Catena-4410-mushroom.sch

Title: Catena 4410 Mushroom House

Size: B	Date: 2016-10-12	**Rev: 1**
KiCad E.D.A. kicad 4.0.2-stable		Id: 1/1