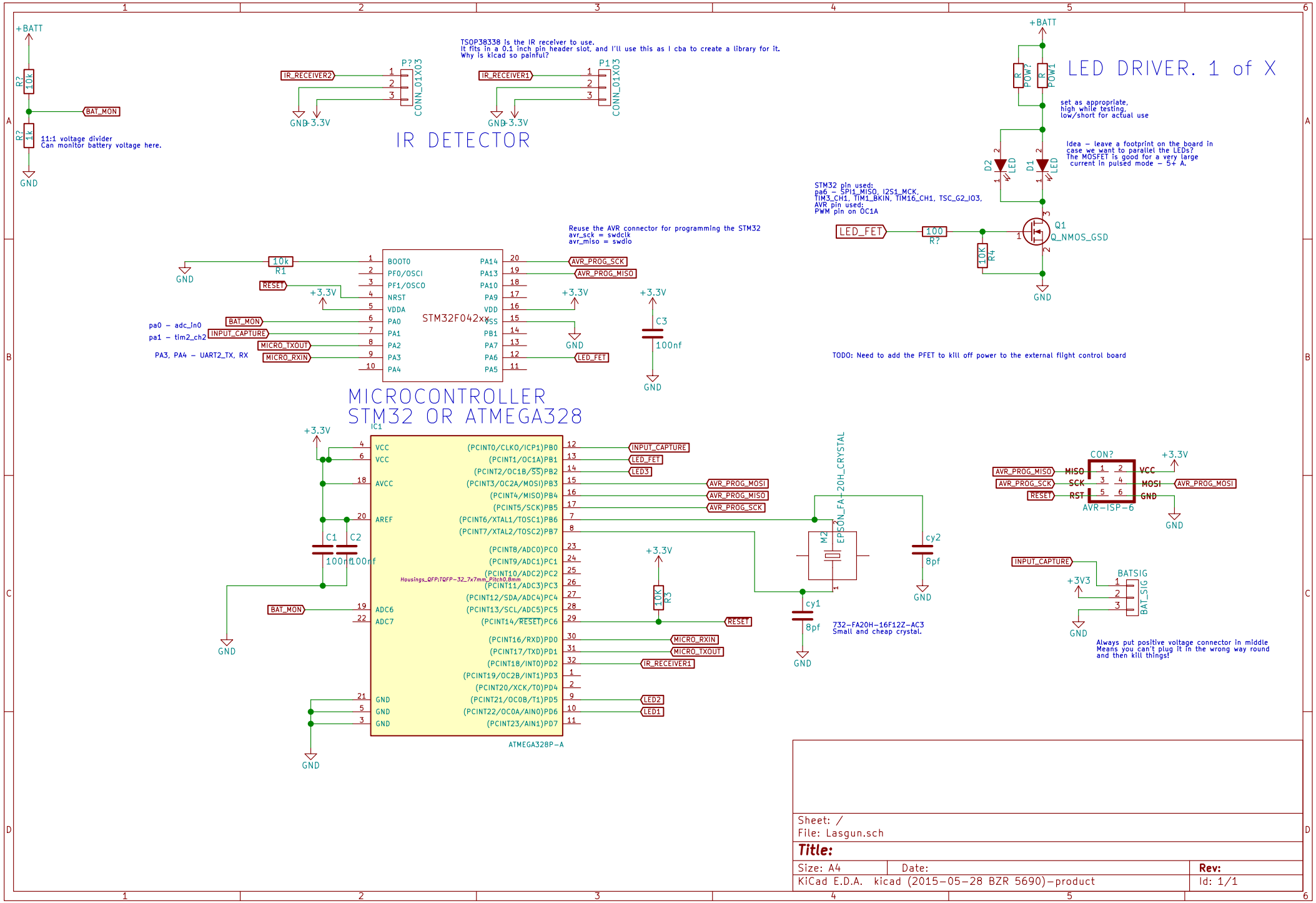

Sheet: /
File: Lasgun.sch

Title:

Size: A4	Date:	Rev:
KiCad E.D.A. kicad (2015-05-28 BZR 5690)-product		Id: 1/1