# Brain Controlled Wheelchair

By

**Mirza Faizan Shahzad**

20-CE-003

**Muhammad Owais Iqbal Malik**

20-CE-005

**Zerkaish Saeed**

20-CE-012

**Final Year Project Report**

Department of Computer Engineering

HITEC University, Taxila

Fall 2020

# Declaration

*We, hereby declare that this project neither as a whole nor as a part there of has been copied out from any source. It is further declared that we have developed this project and the accompanied reportentirely on the basis of our personal efforts made under the sincere guidance of our supervisor. No portion of the work presented in this report has been submitted in the support of any other degree or qualification of this or any other University or Institute of learning. If any violation is found in this FYP report, we will be liable to bepunished under the plagiarism rules of HEC.*

**Signature:**_____

**Name:** Mirza Faizan Shahzad

**Signature:**_____

**Name:** Muhammad Owais Iqbal

**Signature:**_____

**Name:** Zerkaish Saeed

**HITEC University, Taxila**

Fall 2020

# Dedication

This dissertation is dedicated to our beloved parents. The success of this project was made possible by their tremendous support, unending prayers, and unwavering faith in us. Additionally, we dedicate this dissertation to our siblings and the respectable professors who guided our study and made it possible for us to finish this assignment successfully. The most important thing is to nominate the friends who have contributed greatly to this fulfillment since they have supported and influenced us in every way throughout my academic career in addition to my entire existence. These are the people who have prayed and crossed their fingers for our happiness and prosperity over and over again.

Department of Computer Engineering

HITEC University, Taxila

Brain Control Wheelchair

**Presented by**

| Names | Roll No |
|---|---|
| Mirza Faizan Shahzad | 20-CE-003 |
| Muhammad Owais Iqbal Malik | 20-CE-005 |
| Zerkaish Saeed | 20-CE-012 |

In partial fulfilment of the four years **B.S. Computer Engineering** requirements, HITEC University Taxila, Pakistan underneath the supervision of its project adviser as well as authorized by the project review board has been recognized.

_____

**Supervisor's Name: Tehseen Ahsan**

Lecturer, Project Advisor

_____

**Head of Department Name: Dr. Raza Ali Shah**

Chairman

Department of Computer Engineering

# Acknowledgement

Thanks to **ALLAH the Almighty**, gave us the strength to work on this project and complete it on time with the best possible quality. We would like to express our gratitude to the supervisor **Sir Tehseen Ahsan**, guided us throughout this project. We would also like to thanks Sir Ali Raza for his guidance and to our family and friends, who supported us in each and every step of our life, especially in the past four years of university period.

Self believe and hard work will always give you success. It is a very proud moment for us, that we completed our **Final Year Project** on time without any delay. This is all due to hard work of our group members and very supportive super visibility of our kind and humble supervisor **Sir Tehseen Ahsan.** He helped us in every critical situation of our development phase and guided us very politely. Our supervisor always advised us to stay calm and not to panic in a difficult situation. We faced different difficulties in our project but our supervisor supported us. We appreciate his price-less efforts and time that he gave us during this project. Big thanks to our supervisor for standing beside us in all times and making this possible.

Mirza Faizan Shahzad

Muhammad Owais Iqbal Malik

Zerkaish Saeed

# Abstract

This paper first demonstrates the design and implementation of a system for brain-controlled wheelchairs by incorporating the hardware of a NeuroSky EEG headset and a Raspberry Pi 4 Model B-based system with SVM model training. We have designed our project to provide help for those with personal mobility impairment. That is, the project allows for people to control a wheelchair using purely their brain signals and hence improves their independence and quality of life.

This procedure will start with the acquisition of the EEG signals that are elicited after using the Neurosky headset to collect the brainwave data related to a given mental state. The elicited signals are then pre-processed to extract some important features, such as the attention and meditation levels, through the use of signal processing techniques. Then, a dataset of such features and the corresponding wheelchair control commands that are merely acquired from the sessions recorded during training will be prepared.

The role of the Raspberry Pi 4 Model B is to act as a central processing unit to carry out real-time data processing and decision-making. Upon receiving preprocessed EEG signals, the intent of the user according to his/her mental state is classified by the Raspberry Pi, which uses a trained SVM model. The SVM model discriminates between different brainwave patterns and maps them to suitable commands for the wheelchair motion, such as forward, backward, left, or right, based on the collected data set.

The system's effectiveness measured through extensive testing and validation has been well attested to in the classification accuracy, response time, and user experience of the Brain-Controlled Wheelchair System. Such tests reveal the reliability and robustness of the system in real-life scenarios.

The results of the tests confirm that the system developed is feasible and effective in allowing independent operation of a wheelchair from brain signals by motor-disabled persons. This contributes to the advancement in assistive technology, with a new intuitive interface to enabling wheelchair use and thereby promoting independence and mobility for those with limited physical capabilities.

# TABLE OF CONTENTS

## Contents

Declaration ..... 2
Dedication ..... 3
Acknowledgement ..... 5
Abstract ..... 6
Chapter One ..... 14
INTRODUCTION ..... 14
1.1 Background: ..... 14
1.2 Role in Society: ..... 14
1.3 Aims & Objectives: ..... 14
1.4 Problem Statement: ..... 16
1.5 Motivation: ..... 16
Chapter Two ..... 18
LITERATURE SURVEY ..... 18
2.1 Brain Controlled Wheelchair: A Smart Prototype ..... 18
2.1.1 Methodology: ..... 18
2.1.2 Model Used: ..... 19
2.2 DESIGN & IMPLEMENTATION OF BRAIN CONTROLLED WHEELCHAIR 20
2.2.1 Methodology: ..... 20
2.2.2 Model Used: ..... 21
2.3 BRAIN-CONTROLLED WHEELCHAIR USING LABVIEW ..... 22
2.3.1 Methodology: ..... 22
2.3.2 Model Used: ..... 23
2.4 Brain-Computer Interface for Control of Wheelchair Using Fuzzy Neural Networks 23
2.4.1 Methodology: ..... 23
2.4.2 Model Used: ..... 24
2.5 Wheelchair controlled by human brainwave using brain-computer interface system for paralyzed patient ..... 25
2.5.1 Methodology: ..... 25
2.5.2 Model Used: ..... 27

Comparative Table ..... 28
Chapter Three ..... 30
COMPONENTS USED ..... 30
3.1 Hardware Components: ..... 30
3.1.1 Neurosky Mindwave Mobile 2 Headset: ..... 30
3.1.1.1 Neurosky Technology: ..... 30
3.1.1.2 Product Specification: ..... 31
3.1.1.3 ThinkGear Chip: ..... 32
3.1.2 DC Motors: ..... 32
..... 32
3.1.3 Raspberry Pi 4 Model B: ..... 33
3.1.3.2 Use Cases ..... 34
3.1.3.3 Operating Systems ..... 34
3.1.4 Arduino Uno: ..... 34
3.1.4.1 Features ..... 35
3.1.4.2 Connectivity ..... 35
3.1.4.3 Applications ..... 35
3.1.4.4 Programming ..... 36
3.1.5 IBT2: ..... 36
3.1.5.1 Specifications ..... 36
3.1.5.2 Features ..... 36
3.1.5.3 Connectivity and Control ..... 37
3.2 Software Components ..... 37
3.2.1 Neuroexperimenter ..... 37
3.2.1.1 Introduction ..... 37
3.2.1.2 Data Source ..... 37
3.2.1.3 Logging ..... 38
3.2.1.4 Class box ..... 38
3.2.1.5 Timers ..... 38
3.2.1.6 Performance Feedback ..... 39
3.2.1.7 Performance Grading ..... 39
3.2.2 Collab ..... 40
Chapter Four ..... 41
METHODOLOGY ..... 41
4.1 Conversion of Mechanical Wheelchair into Electrical Wheelchair ..... 42

4.1.1 Arduino Uno ....42
4.1.2 IBT2 Motor Driver ....42
4.1.3 DC Motor ....42
4.1.4 Joystick ....42
4.1.5 General Circuit Explanation ....43
4.2 Data Collection ....43
4.3 Types of signals ....44
4.4 Preprocessing of Dataset ....44
4.4.1 Loading the Data ....44
4.4.2 Combining the DataFrames ....44
4.4.3 Cleaning Column Names ....44
4.4.4 Updating the 'class' Column ....44
4.4.5 Feature Selection ....45
4.4.6 Splitting the Dataset ....45
4.5 Machine Learning Model Used ....45
4.5.1 SVM ....45
4.5.1.1 Features of SVM ....45
4.5.1.2 Advantages of SVM ....45
4.5.1.3 Disadvantages of SVM ....46
4.5.2. LDA ....46
4.5.2.1. Features of LDA ....46
4.5.2.2. Advantages of LDA ....46
4.5.2.3. Disadvantages of LDA ....46
4.6 Comparison Table of the Model ....47
4.7 Training Process ....48
4.8 Evaluation Metrices ....49
4.8.1 Accuracy ....49
4.8.3 Classification Report ....49
4.9 Serial Communication between Raspberry pi 4 and Arduino Uno ....50
Chapter Five ....52
TESTING ....52
5.1 Testing Based upon Predictions of the model ....52
5.2 Testing in Real Time ....52
5.2.1 Bluetooth Connection of Headset ....52
5.2.2 Signal Processing ....52

5.2.3 Real-time Predictions .....52
5.2.4 Serial communication with Arduino Uno.....52
Chapter Six.....53
PROPOSED APPLICATIONS.....53
6.1 Medical Rehabilitation Centers.....53
6.2 Assisted Living Facilities.....53
6.3 Home Use.....53
6.4 Research and Cognitive Sciences.....53
6.5 Emergency Evacuation in Healthcare Facilities.....54
6.6 Integration with Smart Home Technologies .....54
6.7 Public Accessibility.....54
Chapter Seven .....55
RESULTS .....55
7.1 Simulation Result.....55
7.2 Accuracy of the LDA Model.....55
7.3 Accuracy of the SVM Model .....55
REFERENCES .....56

# LIST OF FIGURES

Figure 1: Design flow of brain-controlled wheelchair [1] ..... 19
Figure 2: Block Diagram of the system [2] ..... 21
Figure 3: The mechatronic design of the brain-actuated wheelchair[3] ..... 22
Figure 4: The BCI based control of the wheelchair [4] ..... 24
Figure 5: Block diagram of the brainwave detection system [5] ..... 27
Figure 6: Headset ..... 30
Figure 7: DC Wiper Motor ..... 32
Figure 8: Raspberry Pi 4 Model B ..... 33
Figure 9: Arduino Uno ..... 35
Figure 10: IBT2 ..... 36
Figure 11: Neuro Experimenter ..... 39
Figure 12: General Methodology ..... 41
Figure 13: Dataset ..... 43
Figure 14: Classification Report ..... 50
Figure 15: Simulation Result ..... 55
Figure 16: Model Accuracy using LDA ..... 55
Figure 17 Model Accuracy Using SVM ..... 55

# LIST OF TABLES

Table 1: Brain Controlled Wheelchair A Smart Prototype overview [1] .....20
Table 2: Design and Implementation of Brain Controlled Wheelchair Overview [2].....22
Table 3: Brain Controlled Wheelchair using Labview [3].....23
Table 4: Brain-Computer Interface for Control of Wheelchair Using FNN Overview [4] ....25
Table 5: Wheelchair controlled by human brainwave using BCI system for paralyzed patient Overview[5] .....27
Table 6: Comparative Table.....29
Table 7: Comparison Table of the Models Used .....48

# LIST OF ABBREVIATIONS

| | |
|---|---|
| EEG | Electroencephalography |
| SVM | Support Vector Machine |
| BCW | Brain Control Wheelchair |
| BCI | Brain Control Interface |
| NEX | Neuroexperimental |
| ML | Machine Learning |
| FFT | Fast Fourier Transform |
| FNN | Fuzzy Neural Network |
| LCD | Liquid Crystal Display |
| LED | Light Emitting Diode |
| ASICs | Application Specific Integrated Circuit |
| OSMC | Open Source Media Center |
| GPIOs | General Purpose Input/Output |
| ICSP | In-Circuit Serial Programming |
| PWM | Pulse Width Modulation |
| BMI | Brain Machine Interface |

# Chapter One
# INTRODUCTION

## 1.1 Background:

This project lies within the scope of neuroscience, signal processing, and machine learning in assistive technology. BCIs have since emerged as a promising avenue to enable direct communication between the human brain and external devices, offering a potential lifeline for people with severe motor disabilities. In conclusion, with the facilitation of neuroscience, researchers have been able to decode brainwaves that correlate with the cognitive state of attention and meditation, proving the concept of EEG-based control. Signal processing techniques will be used in a bid to derive meaning from EEG signals, while machine learning algorithms, such as the SVM, will help convert the activity in the brain to executable commands. Modern assistive technology applications are bringing solutions to common wheelchair interfaces by changing them to brain control interfaces. With the use of NeuroSky EEG technology and application of computing technologies from the Raspberry Pi and methodologies for collection of datasets and SVM model training, this project will piece these fields together to come out with an easy-to-use, user-intuitive, and reliable neurosky-brain-controlling-interface wheelchair system. Over the years, ways of controlling wheelchairs have been evolving.

## 1.2 Role in Society:

The social impact of the project is twofold and very intense, mostly in terms of empowerment and inclusion of people with high motor disabilities. This system of the brain-controlled wheelchair would not only enable the users with a mobile means but would also make them independently self-reliant. Such freedom would mean that the quality of life improves due to the capacity achieved for improved participation in the activities of daily living and active participation in the social, learning, and professional environments. The project will also break the barrier of improved accessibility through the implementation of a novel chair interface for wheelchair control, fostering full inclusion of people with disabilities to be able to participate completely in society at large. The impact that this project has goes far beyond the primary goal of the promotion of assistive technology research to inspire future innovative developments and to push the limits of what is technically possible to better the lives of humans with some form of disability. In conclusion, this project entails hope and advancement in how technology influences human society and makes a more inclusive and just world possible for everyone.

## 1.3 Aims & Objectives:

1. Empowerment through Mobility: This aspect of the project focuses on providing Mobility through Empowerment: This part of the project will give independence to individuals with severe motor disabilities so that they can be mobile on their own, with more freedom. With the development of a BCW system, users would be able to find their way around the area simply by the power of their brain signals, thus reducing their reliance on other people for mobility purposes. This empowerment not only contributes to greater feelings of autonomy and self-esteem among the users but also enhances their opportunities for social integration, exploration, and participation in various activities.

2. Advanced HCI: Implementing a sophisticated BCI at the frontier. The BCI will be able to interpret the user's cognitive states from EEG signals and translate them into commands for controlling the wheelchair. Advanced signal processing is needed in order to extract information directly from EEG signals. In the literature, machine learning algorithms, such as neural networks, have mostly been used in the fields of pattern recognition and classification of mental intentions. Such a system should not only offer continuous control of the wheelchair but should open new windows in broad areas of neurotechnological research and human-computer interaction.
3. Smart control implementation: Implementation of fuzzy logic and neural networks in BCWs will make the system adaptable and robust. Fuzzy logic includes vague or uncertain information in the system, thereby making the system more tolerant of EEG signal variations that may be brought about, say, by the fatigue or inattention of the user. On the other hand, neural networks facilitate learning modules in the system toward the adjustment of individual EEG patterns of a user. These, together, lead to better efficiency and accuracy. The smart control system ensures BCWs can accurately decode diversification EEG patterns and hence accurately translate them into sciences in engineering wheelchair movements even in volatile and uncertain environments.
4. Real-time responsiveness is the comparison between a live and a natural wheelchair navigation experience. It means that the time between the acquisition of the EEG signal and the actual execution of the wheelchair command should be reduced. It is to be certain that the command over the wheelchair movements happens as desired in real-time without any delays or lags in the BCW system with optimal speed for processing and efficiency. This goes a long way in enhancing the user experience to one that is smooth and fluid, with respect to environment interaction.
5. Safety Enhancement: This is a very critical concept in the operation of wheelchairs, especially for people with severe motor disabilities and less relative control over their physical drives. Such features of the system include auto-braking features to avoid potential collisions or emergencies; for example, obstacles on the path or sudden user intents to reverse in the navigation of BCW. Such safety mechanisms help to reduce the risk of accidents or injury to the various user populations and help to enhance confidence and peace of mind while using the BCW system.
6. User-Centric Design: The system for the BCW is designed in a user-centered manner so that it incorporates features that are specified to meet the needs and capabilities of people with severe motor disabilities. This implies designing an interface that does not only look intuitive but is actually user-friendly in every respect so the users with different cognitive and motor capabilities should actually be able to interact with the device. Features added to the system, such as settings for controls that are user-configurable, proper feedback features, and ergonomic elements, will go a long way to making the system more usable and acceptable. The BCW system will therefore become useful in regard to user needs and preferences, as a tool for improving ambulating independence.

## 1.4 Problem Statement:

For most people with severe motor impairments, independent mobility remains an elusive goal due to traditionally limited control mechanisms of wheelchairs, which are mostly designed based on manual input, with varying joysticks and buttons that might be hard to reach and sometimes unrealistic for a person with little or no body movement. As a result, people with severe motor impairments are highly deprived of means of independent mobility and largely dependent on caregivers or people who assist them in moving and traveling. Such limitations indicate the necessity for more developed solutions that allow people to have control over their own mobility through cognitive intentions much more than physical movements, which greatly depend on recovery and realization of this independence.

The Brain-Computer Interface (BCI) technology provides a novel and noninvasive control scheme that reflects the thoughts or intentions of users, which are captured by EEG signals. EEG signals correspond to electrical activities happening inside the brain and are measured in a noninvasive manner by attaching sensors on the scalp. However, pertaining challenges are availed with the relevancy needed for the interpretation of EEG signals toward wheelchair control since brain activity represents a complex process that shows significant variations because of the intrinsic variability and noise in EEG data.

One of the crucial problems with BCI systems based on EEG is the high variety of electrical patterns in the brain that makes it difficult to accurately discriminate different cognitive states or intentions based on measured EEG signals. In other words, its variability may be elicited by user fatigue, environmental distractions, or individual variations in anatomical and functional brain organization. Features from the signals need to be extracted, and that is done by developing sophisticated signal processing and machine learning techniques in order to make them meaningful. In addition, noise from other sources makes the distortion in the EEG data complex, such as muscle motion, eye movement, and interference from surroundings.

Thus, robust pipelines of signal processing and machine learning algorithms need to be developed for the extraction of relevant features in the EEG signals, decreasing the effect of noise, artifacts, and other sources of variability. Prompting artifact removal, feature extraction, and classification are core techniques to identify the patterns within the data collected through EEG corresponding to the intended actions or commands of the user. Moreover, the improved machine learning such as deep learning development can greatly improve the accuracy and dependability of EEG-based control systems through large-scale datasets and complex neural network structures.

However, the potential of BCI technology to profit severely motor-disabled individuals is very great. These BCI-based systems for potential applications support a chair-independent pathway to maximize users' independence, making decisions and the possible quality of life so much larger than if users just depended on the voluntary movement of their physical body. Cognizant of this is the needed research and innovation through EEG-based control systems, which will meet the technical challenges and realize the full potential of such assistive technologies in empowering individuals with severe motor disabilities.

## 1.5 Motivation:

The general motivation behind this can be deeply rooted in realizing the challenges which continue to face the individual, suffering from severe motor disabilities, with regards to achieving autonomous mobility and independency during daily activities. Conventional robotic and smart wheelchairs fail to provide service to a broad array of severe motor-disabled individuals in an applicable and efficient way. People with severe motor disabilities often have limited ability to drive conventional wheelchairs, which are mainly controlled by manual input

interfaces such as joysticks, switches, or head arrays. Such interfaces might not even be an option, or at all realistic, for many people with little or completely lost mobility of their bodies many people would therefore have to depend on others to execute ordinary daily maneuvers.

This does underline the reality that advanced imperative solutions need to enable individuals to navigate through their environment based on cognitive intentions rather than physical movements. The development of a brain-controlled wheelchair system is one such promising avenue. This project incorporates Brain-Computer Interface (BCI) by decoding electroencephalography (EEG) signals to infer cognitive intention in severe motor-disabled subjects.

There are several major factors that have motivated development in assistive devices incorporating BCI technology. First, BCI technology is now developed to the level where a possible revolution of assistive technology is quite evident, as it has turned out to be possible, for instance, to communicate directly from the human brain to external equipment. This is now done by recording directly from the surface electro-encephalogram, which produces the electrical activity of the brain, non-invasively, by means of sensors applied to the scalp. BCIs can translate the mental state of a user into commands that can be used to control wheelchairs; for example, by these signals.

However, enormous technical challenges lie in the integration of such BCI technology into assistive devices, especially in case of appropriation of complex EEG signal interpretation. Because of the inherently noisy and variable nature, EEG signals considerably carry the challenge of extraction of useful information in an accurate way. Interpretation of EEG data also becomes problematic under different conditions of user fatigue, environmental disturbances, and individual variations in brain activity. Some of the ways to overcome these challenges include the development of viable signal processing techniques and strong machine learning algorithms so that the states of the brain can be differentiated into appropriate control commands by the wheelchair.

Despite other reasons, the BCI-based AT is going to be extremely beneficial for users with really severe motor disabilities. This will enhance opportunities for living independently, autonomous mobility, and improving quality of life, since wheelchair control will be based on the user's cognition, which is otherwise out of reach based on their physical, bodily gestures. This project is motivated by the need to find ways in which the transformational potential regarding BCI technology can empower people with significant motor disability to live more independently and participate more fully in society. The interdisciplinary collaboration and innovation infused within the project do everything possible to address needs that are currently unmet and this technical challenge, among numerous others, that is placed in the way of advancing the field—making real changes for people with serious motor disabilities.

# Chapter Two

# LITERATURE SURVEY

## 2.1 Brain Controlled Wheelchair: A Smart Prototype

### 2.1.1 Methodology:

This project [1] adopts a methodology that is largely focused on the development of a smart wheelchair that can be controlled through three ways: brain, joystick, and push buttons. The basic components of the methodology are as follows:

1. Primary Control System: Wheelchair primary control is brain control, which depends on EEG data acquisition through the use of the Mindwave mobile headset. This approach includes capturing related EEG signals from the user's intentions, such as eye blinks, attention levels, toward processing them into drive commands for the movement of the wheelchair.

2. EEG Acquisition System: The EEG signal would be acquired using the wireless headset, so ease of setup accounts for an increase in the cost. Acquired EEG data is sent to an Android smartphone app developed with the Neurosky toolkit to be processed and then translated into wheelchair commands.

3. Secondary Control System: In addition to the primary brain control system, there is also a secondary control of the wheelchair by using a joystick or an Android-based remote control. The above-mentioned controls are incorporated as secondary choices, and the swap can be made easily very easily.

4. Safety System: This is one very crucial section of the methodology in terms of user and environmental safety. Obstacle detection from all directions is done using the ultrasonic sensor. In case of any obstacle detected, an accessible wheelchair will automatically be brought to a halt to avoid contact with it.

5. Design Flow and Experimentation: The paper also describes the design flow of the wheelchair operation, detailing how the controls switch between modes and how safety measures are integrated. Experimental results are provided to demonstrate the effectiveness and reliability of the different control systems.

This comprehensive methodology integrates various technologies and control systems to create a versatile and safe wheelchair, focusing heavily on user control and safety.

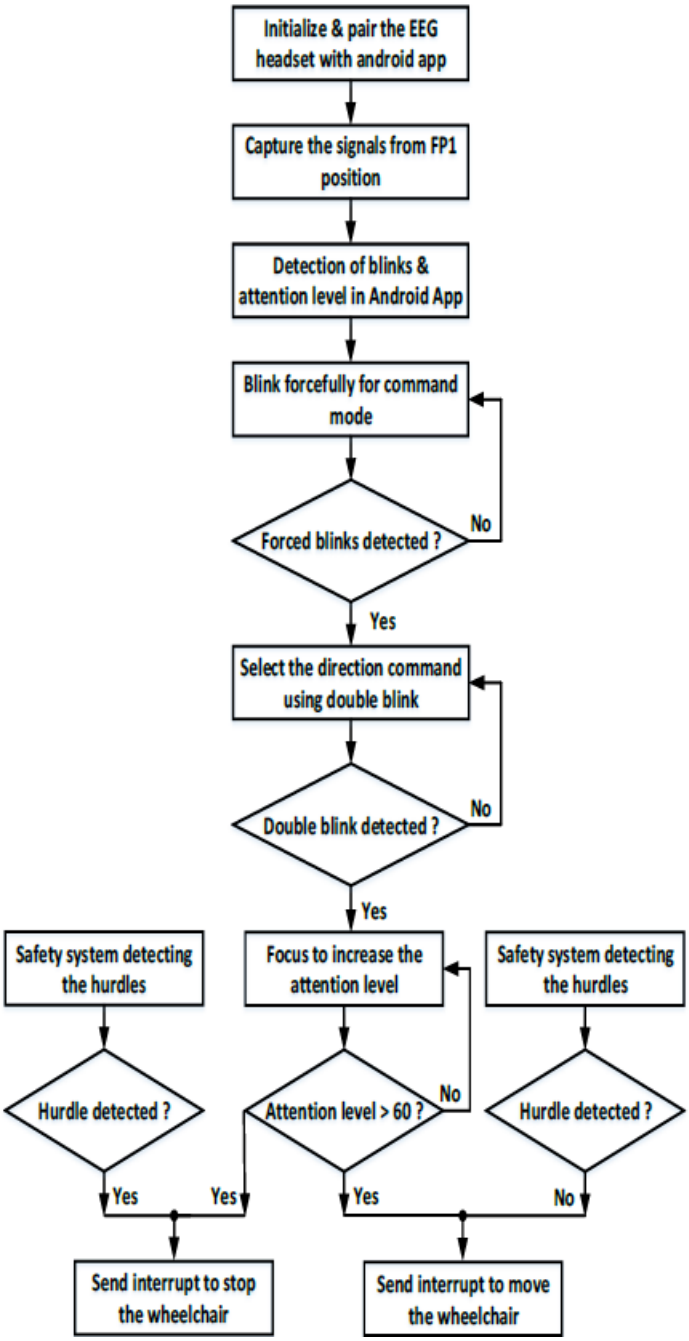


*Figure 1: Design flow of brain-controlled wheelchair [1]*

### 2.1.2 Model Used:

The paper does not describe the use of machine learning models such as decision trees, neural networks, or regression models. It primarily focuses on a straightforward application of signal processing and control logic to translate EEG signals directly into wheelchair control commands without an intermediate ML model for classification or prediction. This methodology emphasizes real-time response and direct control, suitable for assistive technologies where rapid and reliable response to user inputs is critical.

| Author(s) | Methodology | Machine Learning Model Used | Accuracy Achieved |
|---|---|---|---|
| Muhammad Ahsan Awais, Mohd Zuki Yusoff, Norashikin Yahya, Sheikh<br>Zeeshan Ahmed and Muhammad Umair Qamar | Development of a brain-controlled wheelchair using EEG signals captured by Neurosky Mindwave Mobile headset. Methods included signal processing for eye blinks and attention levels, and safety systems. | None specified | Varies by control method: 76% to 92% |

*Table 1: Brain Controlled Wheelchair A Smart Prototype overview [1]*

## 2.2 DESIGN & IMPLEMENTATION OF BRAIN CONTROLLED WHEELCHAIR

### 2.2.1 Methodology:

DESIGN & IMPLEMENTATION OF BRAIN CONTROLLED WHEELCHAIR [2] employs a methodology focused on using Electroencephalography (EEG) for brain-controlled wheelchair operation. Here's a detailed breakdown of the methodology used:

1. EEG Signal Acquisition: The methodology utilizes a Neurosky Mindwave headset to record brain waves, specifically capturing attention and meditation parameters from the user's brain. This non-invasive technique involves placing an electrode cap on the user's scalp to capture EEG signals.

2. Signal Processing: The EEG signals are processed to interpret the user's intentions. The processing involves analyzing brain waves such as alpha, beta, and gamma waves to determine attention levels. These signals are meant for the motor that drives the movement of the wheelchair.

3. Hardware Setup: The system consists of the following:

- EEG Electrode: This records the user's EEG signals from the brain.
- Arduino Microcontroller: This is the unit controller to interpret processed signals into motor commands for the wheelchair.
- Bluetooth Module (HC-05): This would provide the wireless communication link between the EEG capturing device and the microcontroller.
- Wheelchair: Four brushless DC motors mounted in the wheelchair frame, commanded from Arduino microcontroller-generated commands.

4. Control Logic: Mobility is controlled through brain waves for the user in the wheelchair. For example, in the case when the average attention value detected from the EEG signals is over some given threshold, say 50, the carriage continues to move forward; otherwise, it stops.

This design combines the EEG technique with microcontroller-based hardware in order to develop a brain-controlled wheelchair system dedicated to the enhancement of mobility control by the severely disabled, who cannot use a normal control system. This will include joysticks for those who cannot operate these joysticks.

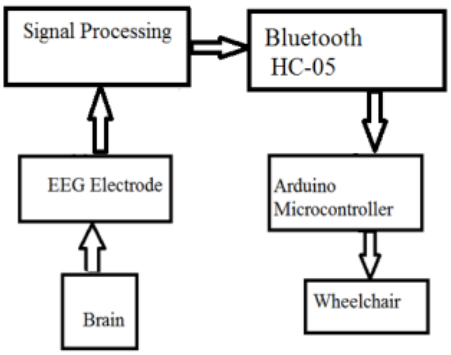


*Figure 2: Block Diagram of the system [2]*

### 2.2.2 Model Used:

The presented machine learning model applies the advances of Electroencephalography (EEG) models to the design and implementation of the brain-controlled wheelchair. The brain signals are recorded from the cap of an electrode for recording EEG, placed at the scalp of a user. Following that, the recorded brain signals from a scalp EEG electrode cap are processed with an Arduino microcontroller into the commands for movement of the wheelchair. This setup has the following main components:

- EEG Electrode: Records the electrical activity of the brain.
- Signal processing: Transfer brainwave signals into useful data.
- Arduino Microcontroller: The microcontroller is in charge of the overall process by processing the data and writing commands to the wheelchair.

The system uses non-invasive techniques for acquiring brain waves and classifies the brain waves into alpha, beta, and gamma waves to control the movement of the wheelchair. Attention level was detected by EEG for moments of the wheelchair.

| Author's Name | Methodology | Machine Learning Model Used | Accuracy Achieved |
|---|---|---|---|
| Mehul Patel, Rishikesh Bhavsar | Use of EEG signals to control | EEG-based signal processing with | 70% |

| | | | |
|---|---|---|---|
| | wheelchair movements | Arduino microcontroller | |

*Table 2: Design and Implementation of Brain Controlled Wheelchair Overview [2]*

## 2.3 BRAIN-CONTROLLED WHEELCHAIR USING LABVIEW

### 2.3.1 Methodology:

The proposed approach of "Design & Implementation of Brain Controlled Wheelchair"[3] is made up of few integral parts that are associated with wheelchair control by brain signals.

1. Signal Acquisition: The process begins with the acquisition of EEG signals from the user. In this first step, an electrode cap is placed on the user's scalp in a depiction that captures his brain's electrical activity.

2. Signal Processing: Further processing into the interpretation of the intention of the user is implemented on the scope of the captured EEG signals. It is the processing of transforming brain waves into a form such that actions can be executed by the wheelchair. Further amplification and filtering from noise, this processing defines clear and actionable data from the raw EEG signal.

3. Command Execution: After receiving and processing the signals and decoding the intended commands, the respective command forwarding process is done to the control system of the wheelchair. The said commands are executed by the Arduino microcontroller, whereby the location will be found out by brain activity.

4. Feedback Mechanism: Though not necessarily spelled out, systems with such usually come with certain feedback to the user that the wheelchair is responding in an appropriate manner to the commands received from the brain. This could be visual, auditory, or by haptic indication.

It uses EEG and microcontroller technology to afford mobility solutions to individuals who might not be able to control a wheelchair through conventional means. The process emphasizes the detection of user intentions via brain waves that are processed using sophisticated electronics and algorithms to drive the wheelchair in desired directions.

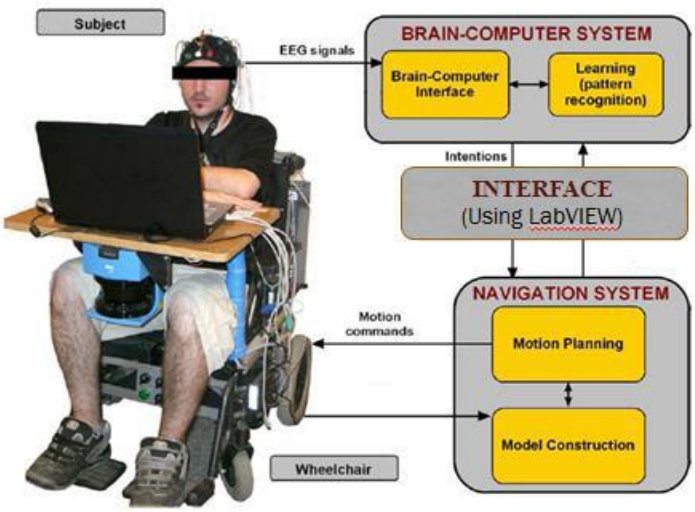


*Figure 3: The mechatronic design of the brain-actuated wheelchair [3]*

### 2.3.2 Model Used:

No Machine Learning model was used in the paper.

| Author's Name | Methodology | Machine Learning Model Used | Accuracy Achieved |
|---|---|---|---|
| Agneev Guin<br>Bidyut Bikash Baishya | Use of EEG signals to control wheelchair movements | No ML Model was used | 85% |

*Table 3: Brain Controlled Wheelchair using Labview [3]*

## 2.4 Brain-Computer Interface for Control of Wheelchair Using Fuzzy Neural Networks

### 2.4.1 Methodology:

This is the methodology that will be followed in the papers "Brain-Computer Interface for Control of Wheelchair Using Fuzzy Neural Networks"[4]. It covers all components or characteristics deemed necessary for a systematic approach to developing a system of brain-computer interface for wheelchair users.

1. Signal Acquisition and Preprocessing: Signals in the form of EEG are acquired initially through sensors. The signals go through an amplification stage, while appropriate filtering is enforced to enhance the quality of the signal and reduce noise. Pre-processing of the signals follows for the extraction of features relevant to the classification that will be carried out. Examples include windowing, normalization, and applying the Hamming window to reduce spectral leakage.
2. Feature Extraction: Feature extraction follows preprocessing and involves the use of Fast Fourier Transform (FFT) of time-domain EEG signals to transform to the frequency domain. Such transformation helps to identify frequency components and establish features for classification.
3. Classification Using Fuzzy Neural Networks (FNN): The features extracted are input to the FNN for the classification of the signals so that the wheelchair will be controlled by the formed commands. This FNN is of a multilayer structure including:

- Input layer: It is responsible for receiving the pre-processed signals.
- Fuzzy layer: Executes the fuzzy logic principles to process uncertainty and imprecision in signal classification.
- Rule layer This realizes fuzzy rules, which, upon inputs, are used in decision support. –Output layer: It simply generates the final control orders, which implement the class decisions, for the wheelchair.

4. Control Commands Execution: The classified signals are converted to proper commands that actually take actuate the movement of wheel chair such as forward, left, stop, etc.
5. System Integration and Real-Time Implementation: The overall system is integrated

directly with a real-time BCI setup where the classification results will be directed to control the movements in the wheelchair. This also implies interconnecting the computational parts with physical wheelchair hardware for assuring real-time response and control accuracy.

Advanced signal processing and fuzzy neural networks were used in this approach to interpret EEG signals effectively so as to translate them into meaningful control commands for the wheelchair, and hence provide advanced mobility to severely physically challenged users.

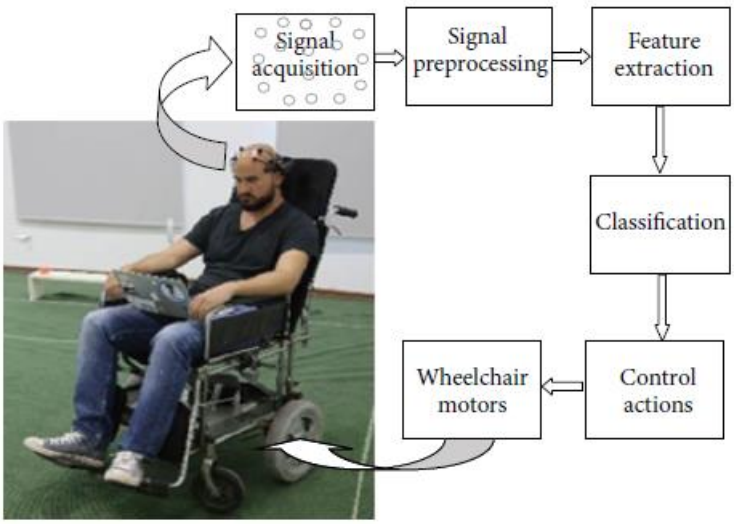


*Figure 4: The BCI based control of the wheelchair [4]*

### 2.4.2 Model Used:

The type of machine learning model used in the paper "Brain-Computer Interface for Control of Wheelchair Using Fuzzy Neural Networks" is a Fuzzy Neural Network. This kind of model combines the concept of fuzzy logic with neural networks to help carry out classification and interpretation of EEG signals for wheelchair control. Here is how the FNN is to be used:

1. Fuzzy Logic: This is done so that the system can handle uncertainty and imprecision in EEG signals, which are also usually noisy and complex. This methodology emulates human decision-making by considering several shades of truth rather than a hard true or false.

2. Neural Network: It is coupled with the fuzzy logic module, becoming an FNN learning a mapping of input features derived from EEG signals to outputs (wheelchair control commands) from training data.

3. Structure of the FNN:

- Input Layer: This layer receives the pre-processed features extracted from the EEG signals.
- Fuzzification Layer: The inputs are converted into fuzzy values based on membership functions, typically Gaussian functions.
- Rule Layer: This layer combines the fuzzy inputs according to a set of fuzzy rules (derived during the training process). Each rule corresponds to a particular control action for the wheelchair.

- Defuzzification Layer: This layer converts the fuzzy rule outputs back into crisp values to generate specific commands for wheelchair movement.

4. Learning and Adaptation: The FNN learns from training data, adjusting its parameters (such as the weights of the neural network and parameters of the fuzzy logic component) to minimize classification errors. This learning involves backpropagation adjusted for fuzzy logic.

5. Output: The output from the FNN directly controls the wheelchair, translating the user's intent (as interpreted from EEG signals) into motion commands like moving forward, turning, and stopping.

This sophisticated machine learning approach allows for a robust and intuitive control mechanism for wheelchairs, enhancing the independence of individuals with severe mobility impairments.

| Author's Name | Methodology | Machine Learning Model Used | Accuracy Achieved |
|---|---|---|---|
| Rahib H. Abiyev, Nurullah Akkaya, Ersin Aytac, Irfan Günsel, Ahmet ÇaLman | Signal acquisition and preprocessing, feature extraction using FFT, classification using FNN, control commands execution. | Fuzzy Neural Network (FNN) | 100% (as reported in simulations) |

*Table 4: Brain-Computer Interface for Control of Wheelchair Using FNN Overview [4]*

## 2.5 Wheelchair controlled by human brainwave using brain-computer interface system for paralyzed patient

### 2.5.1 Methodology:

The methodology for the study described in the paper titled "Wheelchair controlled by human brainwave using brain-computer interface system for paralyzed patient"[5] involves several key components:

1. Brainwave Detection System:

- Equipment Used: An EEG device called Mindwave Mobile Plus (MW+) was used to capture brainwave signals in terms of attention level, blink detection, and eyebrow movement.
- Signal Conversion: The analog human brainwave signals were converted into digital values for attention level (0-100), eye blink detection (0-255), and signal quality value (0-200).

2. Integration with Wheelchair Control:

- Arduino Microcontrollers: Two Arduino boards were used. The first Arduino MEGA processed the attention and signal quality values, while the second Arduino UNO processed the eye blink detection data.

- Bluetooth Module: The HC-05 Bluetooth module was employed for wireless communication between the MW+ and the Arduino boards.
- Motor Control: An MDDS30A motor driver controlled the movement of the wheelchair based on the processed signals.
- User Interface: LED and LCD displays were utilized to show the attention value and the current command mode of the wheelchair.

3. Control Mechanism:

- Attention Level: The wheelchair moved based on the user's attention level exceeding a predefined threshold value specific to the user’s gender and age.
- Mode Adaptation: Changing the movement mode of the wheelchair (forward, right, backward) to left direction by using eye blinks.
- Emergency Stop: Eyebrow action could drive an emergency stop through the generation of signal quality values—26 and 51.

6. System calibration and setting of the thresholds

- Threshold Values: All threshold values assigned for attention levels can be diverse and empirically prepared based on differences between ranges of gender and different age groups.
- Safety Features: A mechanism was embedded for safety with signal quality issues, where the wheelchair will stop in low-quality signals to avoid unwanted movement.

7. Test and Validate

- Trial Runs: The chair was tested on different test subjects to record the time delays and the effectiveness of each control signal.
- Statistical Analysis: Data from testing was statistically analyzed using applications like SPSS to find out how each of these factors such as gender and age influences the attention values.
  In total, the whole set of techniques was aimed at producing a brain-controlled wheelchair that can be properly and safely used by paralyzed patients through their brainwave signals.

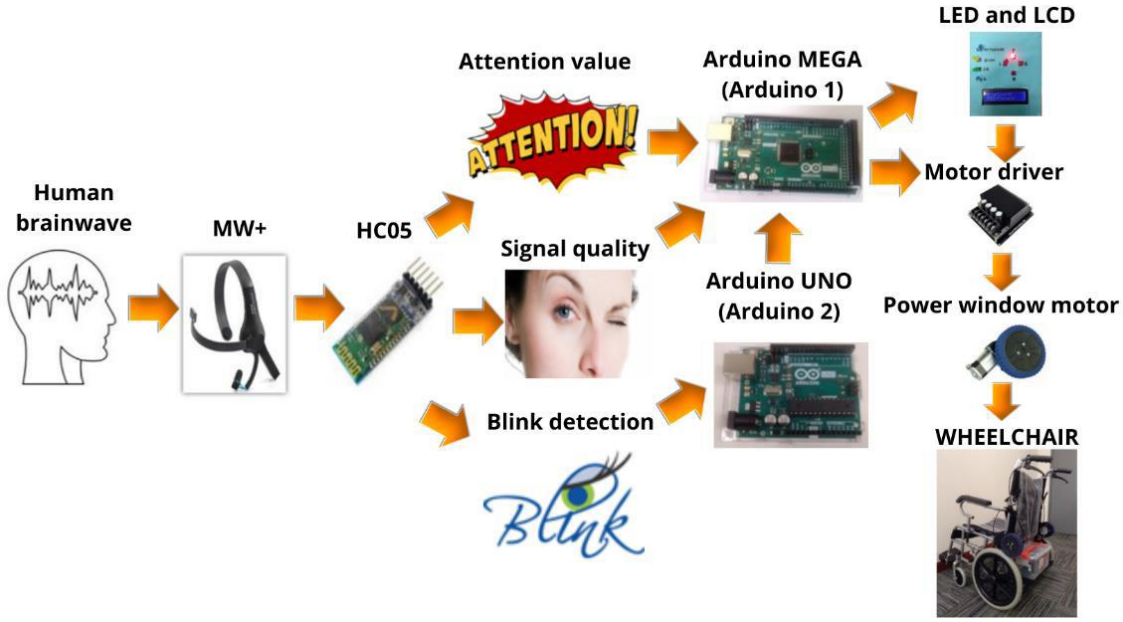


*Figure 5: Block diagram of the brainwave detection system [5]*

### 2.5.2 Model Used:

No specific machine learning model was used.

| Authors' Name(s) | Methodology | ML Model Used | Accuracy Achieved |
|---|---|---|---|
| Norasyimah Sahat, Afishah Alias, Fouziah Md Yassin | The study utilized EEG and EMG signals captured by Mindwave Mobile Plus to control a wheelchair's movement based on attention levels, eye blink strength, and eyebrow movements. Signals were processed to control the wheelchair directly without an intermediate machine learning model. | Not specified | 90% |

*Table 5: Wheelchair controlled by human brainwave using BCI system for paralyzed patient Overview[5]*

**Comparative Table**

| Authors' Name(s) | Methodology | ML Model Used | Accuracy Achieved |
|---|---|---|---|
| Muhammad Ahsan Awais, Mohd Zuki Yusoff, Norashikin Yahya, Sheikh Zeeshan Ahmed and Muhammad Umair Qamar | Development of a brain-controlled wheelchair using EEG signals captured by Neurosky Mindwave Mobile headset. Methods included signal processing for eye blinks and attention levels, and safety systems. | None specified | Varies by control method: 76% to 92% |
| Mehul Patel, Rishikesh Bhavsar | Use of EEG signals to control wheelchair movements | EEG-based signal processing with Arduino microcontroller | 70% |
| Agneev Guin Bidyut Bikash Baishya | Use of EEG signals to control wheelchair movements | No ML Model was used | 85% |
| Rahib H. Abiyev, Nurullah Akkaya, Ersin Aytac, Irfan Günsel, Ahmet ÇaLman | Signal acquisition and preprocessing, feature extraction using FFT, classification using FNN, control commands execution. | Fuzzy Neural Network (FNN) | 100% (as reported in simulations) |
| Norasyimah Sahat, Afishah Alias, Fouziah Md Yassin | The study utilized EEG and EMG signals captured by Mindwave Mobile Plus to control a wheelchair's movement based on attention levels, eye blink strength, and eyebrow movements. | Not specified | 90% |

| | | | |
|---|---|---|---|
| | Signals were processed to control the wheelchair directly without an intermediate machine learning model. | | |

*Table 6: Comparative Table*

# Chapter Three

# COMPONENTS USED

## 3.1 Hardware Components:

### 3.1.1 Neurosky Mindwave Mobile 2 Headset:

[6] NeuroSky is a company that has developed advanced ASICs for acquiring electroencephalography (EEG), simplifying the challenge of adding EEG to instruments and products for education or even entertainment. NeuroSky has several headsets for sale featuring their ThinkGear chip that acquire EEG through a single dry sensor electrode. The major advantage of the Neurosky headsets are the quick and easy setup - put the headset on like a pair of headphones and you are ready to go. Traditional gel bases EEGs can take up to 30 minutes to start acquiring data while the NeuroSky headsets are ready to go in seconds.

*Figure 6: Headset*

#### 3.1.1.1 Neurosky Technology:

Your brain is constantly producing electrical signals while it operates, as the cellular components of the brain (neurons) communicate with each other. At a macro scale, they produce a range of frequencies that scientists have found related to particular mental states. For example, a sleeping person's brain produces an abundance of delta waves, 20 whereas an alert and awake person concentrating hard on something will produce far more beta waves. The Mindwave headset picks up the brain's electrical activity and divides the signal by frequency into various types of waves, allowing it to infer the mental state. For the most of the non-scientific apps however, it primarily reads how relaxed (as measured by alpha/theta waves) or concentrated (as measured by beta/gamma waves) the user is.

#### 3.1.1.2 Product Specification:

1. EEG Sensor
   - Type: Single-channel EEG sensor.
   - Placement: Positioned on the forehead to measure the frontal lobe activity.
   - Reference and Grounding: Ear clip that attaches to the earlobe for grounding and reference signals.
2. Wireless Connectivity
   - Technology: Bluetooth for wireless communication.
   - Compatibility: Connects with Windows, macOS, iOS, and Android devices.
3. Compatibility with Applications
   - Software: Works with NeuroSky's proprietary applications and other compatible third-party software.
   - Developer Tools: SDK available for developers to create custom applications.
4. Power
   - Battery: Powered by one AAA battery.
   - Battery Life: Provides hours of continuous use, depending on the application and usage patterns.
5. Output
   - Data Output: Outputs raw brainwaves, EEG power spectrums, and eSense meters for attention and meditation levels.
   - Frequency Bands: Delta, Theta, Low-alpha, High-alpha, Low-beta, High-beta, Low-gamma, and Mid-gamma.
6. Design and Build
   - Headband: Adjustable to fit various head sizes.
   - Sensor Arm: Flexible arm with sensor tip that contacts the forehead.
   - Weight: Lightweight design for comfortable long-term wear.
7. Additional Features
   - Biofeedback Technology: Provides feedback on the user’s mental states, such as relaxation and concentration.
   - Educational and Entertainment Use: Supported by over 100 educational and entertainment applications designed to improve cognitive functions and mental fitness
8. Package Contents
   - In the Box: MindWave headset, ear clip, sensor arm, Bluetooth module, AAA battery, and setup guide.
9. Target Users
   - Applications: Ideal for education, personal brain training, meditation, and basic

research.

#### 3.1.1.3 ThinkGear Chip:

The chip collects signals through a single-channel EEG sensor, which is mostly mounted on the forehead, on top of the head, to collect electrical activity in the frontal lobe. In this respect, the sensor picks up tiny electrical signals that are an intrinsic part of normal brain activity.

These brainwave signals are then amplified and filtered by the captured ThinkGear chip. Actually, it filters noise interference coming either from the environment or other sources of interference that it can alternatively emit from other places of the body, such as the muscles. Further processing in the chip divides these signals into various bands of frequency such as alpha, beta, delta, and gamma waves each corresponding to and characteristic of various kinds of brain activity and states such as relaxation, focus, or deep sleep.

The preprocessed data can then be transmitted, normally over Bluetooth, to the receiving device where it can be further analyzed or used with the help of a number of applications. These applications range from gadgets that help in meditation, education, and games to those involved in research programs. Without the ThinkGear chip, EEG technology would have remained difficult to apply and non-implementable for non-medical consumer applications because of complexity in signal processing.

### 3.1.2 DC Motors:

We have used DC Wiper Motors for our project[7]. This is because of the following factors.

1. Voltage: Common operating voltages for DC wiper motors are 12V or 24V, corresponding to the electrical systems of most cars and commercial vehicles, respectively.
2. Motor Type: These are typically permanent magnet DC motors, chosen for their efficiency and good torque characteristics at low speeds.
3. Power Output: Power output can vary, but typical wiper motors might range from about 30 watts to over 60 watts, depending on the vehicle size and the specific requirements of the windshield wiper system.

*Figure 7: DC Wiper Motor*

4. Torque: Torque outputs are important for the ability to move wiper arms and blades across wet and often resistant glass surfaces. Torque specifications might range from 20 Nm to 50 Nm.
5. Speed: Wiper motors usually have multiple speed settings, often including at least two speeds and an intermittent operation mode. The exact speeds can vary, but they are designed to provide effective clearing of the windshield under different rain conditions.
6. Construction: The casing is typically robust, designed to be durable and resistant to water, dust, and vibration.
7. Integrated Features: Many modern wiper motors come with integrated electronics for

controlling speed and position, which can also interface with vehicle systems for automatic wiper control based on detected rainfall.

8. Duty Cycle: Wiper motors are designed for intermittent use but must be capable of operating continuously and reliably under adverse conditions without overheating.
9. Connector Type: The connectors are usually standardized for automotive applications, ensuring easy replacement and compatibility with vehicle electrical systems.
10. Mounting Configuration: The mounting typically includes specific brackets or bolt patterns that are standardized to fit various types of vehicles or are specific to a vehicle model.

### 3.1.3 Raspberry Pi 4 Model B:

The Raspberry Pi 4 Model B [8] is a huge leap over its predecessors in performance and versatility. The specifications are listed below:

#### 3.1.3.1 Specifications

1. Processor: The Raspberry Pi 4 Model B has a Broadcom BCM2711 SoC with a Quad-core Cortex-A72 (ARM v8) 64-bit SoC, which is clocked at 1.5 GHz. This is a massive increment in performance and is capable of doing tasks which were too demanding for the older models.
2. Memory: This comes in three RAM configurations of 2GB, 4GB, and 8GB LPDDR4-3200 SDRAM. This represents a significant jump in memory capabilities from earlier models and the ability to do more complex applications and multitasking.

*Figure 8: Raspberry Pi 4 Model B*

3. Connectivity:
   - Wi-Fi: dual-band 2.4GHz and 5.0 GHz IEEE 802.11b/g/n/ac wireless LAN.
   - Bluetooth: Bluetooth 5.0, BLE (Bluetooth Low Energy).
   - Ethernet: Gigabit Ethernet port in place that supports the speed up to 1000 Mbps, which is indeed remarkable and is far ahead of the 300 Mbps in the Raspberry Pi 3.
4. USB Ports: 2 x USB 3.0 ports, 2 x USB 2.0 ports. This has an added advantage in faster transfer of data in USB 3.0, which is useful for data storage, streaming, and interfacing with high-speed peripherals.
5. Video and Sound: 2 micro-HDMI ports supporting up to 4K resolution (4Kp60 or dual monitors at 4Kp30). With this, Raspberry Pi 4 will be mostly useful for media center applications as well as general computing. 4-pole stereo output and composite video port.

6. Multimedia:

   H.265 (4Kp60 decode);

   H.264 (1080p60 decode, 1080p30 encode);

   OpenGL ES 3.0 graphics.

7. Storage: Boot the operating system and save data to any Micro-SD card. For better performance, it is recommended to use with a card carrying a speed class of A1 and above.
8. Power Requirement: 5V DC* (minimum 3A) through USB-C or 5V DC* (minimum 3A) through GPIO Header (* higher power requirement supports increased capabilities).
9. GPIO: 40-pin GPIO header, fully backward compatible with the last boards, for rich peripheral interfaces, including SPI, I2C, serial UARTs, and more.

#### 3.1.3.2 Use Cases

- Desktop Replacement: This Raspberry Pi 4 may very well serve as a budget desktop for web browsing, word processing, and even some light gaming because of the improved processing power and memory capacity.
- Media Center: Hardware decoding of 4K video means this is perfect as a center for home media using software like OSMC or Plex.
- IoT Projects: It's an excellent device with great connectivity and a bunch of great GPIO pins for developing an Internet of Things project.
- Learning and Development: Low cost and great flexibility make it an excellent tool for learning programming and experimenting with DIY Electronics and Robotics.

#### 3.1.3.3 Operating Systems

The Raspberry Pi 4 can run most general-purpose operating systems. Many install Raspberry Pi OS, previously Raspbian, on them, but it is also able to support other Linux distributions, such as Ubuntu, and even specialized distributions for media centers, network storage, and its own lightweight versions of Windows 10 IoT.

### 3.1.4 Arduino Uno:

Arduino Uno[9], a popular microcontroller board used in electronics projects. Here’s a detailed look at the Arduino Uno, its specifications, and its uses:

Specifications of Arduino Uno

1. Microcontroller: ATmega328P
2. Operating Voltage: 5V
3. Input Voltage: 7-12V
4. Input Voltage (limits): 6-20V
5. Digital I/O Pins: 14 (of which 6 provide PWM output)
6. Analog Input Pins: 6
7. DC Current per I/O Pin: 20 mA
8. DC Current for 3.3V Pin: 50 mA

9. Flash Memory: 32 KB (ATmega328P) of which 0.5 KB used by bootloader
10. SRAM: 2 KB (ATmega328P)
11. EEPROM: 1 KB (ATmega328P)
12. Clock Speed: 16 MHz
13. LED BUILTIN: Pin 13

#### 3.1.4.1 Features

1 The Arduino Uno interacts with a computer through a USB cable, which could also power the board in case it wasn't powered from another source. It's also the connection used to upload code to the microcontroller.

2 ICSP Header: The In-Circuit Serial Programming (ICSP) header on the Arduino Uno allows for the bootloader to be updated or completely replaced.

3 Reset Button: This can be used to restart the microcontroller, which is useful during development.

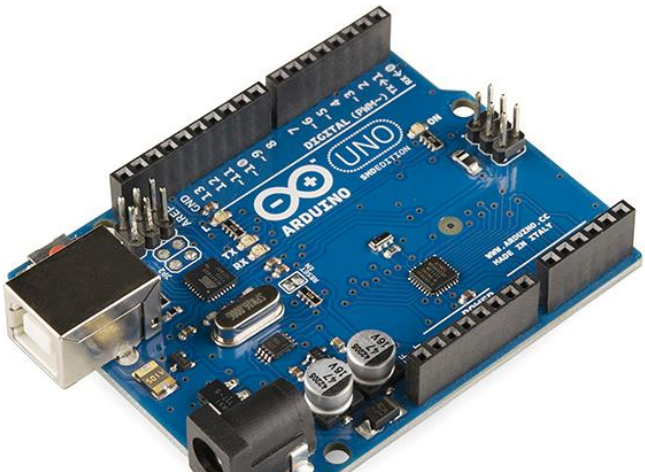

*Figure 9: Arduino Uno*

#### 3.1.4.2 Connectivity

1. The board hosts various interfaces for it to be connected to a host of sensors, actuators, and boards
2. Pins are digital and analog in nature: these make it connectable to the other components, be it the sensors or motors.
3. PWM Output: Several digital pins support the capability for Pulse Width Modulation (PWM), which comes in handy for applications involving the control of devices such as a servo motor or brightness in LEDs.
4. Serial Communication: The Arduino Uno can easily be used for serial communication through the pins or directly through the USB port; that is useful for many applications, including the interface between the board and a computer.

#### 3.1.4.3 Applications

1 Educational Projects: Arduino Uno is widely used in education for teaching basic and advanced concepts of electronics and programming.

2 Prototyping: It's an excellent tool for prototyping gadgets, devices, and creating small-scale automation systems.

3 Robotics: Due to its easy-to-use and flexible nature, it's often used in amateur robotics.

4 Home Automation: Arduino can control devices around the home like lights,

thermostats, and other home appliances.

#### 3.1.4.4 Programming

The Arduino Uno is based on ATmega328 microcontroller and is programmed using the Arduino IDE. The IDE has an interface that makes one write code, which can then be uploaded into the board. Besides, there's a large community surrounding this project; many resources are available along with tutorials, free codes for everybody, either beginners or skilled users.

Nevertheless, the Arduino Uno remains one of the favorites among DIY electronics enthusiasts because of the user-friendly interface and massive support, with an application to a large variety of usages.

### 3.1.5 IBT2:

The IBT-2 (also known as BTS7960) [10] is a high-power motor driver module, widely used in robotics and other applications where controlling large motors is required. It is known for its ability to handle high current loads efficiently and reliably. Here's a detailed overview of the IBT-2 module, its specifications, and uses:

#### 3.1.5.1 Specifications

1. Motor Driver IC: BTS7960
2. Operating Voltage: 6V to 27V
3. Maximum Current: Up to 43A (with proper heat sinking)
4. Control Inputs: Fully compatible with 3.3V and 5V logic (Arduino, Raspberry Pi, etc.)
5. PWM Capability: Yes, allowing speed control of the motor.
6. Double H-Bridge Design: Provides the ability to drive one high power motor in two directions with speed control, or two motors in one direction.

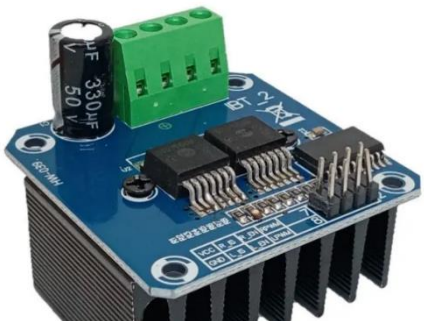

*Figure 10: IBT2*

#### 3.1.5.2 Features

1. High Current Handling: The BTS7960 motor driver IC can handle very high current, up to 43A, making it suitable for driving large motors.
2. Thermal Shutdown and Overcurrent Protection: Features protection mechanisms to ensure the longevity of the module and the safety of your setup.
3. Efficient Design: Utilizes an H-bridge design which is efficient for controlling the direction and speed of DC motors.
4. Isolated Heat Sinking: The module usually comes with a large heat sink to manage the heat generated by high currents.

#### 3.1.5.3 Connectivity and Control

1. Direction Control: You can control the direction of the motor by changing the logic level on the direction pins.
2. Speed Control: Speed can be controlled using PWM signals, which adjust the effective voltage applied to the motor by changing the duty cycle.
3. Logic Level Compatibility: The control pins can be driven by logic levels as low as 3.3V, making it compatible with a wide range of microcontrollers and development boards.

#### 3.1.5.4 Applications

1. Robotics: Used in robotic vehicles and other automated equipment where large motors are necessary.
2. Electric Vehicles: Suitable for DIY electric bikes, scooters, or small cars.
3. Heavy Duty Actuators: Can drive actuators that require substantial power, useful in large-scale automation or mechanical projects.
4. -Research and Development Projects: Often used in university projects and research applications where high-power motor control is necessary.

## 3.2 Software Components

### 3.2.1 Neuroexperimenter

#### 3.2.1.1 Introduction

The purpose of NEx is to explore brainwave output as you attempt different “mind states”, such as meditation, relaxation, concentration, etc. You can discover which combination of brainwaves characterize a mind state. You can train yourself to generate that state via visual and audio feedback. NEx has been used by high school students in science fair projects, college students and professors in their research, and by therapists investigating the efficacy of neurofeedback.

#### 3.2.1.2 Data Source

You can run the application without a headset by enabling the emulation mode, which generates random data. This is the default setting, but you can choose to log this data if needed. To use actual data from a headset, select the 'headset data' option, turn on the headset, and click 'connect'. The headset's LED should remain solid to indicate a successful connection.

If you need to pause the session while wearing the headset, simply click the 'pause' button. This will stop the processing of incoming samples and suspend both logging and reporting. If the connection to the headset is lost during pause, the session will end. However, if the connection is maintained, you can resume by clicking the same button, now labeled 'resume'. Note that no time is recorded in the baseline or performance sections until you resume.

You can also review past sessions by selecting 'replay log'. You'll need to specify an existing log file using the 'pick log file' button. The log can be replayed at increased speeds by adjusting the 'X multiplier'. For a quick review, set it to 25 for maximum

speed. To get an overview, extend the replay duration and increase the seconds displayed on the graph. During playback, you can pause and adjust the speed again on the parameters page, allowing you to jump to specific parts of the session and examine them in detail.

Before replaying a log, you can alter settings such as the performance wave type, the derived formula, and the grading logic to conduct various experiments on the same data. Note that timers from the original session, such as baseline and session splits, remain unchanged during log replay.

Logs saved in formats other than the ones supported by NEx (such as .csv) can be used in other applications like R, Python, or Excel.

Additionally, you can connect devices other than the MindWave using NexPipe. For more details, refer to Appendix 4.

Once a session has started with a selected input source—be it emulation, headset, or replay log—you cannot switch the input source.

#### 3.2.1.3 Logging

You have the option to save sample data into up to three separate logs, except when replaying an existing log. Select the desired logs by checking the appropriate boxes. Logs saved in "R format" are compatible with R, a free statistical system, and can also be used with the NEx software. For details on the log format for R, please refer to Appendix 4.

Additionally, you can create a log in "csv" format, which consists of comma-separated variables. This format is widely supported and can be easily imported into most spreadsheet programs and other applications. Python, in particular, offers extensive capabilities for analyzing csv logs.

Please note that only logs in the R formatted file can be used for the "replay" feature. Therefore, if you plan to replay a session, ensure you create a log in "R format".

#### 3.2.1.4 Class box

Log entries are categorized by "class," with an asterisk (*) appended to entries recorded during the baseline phase. Additionally, you can modify the class by pressing a single, printable character on your keyboard while NEx is connected to the headset. This new class will tag all subsequent samples until a different key is pressed, allowing you to label samples according to various external events (such as when music starts playing or when a subject begins to answer a question).

To analyze these tagged samples, you can create a program or use a spreadsheet that filters and processes the log data based on these event tags.

It's important to note that samples are captured approximately once per second. Therefore, the class will tag the next sample received by the headset, not the last sample taken. This timing should be considered when analyzing the timing and sequence of events in relation to the sample data.

#### 3.2.1.5 Timers

A session using the NEx system is typically divided into two segments: baseline and performance. The entire duration of the session is controlled by the session timer, with auditory chimes indicating the conclusion of the baseline period and the end of the session. When the session concludes, the headset disconnects automatically. You can

manually terminate the session at any point by clicking the connect/disconnect button. These chimes provide a convenient cue if you prefer not to continuously monitor the output graphs or your watch during the session.

The baseline timer marks the end of the baseline phase and commences the performance segment. If you prefer not to split the session into two distinct parts, simply set the baseline timer to zero. When the baseline timer is utilized, comparisons and summaries are automatically generated between performance and baseline data, offering insights into changes and trends.

It's important to note that the timers are fixed while the headset is connected and cannot be adjusted. Additionally, when the system is paused, no time is accrued by the timers, ensuring precise control over the session timing.

#### 3.2.1.6 Performance Feedback

For the "performance" segment of your session, you can choose a specific wave type to monitor. This chosen wave will be measured and its data will be provided back to you in real-time. Typically, the "Derived" wave form is selected as it provides comprehensive feedback. However, if no wave type is chosen, the feedback you receive will be limited.

#### 3.2.1.7 Performance Grading

You have the option to use default settings or set your own upper and lower values to define the grading logic. This grading logic helps determine how your performance is visualized, particularly on graphs where the minimum value may be shown as a red line. This setup is detailed further in Appendix 1. Keep in mind that once the session starts, the grading logic cannot be altered.

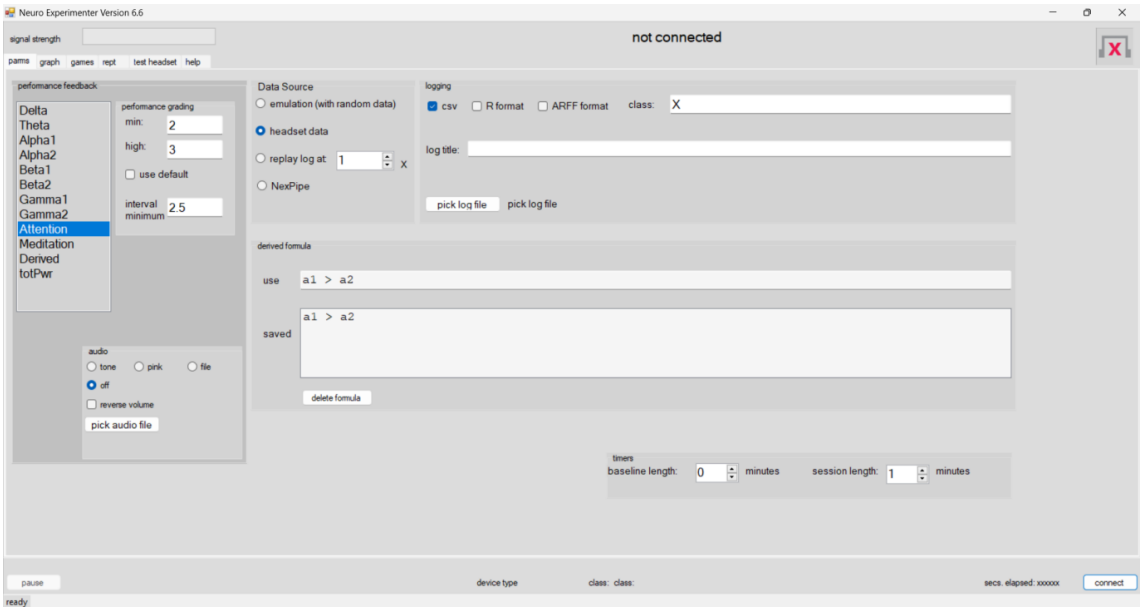


*Figure 11: Neuro Experimenter*

### 3.2.2 Collab

Google Colab, short for Google Colaboratory, is a cloud-based service that allows users to write and execute Python code through their browser. It's particularly popular for machine learning, data analysis, and education.

# Chapter Four

## METHODOLOGY

The development methodology of the BCW will use neural networks, and the following outline describes a procedural approach whereby advanced technologies may be brought in integration for the proper functioning of procedures and satisfaction of users. The first phase consists of an in-depth literature review on the existing Brain-Computer Interface (BCI) technologies, artificial neural networks, and their application in assistive devices. Thereafter, a high-quality EEG acquisition system was selected and consequently configured for acquiring relevant brain signals. Utilization of filtering and the pre-processing of artifact highly enhances the quality of the EEG data. Features extracted in the time domain and frequency domain are important for capture information that is cognitive in relation to the subject's intent.

The BCW is developed to realize a design and implementation for a logic controller that will interpret the extracted EEG features and issue the corresponding control commands. Neural rules are set in order to cope with the inherent uncertainty regarding the interpretation of the EEG signals. At the same time, the system must be adapted since a neural network classifier is trained by a dataset of labeled EEG features and control commands. Real-time integration with a logic controller and neural network ensures prompt and accurate translation of user intent into wheelchair movement.

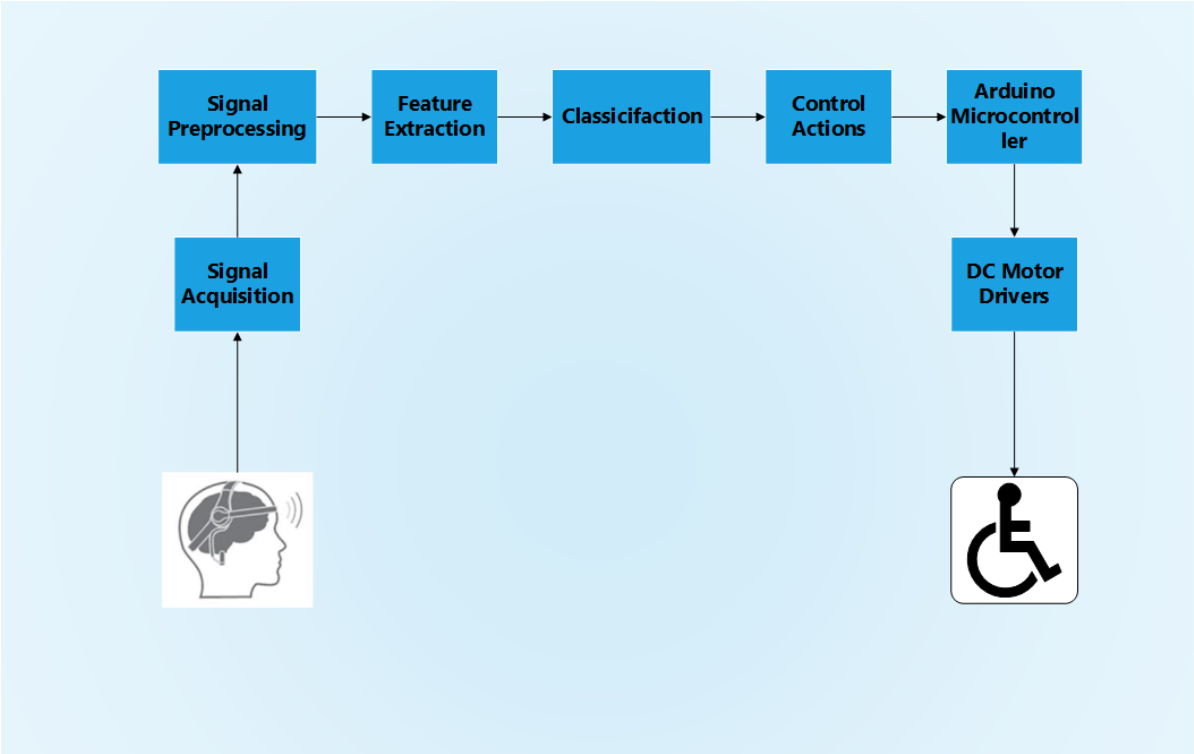


*Figure 12: General Methodology*

## 4.1 Conversion of Mechanical Wheelchair into Electrical Wheelchair

### 4.1.1 Arduino Uno

Arduino Uno's A0, A1, A2, A3,5,6,8,9,10,11,12 are used because of the following reasons:

A0-A3: These pins are analog pins which are used to read analog voltage levels from different sensors. In our project we are using them to get voltage values from push buttons and joystick.

5-9: These pins are digital pins which are usable in both modes input and output. In our project we have used as input for motor driver.

10: This pin is connected for speed control to the ENA of the motor driver.

11-12: These pins are connected to the left and right push button for direction control.

### 4.1.2 IBT2 Motor Driver

IBT2 Motor Driver pins VCC, GND, R_EN, L_EN, RPWM, LPWM pins are used because of the following reasons:

- VCC: This pin is used to power supply voltage for the motor driver.
- GND: This pin is used for ground reference for the motor driver.
- R-EN: This pin is used to enable/disable function for the right motor channel As an external signal drives this "R_EN" pin high, the right motor channel will turn on; when it is driven low, the right motor channel will be disabled.
- L_EN: This pin virtually turns the left motor channel on or off. If the "L_EN" pin is high, then the left motor channel is enabled; when it is low, the left motor channel is disabled.
- RPWM: This pin is used to control the speed of the motor that is connected to the right side of a dual-channel motor driver.
- LPWM: This pin is used to modulate the speed of the left side or channel motor driver.

### 4.1.3 DC Motor

- VCC: This pin is used to power supply voltage for the motor
- GND: This pin is used for ground reference for the motor.

### 4.1.4 Joystick

Joystick pins GND, +5V, VRX, VRY are used because of the following reasons:

- GND: This is the ground reference for the joystick circuit.
- 5V: This pin provides a 5-volt power supply to the joystick.

- VRX: This pin represents the X-axis output of the joystick's potentiometer. As you move the joystick along the X-axis, the voltage on this pin changes proportionally.

- VRY: This pin represents the Y-axis output of the joystick's potentiometer. Movement along the Y-axis changes the voltage on this pin.

### 4.1.5 General Circuit Explanation

1. Arduino Uno pin A0 AND A1 are connected to the joystick VRX and VRY.
2. Arduino Uno pin A2 AND A3 are connected to up and down push button.
3. Uno's 5,6,8,9 are connected to input pins of RPWM, LPWM, GND, VCC of motor driver.
4. Uno's pin 10 is connected to the enable pins i.e., R_EN, L_EN.

## 4.2 Data Collection

We have used Neurosky Mindwave Headset and placed it on the forehead at FP1 position then we connected the headset with the system. By using Neuro Experimenter, we gave the path to save the Csv File. Then we set the session length to 1min and started the session and asked the person to think as if the wheelchair is moving.

The program gives us the csv file in which it gives us record of different signals like Delta, Theta, Alpha, Beta, Gamma, Attention, Meditation, Blink etc.

| | A | B | C | D | E | F | G | H | I | J | K | L | M | N | O | P |
|---|---|---|---|---|---|---|---|---|---|---|---|---|---|---|---|---|
| 1 | obs | time | Delta | Theta | Alpha1 | Alpha2 | Beta1 | Beta2 | Gamma1 | Gamma2 | Attention | Meditatio | Blink | Derived | totPwr | class |
| 2 | 1 | 5.4 | 14259 | 52754 | 10100 | 26866 | 22671 | 45323 | 10362 | 4911 | 50 | 50 | 0 | 0.23 | 187246 | 1 |
| 3 | 2 | 6.4 | 16371 | 14081 | 24361 | 9927 | 17723 | 18507 | 3771 | 4385 | 57 | 74 | 0 | 0.47 | 109126 | 1 |
| 4 | 3 | 7.4 | 10279 | 27693 | 24490 | 14888 | 11327 | 17959 | 12987 | 5674 | 63 | 96 | 0 | 0.44 | 125297 | 1 |
| 5 | 4 | 8.4 | 102159 | 23480 | 2852 | 14697 | 6989 | 9693 | 11709 | 8400 | 67 | 100 | 0 | 0.13 | 179979 | 1 |
| 6 | 5 | 9.4 | 482310 | 57395 | 5872 | 8545 | 16720 | 16743 | 13654 | 4716 | 63 | 100 | 0 | 0.1 | 605955 | 1 |
| 7 | 6 | 10.4 | 330278 | 34126 | 9669 | 32303 | 11451 | 9415 | 19985 | 5331 | 54 | 100 | 51 | 0.15 | 452558 | 1 |
| 8 | 7 | 11.4 | 319821 | 71811 | 25856 | 36735 | 3943 | 24308 | 5987 | 5119 | 51 | 100 | 42 | 0.23 | 493580 | 1 |
| 9 | 8 | 12.4 | 396423 | 35753 | 4378 | 6965 | 8718 | 18680 | 20056 | 3774 | 56 | 81 | 0 | 0.09 | 494747 | 1 |
| 10 | 9 | 13.4 | 64449 | 14685 | 11274 | 13477 | 6026 | 17105 | 8685 | 5907 | 60 | 100 | 0 | 0.28 | 141608 | 1 |
| 11 | 10 | 14.4 | 484886 | 141294 | 78092 | 13343 | 10494 | 11367 | 8388 | 6431 | 53 | 97 | 0 | 0.32 | 754295 | 1 |
| 12 | 11 | 15.4 | 46994 | 29552 | 20043 | 12522 | 17534 | 17881 | 8004 | 8601 | 56 | 94 | 0 | 0.35 | 161131 | 1 |
| 13 | 12 | 16.4 | 392585 | 86261 | 15112 | 15863 | 51334 | 14082 | 14603 | 4112 | 48 | 97 | 0 | 0.16 | 593952 | 0 |
| 14 | 13 | 17.4 | 3314 | 6823 | 13002 | 32579 | 11701 | 23221 | 16062 | 5433 | 48 | 100 | 0 | 0.34 | 112135 | 0 |
| 15 | 14 | 18.4 | 59064 | 82982 | 34418 | 111053 | 25465 | 29195 | 9210 | 4129 | 54 | 100 | 56 | 0.31 | 355516 | 1 |
| 16 | 15 | 19.4 | 2657894 | 184666 | 32649 | 53485 | 52513 | 29099 | 11009 | 3133 | 50 | 91 | 0 | 0.1 | 3024448 | 1 |
| 17 | 16 | 20.4 | 169155 | 23272 | 4677 | 4486 | 4659 | 2136 | 3538 | 1205 | 47 | 93 | 0 | 0.15 | 213128 | 0 |
| 18 | 17 | 21.4 | 42240 | 69452 | 28447 | 21046 | 24389 | 14812 | 9013 | 5617 | 37 | 81 | 0 | 0.36 | 215016 | 0 |
| 19 | 18 | 22.4 | 138350 | 41671 | 27394 | 30318 | 13527 | 8096 | 6586 | 4627 | 34 | 80 | 53 | 0.32 | 270569 | 0 |
| 20 | 19 | 23.4 | 152137 | 161536 | 37571 | 22359 | 33711 | 7185 | 9592 | 5595 | 26 | 80 | 0 | 0.3 | 429686 | 0 |
| 21 | 20 | 24.4 | 35077 | 40116 | 5767 | 13214 | 10738 | 9751 | 6930 | 3816 | 30 | 81 | 0 | 0.21 | 125409 | 0 |
| 22 | 21 | 25.4 | 37763 | 36039 | 2867 | 11709 | 11478 | 10780 | 10083 | 4291 | 35 | 74 | 0 | 0.15 | 125010 | 0 |
| 23 | 22 | 26.4 | 334811 | 10278 | 2478 | 9055 | 7292 | 3482 | 3616 | 1216 | 40 | 64 | 0 | 0.08 | 372228 | 0 |
| 24 | 23 | 27.4 | 6601 | 45010 | 11978 | 4349 | 32467 | 12721 | 13295 | 4998 | 53 | 57 | 0 | 0.3 | 131419 | 1 |
| 25 | 24 | 28.4 | 223196 | 154003 | 18526 | 36241 | 10930 | 17055 | 11908 | 4686 | 48 | 56 | 0 | 0.2 | 476545 | 0 |
| 26 | 25 | 29.4 | 42229 | 58111 | 19410 | 15301 | 6596 | 16177 | 17133 | 5946 | 47 | 64 | 0 | 0.33 | 180903 | 0 |

*Figure 13: Dataset*

After the acquisition of the signals we classify the signals into different classes.

## 4.3 Types of signals

| EEG Band | Description |
|---|---|
| Delta (1-4 Hz) | Delta waves are generally generated by the brain during deep sleep. |
| Theta (4–8 Hz) | Theta waves are generally generated by the brain under emotional tension, stress, etc. |
| Alpha (8–13 Hz) | Alpha waves are released when the brain is in inactive state or relaxed |
| Beta (13–30 Hz) | Beta waved are released by the brain during active thinking, focus or solving a problem. |
| Gamma (30–50 Hz) | These waves are released by the brain during conscious perception. |
| Attention | Measures mental focus and concentration. High values indicate intense attention. Useful in learning and meditation applications. |
| Meditation | Assesses mental calmness and relaxation. Higher values signify more relaxed states, ideal for stress management and mindfulness practices. |
| Blink | Detects eye blinks as discrete neural events. Used for interacting with applications and as a metric in user engagement studies. |

*Table 7: Obtained type of signals*

## 4.4 Preprocessing of Dataset

### 4.4.1 Loading the Data

Multiple CSV files are loaded into individual Pandas DataFrames. The file paths are specified in a list and each file is read using pd.read_csv().This step assumes that each file has a consistent structure that will allow them to be combined easily.

### 4.4.2 Combining the DataFrames

All the individual DataFrames are concatenated into one large DataFrame using pd.concat(). The ignore_index=True parameter is used to reindex the new combined DataFrame, ensuring the indices are unique and sequential across the concatenated data.

### 4.4.3 Cleaning Column Names

Column names are stripped of any leading or trailing spaces using combined_df.columns.str.strip(). This helps in avoiding any potential issues when referencing column names that might accidentally include unwanted spaces.

### 4.4.4 Updating the 'class' Column

A new 'class' column is created by evaluating the 'Attention' column. Here, if the

'Attention' level is greater than 50, it assigns a value of 1 (indicating high attention); otherwise, it assigns a value of 0 (low attention). This transformation turns the problem into a binary classification task.

This binary label is generated using the expression (combined_df['Attention'] > 50).astype(int), which checks each row's 'Attention' value, compares it to 50, and converts the resulting Boolean values (True or False) to integer values (1 or 0).

#### 4.4.5 Feature Selection

The features (X) for the model are selected as the 'Attention' column, encapsulated in a list to maintain it as a DataFrame slice. This ensures that the feature set remains 2-dimensional, which is required by scikit-learn's model API.

The target (y) for the model is the 'class' column, indicating whether the attention level is above or below 50.

#### 4.4.6 Splitting the Dataset

The dataset has been divided into training and testing with the train_test_split() function. Data is divided into the ratio of 70% for training and 30% for testing. It is a well-known and implementable split ratio in such a way that the model learns effectively, and we get good evaluation of how this model would perform on new data.

The parameter random_state is set to 42 because this number allows splits to be reproducible. That way, it would allow the splitting of data in a random fashion to become stable by running code for debugging and conducting consistent performance estimation.

### 4.5 Machine Learning Model Used

#### 4.5.1 SVM

##### 4.5.1.1 Features of SVM

1. High-dimensional space: Effective in high-dimensional spaces; more effective in cases when the dimensionality of the data space is greater than the number of samples.
2. Memory-efficient: It is memory-efficient because the decision function depends only on the subset of training points used.
3. Flexible: SVM embraces several kernel functions for the sake of decision-making, which include linear, polynomial, radial basis function, and sigmoid.
4. Regularization parameter: The SVM regularization parameter with a very high penalty for large coefficients is usually the one which prevents eventual overfitting.
5. Works well with small datasets: SVM works effectively for small- to medium-sized datasets in which the features are greater in number than samples.

##### 4.5.1.2 Advantages of SVM

1. High-dimensional input space: SVM works well in multifeatured datasets, such as those used in text classification or image recognition.
2. Memory efficient: SVM is efficient with memory in a way that it makes use of the subset of training points in a decision function.
3. Overfitting resistant: SVM has a regularization parameter. Hence, it is less sensitive to noise in the training data that would cause overfitting to go very deep.

4. Flexible: SVM is highly flexible in using many kernel functions, which work through many different types of data and decision boundaries.
5. Small Datasets: SVM works well for small and medium datasets with the number of features larger than the number of samples.

#### 4.5.1.3 Disadvantages of SVM

1. Not suitable for large datasets: SVM can be impractical for very large datasets due to its high computational cost.
2. Parameter selection: SVM is very sensitive to hyperparameters selection, i.e., Kernel and regularization parameter.
3. Limited interpretability: SVM's decision function is not very interpretable, so the reasons behind the classification are barely understandable.
4. Noise Sensitivity: SVM is sensitive to noise in training cases, which affects performance.
5. Binary classification: Fundamentally, SVM is a binary classifier, and it becomes pretty cumbersome to perform multiclass classification based on this model.

### 4.5.2. LDA

#### 4.5.2.1. Features of LDA

1. Class separability: LDA attempts to maximize the ratio of between-class variance to within-class variance for features in a dataset, ensuring maximum separability.
2. Dimensionality reduction: It reduces the number of dimensions (features) of the data, but it maintains the information that distinctly distinguishes the output classes.
3. Linear decision boundaries: LDA is generally known for producing linear decision boundaries, and hence mathematical calculations in the process of classification are quite simple and quick.
4. Model simplicity: The data must be Gaussian distributed in such a way that the calculation is simplified by assuming the fitting of the mean and variance from the data.

#### 4.5.2.2. Advantages of LDA

1. Simplicity: Hence, the LDA algorithm is simple to understand and easy to be implemented, therefore quite accessible in application.
2. Efficiency: The LDA algorithm is computationally efficient, and it can be compared with some of the complex nonlinear classifiers.
3. Gaussian-distributed Data: If the data distribution tends to be normal and the classes have similar covariance matrices, LDA performs quite well.
4. Well Suited to Multi-class Problems: LDA can easily manage multi-class problems unlike some other classifiers.

#### 4.5.2.3. Disadvantages of LDA

1. Assumption of Normality: LDA assumes that the predictors or independent variables are normally distributed. The classifier performs poorly if the assumption is violated.

2. Assumption of Equal Covariances: The assumption of homogeneity of covariance matrices in LDA is crucial for establishing equal covariance, and a nullification of this assumption might degrade the classification.
3. Susceptibility to Outliers: LDA is a mean- and variance-dependent technique; thus, it is sensitive to outliers, which will result in bias in the estimate of mean and variance.
4. Not Suitable for Non-linear Problems: LDA gives linear decision boundaries, so it is not suitable for a dataset showing complex and non-linear relationships.
5. Dimensionality: High-dimensional spaces may cause the so-called 'curse of dimensionality' to LDA; it also can have problems with the number of features being larger than the number of samples.

### 4.6 Comparison Table of the Model

| Feature | Support Vector Machine (SVM) | Linear Discriminant Analysis (LDA) |
|---|---|---|
| Purpose | Classification and regression | Classification and dimensionality reduction |
| Methodology | Finds the hyperplane that maximizes the margin between different classes. | Finds a linear combination of features that best separates two or more classes. |
| Assumptions | Few assumptions about the data distribution. | Assumes data is normally distributed within each class. |
| Data Scalability | Effective in high dimensional spaces, but can be slow with large datasets. | More efficient with large datasets but can underperform with high-dimensional data unless dimension reduction is applied first. |
| Sensitivity to Outliers | Relatively robust to outliers in the data. | Sensitive to outliers because it uses mean vectors and covariance matrices. |
| Decision Boundary | Non-linear boundaries possible using kernel trick. | Linear boundaries only, though can be extended to non-linear with kernel tricks in some implementations. |
| Parameter Tuning | Often requires tuning of parameters like the | Fewer parameters to tune, typically involves |

| | | |
|---|---|---|
| | regularization parameter and kernel. | choosing solver or regularization method. |
| Typical Use Case | Complex classification problems, especially binary classification. | Comparatively simpler classification tasks or when linear separability is assumed. |
| Performance Metrics | Accuracy, precision, recall, F1-score, etc. | Accuracy, precision, recall, F1-score, etc., also used to analyze discriminant functions. |
| Computational Complexity | Higher due to solving quadratic programming problems. | Lower, primarily involves matrix operations. |
| Accuracy Achieved | 97% | 65% |

*Table 7: Comparison Table of the Models Used*

Therefore we used SVM model in our project as we achieved the got more accuracy than LDA.

**4.7 Training Process**

Process of training: The binary target variable classifier is used by the SVM from the scikit-learn library to form a model and predict. Here are the detailed walk-throughs of the steps:

1. Initializing the Model:

   We will instantiate an SVM model with `SVC(kernel='linear')`. The `SVC` stands for Support Vector Classifier, and this is the class we'll import from scikit-learn's support vector machine module. The parameter `kernel='linear'` specifies that we want a linear kernel to be used with the decision function. Unless the data is clearly not linearly separable or when simplicity and performance need to be favored over capturing intricate structures in the data, this is what is used.

2. Training the Model:

   - The `fit` method trains the model using the training data `X_train` and the labels `y_train`. This is done by looking for the optimal hyperplane that separates the classes in your feature space.
   - `X_train` are the features, in your case—the 'Attention' values of your dataset—reshaped into a two-dimensional array in the way that it is wanted by Scikit.
   - `y_train` is the binary class labels, obtained from whether 'Attention' values garthered scored above or below 50.
   - Train the SVM model with a maximum margin between the two classes, and learn its weights in the training process with the linear kernel.

3. Predicting Test Labels:

After training the model, it is going to do predictions on the test set by applying the method `predict`. The latter implements the trained model over `X_test`, which was saved for the testing subset of the dataset to approximate the labels. In this sense, the predictions (`y_pred`) are what one could call the classification decision by the model in view of the learned decision boundary.

4. Evaluating the Model:

- The model will be scored with the use of two evaluation metrics:
- Accuracy: Computed as `accuracy_score(y_test, y_pred)`, it tells a person the proportion of correct predictions out of all made. It is a simple measure of how often the model is correct.
- Classification Report: This report is built by using the function `classification_report(y_test, y_pred)`, and from it, one can get a more descriptive performance analysis: precision, recall, f1-score, support for each class. These will be useful to get a deep insight into performance, especially with class imbalance or where the false positives and false negatives would have different implications.
- Precision is the accuracy of the positive predictions.
- The recall or sensitivity represents the ability of the classifier to identify all positive samples.
- F1-score is the weighted harmonic average between precision and recall that is useful to compare between two classifiers.
- Support is the actual number of occurrences of the class present in the given data set.

## 4.8 Evaluation Metrices

### 4.8.1 Accuracy

Accuracy here is a measure of how many observations are correctly predicted against the total number of observations and is not class-dependent. It remains a good measure when classes are balanced in a dataset, but it can mislead in the case of class imbalance.

### 4.8.2 Confusion Matrix

A confusion matrix is a table used to describe the performance of a classification model on a set of test data for which true values are known. It allows us to visualize how such an algorithm performs. These four terms are found within a confusion matrix:

- True positives (TP) refer to actual positive outcomes that are correctly predicted.
- True Negatives (TN): Number of results correctly predicted as negative.
- False Positives (FP) - The number of outcomes in which a positive prediction was made, but the actual.
- False Negatives (FN): The number of really positive results which are given a negative prediction.

### 4.8.3 Classification Report

The classification report presents precision, recall, f1-score, and support in a table form for each class in the dataset. It provides a better view of overall model performance than

the previous measures due to the following terms that are available in the classification report:

- Precision: The ratio of correctly predicted positive observations to the total predicted positives. Precision is the measure of correctness in positive prediction.
- Recall is the ratio of correctly predicted observations to the actual population of the class. Recall is a metric of how many actually relevant results are returned.
- F1-Score: The weighted average of Precision and Recall: it takes both false positives and false negatives into account. It is a good measure of the model's accuracy.
- Support: the number of occurrences of the class in the actual data set given.

```
Confusion Matrix:
[[64  0]
 [ 4 87]]
Cross-validation Scores:
[1. 1. 1. 1. 1. 1. 1. 1. 1. 1.]
Mean Cross-validation Score:
1.0
Classification Report:
              precision    recall  f1-score   support

           0       0.94      1.00      0.97        64
           1       1.00      0.96      0.98        91

    accuracy                           0.97       155
   macro avg       0.97      0.98      0.97       155
weighted avg       0.98      0.97      0.97       155

Predictions:
[1 1 1 0 0 0 0 1 1 0 1 1 0 1 0 1 1 0 1 1 1 1 1 1 0 0 0 0 1 1 0 1 1 0 0 0 1
 0 0 1 0 0 0 0 0 1 0 1 1 1 1 0 1 1 0 0 0 1 1 1 0 1 0 1 1 1 0 1 0 0 0 0 1 1
 1 1 0 1 0 0 1 1 1 0 0 1 0 0 0 1 1 1 0 1 1 1 1 0 1 1 0 1 1 1 1 1 0 1 1 1 1
 0 0 1 1 1 1 0 1 0 1 0 1 1 0 0 1 1 0 0 0 0 0 1 0 1 1 0 1 1 0 1 0 0 0 1 0 1
 0 1 1 1 1 0 1]
```

*Figure 14: Classification Report*

### 4.9 Serial Communication between Raspberry pi 4 and Arduino Uno

**Step 1: Collecting Brain Signals**

In this setup, the user wears a Neurosky headset that senses the activity of the brain. When specific thoughts or brain states are realized, it generates predefined commands, for example, "Move forward" or "Turn right". The Neurosky headset processes the electrical impulses and translates them into digital commands which it sends to the Raspberry Pi.

**Step 2: Processing with Raspberry Pi**

It picks up the user's voice commands and sends them over Bluetooth to the Raspberry Pi from the Neurosky headset. These commands are processed by the Pi to determine what actions for the wheelchair respond. In this aspect, this may necessitate many things outside the extra logic or decision processes, such as from object avoidance to path planning.

**Step 3: Sending Commands to Arduino**

There is a serial connection between the Raspberry Pi and the Arduino. Hardware Setup: Connect the TX pin of the Pi to the RX pin of the Arduino. Then, connect the RX pin of the Pi to the TX pin on the Arduino. The GND pins likely need to be connected as well. Programs a Raspberry Pi: You are able to program a Raspberry Pi by utilizing any programming language, such as Python, to open and then use the serial port. Libraries such as

pyserial will be used to send the serial data to Arduino. Arduino Programming: Write a sketch to read the serial data incoming from the Raspberry Pi by using the 'Serial' object in Arduino to parse incoming commands.

**Step 4: Executing Commands on Arduino**

The Arduino is hooked up to and controls motors with the given command in a way that takes into account parameters such as speed and direction through a motor-driving circuit. In the reverse direction, any feedback from the wheelchair, like motor status or sensor data, can be sent back to the Raspberry Pi for logging or decision-enhancing enhancements.

# Chapter Five

# TESTING

## 5.1 Testing Based upon Predictions of the model

After training and validation of the SVM model the predictions received from it was then used to test the model and to move the DC Motors. For this we created a circuit using Raspberry pi and the circuit previously created to move the wheelchair using Arduino UNO. We than established the serial communication between the two microcontrollers as predictions will come from Raspberry pi and will be given to Arduino Uno. Arduino will move the DC motors according to predictions received from the model.

## 5.2 Testing in Real Time

After the testing the motors on predictions of the model, then started the process to test the wheelchair on real time. For this we took the following steps

### 5.2.1 Bluetooth Connection of Headset

First, we connected the headset with Bluetooth to the raspberry pi 4. We made sure that the connection is stable and continuous and connects automatically.

### 5.2.2 Signal Processing

It involves signal processing to filter and extract relevant EEG features from raw data. These features are quite necessary for the proper prediction of commands.

### 5.2.3 Real-time Predictions

Update the script to use the SVM model for predicting wheelchair commands based on the pre-processed EEG signals.

### 5.2.4 Serial communication with Arduino Uno

Serial communication is necessary because Arduino can control motors and sensors installed in the wheelchair in real time, whereas raspberry pi will handle complex tasks like the EEG data being utilized for making predictions by SVM.

# Chapter Six

# PROPOSED APPLICATIONS

Brain-controlled wheelchairs are one of the areas where the most promising neuroscience, technology, and human needs come together with great promise to revolutionize ways for aiding people with the most limiting physical disabilities to have more independence and quality in their lives. This paper aims at reviewing potential applications of brain-controlled wheelchairs, taking into account their use-revolutionary impact and the necessary safeguards to grant successful employment.

## 6.1 Medical Rehabilitation Centers

BCWs find applications in assessment of neuro-recovery. The patients with stroke and spinal injuries, in this light, must undergo intensive neurological therapy in order to gain back the motor functions or improve the motor functions besides creating neurological linkage. BCW could be used in:

- Neuroplasticity can be elicited through tasks such as navigating a wheelchair, which actively engages the brain for important neural pathways in recovery.
- Encouragement of Patients: Assisting in self-locomotion can boost the morale of a person and improve mental health, which is an essential part of rehabilitation.
- Monitoring the process of progress: Integrated software can analyze command patterns and response time, thus providing therapists with current data on the neurologic recovery of the patient.

## 6.2 Assisted Living Facilities

For residents at assisted-living centers with motor-limiting conditions, BCWs can represent a new level of independence because of their ability to independently move throughout a space unassisted.

- The usefulness of this application is Reduces caregiver burden: Whenever residents are encouraged to become independent in this movement, caregivers feel relieved and able to engage in other important activities in care.
- Improved quality of life: Independence in mobility can carry with it social activities and community participation, which are both important for mental health.

## 6.3 Home Use

At home, BCWs can make huge changes in the day-to-day lives of people with profound disabilities:

- Activities of daily living: Users are enabled to move about their homes, visit the surrounding areas, and take part in the life of the family.
- Personalized for individual needs: Customization can be done in wheelchairs for recognition of the specific neural pattern of the user, which increases responsiveness and reliability.

## 6.4 Research and Cognitive Sciences

Hence, BCWs are functional mobility devices and valuable research tools in cognitive neuroscience and rehabilitation science. They can perform:

- Research about brain-machine interfaces (BMIs): The manner in which the brain communicates and adapts to a certain device.
- Improve algorithms: With more use it will allow data collection which can potentially help improve how the neural signals are interpreted to lead to better responsiveness of the wheelchair.

### 6.5 Emergency Evacuation in Healthcare Facilities

In instances of emergency, BCWs assist in the movement of patients unable to move independently to be moved:

- Quick evacuation: A patient can evacuate danger zones on their own, thus taking less time.
- Optimize resource allocation: For patients who can move around the health facility independently, staff could, therefore, pay attention, as soon as possible, to patients in more serious conditions in an emergency.

### 6.6 Integration with Smart Home Technologies

When implemented with smart home technologies, BCWs can make a dwelling space highly responsive to the needs of persons with disabilities:

- Smooth control: The user could operate not only the motion of the user but also other factors from the identical interface, such as doors, lights, and electronic devices.
- Voice commands and automation: Integrated with AI voice assistants, it can offer multiple ways of interacting with the environment to the users.

### 6.7 Public Accessibility

BCWs implemented in public infrastructures can bring inclusiveness and accessibility.

- Transport and facilities: designing public-transport systems and facilities to be BCW-accommodating may encourage more societal participation among persons with severe mobility restrictions.
- Awareness and acceptance: Public encounters with high-tech assistive devices on a regular basis would help in making people more informed and accustomed to disabilities.

# Chapter Seven

# RESULTS

## 7.1 Simulation Result

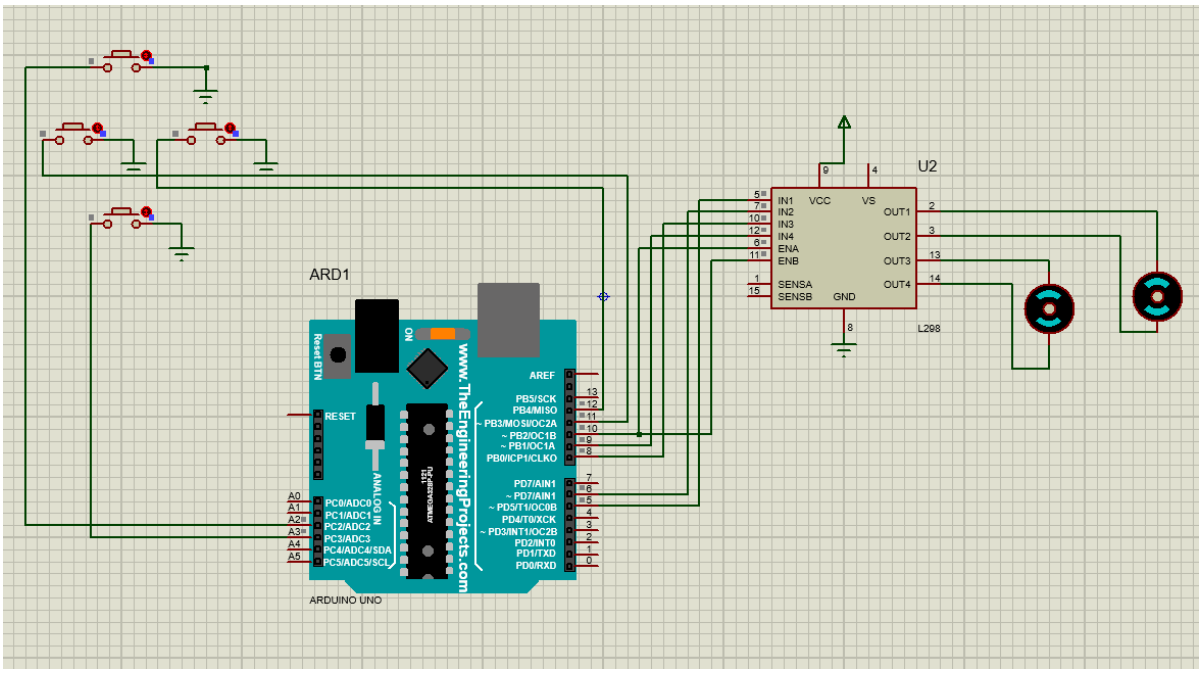


*Figure 15: Simulation Result*

## 7.2 Accuracy of the LDA Model

```
Training Accuracy: 0.60%
Testing Accuracy: 0.65%
```

*Figure 16: Model Accuracy using LDA*

## 7.3 Accuracy of the SVM Model

```
Training Accuracy: 0.9554317548746518
Testing Accuracy: 0.9741935483870968
```

*Figure 17 Model Accuracy Using SVM*

# REFERENCES


[1] Awais, M. A., Yusoff, M. Z., Yahya, N., Ahmed, S. Z., & Qamar, M. U. (2020). Brain controlled wheelchair: a smart prototype. *Journal of Physics. Conference Series*, *1529*(4), 042075. https://doi.org/10.1088/1742-6596/1529/4/042075

[2] Patel, M., & Bhavsar, R. (2017). Design and Implementation of Brain Controlled Wheelchair. *International Research Journal of Engineering and Technology*, *4*(3), 599-602. Retrieved from https://www.irjet.net

[3] Guin, A., & Baishya, B. B. (2013). Brain controlled wheelchair using LabVIEW. Thesis, SRM University. https://doi.org/10.13140/RG.2.1.4303.7686

[4] Abiyev, R. H., Akkaya, N., Aytac, E., Günsel, I., & Çalman, A. (2016). Brain-Computer Interface for Control of Wheelchair Using Fuzzy Neural Networks. *BioMed Research International*, *2016*, Article ID 9359868, 9 pages. https://doi.org/10.1155/2016/9359868

[5] Sahat, N., Alias, A., & Yassin, F. M. (2021). Wheelchair controlled by human brainwave using brain-computer interface system for paralyzed patient. *Bulletin of Electrical Engineering and Informatics, 10*(6), 3032-3041. https://doi.org/10.11591/eei.v10i6.3200

[6] *MindWave*. (n.d.). https://store.neurosky.com/pages/mindwave

[7] *Table 1 Technical Specifications of DC Wiper motor P/N 1020.* (n.d.). ResearchGate. https://www.researchgate.net/figure/Technical-Specifications-of-DC-Wiper-motor-P-N-1020_tbl1_262373169

[8] Raspberry *Pi 4 | Edge Impulse Documentation*. (n.d.). https://docs.edgeimpulse.com/docs/edge-ai-hardware/cpu/raspberry-pi-4

[9] Electrobes. (2024, June 1). *Arduino UNO R3 Atmega328P Development Board in Pakistan*. Electrobes | Electronics Store in Islamabad, Pakistan, to Buy Arduino, 3D Printers, Cameras Etc. https://electrobes.com/product/arduino-uno-r3/

[10] Hessmer, A. D. R. (2013, December 28). *IBT-2 H-Bridge with Arduino – Dr Rainer Hessmer*. https://www.hessmer.org/blog/2013/12/28/ibt-2-h-bridge-with-arduino/