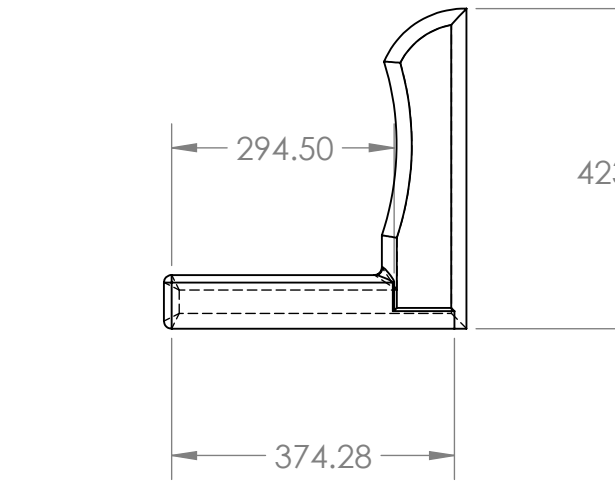

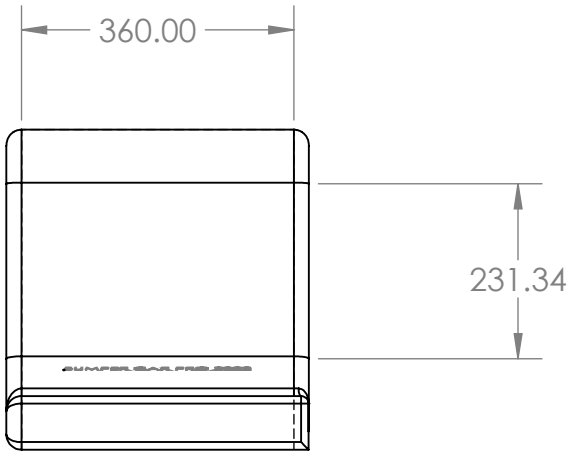

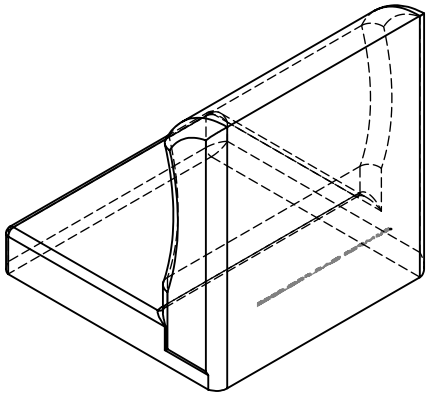

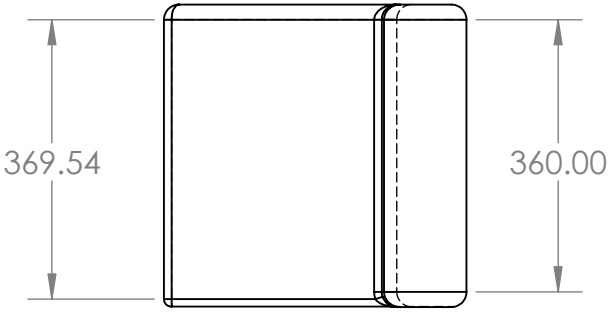

UNLESS OTHERWISE SPECIFIED: DIMENSIONS ARE IN MILLIMETERS SURFACE FINISH: TOLERANCES: LINEAR: ANGULAR:	FINISH:			DEBURR AND BREAK SHARP EDGES	DO NOT SCALE DRAWING / REVISION
	NAME	SIGNATURE	DATE		TITLE:
DRAWN	Pedro Fabian		19/01/22		
CHK'D	Pedro Fabian		19/01/22		
APPV'D					
MFG					
Q.A				MATERIAL:	DWG NO. Seat car — A4
				WEIGHT:	SCALE:1:10 — SHEET 1 OF 1