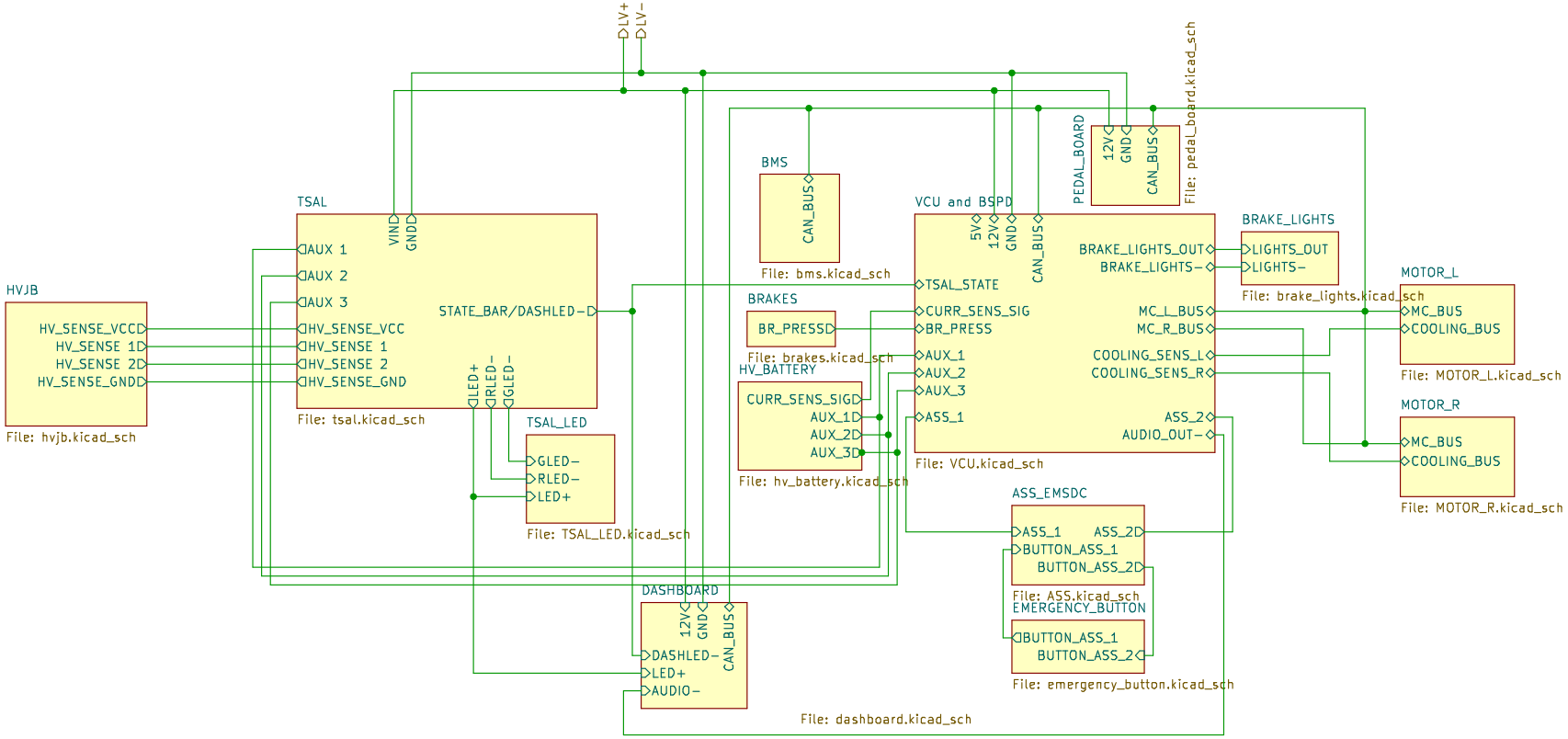

Electronics team
Hugo Berg, Becky Hu, Lianfeng Shi
Oxford University Racing

Sheet: /
File: wiring_diagram_1.kicad_sch

Title: LV Subsystem Interconnections

Size: A4	Date: 2022-03-16	**Rev: 0.1**
KiCad E.D.A. kicad (6.0.2)		Id: 1/15