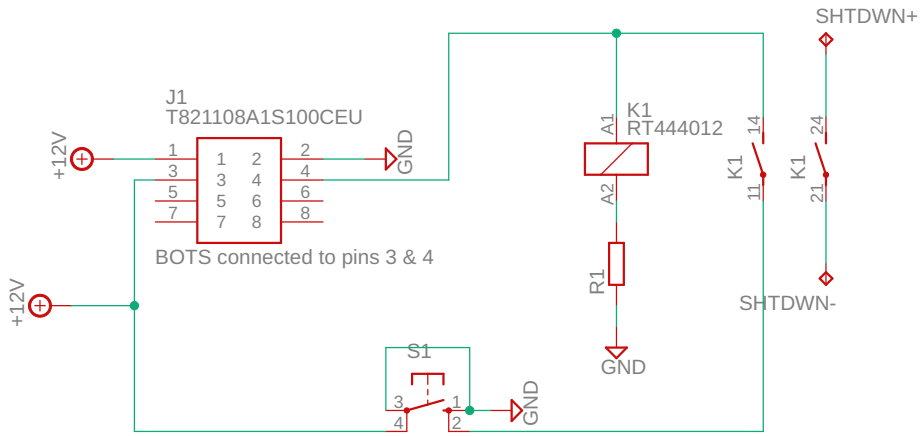

Jack Bruford - OUR

BOTS_Latch

18/12/2018 13:54

Sheet: 1/1