计算机体系结构

周学海
xhzhou@ustc.edu.cn
0551-63492149
中国科学技术大学

Review

- **指令级并行(ILP)：流水线的平均CPI**
  - Pipeline CPI = Ideal Pipeline CPI + Struct Stalls + RAW Stalls + WAR Stalls + WAW Stalls + Control Stalls +……
  - 提高指令级并行的方法
    - 软件方法：指令流调度，循环展开，软件流水线，trace scheduling
    - 硬件方法
- **软件方法：指令流调度-循环展开**
    - 指令调度，必须保证程序运行的结果不变
    - 寄存器的重命名
    - 循环步长的调整
    - 偏移量的修改
    - 保证存储器访问无冲突

第5章 指令级并行

5.1 指令级并行的基本概念及静态指令流调度

ILP及挑战性问题

软件方法挖掘指令集并行

5.2硬件方法挖掘指令级并行

5.2-1 指令流动态调度方法之一：Scoreboard

5.2-2 指令流动态调度方法之二：Tomasulo

5.3 分支预测方法

5.4 基于硬件的推测执行

5.5 存储器访问冲突消解及多发射技术

5.6 多线程技术

5.2-1 指令流动态调度方法：Scoreboard

记分牌
技术要点

示例

硬件方案: 指令级并行

- **为什么要使用硬件调度方案?**
  - 在编译时无法确定的相关，可以通过硬件调度来优化
  - 编译器简单
  - 代码在不同组织结构的机器上，同样可以有效的运行
- **基本思想: 允许 stall后的指令继续向前流动**

```
DIVD    F0,F2,F4
ADDD    F10,F0,F8
SUBD    F12,F8,F14
```

  - 允许乱序执行（out-of-order execution） => 乱序完成（out-of-order completion）

硬件方案之一: 记分牌

- **记分牌的基本概念示意图**

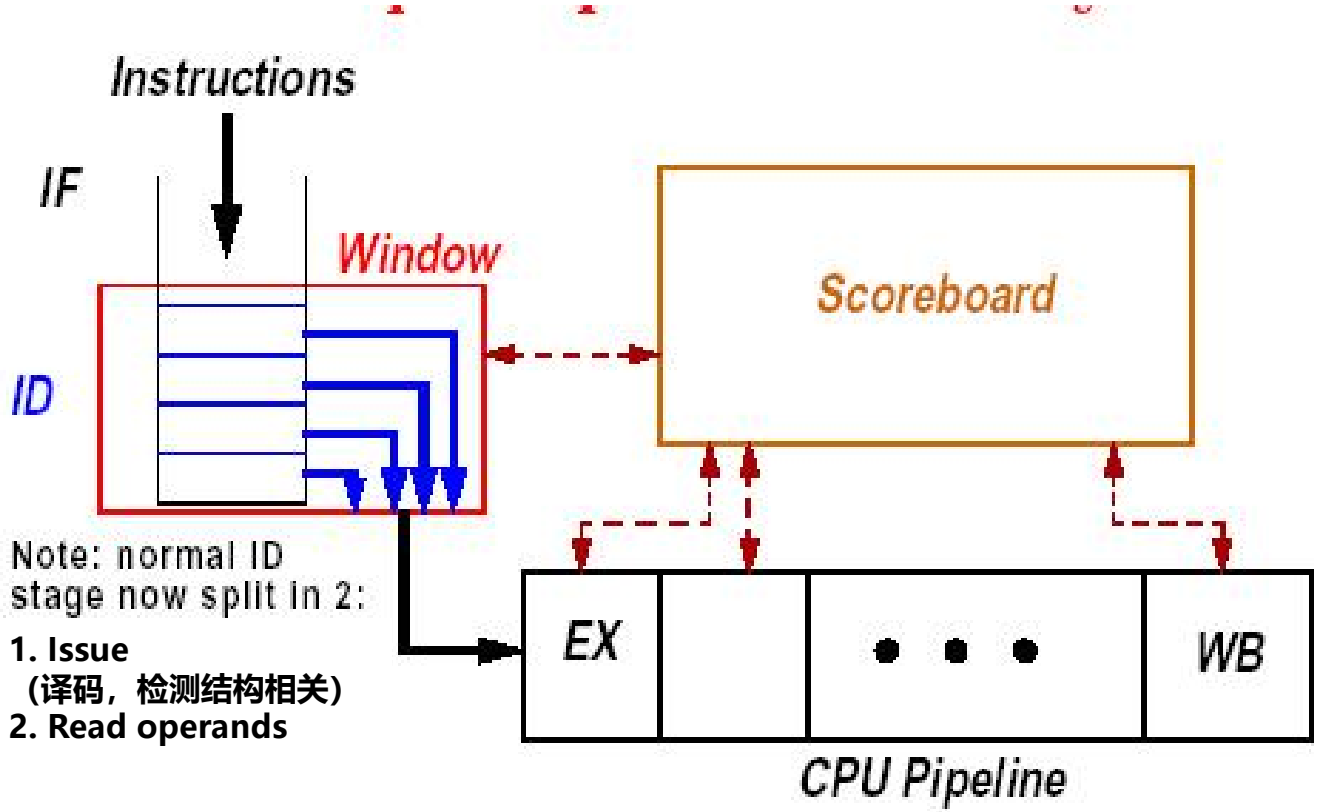

记分牌技术要点(1/2)

- **Scordboard技术将ID 段分为:**
  - Issue—译码，检测结构相关
  - Read operands—**等待到无数据相关时，读操作数**
- **起源于1964年Control Data Corporation推出的CDC6600: 顺序发射，乱序执行，乱序完成，没有采用定向技术，只实现非精确中断**
  - Ten Functional Unit
    - Floating ADD, Floating Multiply(2), Floating Divide
    - Fix ADD, Increment (2), Boolean, Shift, Branch
  - Ten Peripheral Processors for Input/Output: a fast time-shared 12-bit integer ALU
  - Load /store结构
- **集中相关（冲突）检查(Scoreboard)，互锁机制（interlock）解决相关**
  - 一种装置，其中一个部分或机构的运转自动地导致或阻止另一个部分的运转
- **采用这种技术的微处理器企业**
  - MIPS，HP， IBM
  - Sun 公司的UltraSparc
  - DEC Alpha

CDC 6600: Datapath

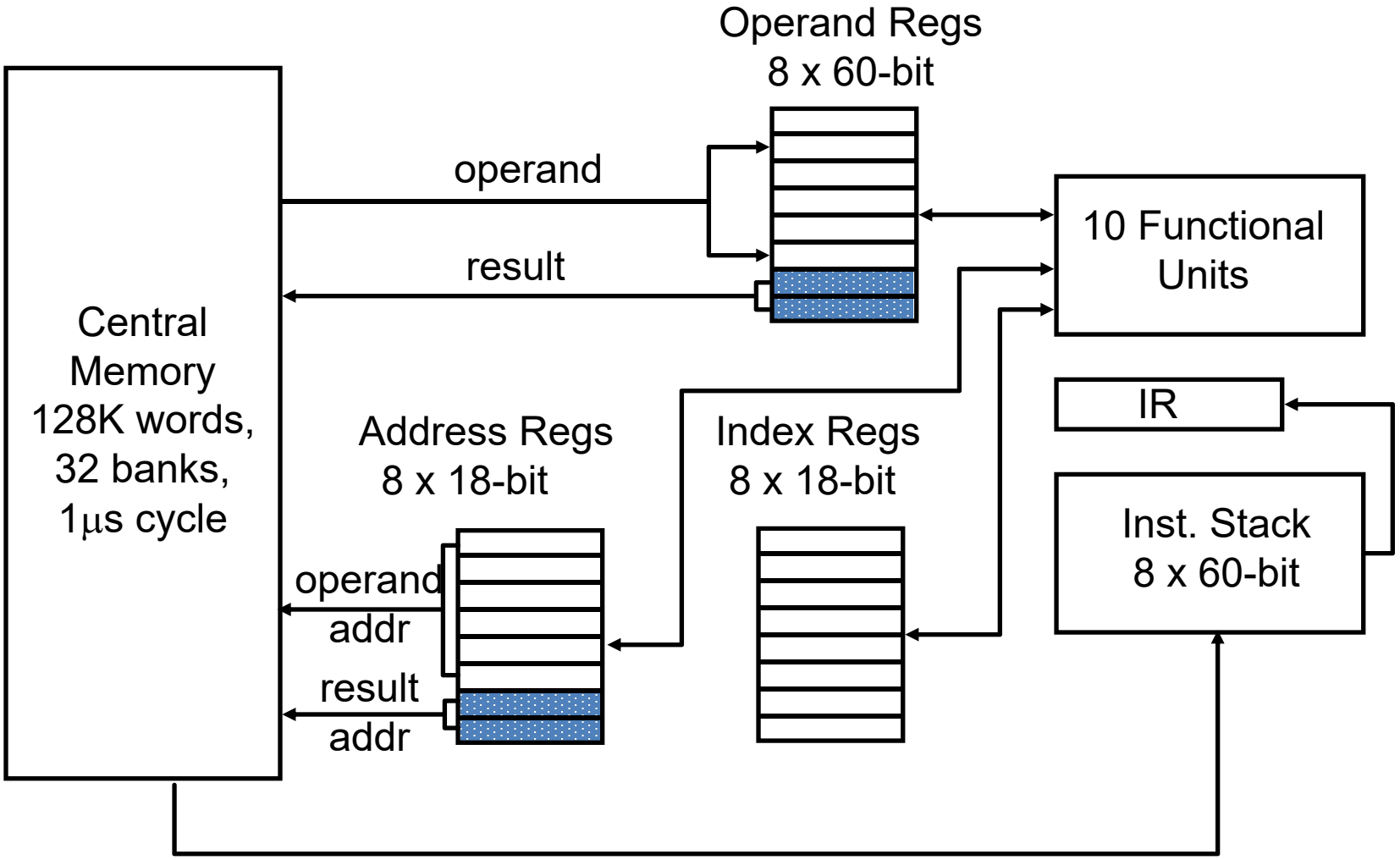

带有记分牌控制的MIPS

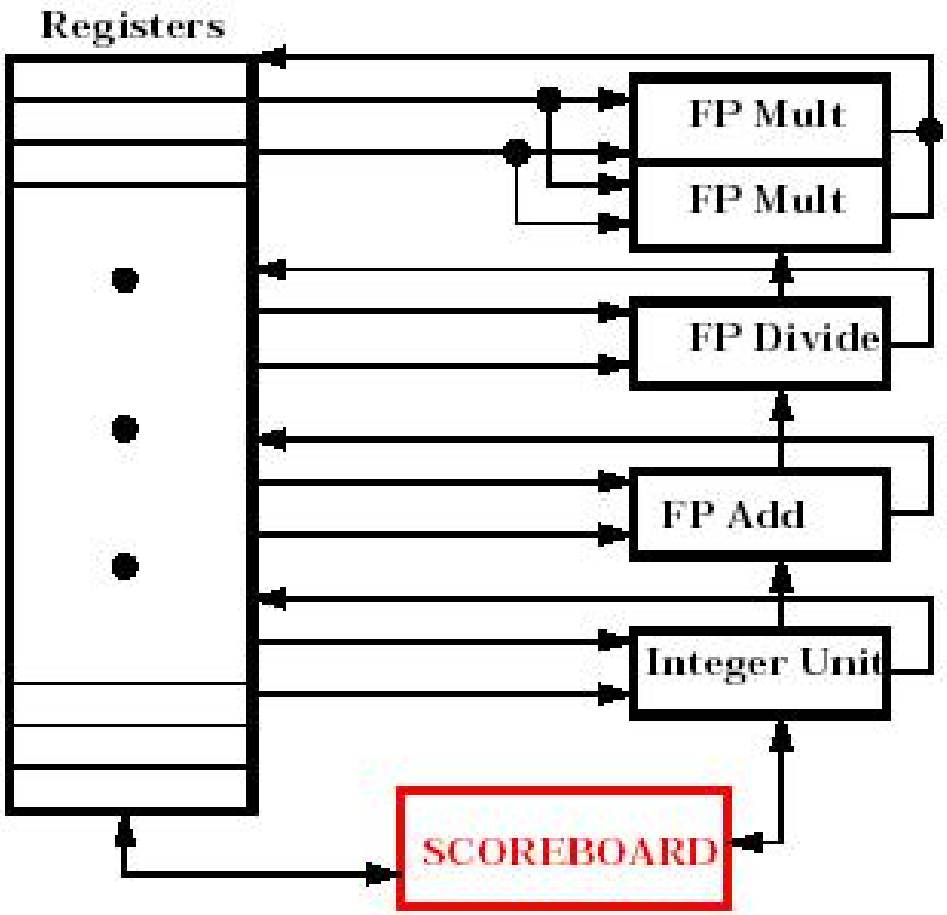

Note: this model could support both single or multi-issue

Exception is that one multiply will be issued per cycle

All depends on bus/trunk structure

记分牌技术要点(2/2)

- **Out-of-order completion => WAR, WAW hazards?**
- **WAR：一般解决方案 （在不采用寄存器重命名的情况下）**
  - 对操作排队
  - 仅在读操作数阶段读寄存器
- **WAW：检测到相关后，停止发射前一条指令，直到前一条指令完成**
- **提高效率的前提：需要有多条指令进入执行阶段=>必须有多个执行部件或执行部件是流水化的**
- **记分牌保存相关操作和状态**
- **指令执行过程：IF, ISSUE, RO, EX, WR**

记分牌控制的四阶段(1/2)

- **1.Issue—指令译码，检测结构相关**
  - **准入条件**：顺序发射，并且没有结构相关，没有WAW相关
  - 如果当前指令所使用的**功能部件空闲**，并且没有其他活动的指令使用相同的目的寄存器（**WAW**), 记分牌发射该指令到功能部件，并更新记分牌内部数据，如果有结构相关或WAW相关，则该指令的发射暂停，并且也不发射后继指令，直到相关解除。

- **2. Read operands—没有数据相关时，读操作数**
  - **准入条件：**没有RAW相关。
  - 如果先前已发射的正在运行的指令不对当前指令的源操作数寄存器进行写操作，或者一个正在工作的功能部件已经完成了对该寄存器的写操作，则该操作数有效。操作数有效时，记分牌控制功能部件读操作数，准备执行。
  - 记分牌在这一步动态地解决了**RAW相关**，指令可能会乱序执行。

记分牌控制的四阶段（2/2）

- **3.Execution—取到操作数后执行 (EX)**
  - **准入条件：** RO后准入
  - 接收到操作数后，功能部件开始执行
  - 当计算出结果后，通知记分牌，可以结束该条指令的执行。
- **4.Write result—finish execution (WR)**
  - **准入条件：** 没有WAR相关
  - 一旦记分牌得到功能部件执行完毕的信息后，记分牌**检测WAR相关**，如果没有WAR相关，就写结果，如果有WAR 相关，则暂停该条指令。
  - Example:

```
DIVD    F0,F2,F4
ADDD    F10,F0,F8
SUBD    F8,F8,F14
```

  - CDC 6600 scoreboard 将暂停 SUBD 直到ADDD 读取操作数后，才进入WR段处理。

记分牌的结构

1.Instruction status—记录正在执行的各条指令的状态步

2.Functional unit status—记录功能部件(FU)的状态。用9个域记录每个功能部件的9个参量：

Busy—指示该部件是否空闲

Op—该部件所完成的操作

Fi—其目的寄存器编号

Fj, Fk—源寄存器编号

Qj, Qk—产生源操作数Fj, Fk的功能部件

Rj, Rk—标识源操作数Fj, Fk是否就绪的标志

3.Register result status—如果存在功能部件对某一寄存器进行写操作，在寄存器结果状态表中记录该功能部件。如果没有指令对该寄存器进行写操作，则该域 为Blank

寄存器索引	F0	F2	F4	F6	.....										
部件编号															

记分牌流水线控制

Instruction status	Wait until	Bookkeeping
Issue	Not busy (FU) and not Result(D)	Busy(FU)← yes; Op(FU)← op; Fi(FU)← `D'; Fj(FU)← `S1'; Fk(FU)← `S2'; Qj← Result('S1'); Qk← Result(`S2'); Rj← not Qj; Rk← not Qk; Result('D')← FU;
Read operands	Rj and Rk	Rj← No; Rk← No
Execution complete	Functional unit done	
Write result	∀f((Fj(f)≠Fi(FU) or Rj(f)=No) & (Fk(f) ≠Fi(FU) or Rk(f)=No))	∀f(if Qj(f)=FU then Rj(f)← Yes); ∀f(if Qk(f)=FU then Rk(f)← Yes); Result(Fi(FU))← 0; Busy(FU)← No

Result(): 寄存器结果状态表，FU：功能部件

5.2-1 指令流动态调度方法：Scoreboard

记分牌
技术要点

示例

Scoreboard Example

基本假设：
1、5个FU
2、Load - 1个Cycle
Multi - 10个Cycle
Add - 2个Cycle
Divide - 40个Cycle

Instruction status

Instruction	j	k	Issue	Read operand	Executi complet	Write Result
LD F6	34+	R2				
LD F2	45+	R3				
MULTD F0	F2	F4				
SUBD F8	F6	F2				
DIVD F10	F0	F6				
ADDD F6	F8	F2				

Functional unit status

Time	Name	Busy	Op	dest Fi	S1 Fj	S2 Fk	FU for Qj	FU for Qk	Fj? Rj	Fk? Rk
	Integer	No								
	Mult1	No								
	Mult2	No								
	Add	No								
	Divide	No								

Register result status

Clock	F0	F2	F4	F6	F8	F10	F12	...	F30
FU									

Scoreboard Example: Cycle 1

Instruction status:

Instruction		*j*	*k*	*Issue*	*Read Oper*	*Exec Comp*	*Write Result*
LD	F6	34+	R2	1			
LD	F2	45+	R3				
MULTD	F0	F2	F4				
SUBD	F8	F6	F2				
DIVD	F10	F0	F6				
ADDD	F6	F8	F2				

Functional unit status:

Time Name	*Busy*	*Op*	*dest Fi*	*S1 Fj*	*S2 Fk*	*FU Qj*	*FU Qk*	*Fj? Rj*	*Fk? Rk*
Integer	Yes	Load	F6		R2				Yes
Mult1	No								
Mult2	No								
Add	No								
Divide	No								

Register result status:

Clock		*F0*	*F2*	*F4*	*F6*	*F8*	*F10*	*F12*	...	*F30*
1	*FU*				Integer					

Scoreboard Example: Cycle 2

Instruction status:

Instruction		*j*	*k*	*Issue*	*Read Oper*	*Exec Comp*	*Write Result*
LD	F6	34+	R2	1	2		
LD	F2	45+	R3				
MULTD	F0	F2	F4				
SUBD	F8	F6	F2				
DIVD	F10	F0	F6				
ADDD	F6	F8	F2				

Functional unit status:

Time	*Name*	*Busy*	*Op*	*dest Fi*	*S1 Fj*	*S2 Fk*	*FU Qj*	*FU Qk*	*Fj? Rj*	*Fk? Rk*
	Integer	Yes	Load	F6		R2				Yes
	Mult1	No								
	Mult2	No								
	Add	No								
	Divide	No								

Register result status:

Clock		*F0*	*F2*	*F4*	*F6*	*F8*	*F10*	*F12*	...	*F30*
2	*FU*				Integer					

- **Issue 2nd LD?**

Scoreboard Example: Cycle 3

Instruction status:

Instruction		*j*	*k*	*Issue*	*Read Oper*	*Exec Comp*	*Write Result*
LD	F6	34+	R2	1	2	3	
LD	F2	45+	R3				
MULTD	F0	F2	F4				
SUBD	F8	F6	F2				
DIVD	F10	F0	F6				
ADDD	F6	F8	F2				

Functional unit status:

Time	*Name*	*Busy*	*Op*	*dest Fi*	*S1 Fj*	*S2 Fk*	*FU Qj*	*FU Qk*	*Fj? Rj*	*Fk? Rk*
	Integer	Yes	Load	F6		R2				No
	Mult1	No								
	Mult2	No								
	Add	No								
	Divide	No								

Register result status:

Clock		*F0*	*F2*	*F4*	*F6*	*F8*	*F10*	*F12*	...	*F30*
3	*FU*				Integer					

- **Issue MULT?**

Scoreboard Example: Cycle 4

Instruction status:

Instruction		*j*	*k*	*Issue*	*Read Oper*	*Exec Comp*	*Write Result*
LD	F6	34+	R2	1	2	3	4
LD	F2	45+	R3				
MULTD	F0	F2	F4				
SUBD	F8	F6	F2				
DIVD	F10	F0	F6				
ADDD	F6	F8	F2				

Functional unit status:

Time Name	*Busy*	*Op*	*dest Fi*	*S1 Fj*	*S2 Fk*	*FU Qj*	*FU Qk*	*Fj? Rj*	*Fk? Rk*
Integer	No								
Mult1	No								
Mult2	No								
Add	No								
Divide	No								

Register result status:

Clock		*F0*	*F2*	*F4*	*F6*	*F8*	*F10*	*F12*	...	*F30*
4	*FU*				Integer					

Scoreboard Example: Cycle 5

Instruction status:

Instruction		*j*	*k*	*Issue*	*Read Oper*	*Exec Comp*	*Write Result*
LD	F6	34+	R2	1	2	3	4
LD	F2	45+	R3	5			
MULTD	F0	F2	F4				
SUBD	F8	F6	F2				
DIVD	F10	F0	F6				
ADDD	F6	F8	F2				

Functional unit status:

Time Name	*Busy*	*Op*	*dest Fi*	*S1 Fj*	*S2 Fk*	*FU Qj*	*FU Qk*	*Fj? Rj*	*Fk? Rk*
Integer	Yes	Load	F2		R3				Yes
Mult1	No								
Mult2	No								
Add	No								
Divide	No								

Register result status:

Clock		*F0*	*F2*	*F4*	*F6*	*F8*	*F10*	*F12*	...	*F30*
5	*FU*		Integer							

Scoreboard Example: Cycle 6

Instruction status:

Instruction		*j*	*k*	*Issue*	*Read Oper*	*Exec Comp*	*Write Result*
LD	F6	34+	R2	1	2	3	4
LD	F2	45+	R3	5	6		
MULTD	F0	F2	F4	6			
SUBD	F8	F6	F2				
DIVD	F10	F0	F6				
ADDD	F6	F8	F2				

Functional unit status:

Time	*Name*	*Busy*	*Op*	*dest Fi*	*S1 Fj*	*S2 Fk*	*FU Qj*	*FU Qk*	*Fj? Rj*	*Fk? Rk*
	Integer	~~Yes~~	~~Load~~	~~F2~~		~~R3~~				~~Yes~~
	Mult1	Yes	Mult	F0	F2	F4	Integer		No	Yes
	Mult2	No								
	Add	No								
	Divide	No								

Register result status:

Clock		*F0*	*F2*	*F4*	*F6*	*F8*	*F10*	*F12*	*...*	*F30*
6	*FU*	Mult1	Integer							

Scoreboard Example: Cycle 7

Instruction status:

Instruction		*j*	*k*	*Issue*	*Read Oper*	*Exec Comp*	*Write Result*
LD	F6	34+	R2	1	2	3	4
LD	F2	45+	R3	5	6	7	
MULTD	F0	F2	F4	6			
SUBD	F8	F6	F2	7			
DIVD	F10	F0	F6				
ADDD	F6	F8	F2				

Functional unit status:

Time	*Name*	*Busy*	*Op*	*dest Fi*	*S1 Fj*	*S2 Fk*	*FU Qj*	*FU Qk*	*Fj? Rj*	*Fk? Rk*
	Integer	Yes	Load	F2		R3				No
	Mult1	Yes	Mult	F0	F2	F4	Integer		No	Yes
	Mult2	No								
	Add	Yes	Sub	F8	F6	F2		Integer	Yes	No
	Divide	No								

Register result status:

Clock		*F0*	*F2*	*F4*	*F6*	*F8*	*F10*	*F12*	...	*F30*
7	*FU*	Mult1	Integer			Add				

- **Read multiply operands?**

Scoreboard Example: Cycle 8a (First half of clock cycle)

Instruction status:

Instruction		*j*	*k*	*Issue*	*Read Oper*	*Exec Comp*	*Write Result*
LD	F6	34+	R2	1	2	3	4
LD	F2	45+	R3	5	6	7	
MULTD	F0	F2	F4	6			
SUBD	F8	F6	F2	7			
DIVD	F10	F0	F6	8			
ADDD	F6	F8	F2				

Functional unit status:

Time	*Name*	*Busy*	*Op*	*dest Fi*	*S1 Fj*	*S2 Fk*	*FU Qj*	*FU Qk*	*Fj? Rj*	*Fk? Rk*
	Integer	Yes	Load	F2		R3				No
	Mult1	Yes	Mult	F0	F2	F4	Integer		No	Yes
	Mult2	No								
	Add	Yes	Sub	F8	F6	F2		Integer	Yes	No
	Divide	Yes	Div	F10	F0	F6	Mult1		No	Yes

Register result status:

Clock		*F0*	*F2*	*F4*	*F6*	*F8*	*F10*	*F12*	...	*F30*
8	*FU*	Mult1	Integer			Add	Divide			

Issue DIVD

Scoreboard Example: Cycle 8b (Second half of clock cycle)

Instruction status:

Instruction		*j*	*k*	*Issue*	*Read Oper*	*Exec Comp*	*Write Result*
LD	F6	34+	R2	1	2	3	4
LD	F2	45+	R3	5	6	7	8
MULTD	F0	F2	F4	6			
SUBD	F8	F6	F2	7			
DIVD	F10	F0	F6	8			
ADDD	F6	F8	F2				

Functional unit status:

Time	*Name*	*Busy*	*Op*	*dest Fi*	*S1 Fj*	*S2 Fk*	*FU Qj*	*FU Qk*	*Fj? Rj*	*Fk? Rk*
	Integer	No								
	Mult1	Yes	Mult	F0	F2	F4			Yes	Yes
	Mult2	No								
	Add	Yes	Sub	F8	F6	F2			Yes	Yes
	Divide	Yes	Div	F10	F0	F6	Mult1		No	Yes

Register result status:

Clock		*F0*	*F2*	*F4*	*F6*	*F8*	*F10*	*F12*	...	*F30*
8	*FU*	Mult1				Add	Divide			

2nd LD 写结果，并通知相关指令结果可用，释放IU部件

Scoreboard Example: Cycle 9

Instruction status:

Instruction		*j*	*k*	*Issue*	*Read Oper*	*Exec Comp*	*Write Result*
LD	F6	34+	R2	1	2	3	4
LD	F2	45+	R3	5	6	7	8
MULTD	F0	F2	F4	6	9		
SUBD	F8	F6	F2	7	9		
DIVD	F10	F0	F6	8			
ADDD	F6	F8	F2				

Functional unit status:

Note Remaining

Time	*Name*	*Busy*	*Op*	*dest Fi*	*S1 Fj*	*S2 Fk*	*FU Qj*	*FU Qk*	*Fj? Rj*	*Fk? Rk*
	Integer	No								
10	Mult1	Yes	Mult	F0	F2	F4			Yes	Yes
	Mult2	No								
2	Add	Yes	Sub	F8	F6	F2			Yes	Yes
	Divide	Yes	Div	F10	F0	F6	Mult1		No	Yes

Register result status:

Clock		*F0*	*F2*	*F4*	*F6*	*F8*	*F10*	*F12*	*...*	*F30*
9	*FU*	Mult1				Add	Divide			

- **Read operands for MULT & SUB? Issue ADDD?**

Scoreboard Example: Cycle 10

Instruction status:

Instruction		*j*	*k*	*Issue*	*Read Oper*	*Exec Comp*	*Write Result*
LD	F6	34+	R2	1	2	3	4
LD	F2	45+	R3	5	6	7	8
MULTD	F0	F2	F4	6	9		
SUBD	F8	F6	F2	7	9		
DIVD	F10	F0	F6	8			
ADDD	F6	F8	F2				

Functional unit status:

Time	*Name*	*Busy*	*Op*	*dest Fi*	*S1 Fj*	*S2 Fk*	*FU Qj*	*FU Qk*	*Fj? Rj*	*Fk? Rk*
	Integer	No								
9	Mult1	Yes	Mult	F0	F2	F4			No	No
	Mult2	No								
1	Add	Yes	Sub	F8	F6	F2			No	No
	Divide	Yes	Div	F10	F0	F6	Mult1		No	Yes

Register result status:

Clock		*F0*	*F2*	*F4*	*F6*	*F8*	*F10*	*F12*	*...*	*F30*
10	*FU*	Mult1				Add	Divide			

Scoreboard Example: Cycle 11

Instruction status:

Instruction		*j*	*k*	*Issue*	*Read Oper*	*Exec Comp*	*Write Result*
LD	F6	34+	R2	1	2	3	4
LD	F2	45+	R3	5	6	7	8
MULTD	F0	F2	F4	6	9		
SUBD	F8	F6	F2	7	9	11	
DIVD	F10	F0	F6	8			
ADDD	F6	F8	F2				

Functional unit status:

Time	*Name*	*Busy*	*Op*	*dest Fi*	*S1 Fj*	*S2 Fk*	*FU Qj*	*FU Qk*	*Fj? Rj*	*Fk? Rk*
	Integer	No								
8	Mult1	Yes	Mult	F0	F2	F4			No	No
	Mult2	No								
0	Add	Yes	Sub	F8	F6	F2			No	No
	Divide	Yes	Div	F10	F0	F6	Mult1		No	Yes

Register result status:

Clock		*F0*	*F2*	*F4*	*F6*	*F8*	*F10*	*F12*	*...*	*F30*
11	*FU*	Mult1				Add	Divide			

Scoreboard Example: Cycle 12

Instruction status:

Instruction		*j*	*k*	*Issue*	*Read Oper*	*Exec Comp*	*Write Result*
LD	F6	34+	R2	1	2	3	4
LD	F2	45+	R3	5	6	7	8
MULTD	F0	F2	F4	6	9		
SUBD	F8	F6	F2	7	9	11	12
DIVD	F10	F0	F6	8			
ADDD	F6	F8	F2				

Functional unit status:

Time	*Name*	*Busy*	*Op*	*dest Fi*	*S1 Fj*	*S2 Fk*	*FU Qj*	*FU Qk*	*Fj? Rj*	*Fk? Rk*
	Integer	No								
7	Mult1	Yes	Mult	F0	F2	F4			No	No
	Mult2	No								
	Add	No								
	Divide	Yes	Div	F10	F0	F6	Mult1		No	Yes

Register result status:

Clock		*F0*	*F2*	*F4*	*F6*	*F8*	*F10*	*F12*	...	*F30*
12	*FU*	Mult1					Divide			

- **Read operands for DIVD?**

Scoreboard Example: Cycle 13

Instruction status:

Instruction		*j*	*k*	*Issue*	*Read Oper*	*Exec Comp*	*Write Result*
LD	F6	34+	R2	1	2	3	4
LD	F2	45+	R3	5	6	7	8
MULTD	F0	F2	F4	6	9		
SUBD	F8	F6	F2	7	9	11	12
DIVD	F10	F0	F6	8			
ADDD	F6	F8	F2	13			

Functional unit status:

Time	*Name*	*Busy*	*Op*	*dest Fi*	*S1 Fj*	*S2 Fk*	*FU Qj*	*FU Qk*	*Fj? Rj*	*Fk? Rk*
	Integer	No								
6	Mult1	Yes	Mult	F0	F2	F4			No	No
	Mult2	No								
	Add	Yes	Add	F6	F8	F2			Yes	Yes
	Divide	Yes	Div	F10	F0	F6	Mult1		No	Yes

Register result status:

Clock		*F0*	*F2*	*F4*	*F6*	*F8*	*F10*	*F12*	*...*	*F30*
13	*FU*	Mult1			Add		Divide			

Scoreboard Example: Cycle 14

Instruction status:

Instruction		*j*	*k*	*Issue*	*Read Oper*	*Exec Comp*	*Write Result*
LD	F6	34+	R2	1	2	3	4
LD	F2	45+	R3	5	6	7	8
MULTD	F0	F2	F4	6	9		
SUBD	F8	F6	F2	7	9	11	12
DIVD	F10	F0	F6	8			
ADDD	F6	F8	F2	13	14		

Functional unit status:

Time	*Name*	*Busy*	*Op*	*dest Fi*	*S1 Fj*	*S2 Fk*	*FU Qj*	*FU Qk*	*Fj? Rj*	*Fk? Rk*
	Integer	No								
5	Mult1	Yes	Mult	F0	F2	F4			No	No
	Mult2	No								
2	Add	Yes	Add	F6	F8	F2			Yes	Yes
	Divide	Yes	Div	F10	F0	F6	Mult1		No	Yes

Register result status:

Clock		*F0*	*F2*	*F4*	*F6*	*F8*	*F10*	*F12*	...	*F30*
14	*FU*	Mult1			Add		Divide			

Scoreboard Example: Cycle 15

Instruction status:

Instruction		*j*	*k*	*Issue*	*Read Oper*	*Exec Comp*	*Write Result*
LD	F6	34+	R2	1	2	3	4
LD	F2	45+	R3	5	6	7	8
MULTD	F0	F2	F4	6	9		
SUBD	F8	F6	F2	7	9	11	12
DIVD	F10	F0	F6	8			
ADDD	F6	F8	F2	13	14		

Functional unit status:

Time	*Name*	*Busy*	*Op*	*dest Fi*	*S1 Fj*	*S2 Fk*	*FU Qj*	*FU Qk*	*Fj? Rj*	*Fk? Rk*
	Integer	No								
4	Mult1	Yes	Mult	F0	F2	F4			No	No
	Mult2	No								
1	Add	Yes	Add	F6	F8	F2			No	No
	Divide	Yes	Div	F10	F0	F6	Mult1		No	Yes

Register result status:

Clock		*F0*	*F2*	*F4*	*F6*	*F8*	*F10*	*F12*	*...*	*F30*
15	*FU*	Mult1			Add		Divide			

Scoreboard Example: Cycle 16

Instruction status:

Instruction		*j*	*k*	*Issue*	*Read Oper*	*Exec Comp*	*Write Result*
LD	F6	34+	R2	1	2	3	4
LD	F2	45+	R3	5	6	7	8
MULTD	F0	F2	F4	6	9		
SUBD	F8	F6	F2	7	9	11	12
DIVD	F10	F0	F6	8			
ADDD	F6	F8	F2	13	14	16	

Functional unit status:

Time	*Name*	*Busy*	*Op*	*dest Fi*	*S1 Fj*	*S2 Fk*	*FU Qj*	*FU Qk*	*Fj? Rj*	*Fk? Rk*
	Integer	No								
3	Mult1	Yes	Mult	F0	F2	F4			No	No
	Mult2	No								
0	Add	Yes	Add	F6	F8	F2			No	No
	Divide	Yes	Div	F10	F0	F6	Mult1		No	Yes

Register result status:

Clock		*F0*	*F2*	*F4*	*F6*	*F8*	*F10*	*F12*	*...*	*F30*
16	*FU*	Mult1			Add		Divide			

Scoreboard Example: Cycle 17

Instruction status:

Instruction		*j*	*k*	*Issue*	*Read Oper*	*Exec Comp*	*Write Result*
LD	F6	34+	R2	1	2	3	4
LD	F2	45+	R3	5	6	7	8
MULTD	F0	F2	F4	6	9		
SUBD	F8	F6	F2	7	9	11	12
DIVD	F10	F0	F6	8			
ADDD	F6	F8	F2	13	14	16	

WAR Hazard!

Functional unit status:

Time	*Name*	*Busy*	*Op*	*dest Fi*	*S1 Fj*	*S2 Fk*	*FU Qj*	*FU Qk*	*Fj? Rj*	*Fk? Rk*
	Integer	No								
2	Mult1	Yes	Mult	F0	F2	F4			No	No
	Mult2	No								
	Add	Yes	Add	F6	F8	F2			No	No
	Divide	Yes	Div	F10	F0	F6	Mult1		No	Yes

Register result status:

Clock		*F0*	*F2*	*F4*	*F6*	*F8*	*F10*	*F12*	*...*	*F30*
17	*FU*	Mult1			Add		Divide			

- **Why not write result of ADD???**

Scoreboard Example: Cycle 18

Instruction status:

Instruction		*j*	*k*	*Issue*	*Read Oper*	*Exec Comp*	*Write Result*
LD	F6	34+	R2	1	2	3	4
LD	F2	45+	R3	5	6	7	8
MULTD	F0	F2	F4	6	9		
SUBD	F8	F6	F2	7	9	11	12
DIVD	F10	F0	F6	8			
ADDD	F6	F8	F2	13	14	16	

Functional unit status:

Time	*Name*	*Busy*	*Op*	*dest Fi*	*S1 Fj*	*S2 Fk*	*FU Qj*	*FU Qk*	*Fj? Rj*	*Fk? Rk*
	Integer	No								
1	Mult1	Yes	Mult	F0	F2	F4			No	No
	Mult2	No								
	Add	Yes	Add	F6	F8	F2			No	No
	Divide	Yes	Div	F10	F0	F6	Mult1		No	Yes

Register result status:

Clock		*F0*	*F2*	*F4*	*F6*	*F8*	*F10*	*F12*	*...*	*F30*
18	*FU*	Mult1			Add		Divide			

Scoreboard Example: Cycle 19

Instruction status:

Instruction		*j*	*k*	*Issue*	*Read Oper*	*Exec Comp*	*Write Result*
LD	F6	34+	R2	1	2	3	4
LD	F2	45+	R3	5	6	7	8
MULTD	F0	F2	F4	6	9	19	
SUBD	F8	F6	F2	7	9	11	12
DIVD	F10	F0	F6	8			
ADDD	F6	F8	F2	13	14	16	

Functional unit status:

Time	*Name*	*Busy*	*Op*	*dest Fi*	*S1 Fj*	*S2 Fk*	*FU Qj*	*FU Qk*	*Fj? Rj*	*Fk? Rk*
	Integer	No								
0	Mult1	Yes	Mult	F0	F2	F4			No	No
	Mult2	No								
	Add	Yes	Add	F6	F8	F2			No	No
	Divide	Yes	Div	F10	F0	F6	Mult1		No	Yes

Register result status:

Clock		*F0*	*F2*	*F4*	*F6*	*F8*	*F10*	*F12*	*...*	*F30*
19	*FU*	Mult1			Add		Divide			

Scoreboard Example: Cycle 20

Instruction status:

Instruction		*j*	*k*	*Issue*	*Read Oper*	*Exec Comp*	*Write Result*
LD	F6	34+	R2	1	2	3	4
LD	F2	45+	R3	5	6	7	8
MULTD	F0	F2	F4	6	9	19	20
SUBD	F8	F6	F2	7	9	11	12
DIVD	F10	F0	F6	8			
ADDD	F6	F8	F2	13	14	16	

Functional unit status:

Time Name	*Busy*	*Op*	*dest Fi*	*S1 Fj*	*S2 Fk*	*FU Qj*	*FU Qk*	*Fj? Rj*	*Fk? Rk*
Integer	No								
Mult1	No								
Mult2	No								
Add	Yes	Add	F6	F8	F2			No	No
Divide	Yes	Div	F10	F0	F6			Yes	Yes

Register result status:

Clock		*F0*	*F2*	*F4*	*F6*	*F8*	*F10*	*F12*	*...*	*F30*
20	*FU*				Add		Divide			

Scoreboard Example: Cycle 21

Instruction status:

Instruction		*j*	*k*	*Issue*	*Read Oper*	*Exec Comp*	*Write Result*
LD	F6	34+	R2	1	2	3	4
LD	F2	45+	R3	5	6	7	8
MULTD	F0	F2	F4	6	9	19	20
SUBD	F8	F6	F2	7	9	11	12
DIVD	F10	F0	F6	8	21		
ADDD	F6	F8	F2	13	14	16	

Functional unit status:

Time Name	*Busy*	*Op*	*dest Fi*	*S1 Fj*	*S2 Fk*	*FU Qj*	*FU Qk*	*Fj? Rj*	*Fk? Rk*
Integer	No								
Mult1	No								
Mult2	No								
Add	Yes	Add	F6	F8	F2			No	No
Divide	Yes	Div	F10	F0	F6			Yes	Yes

Register result status:

Clock		*F0*	*F2*	*F4*	*F6*	*F8*	*F10*	*F12*	*...*	*F30*
21	*FU*				Add		Divide			

- **WAR Hazard is now gone...**

Scoreboard Example: Cycle 22

Instruction status:

Instruction		*j*	*k*	*Issue*	*Read Oper*	*Exec Comp*	*Write Result*
LD	F6	34+	R2	1	2	3	4
LD	F2	45+	R3	5	6	7	8
MULTD	F0	F2	F4	6	9	19	20
SUBD	F8	F6	F2	7	9	11	12
DIVD	F10	F0	F6	8	21		
ADDD	F6	F8	F2	13	14	16	22

Functional unit status:

Time	*Name*	*Busy*	*Op*	*dest Fi*	*S1 Fj*	*S2 Fk*	*FU Qj*	*FU Qk*	*Fj? Rj*	*Fk? Rk*
	Integer	No								
	Mult1	No								
	Mult2	No								
	Add	No								
39	Divide	Yes	Div	F10	F0	F6			No	No

Register result status:

Clock		*F0*	*F2*	*F4*	*F6*	*F8*	*F10*	*F12*	...	*F30*
22	*FU*						Divide			

Continue…….

Scoreboard Example: Cycle 61

Instruction status:

Instruction		*j*	*k*	*Issue*	*Read Oper*	*Exec Comp*	*Write Result*
LD	F6	34+	R2	1	2	3	4
LD	F2	45+	R3	5	6	7	8
MULTD	F0	F2	F4	6	9	19	20
SUBD	F8	F6	F2	7	9	11	12
DIVD	F10	F0	F6	8	21	61	
ADDD	F6	F8	F2	13	14	16	22

Functional unit status:

Time	*Name*	*Busy*	*Op*	*dest Fi*	*S1 Fj*	*S2 Fk*	*FU Qj*	*FU Qk*	*Fj? Rj*	*Fk? Rk*
	Integer	No								
	Mult1	No								
	Mult2	No								
	Add	No								
0	Divide	Yes	Div	F10	F0	F6			No	No

Register result status:

Clock		*F0*	*F2*	*F4*	*F6*	*F8*	*F10*	*F12*	...	*F30*
61	*FU*						Divide			

Scoreboard Example: Cycle 62

Instruction status:

Instruction		*j*	*k*	*Issue*	*Read Oper*	*Exec Comp*	*Write Result*
LD	F6	34+	R2	1	2	3	4
LD	F2	45+	R3	5	6	7	8
MULTD	F0	F2	F4	6	9	19	20
SUBD	F8	F6	F2	7	9	11	12
DIVD	F10	F0	F6	8	21	61	62
ADDD	F6	F8	F2	13	14	16	22

Functional unit status:

Time	*Name*	*Busy*	*Op*	*dest Fi*	*S1 Fj*	*S2 Fk*	*FU Qj*	*FU Qk*	*Fj? Rj*	*Fk? Rk*
	Integer	No								
	Mult1	No								
	Mult2	No								
	Add	No								
	Divide	No								

Register result status:

Clock		*F0*	*F2*	*F4*	*F6*	*F8*	*F10*	*F12*	...	*F30*
62	*FU*									

Review: Scoreboard Example: Cycle 62

Instruction status:

Instruction		*j*	*k*	*Issue*	*Read Oper*	*Exec Comp*	*Write Result*
LD	F6	34+	R2	1	2	3	4
LD	F2	45+	R3	5	6	7	8
MULTD	F0	F2	F4	6	9	19	20
SUBD	F8	F6	F2	7	9	11	12
DIVD	F10	F0	F6	8	21	61	62
ADDD	F6	F8	F2	13	14	16	22

Functional unit status:

Time	*Name*	*Busy*	*Op*	*dest Fi*	*S1 Fj*	*S2 Fk*	*FU Qj*	*FU Qk*	*Fj? Rj*	*Fk? Rk*
	Integer	No								
	Mult1	No								
	Mult2	No								
	Add	No								
	Divide	No								

Register result status:

Clock		*F0*	*F2*	*F4*	*F6*	*F8*	*F10*	*F12*	...	*F30*
62	*FU*									

- **顺序issue; 乱序 execute & 乱序 commit**
- **问题：Branch指令怎么办?**

为什么顺序发射?

- **顺序发射使我们可以进行程序的数据流分析**
  - 我们可以知道某条指令的结果会流向哪些指令
  - 如果我们乱序发射，可能会混淆RAW和WAR相关
- **每一周期发射多条指令也使用该原则将会正确地工作**
  - 寄存器文件至少需要有2x 个读端口和x个写端口.

  当有寄存器重命名时，例如：Tomasulo 还需要
  - 多端口的 “rename table” ,以同时对一组指令所用的寄存器重命名
  - 在单周期内发射到多个RS中

Summary

- **硬件方法挖掘ILP**
  - 编译阶段无法确定的相关性，在程序执行时，用硬件方法判定
  - 可以使得程序代码在其他机器上有效地执行
- **记分牌的主要思想：允许stall后的指令继续**
  - 乱序执行(out-of-order execution) => 乱序完成(out-of-order completion)
  - 发射前检测结构相关和WAW相关
  - 读操作数前检测RAW相关
  - 写结果前处理WAR相关

CDC 6600 Scoreboard

CDC 6600 scoreboard的主要缺陷:

- **没有定向数据通路**
- **指令窗口较小，仅局限于基本块内的调度**
  - **基本块按序执行**
- **功能部件数较少**
- **结构冲突时不能发射**
- **WAR相关是通过等待解决的**
- **WAW相关时，不会进入Issue阶段**

Acknowledgements

- **These slides contain material developed and copyright by:**
  - John Kubiatowicz (UCB)
  - Krste Asanovic (UCB)
  - John Hennessy (Standford)and David Patterson (UCB)
  - Chenxi Zhang (Tongji)
  - Muhamed Mudawar (KFUPM)
- **UCB material derived from course CS152、CS252、CS61C**
- **KFUPM material derived from course COE501、COE502**