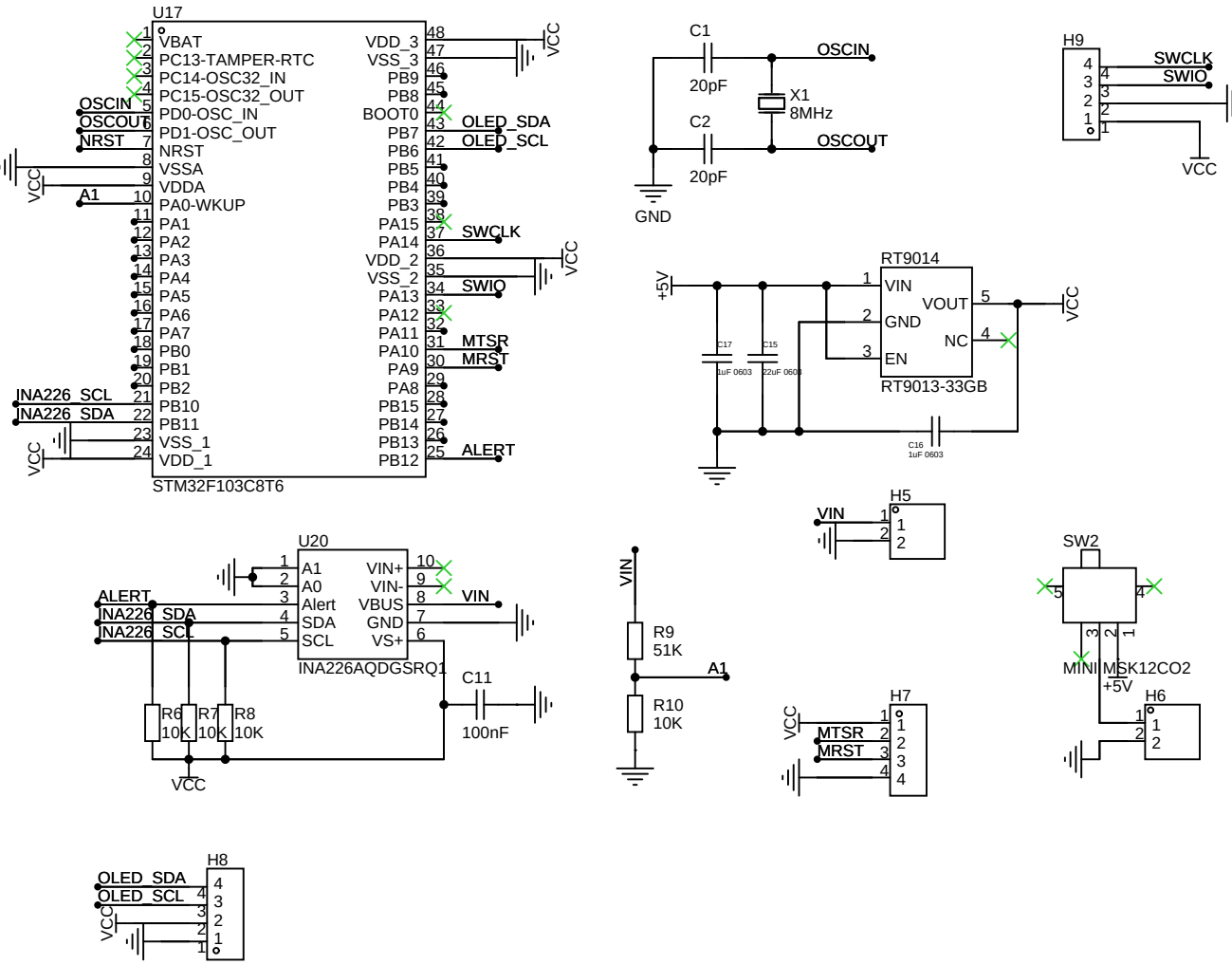

TITLE: 电压表		REV: 1.0
立创EDA	Company: Your Company	Sheet: 1/1
	Date: 2020-06-19 Drawn By: zhangzhi297	