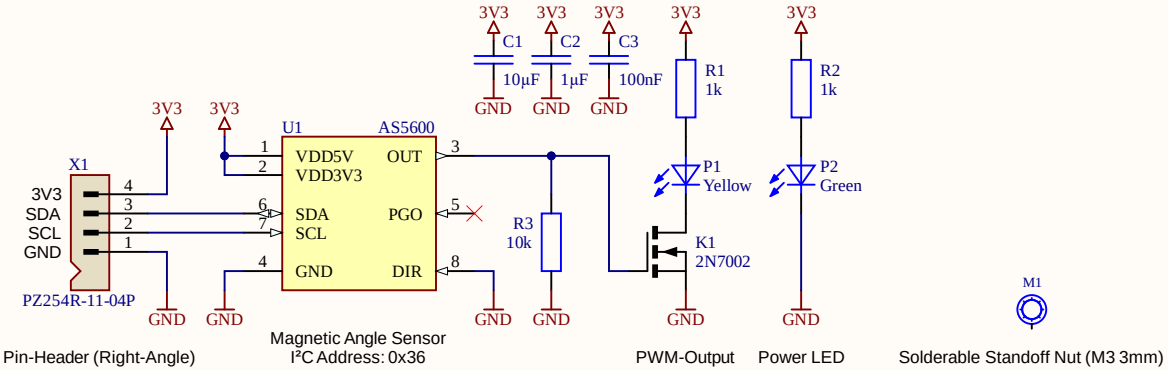

Title	**Angle-Sensor**		
Subtitle	**Vertically Mounted Daughter-Board**		
Author: *Florian Baumgartner & Alain Keller*		Date: 02.12.2023	Rev: V1.0
File: Angle-Sensor_V1.0.SchDoc			Sheet 1 of 1