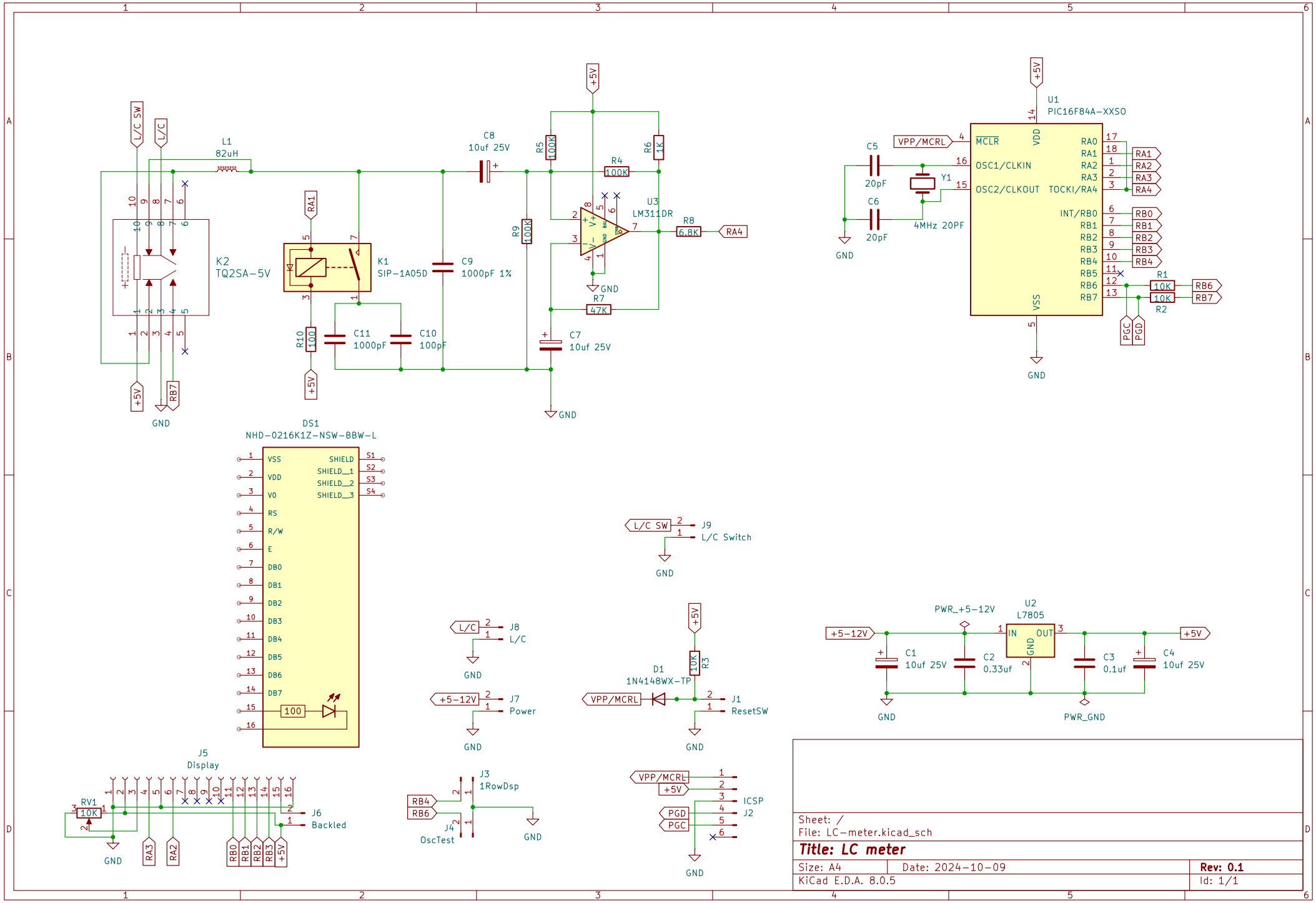

Sheet: /
File: LC-meter.kicad_sch

Title: LC meter

Size: A4	Date: 2024-10-09	Rev: 0.1
KiCad E.D.A. 8.0.5		Id: 1/1