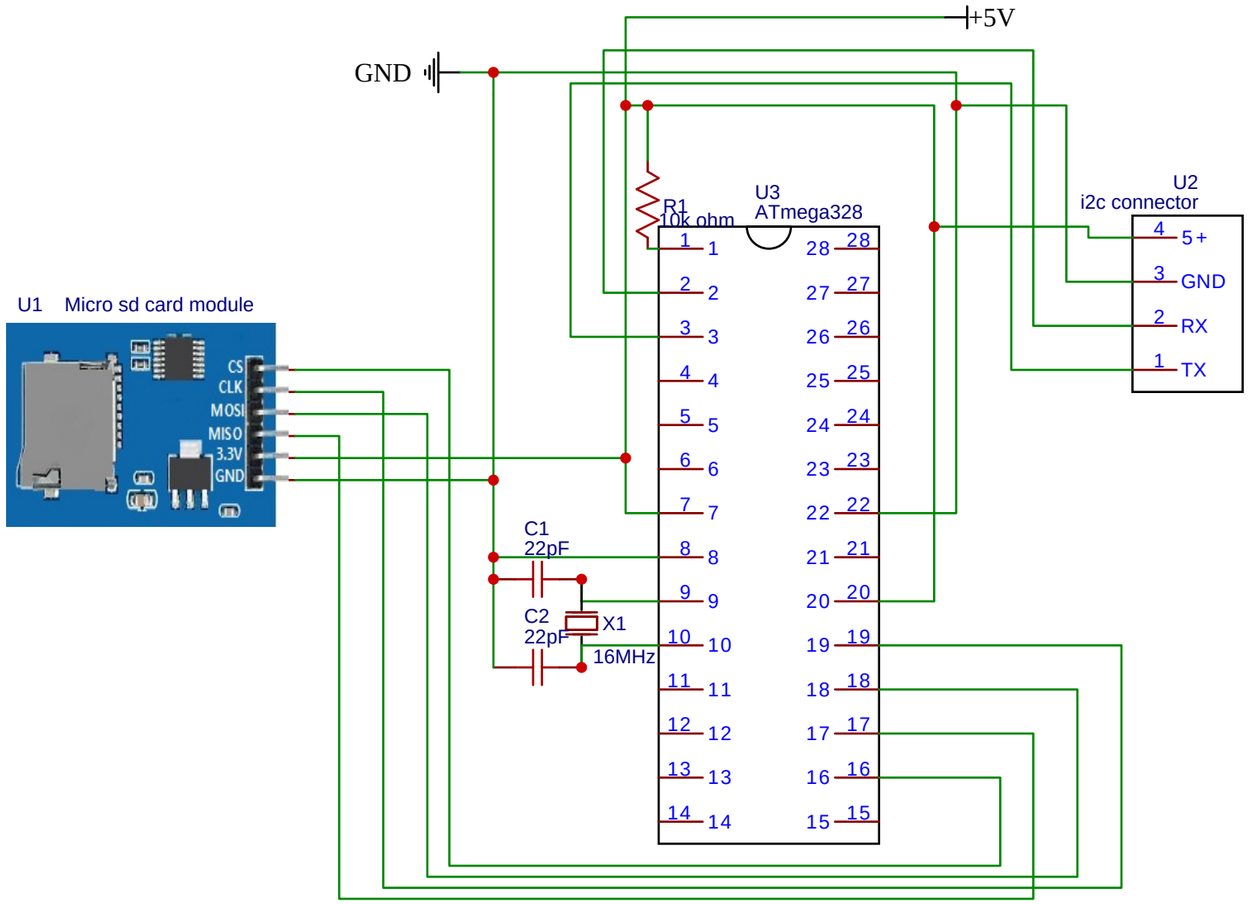

TITLE: BlackBox		REV: 1.0
EasyEDA	Company: Your Company	Sheet: 1/1
	Date: 2025-07-12 Drawn By: pan-da-boi	