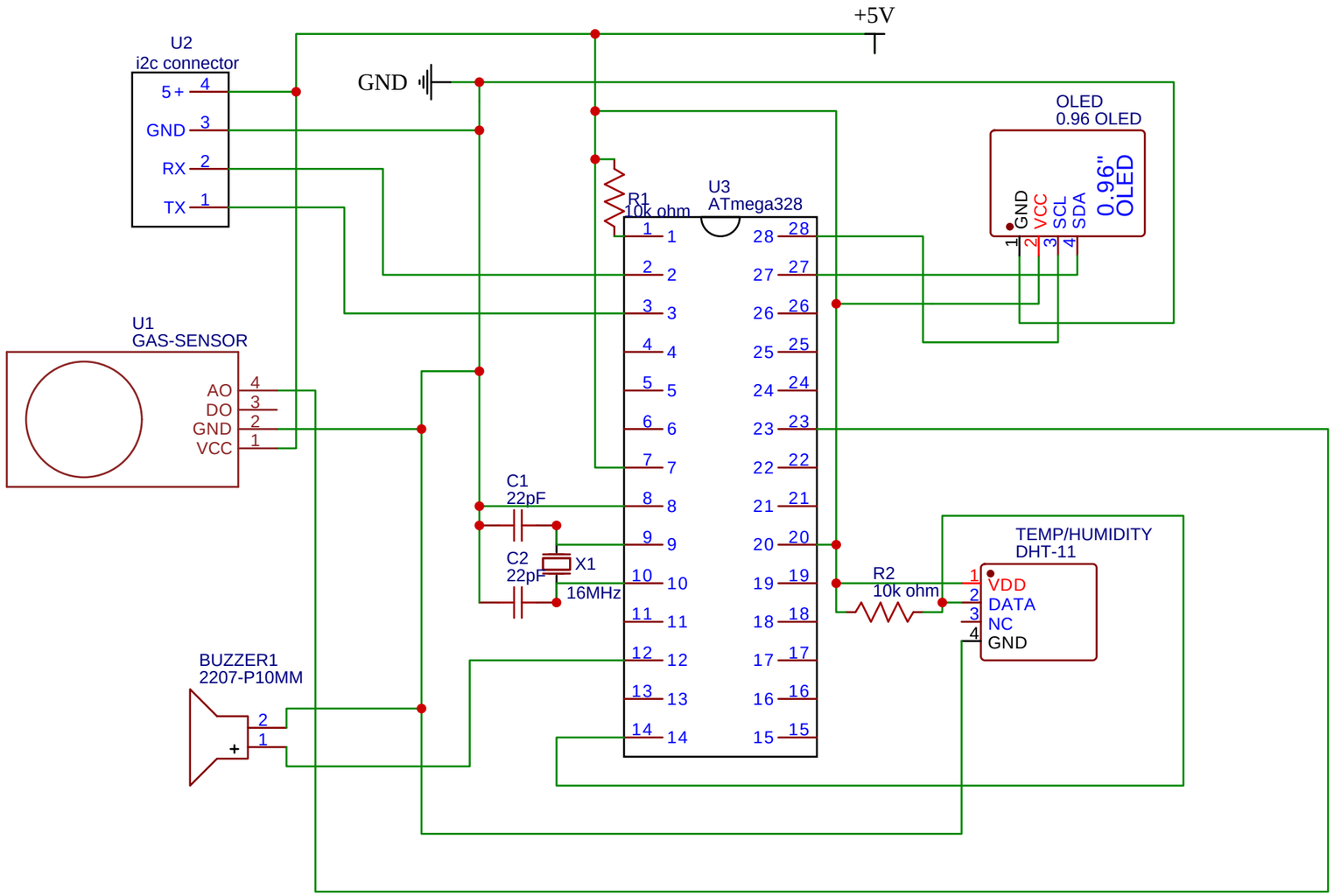

TITLE: HUD-info		REV: 1.0
EasyEDA	Company: Your Company	Sheet: 1/1
	Date: 2025-08-21 Drawn By: pan-da-boi	