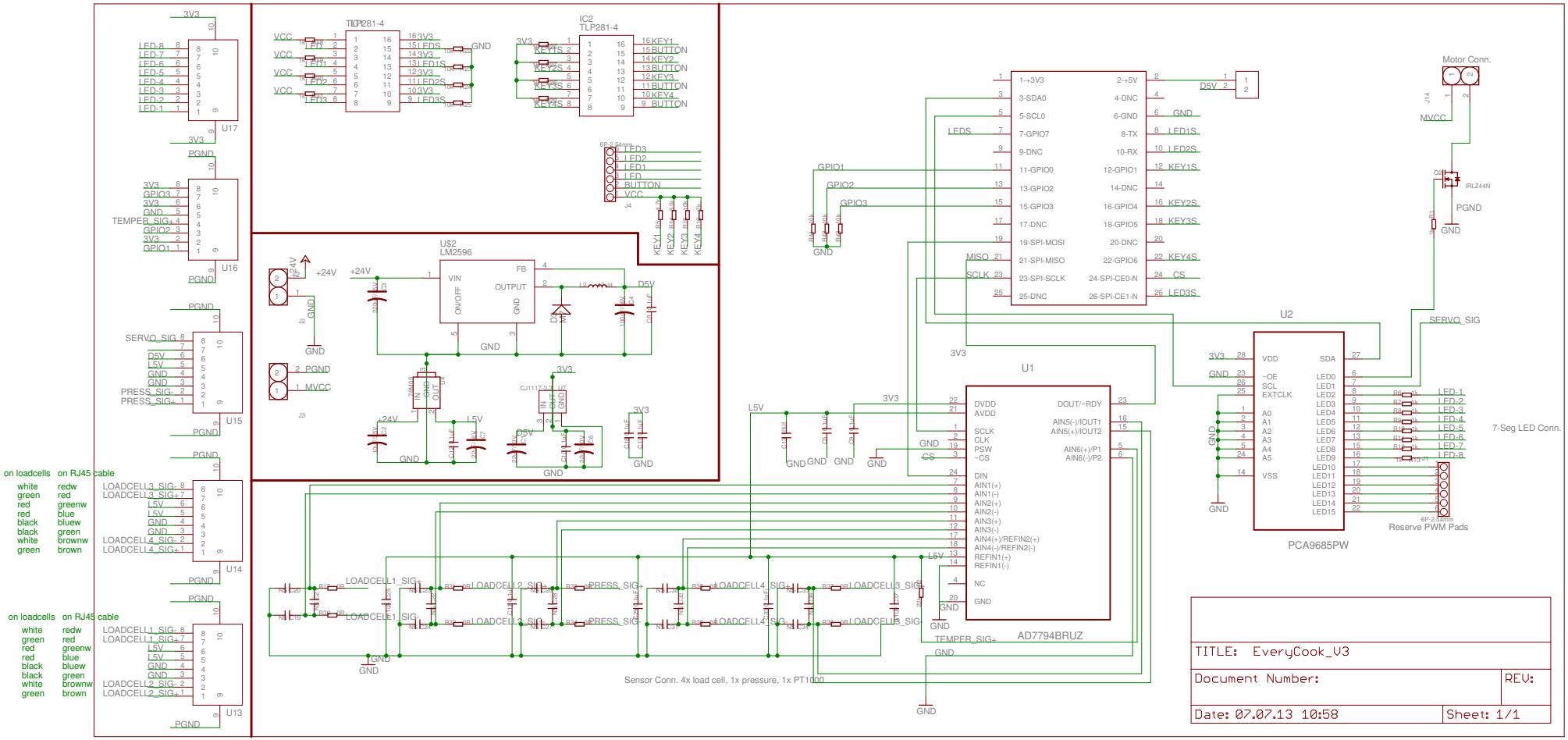

SIG1--------MIN SIG5--------MID SIG3--------MAX

SIG4--------HOTPOT SIG6--------HEAT SIG2--------POWER

KEY1--------FUNSION KEY2------ - KEY3------ + KE43------ ON/OFF