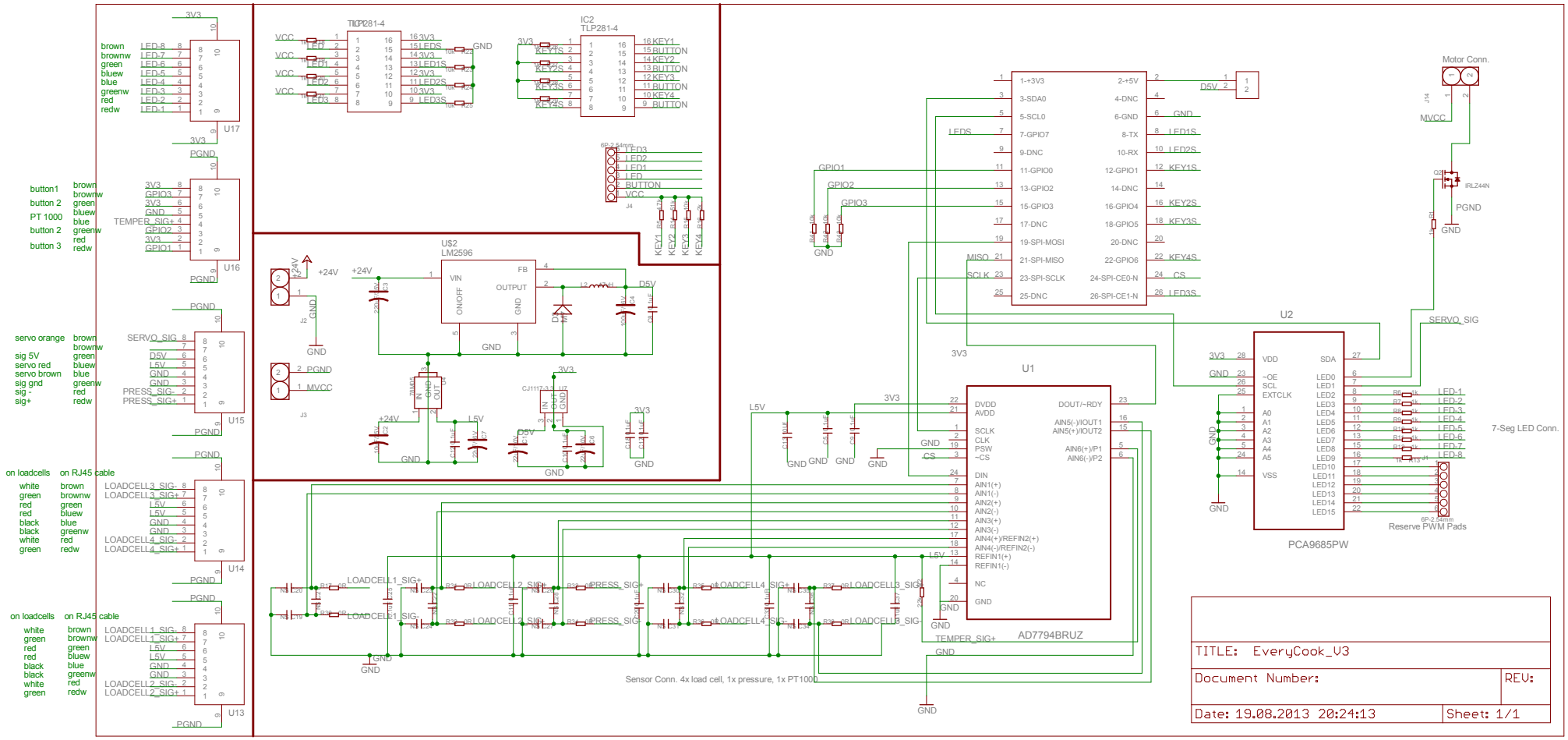

19.08.2013 20:27:00 f=0.60 D:\Dropbox\EveryCook\RaspberryPi Hardware\Shield_V2_as_Shipped\EveryCook_V3.sch (Sheet: 1/1)