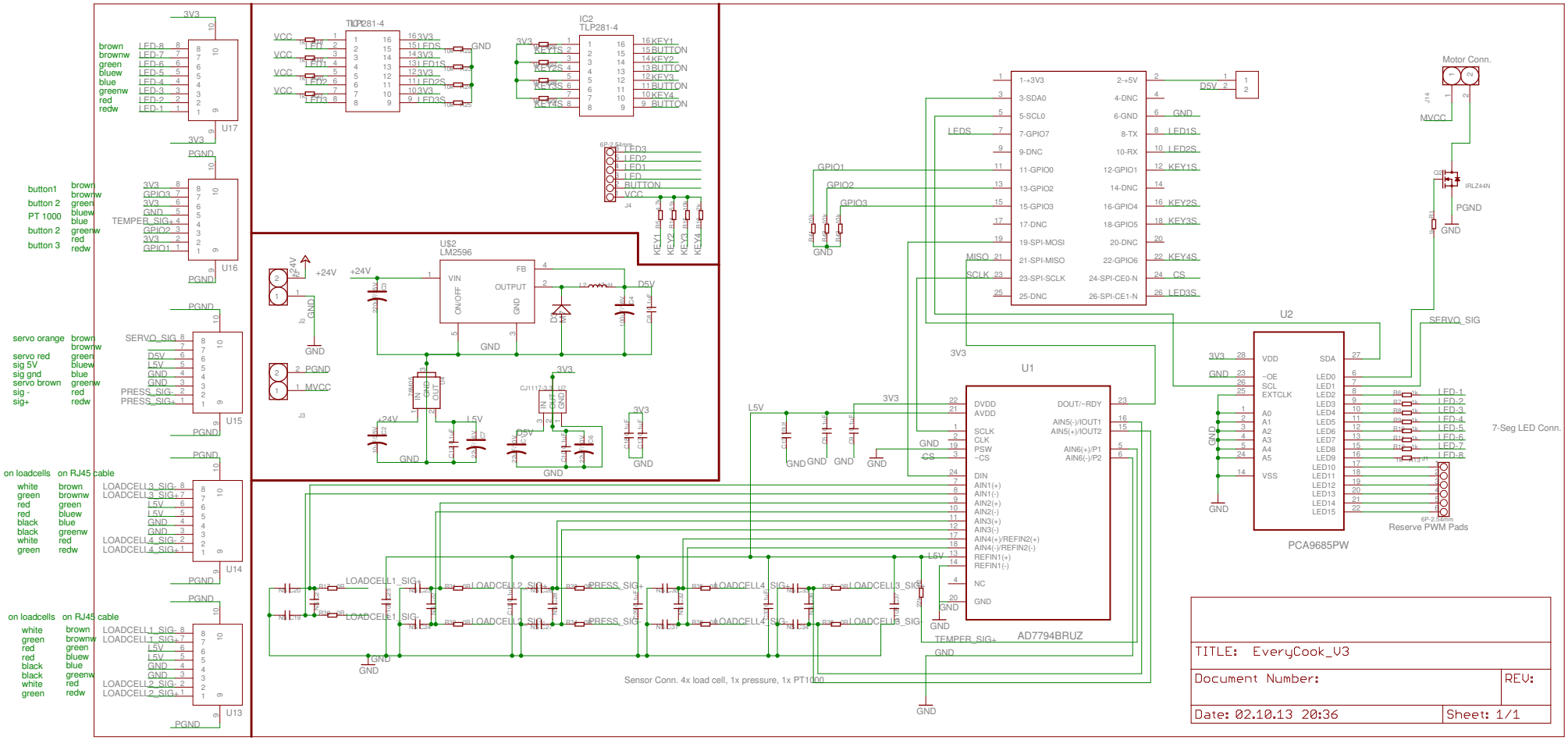
TLP281-4
IC2
TLP281-4
U$2
LM2596
U1
AD7794BRUZ
U2
PCA9685PW
Motor Conn.
7-Seg LED Conn.
Reserve PWM Pads
Sensor Conn. 4x load cell, 1x pressure, 1x PT1000
button1
button 2
PT 1000
button 2
button 3
servo orange
servo red
sig 5V
sig gnd
servo brown
sig -
sig+
on loadcells
on RJ45 cable
TITLE: EveryCook_V3
Document Number:
REV:
Date: 02.10.13 20:36
Sheet: 1/1
SIG1--------MIN
SIG5--------MID
SIG3--------MAX
SIG4--------HOTPOT
SIG6--------HEAT
SIG2--------POWER
KEY1--------FUNSION
KEY2------ -
KEY3------ +
KE43------ ON/OFF