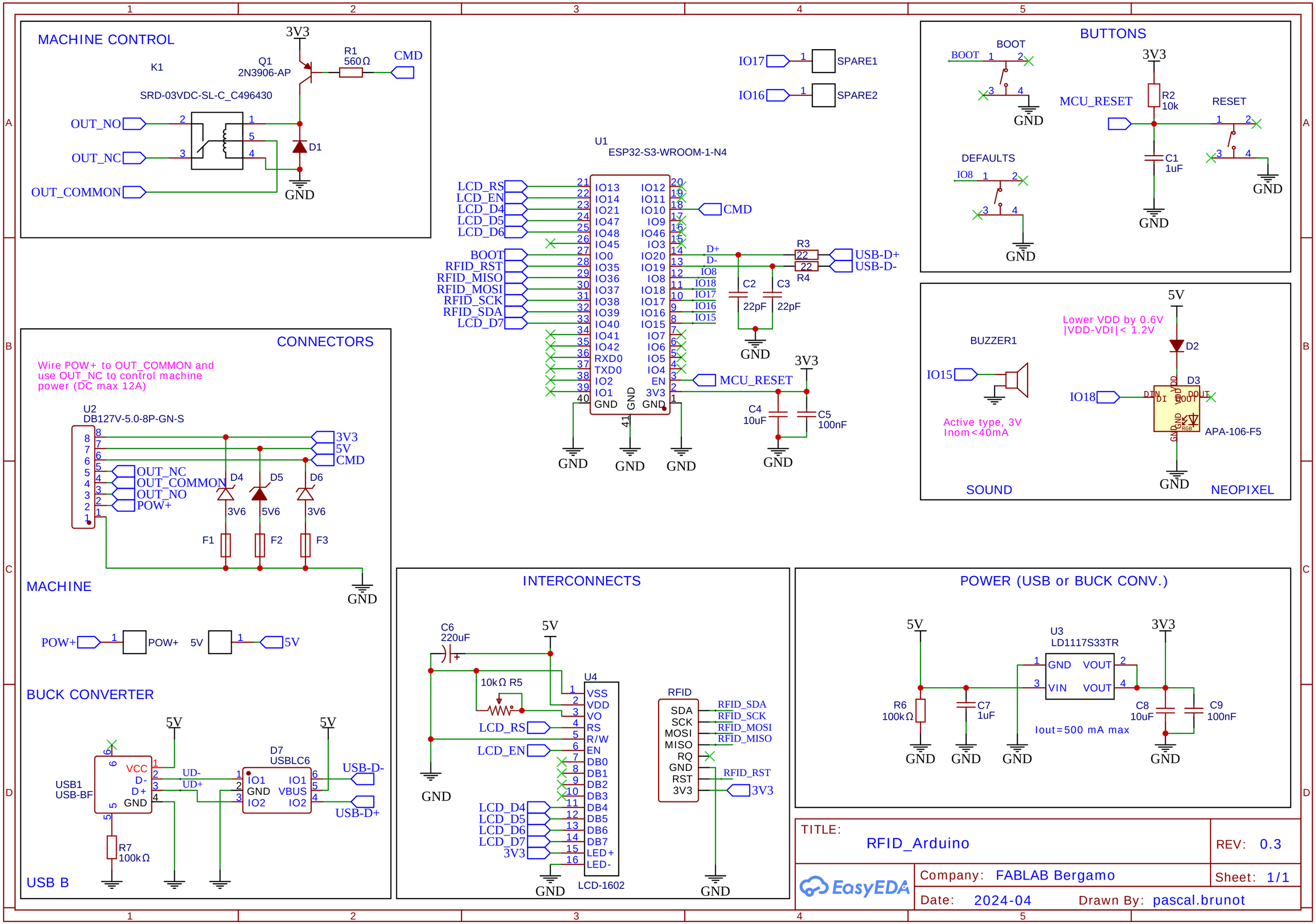
MACHINE CONTROL
K1
SRD-03VDC-SL-C_C496430
Q1
2N3906-AP
R1
560Ω
CMD
3V3
OUT_NO
OUT_NC
OUT_COMMON
D1
GND
IO17
SPARE1
IO16
SPARE2
U1
ESP32-S3-WROOM-1-N4
LCD_RS
LCD_EN
LCD_D4
LCD_D5
LCD_D6
BOOT
RFID_RST
RFID_MISO
RFID_MOSI
RFID_SCK
RFID_SDA
LCD_D7
CMD
MCU_RESET
R3
R4
USB-D+
USB-D-
C2
C3
22pF
C4
10uF
C5
100nF
BUTTONS
BOOT
DEFAULTS
IO8
MCU_RESET
R2
10k
C1
1uF
RESET
BUZZER1
IO15
Active type, 3V
Inom<40mA
SOUND
5V
Lower VDD by 0.6V
|VDD-VDI|< 1.2V
D2
D3
IO18
APA-106-F5
NEOPIXEL
CONNECTORS
Wire POW+ to OUT_COMMON and
use OUT_NC to control machine
power (DC max 12A)
U2
DB127V-5.0-8P-GN-S
OUT_NC
OUT_COMMON
OUT_NO
POW+
D4
D5
D6
3V6
5V6
F1
F2
F3
MACHINE
POW+
5V
BUCK CONVERTER
USB1
USB-BF
VCC
D-
D+
UD-
UD+
D7
USBLC6
IO1
IO2
VBUS
USB-D-
USB-D+
R7
100kΩ
USB B
INTERCONNECTS
C6
220uF
10kΩ R5
U4
LCD-1602
VSS
VDD
VO
RS
R/W
EN
DB0
DB1
DB2
DB3
DB4
DB5
DB6
DB7
LED+
LED-
RFID
SDA
SCK
MOSI
MISO
RQ
RST
POWER (USB or BUCK CONV.)
U3
LD1117S33TR
GND
VOUT
VIN
R6
100kΩ
C7
1uF
C8
10uF
C9
100nF
Iout=500 mA max
TITLE:
RFID_Arduino
REV: 0.3
Company: FABLAB Bergamo
Sheet: 1/1
Date: 2024-04
Drawn By: pascal.brunot
EasyEDA