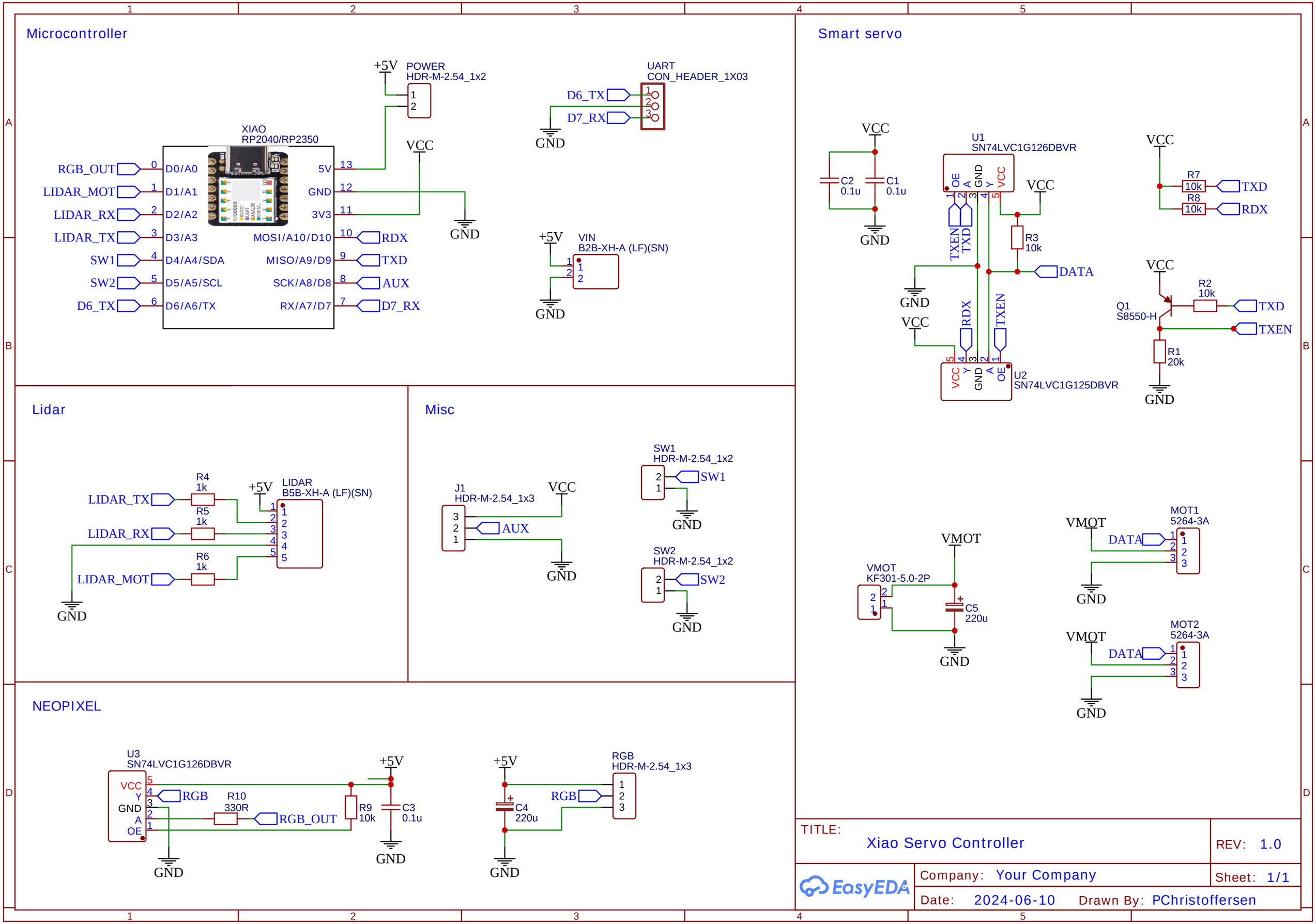
Microcontroller
XIAO
RP2040/RP2350
RGB_OUT
LIDAR_MOT
LIDAR_RX
LIDAR_TX
SW1
SW2
D6_TX
D0/A0
D1/A1
D2/A2
D3/A3
D4/A4/SDA
D5/A5/SCL
D6/A6/TX
5V
GND
3V3
MOSI/A10/D10
MISO/A9/D9
SCK/A8/D8
RX/A7/D7
RDX
TXD
AUX
D7_RX
+5V
POWER
HDR-M-2.54_1x2
VCC
GND
UART
CON_HEADER_1X03
D6_TX
D7_RX
VIN
B2B-XH-A (LF)(SN)
Lidar
R4
1k
R5
1k
R6
1k
LIDAR_TX
LIDAR_RX
LIDAR_MOT
LIDAR
B5B-XH-A (LF)(SN)
Misc
J1
HDR-M-2.54_1x3
AUX
SW1
HDR-M-2.54_1x2
SW2
HDR-M-2.54_1x2
NEOPIXEL
U3
SN74LVC1G126DBVR
VCC
Y
GND
A
OE
RGB
R10
330R
RGB_OUT
R9
10k
C3
0.1u
RGB
HDR-M-2.54_1x3
C4
220u
Smart servo
C2
0.1u
C1
0.1u
U1
SN74LVC1G126DBVR
TXEN
TXD
R3
10k
DATA
RDX
TXEN
U2
SN74LVC1G125DBVR
R7
10k
R8
10k
Q1
S8550-H
R2
10k
R1
20k
VMOT
KF301-5.0-2P
C5
220u
MOT1
5264-3A
MOT2
5264-3A
TITLE:
Xiao Servo Controller
REV: 1.0
Company: Your Company
Sheet: 1/1
Date: 2024-06-10
Drawn By: PChristoffersen
EasyEDA