University College Cork

School of Engineering
Electrical & Electronic Engineering

Study and analysis of a Delta robot
ME6012

Paul Devouge
Student ID: 122107913

19/01/2023

Coláiste na hOllscoile Corcaigh
University College Cork, Ireland

Abstract

Parallel robots have been used for many applications, from industry to surgery for instance. Thanks to its high-speed capacity and high precision, the Delta robot is one of the most popular parallel robot. Moreover, Delta robots offer a relatively large workspace for their size. Due to their structure, with their motors attached to a fixed base, Delta robots can achieve motions with high speed while keeping a good accuracy.

This report provides an overview of the Delta robot, including its history, working principle, and applications. First, a brief history on parallel robots is presented. The kinematics of the Delta robot is then studied and a CAD model is derived. Using the kinematic equations, the workspace is derived. Finally, a singularity analysis is conducted.

Contents

1 Introduction **1**
1.1 Aim and objectives 2

2 Serial and Parallel Manipulators **2**
2.1 Serial Robots 3
2.2 Parallel Robots 4
2.3 Delta robot 6

3 Kinematic Analysis **7**
3.1 Degree of Freedom 9
3.2 Inverse kinematics 9
3.3 Forward kinematics 12
3.4 CAD modelling 14

4 Workspace **16**

5 Singularity analysis **18**
5.1 Singular configurations for parallel robots 18
5.2 Singularity analysis for the Delta-robot 19
5.2.1 Type I singularities 20
5.2.2 Type II singularities 22

6 Discussion **24**

7 Conclusion **26**

List of Figures

1 Unimate industrial robot 1
2 Different applications of the Gough-Stewart platform 5
3 Delta robot 6
4 Geometric model of a Delta robot 8
5 Delta robot leg - geometric model 10
6 Forward kinematics analysis of a Delta robot 13
7 Fusion360 model of a Delta robot 15
8 Delta robot's workspace 17
9 Type I singularity - Perpendicular passive link 21
10 Type I singularity - Fully extended legs 21
11 Type I singularity - Fully retracted legs 22
12 Type II singularity - Virtual plan 23
13 Type II singularity - Perpendicular passive links 24

List of Tables

1 Delta robot dimensions 14
2 Delta robot dimensions 16

List of Abbreviations

ANN Artificial Neural Network. v, 12

CAD Computer Assisted Design. ii, v, 14, 15, 16, 17

DH Denavit-Hartenberg. v, 3, 18

DOF Degree Of Freedom. v, 2, 6, 9, 12, 18, 19, 24

IMU Inertial Measurement Unit. v, 7

PPM Planar Parallel Manipulator. v, 12

SCARA Selective Compliance Assembly Robot Arm. v, 3

List of Symbols

$\theta_{1,2,3}$ Rotation angle of the active joints.

$\varphi_{1,2,3}$ Rotation angle of driving arm: angle formed by the passive link and the prolongation of the active link.

$\psi_{1,2,3}$ Tilt orientation of the driven arm.

$(L_1)_{i=1,2,3}$ Active links length.

$(L_2)_{i=1,2,3}$ Passive links length.

J_Θ Inverse Jacobian matrix.

J_x Forward Jacobian matrix.

R Distance from base center to active joints.

r Distance from platform center to passive joints.

$x\,y\,z$ Coordinates of the platform's center.

1 Introduction

In the 1950s, the first industrial robots were developed to assist human operators in their tasks, or even substituted for them. The earliest industrial robot known is "Unimate" (Fig. [1]), a creation of G. Devol [1]. It was first used in 1961, for the transportation of die castings from an assembly line and the welding of these castings on auto bodies. This robot was a serial robot, consisting in a series of links connected by joints. Robots have a huge place in the industry, where they are used for repetitive tasks, to automate process or to perform tasks that could be potentially harmful to a human operator. As the technology progressed, robots have been more and more empowered, by means of sensors, machine learning, artificial intelligence... Nowadays, robotics applications are not restrained to the sole industry. Robots are used in the medical field, where they help the surgeon to achieve a better accuracy and perform minimally invasive surgery.

Industrial robotics have greatly advanced since the "Unimate" robot. In the 1960s, robots were mainly used for heavy-lifting, allowing to speed up the production in factories. Then, with the development of sensors, microcontrollers and advanced control systems, they shifted from heavy lifting to tasks requiring more precision, like assembly or materials handling, such as palletizing and depalletizing [2]. Common tasks for robots in the industry include welding, painting, material transferring and more generally, every task that is repetitive or that could be dangerous and potentially harmful to humans.

Figure 1: Unimate industrial robot

Source: **robots.ieee.org**

As the technology improved, so did the robots and they are now used for a wide range of applications. Because they can be used to achieve more precise motion, robots are particularly helpful in the medical field [3],[4]. Robots such as the Da Vinci surgical robot allow surgeons to perform difficult surgery with more precision and suppress hand tremors. They can also be used for minimally invasive surgery, allowing for a better recovery of the patients. Furthermore, they are not limited to surgery assistance, they can also be used for simpler tasks such as routine tasks, eg medical supply restock, bed linens transport, etc. Another field of applications is the military field [5]. Robots can be used to carry heavy equipment, rescuing wounded soldiers in combat zone or progress in dangerous area to avoid putting humans at harm.

There are two types of robots: the serial robots and the parallel robots. Serial and parallel robots are two types of industrial robots used extensively in manufacturing and other applications. Serial robots, often referred to as articulated robots, are made up of a number of joints and links connected in a chain-like structure, making it easy to control. Parallel robots on the other hand, are designed with multiple serial chains connected to a fixed base, providing greater stability and rigidity. Both types of robots have specific benefits and drawbacks, and whether they are appropriate for a given task depends on a number of variables, including the required speed, payload capacity, and precision. Delta robots were invented to address the problematic of high-speed operations. Their particular structure, with their motors attached to the main frame, instead of the arms made them particularly efficient for lightweight pick-and-place tasks.

1.1 Aim and objectives

The Delta robot is a very popular robot, widely used in the industry for various tasks. In order to familiarize ourselves with parallel robots and all the theory behind it, we will study the three degree of freedom (DOF) Delta robot. The aim is to understand how this robot is designed and how it operates.To this extent, serial and parallel manipulators are briefly introduced and compared. Then, the kinematic equations of the Delta robot are derived. Using those equations, the workspace of our robot is drawn. Finally, the singularities of the Delta robot are analysed and classified.

2 Serial and Parallel Manipulators

Serial and parallel robots have been extensively studied in the field of robotics. Khalil and Dombre in [6] presented some of the main differences between serial and parallel manipulators. Among these, we have their structure. Serial robots are characterized by an open-loop kind of structure. Meaning that each joint is exactly providing one degree of freedom. In parallel robots, the links are assembled in a closed-loop structure. This makes parallel robots more difficult to control, as each of the limbs must move accordingly. Many researchers have compared the two types of manipulators. In [7],

researchers Pandilov and Dukovski have thoroughly compared both type of robots. Serial robots have a higher degree of freedom and flexibility, making them suitable for applications that require a wide range of motion and precision. Parallel robots are sometimes limited in their motion due to the inherent constraints between each limb.

2.1 Serial Robots

Serial robots have been around for a long time in the industry. In fact, the first industrial robot, Unimate, was a serial robot. Serial robots consist of a series of links and joints. Such configuration is called an open-loop configuration, meaning that there is only one chain of links between the base, ie the element of the robot connected to the ground or a surface, and the end effector. The end effector or tooltip is the element that allows the robot to interact with its environment. It can be anything from grippers, tools to sensors and cameras. Serial robots are often compared to a human arm, the different joints allowing for the same range of motions. That is why serial manipulators links are often referred to as 'arm', 'shoulder', 'elbow' and 'wrist'. In the industry, serial robots are useful because they offer a larger workspace than their parallel counterparts. They are therefore particularly convenient for tasks such as palletizing and de-palletizing, where for example two workstations might be far from one another. Not only do they allow for a greater workspace, but because of their kinematic structure, they are also easier to control. Each added joint add one more degree of freedom to the robot.

There exist different types of serial robots. The three most common are the articulated robot, the Selective Compliant Assembly Robot Arm (or SCARA robot), and the Cartesian robot. Each of them are used in the industry for various tasks. The articulated robot, sometimes called robot arm, to emphasize its resemblance with a human arm, offers one of the largest possible workspace. They cover a wide range of robots, but, most generally, have 6 degree of freedom. Their applications are numerous ([7], [10]): packaging, material handling and transportation, welding, painting... The SCARA robot is a 4 degree of freedom robot, with motion translations along the XYZ axes and one rotation around the Z axis. They are mostly used for pick-and-place as well as assembly activities that require accuracy and high speed. The Cartesian robot only moves through linear motion, along the X,Y and Z axes. Compared to the other types of serial robots, Cartesian robots tend to have a higher payload carrying capacity. Thanks to their linear motion, they generally have a high precision. They are usually used for pick and place operations or to transfer pieces from one process to another.
One of the major advantage of serial robots is their large workspace [7],[11], making them really useful for transporting parts from one process to another, or for palletizing and depalletizing. Another worthy advantage is the simplicity of their kinematic chain, making it quite simple to derive their kinematic equations. In fact, methods such as the Denavit-Hartenberg (DH) method can be applied to easily obtain the forward kinematics. Furthermore, thanks to their simpler structure, it is easier to control them.

However, these robots are limited in their acceleration and speed, due to their high inertia, with each motor being attached to its own limb which can also cause vibrations ([13],[12]). Moreover, due to the cumulatively added error of each limb, they are often limited in accuracy and repeatability. That is why, to address all these issues, parallel robots were developed.

2.2 Parallel Robots

Unlike serial robots, parallel robots are capable of achieving higher precision, speed and possess a higher payload-to-weight ratio. Their structure is based on multiple serial chains. The design of parallel robots can vary widely, but they all share some common characteristics. First, they typically have a fixed base with multiple legs or arms that connect to a moving platform or end-effector ([6]). The links are connected to the platform using a series of joints or connectors that allow for movement in multiple directions. Second, the actuators used in parallel robots are typically prismatic (P) or revolute (R) joints, and they work together to control the position and orientation of the end-effector. Thanks to their multiple chains, the external load can be distributed among all the actuators, which allows parallel robots to support more weight. Furthermore, the error of each limb is compensated by the others, resulting in a more accurate positioning of the robot.
Parallel robots can be classified according to their motion characteristics ([7]). We distinguish three categories: planar, such as the 3RRR planar parallel robot, spherical, with the agile eye manipulator for instance, and finally spatial with robots such as the Delta robot.

One well-known example of a parallel robot is the Stewart-Gough platform ([8],[9]), which uses six prismatic actuators to control the position and orientation of a platform. The Gough platform, also known as the Hexapod, was created in the early 1960's and was used as a tyre testing machine (Fig. [2a]). Later, Stewart created a similar platform to be used as a flight simulator (Fig. [2b]). Today, Stewart-Gough platforms are used in a variety of applications such as flight simulators, machine tool calibration, and motion simulators. Another example is the Delta robot, developed in the early 80's. This manipulator is used for its high-speed capability in pick-and-place operations or for packaging([7],[19],[21]).

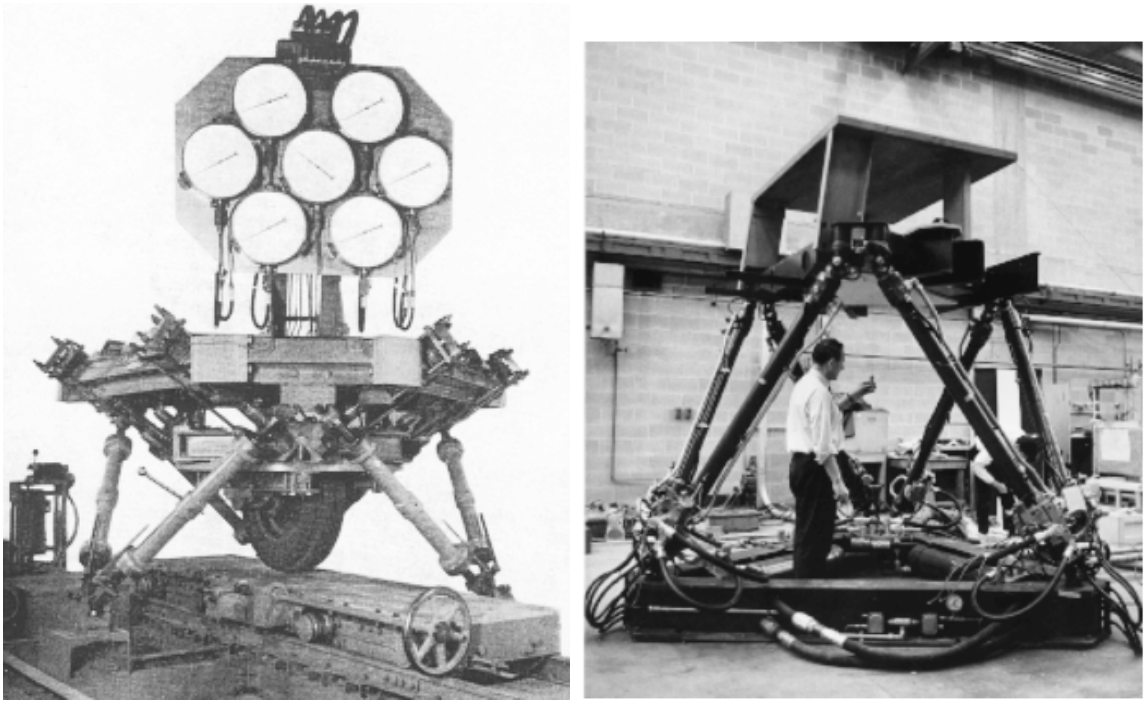

(a) Gough platform - tyre testing machine (b) Early Stewart platform flight simulator

Figure 2: Different applications of the Gough-Stewart platform

Source: **parallemic.org**

Parallel robots are often used in applications where high precision and speed are required. In aerospace, for example, parallel robots are used to simulate the motion of aircraft during flight testing. In manufacturing, parallel robots are used for assembly, inspection, and packaging. In medical robotics, parallel robots are used for surgical procedures, such as spine surgery [4].

One advantage of parallel robots is their high degree of accuracy and repeatability. Because they use multiple actuators to control the end-effector, they can achieve precise and repeatable movements with high accuracy. Additionally, because parallel robots are typically designed to have a fixed base, they are often more stable and can handle heavier loads than serial robots. However, there are also some challenges associated with the design and operation of parallel robots. One challenge is the complexity of the control system required to operate them. Because parallel robots use multiple actuators to control the end-effector, the control system must be able to coordinate the movements of all the actuators simultaneously. This can be a significant technical challenge, and it requires advanced control algorithms and software. Besides, unlike serial robots, parallel manipulators are more limited in their range of motion due to the underlying constraints between each limb. They therefore offer a smaller and more limited workspace.

2.3 Delta robot

The Delta robot is a type of parallel robot that was developed in the early 1980s by Reymond Clavel. It is characterized by three or more arms that are connected to a fixed base and to a moving platform, forming a pyramid-like structure. One of the main challenge in robotics was to achieve high-speed operations. To a significant extent, the Delta robot exhibits a highly promising solution and, as a result, has gained widespread adoption within the industry. The actuators of the Delta robot are placed on the base, thus minimizing the mass of moving parts. This clever design allows these robots to reach high-speed and repeatability (Wilson in [10]).

Figure 3: Delta robot

Source: **parallemic.org**

The Delta robot is a very popular robot in the industry due to its high speed, precision, and versatility, and has been used in a variety of industrial and research applications such as pick and place operations, packaging, assembly, and even 3D printing. The unique design of the delta robot provides it with several advantages, such as high speed, high acceleration, high accuracy, and repeatability, as well as a large workspace relative to its size. The Delta robot has also been shown to be less prone to vibrations and less sensitive to external disturbances, making it ideal for applications that require high levels of precision and stability. Being so popular, there are multiple versions of the Delta robot. Most of them have three or four DOF. In this study we will focus on the most common version: the three DOF Delta robot.

Because the Delta robot is so popular, it has been largely studied by researchers. Many of whom, tried to improve the design and structure of the Delta robot. In [16], Cheng et al. tried to further increase the accuracy of the robot. They conducted an experiment to determine the optimal parameters to limit the vibrations of the manipulator. Using an Inertial Measurement Unit (IMU), they empirically determined the best dynamics parameters for a vibration-free trajectory. Kelaiaia [17] focused on the correction of positioning error of the robot due to elastic deformation. After evaluating the deformations using the theorem of Castiguliano, the tooltip position deviation was obtained and corrected. He was able to achieve an absolute position error of a few um. Researchers in Harvard [18] created a millimetre scale Delta robot, based on compliant joints. Such robots could have applications in micro-assembly, micromanipulation or microsurgery. They were able to achieve a precision down to 5um at frequencies up to 75Hz. Even if the Delta robot has been known for a long time, improvements are still made on its design and analysis.

3 Kinematic Analysis

The Delta robot is a type of parallel robot that consists of two platforms, a fixed upper platform known as the base, and a lower platform, also called the end effector, which can move along the X, Y, and Z axes. The base is fixed, while the lower platform is used to perform standard operations, by means of attached tools such as camera or gripper. In our case, the distance between the upper platform and active link will be noted R. Similarly, the distance between the end-platform and the passive arm is noted r. Our active link length will be noted L1 and the passive link length will be noted L2. The geometrical model of our robot is therefore the following:

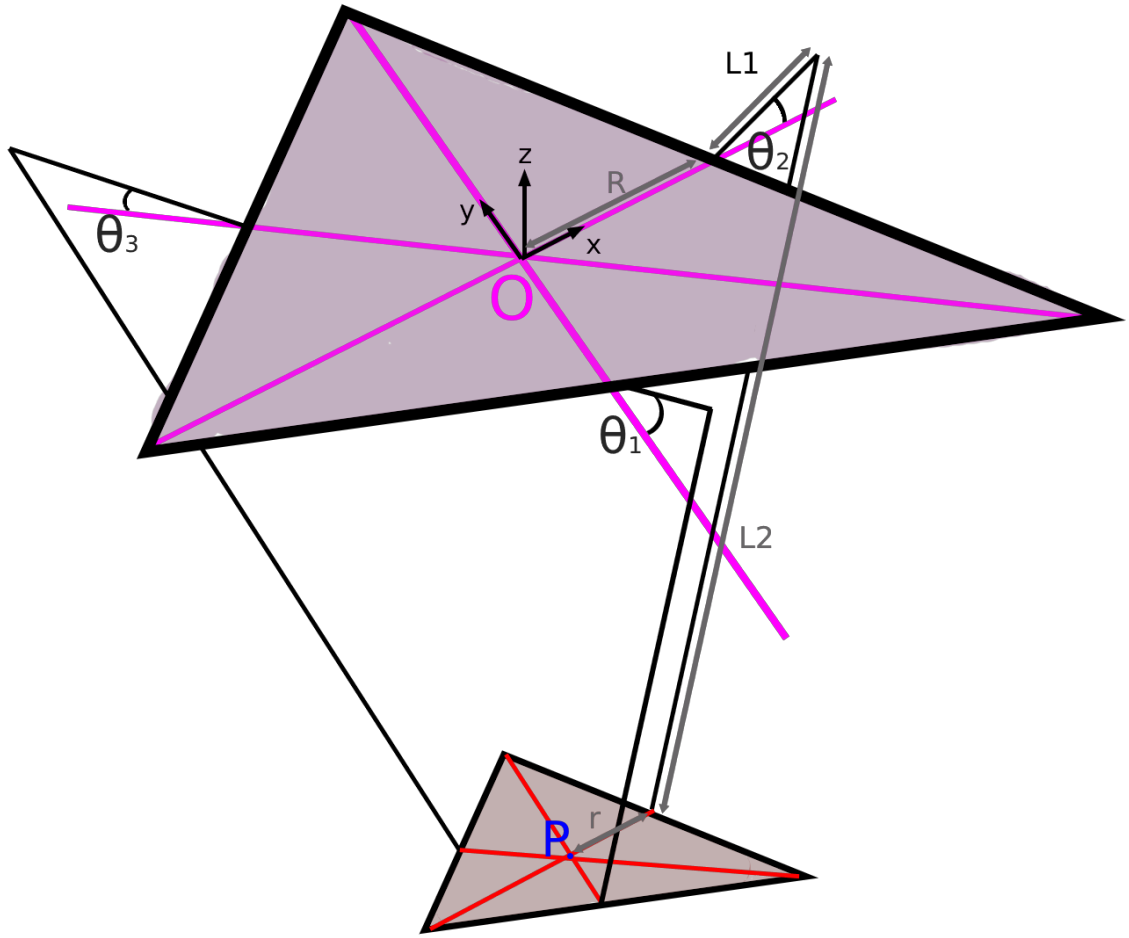

Figure 4: Geometric model of a Delta robot

The base is connected to the end effector by mean of 3 $R-(2S/2S)$ chains. This topology means that the upper limbs are connected to the base via a revolute (R) joint. These upper limbs are actuated and can rotate around the XY axes. They are connected to the passive links via a pair of spherical joint (2S), arranged in a four bar linkage configuration in which opposite sides are of equal length. This special configuration ensures that the mobile platform remains parallel to the base, allowing only for the three translational motion (Pandilov and Dukovski in [7]). Finally, the passive limbs are connected to the lower platform using the same spherical joints (2S). Such joints, in combination with the four-bar linkage, allow for smooth and accurate movements in the X-Y plane.

3.1 Degree of Freedom

Using Grübler's formula for spatial mechanisms, the number of degree of freedom can be calculated.

$$DOF = 6 \times (l - n - 1) + \sum_{i=1}^{n} d_i \tag{1}$$

With l being the robot's total number of rigid bodies (base included), n being the total number of joints and d_i, the number of degree of freedom associated with joint i. Looking at our robot geometric model, it comes directly that $l =$ base+ platform$+3\times$ 2 rigid links $= 8$, $n = 3$ revolute joints $+$ 6 spherical joints $= 9$ and finally, $\sum_{i=1}^{n} d_i =$ 3 for the revolute joints $+$ 12 for the spherical joints. With l,n and d_i being known, we can calculate the number of degree of freedom as:

$$DOF = 6 \times (8 - 9 - 1) + 3 + 12 = 3 \tag{2}$$

meaning that our robot is able to achieve translations along the X-Y-Z axes.
It is worth noting that there exist versions of the delta robot with one additional degree of freedom. For such robot, the end effector is able to rotate around the Z axis, allowing for a wider range of motion. The 4 DOF delta robot has been studied by Tho and Thinh in [19]. To achieve the supplementary rotation around the Z axis, a passive prismatic joint and an active revolute joint are directly attached between the base and the platform. This approach however presents numerous disadvantages, presented in [20] and [21]. The passive prismatic joint is limiting the reachable workspace and reduces the acceleration capability of the Delta robot. To address these issues, another design, based on four R(2S/2S) instead of three has been studied in [22]. Pierrot et al. used a similar approach in [21] to construct a 4-DOF delta-like robot. Their design had the advantage of not presenting any type II singularities (see Chapter 5) and was able to achieve high speed. Using a clever design for the platform they were able to achieve a rotation of the platform with a range of $\pm 180°$.

3.2 Inverse kinematics

The inverse kinematics equations allow to determine the active joint angles, in our case $\Theta_1, \Theta_2, \Theta_3$, based on the end effector position (x,y,z). For parallel manipulators it is in a general case easier to obtain the inverse kinematics equations than it is to obtain the forward ones.
The problem of the inverse kinematics for the Delta robot has been widely addressed in literature. There exists many approaches to obtain and solve such equations. In [23], Yang et al. developed a geometrical approach. They derive the inverse kinematics equations using projections and trigonometric identities. Another geometric approach has been studied in [24]. By considering the intersection of the two circles formed by the actuated link and the projection of the passive link, the precise position of point B_i can be obtained. Using the coordinated of this point, the actuated joint angle can

be calculated. Hadfield et al. in [25] used the same approach.

In this report, a closed-loop equation based approach have been chosen. This approach has been extensively covered by researchers in [27],[28][29],[30]. Because our robot is symmetric, the analysis of the inverse kinematics is only reduced to the study of one of the leg. Using rotation matrices, the equations for all the other legs can be easily obtained.

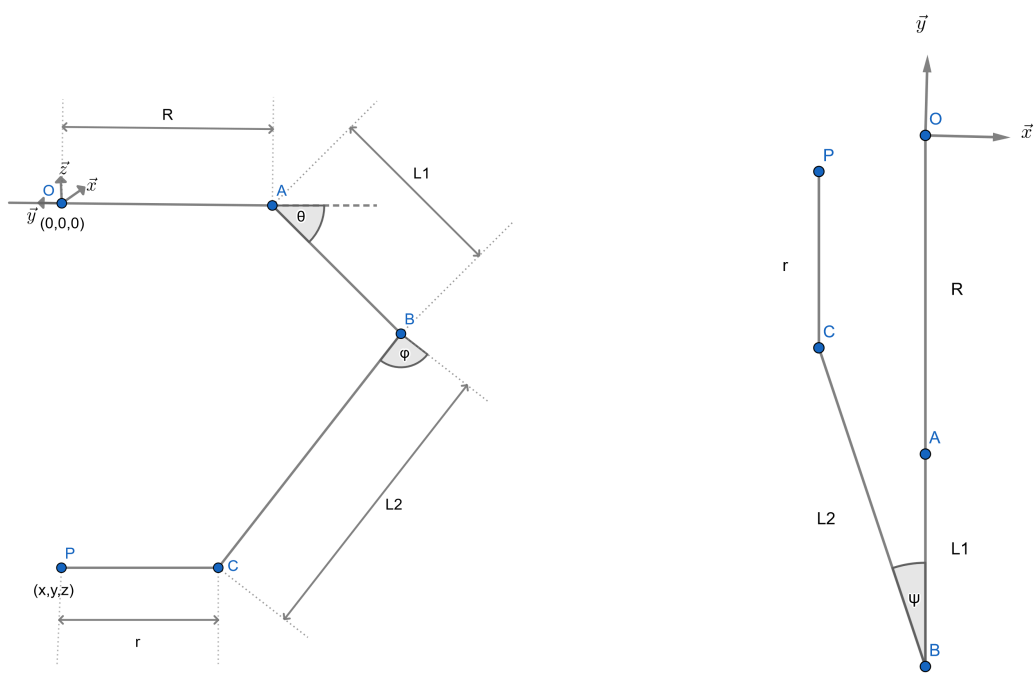

(a) Delta robot leg - side view

(b) Delta robot leg - upper view

Figure 5: Delta robot leg - geometric model

Figure [5] shows one of the leg of the robot seen from the side and from above. The closed-loop equation can be derived:

$$\vec{OA} + \vec{AB} + \vec{BC} + \vec{CP} = \vec{OP} \tag{3}$$

This directly gives us, by projecting each vector in the base 0xyz:

$$\begin{bmatrix} x \\ y \\ z \end{bmatrix} = \begin{bmatrix} 0 \\ -R \\ 0 \end{bmatrix} + \begin{bmatrix} 0 \\ -L_1 cos(\theta_1) \\ L_1 sin(\theta_1) \end{bmatrix} + \begin{bmatrix} -L_2 sin(\psi_1) \\ -L_2 cos(\psi_1) cos(\theta_1 + \varphi_1) \\ -L2 cos(\psi_1) sin(\theta_1 + \varphi_1) \end{bmatrix} + \begin{bmatrix} 0 \\ r \\ 0 \end{bmatrix} \tag{4}$$

The equations for the other legs can be easily deduced, because of the symmetry of our robot, by simply applying a rotation of $\pm 120°$ around the Z axis. This is done by

multiplying the vectors $\vec{OA}$, $\vec{AB}$, $\vec{BC}$ and $\vec{CP}$ by the following rotation matrices:

$$R_{-120^\circ} = \begin{bmatrix} -1/2 & \sqrt{3}/2 & 0 \\ -\sqrt{3}/2 & -1/2 & 0 \\ 0 & 0 & 1 \end{bmatrix} \quad R_{120^\circ} = \begin{bmatrix} -1/2 & -\sqrt{3}/2 & 0 \\ \sqrt{3}/2 & -1/2 & 0 \\ 0 & 0 & 1 \end{bmatrix}$$

By squaring and summing the equations from [4], we obtain the equation:

$$x^2 + (y + R + L_1 cos(\theta_1) - r)^2 + (z - L_1 sin(\theta_1))^2 = L_2^2 \tag{5}$$

After developing this equation we obtain

$$cos(\theta_1)(2L_1(y + R - r)) + sin(\theta_1)(-2zL_1) + (x^2 + (y + R - r)^2 + z^2 + L_1^2 - L_2^2) = 0 \tag{6}$$

which we will rewrite as

$$e_1 cos(\theta_1) + e_2 sin(\theta_1) + e_3 = 0 \tag{7}$$

with

$e_1 = 2L_1(y + R - r)$
$e_2 = -2zL_1$
$e_3 = x^2 + (y + R - r)^2 + z^2 + L_1^2 - L_2^2$

The last step is to use the half-angle substitution. By posing: $cos(\theta_1) = \frac{2t}{1+t^2}$ and $sin(\theta_1) = \frac{1-t^2}{1+t^2}$, a 2nd degree polynomial is obtained. Getting the solutions for such polynomial yields the final expression:

$$\theta_1 = 2arctan\left(\frac{-e_2 \pm \sqrt{e_2^2 + e_1^2 - e_3^2}}{e_3 - e_1}\right) \tag{8}$$

By a similar manner, the angle for the other legs can be obtained. The general equation is given by:

$$e_{i1} cos(\theta_i) + e_{i2} sin(\theta_i) + e_{i3} = 0 \tag{9}$$

with

$e_{i1} = 2L_1((R - r) + ycos(2(i - 1)\pi/3) - xsin(2(i - 1)\pi/3))$
$e_{i2} = -2zL_1$
$e_{i3} = 2y(R - r)cos(2(i - 1)\pi/3) - 2x(R - r)sin(2(i - 1)\pi/3)$
$\quad + R^2 - 2Rr + r^2 + x^2 + y^2 + z^2 + L_1^2 - L_2^2$

With the solutions for our inverse kinematics problem being given by

$$\theta_i = 2arctan\left(\frac{-e_{i2} \pm \sqrt{e_{i2}^2 + e_{i1}^2 - e_{i3}^2}}{e_{i3} - e_{i1}}\right) \tag{10}$$

Since we have a 2nd order polynomial, we have two possible solutions for each leg. Those two solutions correspond to a configuration with the upper legs all out, or all tucked in. It is a common choice to select the solution with all the legs out.

3.3 Forward kinematics

In forward kinematics, also known as direct kinematics, we want to obtain the position of the end-platform with the input angles being known. The solution of the forward kinematic problem can allow to obtain the workspace of our robot but is also used to control our manipulator.
The forward kinematic problem is much more difficult to solve for parallel robots. Because parallel robots are composed of multiple closed-loop chains, the equations to solve are non-linear ([15],[31]) and are most of the time polynomial of high degree (Merlet in [31]). For instance, Merlet and Gosselin have demonstrated in [32] that for planar parallel manipulator (PPM) with 3 DOF, the polynomial of the direct kinematics equation is at least of degree 6 (minimal polynomial). That is why many researchers tried to find new ways of solving the forward kinematics equations.
In the case of the Delta robot, as for the inverse kinematics problem, there exist several approaches to solve the forward kinematics equations. In [33], Liu et al. first presented an analytical approach to this problem. After expressing x and y in terms of z, a quadratic expression in z is obtained and then solved. Liu et al. found that this method did not yield a single optimal solution. That is why they tried a second approach, by using an artificial neural network (ANN). They were able to achieve 100% accuracy in the positioning of the Delta robot platform for an accepted prediction error of ±0.1mm.
Another possibility for the direct kinematics is to use a geometric approach to the problem. This method has been extensively covered in [34],[24],[35],[36],[37]. Stock and Miller in [37], have demonstrated that the only possible solutions for the forward kinematics problem are precisely the intersection points of three spheres. Those three spheres' radius are equal to the lower arms length and their centers are determined by the position of the three upper arms and therefore fixed by the upper arm angles. The intersection of these spheres yields two possible configuration for our Delta robot. However, only one of them is a valid position that takes into account the limitations of our robot. One of these solutions is inside the workspace and in the range of permitted motion, while the other is outside the workspace.

In this report, a geometrical approach to the forward kinematics problem has been preferred. This approach has been presented in [24], [34] and [28]. Let us consider the following diagram:

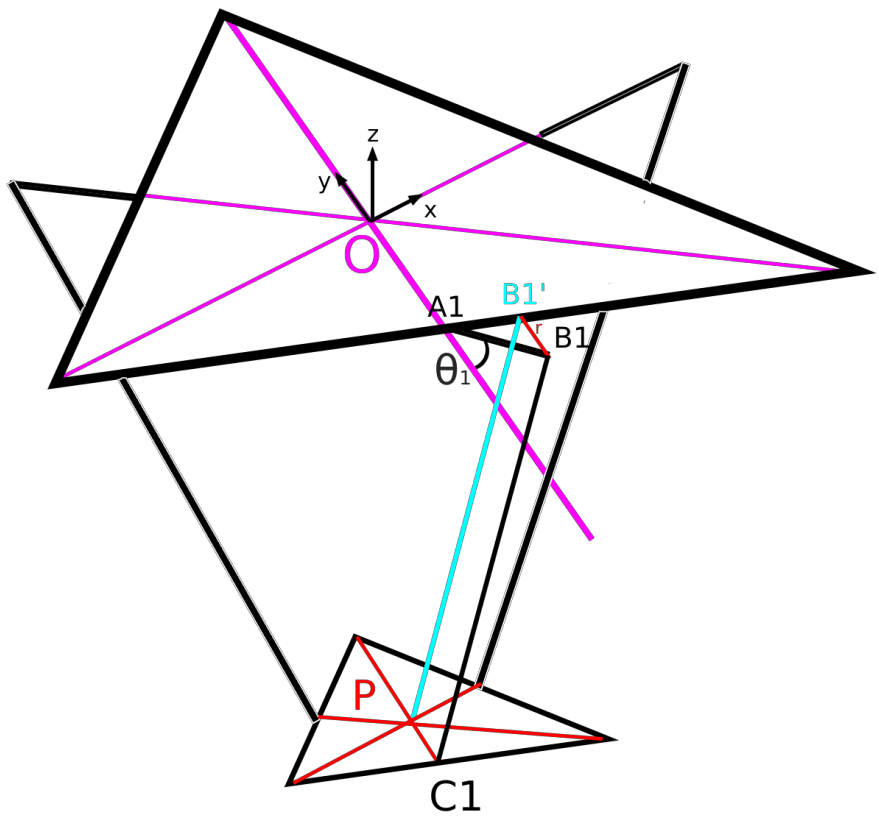

Figure 6: Forward kinematics analysis of a Delta robot

We define a B_1' point as a translation of B_1 by the vector C_1P, such that $\vec{OB_1'} = \vec{OA_1} + \vec{A_1B_1} + \vec{BB_1'}$. This yields:

$$OB_1' = \begin{bmatrix} 0 \\ -K \\ 0 \end{bmatrix} + \begin{bmatrix} 0 \\ -L_1cos(\theta_1) \\ L_1sin(\theta_1) \end{bmatrix} + \begin{bmatrix} 0 \\ r \\ 0 \end{bmatrix} = \begin{bmatrix} 0 \\ -K - L_1cos(\theta_1) + r \\ L_1sin(\theta_1) \end{bmatrix} \tag{11}$$

And similarly for each other leg, by applying a rotation of $\pm 120°$:

$$OB_2' = \begin{bmatrix} -\frac{\sqrt{3}}{2}(-K - L_1cos(\theta_2) + r) \\ -\frac{1}{2}(-K - L_1cos(\theta_2) + r) \\ L_1sin(\theta_2) \end{bmatrix} \quad OB_3' = \begin{bmatrix} \frac{\sqrt{3}}{2}(-K - L_1cos(\theta_3) + r) \\ -\frac{1}{2}(-K - L_1cos(\theta_3) + r) \\ L_1sin(\theta_3) \end{bmatrix} \tag{12}$$

If we draw three spheres of centre OB'_i and radius L_2, they will all intersect at point P. The equations of such circles are namely:

$$(x - x_{B1'})^2 + (y - y_{B1'})^2 + (z - z_{B1'})^2 = |B'_1P|^2 = L_2^2 \tag{13}$$
$$(x - x_{B2'})^2 + (y - y_{B2'})^2 + (z - z_{B2'})^2 = |B'_2P|^2 = L_2^2 \tag{14}$$
$$(x - x_{B3'})^2 + (y - y_{B3'})^2 + (z - z_{B3'})^2 = |B'_3P|^2 = L_2^2 \tag{15}$$

If we then subtract (9) by (10), (9) by (11) and (10) by (11), we have:

$$2x(x_{B2'} - x_{B1'}) + 2y(y_{B2'} - y_{B1'}) + 2z(z_{B2'} - z_{B1'}) = x_{B2'}^2 - x_{B1'}^2 + y_{B2'}^2 - y_{B1'}^2 + z_{B2'}^2 - z_{B1'}^2 \tag{16}$$
$$2x(x_{B3'} - x_{B1'}) + 2y(y_{B3'} - y_{B1'}) + 2z(z_{B3'} - z_{B1'}) = x_{B3'}^2 - x_{B1'}^2 + y_{B3'}^2 - y_{B1'}^2 + z_{B3'}^2 - z_{B1'}^2 \tag{17}$$
$$2x(x_{B3'} - x_{B2'}) + 2y(y_{B3'} - y_{B2'}) + 2z(z_{B3'} - z_{B2'}) = x_{B3'}^2 - x_{B2'}^2 + y_{B3'}^2 - y_{B2'}^2 + z_{B3'}^2 - z_{B2'}^2 \tag{18}$$

Using those equations, we can express both x and y in terms of z. Finally, by substituting x and y in the first equation, we now have a quadratic equation with the sole unknown being z. Solving this equation directly gives the solution for x and y. Notice that since we have a quadratic expression in z, there is two analytical possible solutions for the forward kinematics problem. In fact, from a geometric point of view, the three spheres intersect in P, but also in another point, the second possible solution for z. However, only one of them is acceptable, and is part of the workspace of our robot. The other solution is unreachable due to the structure of the Delta robot.

3.4 CAD modelling

To verify our calculation and allow for a better visualization of the possible movements of a robot, it is a good choice to design a simplified model of it using any Computer Assisted Design (CAD) software. The most common choice is *SolidWorks*, since this software is often used in the industry. In our case, a model of the Delta robot has been created using *Fusion360*, another CAD software.
In our case, we have fixed the dimensions as follows:

Parameter	*Name*	*Value*
Fixed-platform radius	R	116mm
Moving platform radius	r	50mm
Active link length	L1	90mm
Passive link length	L2	250mm

Table 1: Delta robot dimensions

The dimensions have been chosen based on the design of other researchers. Using such dimensions, the following model has been designed:

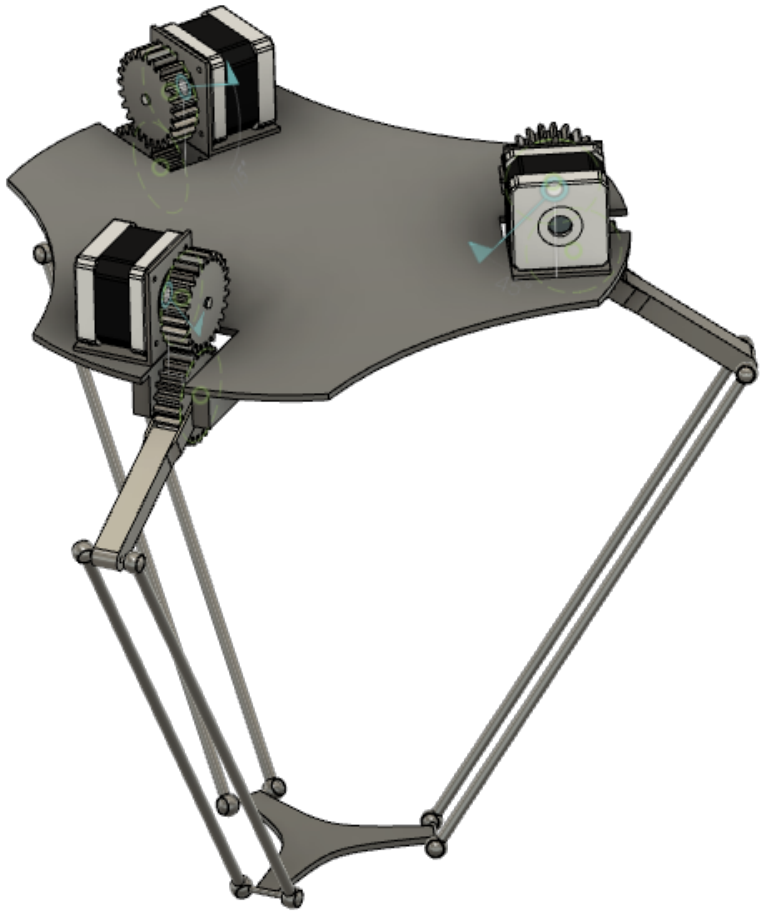

Figure 7: Fusion360 model of a Delta robot

Based on our model, we can verify our kinematic analysis. Using the same dimensions as for the CAD model, we tried to obtain the angles for different positions and trajectories from both our model and our kinematic equations.
The results are consigned in the following table:

End-effector position	$\theta_{1,2,3}$ from model angles			$\theta_{1,2,3}$ from kinematic equations		
(x,y,z)	θ_1	θ_2	θ_3	θ_1	θ_2	θ_3
(0,0,-200)	2.1°	2°	2.1°	0°	0°	0°
(0,0,-150)	42.4°	42.2°	42.4°	45.2°	45.2°	45.2°
(0,50,-200)	29.7°	4.4°	4.4°	28.6°	5.6°	5.6°
(50,50,-200)	33.7°	21.8°	20.5°	32.1°	23.5°	19°
(100,100,-150)	56.7°	81.2°	29.9°	55.6°	84.2°	29.6°

Table 2: Delta robot dimensions

As we can see from the table, our kinematic equations seem correct, as we have a few degrees of error between the CAD design and the analytical values. This small error is probably due to some inaccuracy when measuring the angles on *Fusion360*. Nevertheless, we can be confident that our kinematic equations are correct.

4 Workspace

When designing a robot, one of the most important things to take into consideration is the robot's workspace. The workspace defines all the reachable positions of the end-platform. In the case of serial robots, the workspace is roughly approximated as the reachable surface for each of the limb that composes the robot. For parallel robots however, due to the constraints between each limb, the workspace analysis can be much more difficult.
There are mainly three approaches to obtain the workspace of a robot: the geometrical method, the analytical method and the numerical method. The geometrical method is probably the most straightforward, since it does not involve any complicated equations nor computations. It can also give a good first approximation of the general workspace of the robot. If we want to obtain a particular workspace however, for instance the singularity free workspace or the compliant workspace if our robot is using compliant joints, we might have to use the other two methods. In the analytical method, the kinematic equations are used: mainly the forward kinematics, as it gives the unknown end-effector position for any set of known input angles. Given a set of inputs the end-platform can be obtained for various configurations. Such approach however, may be computationally intensive and much more time-consuming. Moreover, this approach may not take into account the joints limitations (Zhou et al in [38]). That is why a numerical approach can be a good compromise. Using a discretization, the kinematics is solved for each point and the constraints for each of the joints are verified. It is worth mentioning that a combination of all these methods can be used: e.g., solve the workspace for one particular limb using the analytical approach and then combine the result of each limb using a geometrical approach.

In [39], Bentaleb et al. used a numerical approach based on the direct kinematics equations to obtain the workspace. They resorted to this method because they wanted to obtain the workspace with singularity avoidance. Therefore, they limited the angle of each joint and used the forward kinematics to obtain the platform position. Similarly, in [40] Prempraneerach used the numerical method to compare the workspace for different configurations of the length of the Delta robot's links. Similarly to those papers, a workspace analysis based on the direct kinematics is proposed here. We fixed the parameters as for the CAD model, meaning:
R=110mm, L1=90mm, L2=250mm, r=50mm

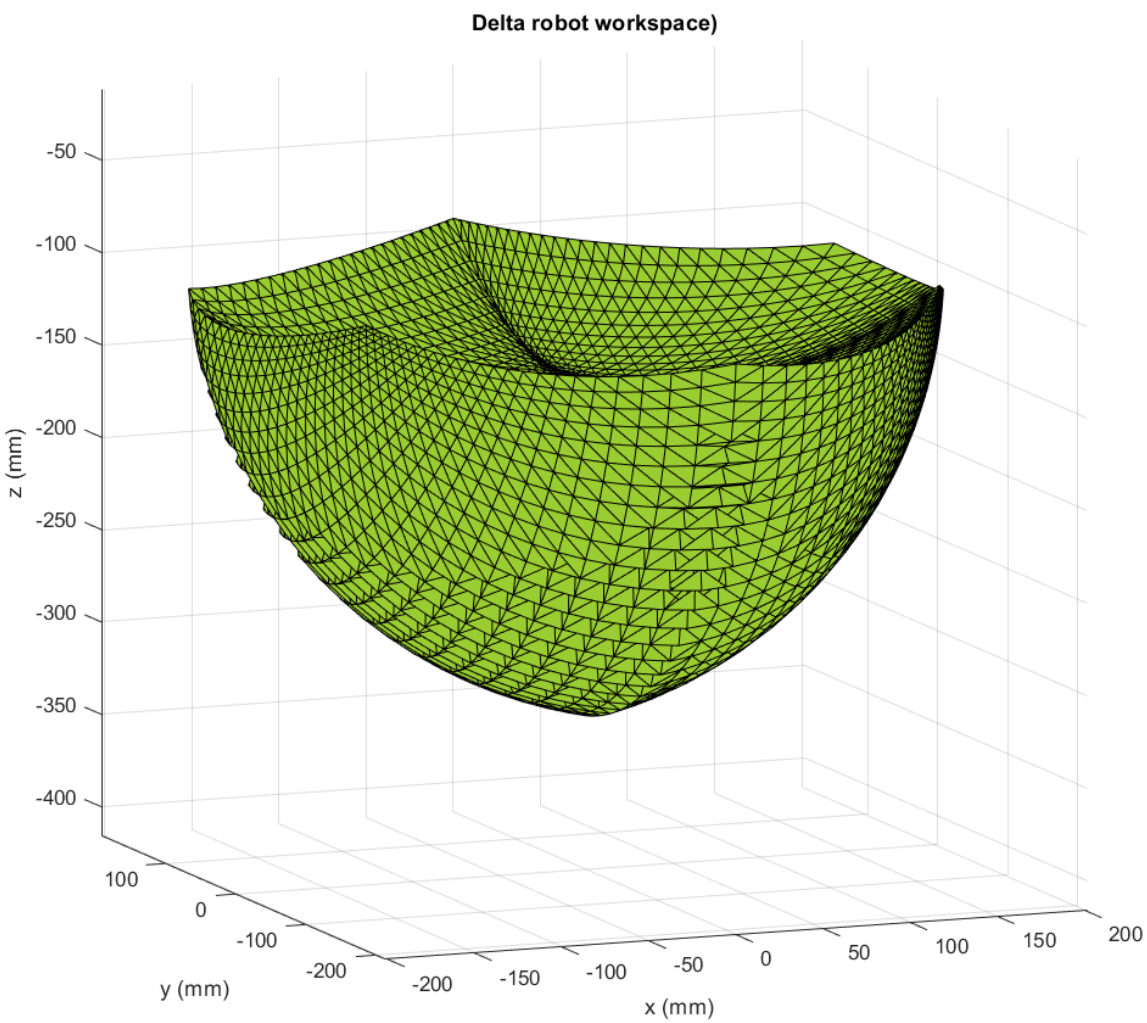

Figure 8: Delta robot's workspace

The workspace of the Delta robot is a cone-shaped region. Using Matlab we were able to obtain the volume of our workspace. With the chosen lengths, our workspace

has a volume of $12500cm^3$.

5 Singularity analysis

5.1 Singular configurations for parallel robots

The Jacobian matrix provides a relation between joint velocity and end-effector speed. A configuration of the robot in which the Jacobian becomes rank deficient is called a singularity [41]. For parallel manipulators, singular positions are positions associated with the gain or loss of one or more DOF. Gosselin and Angeles in [41] have thoroughly studied singularities in parallel robots. They classified singular configurations based on Jacobian matrices analysis and distinguished three different types of singularities. In the case of parallel manipulators, they decomposed the Jacobian into the forward and inverse Jacobians and classified singularities according to the rank-deficiency of either one of the two Jacobians.
In our case, we will note J_θ as the inverse Jacobian and J_X as the forward Jacobian. Our relation will be of the form:

$$J_X \begin{bmatrix} \dot{x} \\ \dot{y} \\ \dot{z} \end{bmatrix} = J_\theta \begin{bmatrix} \dot{\theta}_1 \\ \dot{\theta}_2 \\ \dot{\theta}_3 \end{bmatrix}$$

Type I singularities, also known as inverse singularities are associated with a rank deficiency of the inverse Jacobian. Such configurations are associated with a loss of mobility, meaning that we lose one or more DOF [41],[43]. In a type I singularity, an input motion, in our case a rotation of the upper legs, causes no output motion of the end effector. They occur at the boundary of the manipulator's workspace. For type II singularities, the forward Jacobian becomes rank deficient. That is why such singular configurations are known as forward singularities. For such configurations, the parallel manipulator gain one or more DOF. In that case, the actuated joints are locked in place, yet, the end-effector is able to achieve motion. Type II singularities are internal to the workspace. Finally, a configuration in which both Jacobians suddenly become rank-deficient is known as a type III singularity. Gosselin and Angeles demonstrated that third type singularities are only occurring for a particular condition on the linkage parameters.

Researchers tried different approaches to find the singular configurations of the Delta robot. In [42], Dudici and Simionescu used the DH matrices to perform the kinematic analysis of the robot. Using an iterative approach based on the Newton-Raphson method they linearized the equations and obtained the Jacobian matrices. Looking at the variations of the Jacobian determinant with respect to the joint angles, they were able to find singular configurations. This method however, being a numerical approach, only gives one particular singular configuration and not all singular configurations. In

[43], researchers carried an analysis of the Delta robot singularities based on the exact kinematic equations. Some researchers even went further and have analysed singularities for Delta-like manipulators. Delta-like robots are robots with an architecture close to the traditional Delta robot, whose DOF are not necessarily translational [44]. The provided equations contain the geometric parameters of the manipulator. Thus, these can be employed to design manipulators with workspaces containing no singularities, known as singularity-free workspace.

5.2 Singularity analysis for the Delta-robot

To analyse the singular configurations of the Delta-robot, we first need to obtain the inverse and forward Jacobians. Differentiating equation [4] with respect to time directly gives us:

$$\begin{bmatrix}\dot{x}\\ \dot{y}\\ \dot{z}\end{bmatrix} = \begin{bmatrix}0\\ \dot{\theta}_1 L_1 sin(\theta_1)\\ \dot{\theta}_1 L_1 cos(\theta_1)\end{bmatrix} + \begin{bmatrix}-\dot{\psi}_1 L_2 cos(\psi_1)\\ \dot{\psi}_1 L_2 sin(\psi_1) cos(\theta_1+\varphi_1) + (\dot{\theta}_1+\dot{\varphi}_1) L_2 cos(\psi_1) sin(\theta_1+\varphi_1)\\ \dot{\psi}_1 L_2 sin(\psi_1) sin(\theta_1+\varphi_1) - (\dot{\theta}_1+\dot{\varphi}_1) L_2 cos(\psi_1) cos(\theta_1+\varphi_1)\end{bmatrix} \tag{19}$$

These equations have a dependency on $\dot{\psi}_1$, which we do not want. To get rid of this dependency we will simply multiply those by matrix: $\begin{bmatrix}-L_2 sin(\psi_1)\\ -L_2 cos(\psi_1) cos(\theta_1+\varphi_1)\\ -L_2 cos(\psi_1) sin(\theta_1+\varphi_1)\end{bmatrix}^T$

This is equivalent to a cross-product of vector $\vec{CP}$ with itself and therefore cancels the term in ψ_1. Our equation is reduced to

$$\begin{bmatrix}-L_2 sin(\psi_1)\\ -L_2 cos(\psi_1) cos(\theta_1+\varphi_1)\\ -L_2 cos(\psi_1) sin(\theta_1+\varphi_1)\end{bmatrix}^T \begin{bmatrix}\dot{x}\\ \dot{y}\\ \dot{z}\end{bmatrix} = \begin{bmatrix}-L_2 sin(\psi_1)\\ -L_2 cos(\psi_1) cos(\theta_1+\varphi_1)\\ -L_2 cos(\psi_1) sin(\theta_1+\varphi_1)\end{bmatrix}^T \begin{bmatrix}0\\ \dot{\theta}_1 L_1 sin(\theta_1)\\ \dot{\theta}_1 L_1 cos(\theta_1)\end{bmatrix} \tag{20}$$

Simplifying the right-hand side of this system gives us the dependency between the velocity of the end-platform and the angular speed of the first actuated joint.

$$\begin{bmatrix}-L_2 sin(\psi_1)\\ -L_2 cos(\psi_1) cos(\theta_1+\varphi_1)\\ -L_2 cos(\psi_1) sin(\theta_1+\varphi_1)\end{bmatrix}^T \begin{bmatrix}\dot{x}\\ \dot{y}\\ \dot{z}\end{bmatrix} = -\dot{\theta}_1 L_1 L_2 cos(\psi_1) sin(\varphi_1) \tag{21}$$

By a similar manner, and using the rotation matrices, the equations for the other legs are obtained. This yields the final expression:

$$\begin{bmatrix}J_{X11} & J_{X12} & J_{X13}\\ J_{X21} & J_{X22} & J_{X23}\\ J_{X31} & J_{X32} & J_{X33}\end{bmatrix} \begin{bmatrix}\dot{x}\\ \dot{y}\\ \dot{z}\end{bmatrix} = \begin{bmatrix}J_{\theta 1} & 0 & 0\\ 0 & J_{\theta 2} & 0\\ 0 & 0 & J_{\theta 3}\end{bmatrix} \begin{bmatrix}\dot{\theta}_1\\ \dot{\theta}_2\\ \dot{\theta}_3\end{bmatrix} \tag{22}$$

With

$$J_{Xi1} = -L_2 sin(\psi_i) cos\left(\frac{2\pi}{3}(i-1)\right) + L_2 cos(\psi_i) cos(\theta_i + \varphi_i) sin\left(\frac{2\pi}{3}(i-1)\right)$$
$$J_{Xi2} = -L_2 sin(\psi_i) sin\left(\frac{2\pi}{3}(i-1)\right) - L_2 cos(\psi_i) cos(\theta_i + \varphi_i) cos\left(\frac{2\pi}{3}(i-1)\right)$$
$$J_{Xi3} = -L_2 cos(\psi_i) sin(\theta_i + \varphi_i)$$

and

$$J_{\theta i} = -L_1 L_2 cos(\psi_i) sin(\varphi_i)$$

The terms in J_X are associated with the forward Jacobian while those in J_θ are related to the inverse Jacobian.

5.2.1 Type I singularities

Type I singularities occur whenever $det(J_\theta) = 0$. The expression for the determinant of J_θ is pretty straightforward, our matrix being diagonal. Type I singularities verify:

$$-(L_1 L_2)^3 cos(\psi_1) sin(\varphi_1) cos(\psi_2) sin(\varphi_2) cos(\psi_3) sin(\varphi_3) = 0 \tag{23}$$

Type I singularities are therefore associated with positions for which

$$\psi_i = k\frac{\pi}{2} \tag{24}$$

$$\varphi_i = k\pi \tag{25}$$

, for $k \in \mathbb{Z}$

Looking back at our schematic for the Delta robot, condition (24) implies that the passive limb has to be perpendicular to the active limb and along the direction of the active link axis of rotation. This configuration is impossible to reach due to the structure of our Delta robot. The passive links are constrained by their joints and by the active links. Nevertheless, Figure [9] shows this configuration.

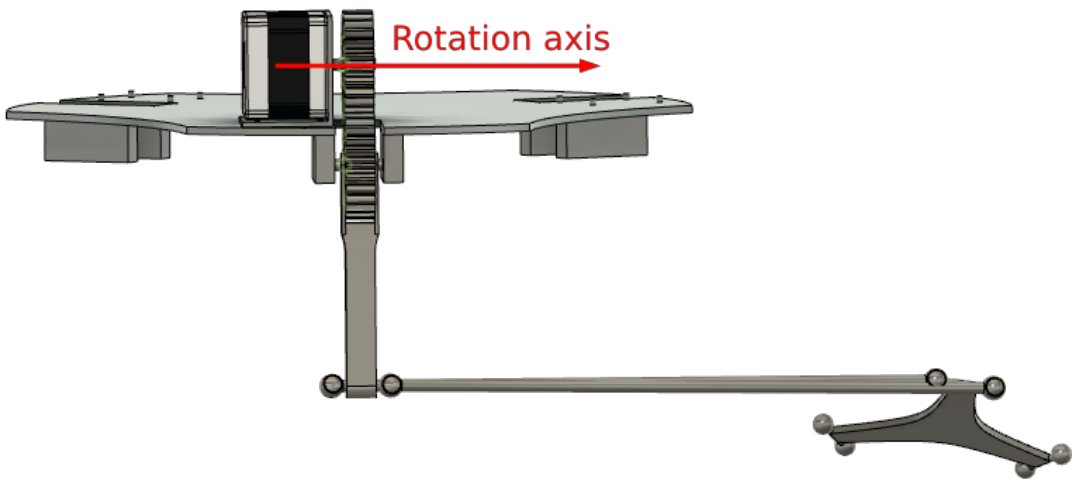

Figure 9: Type I singularity - Perpendicular passive link

In condition (25), one of the robot's leg are either completely extended (in which case $\varphi_i = 0$) or completely folded upon itself, with the passive and active leg superposed ($\varphi_i = \pi$). Both configurations are depicted in Figures [10] and [11]. For both configurations, the end effector is unable to achieve any motion and is locked in place.

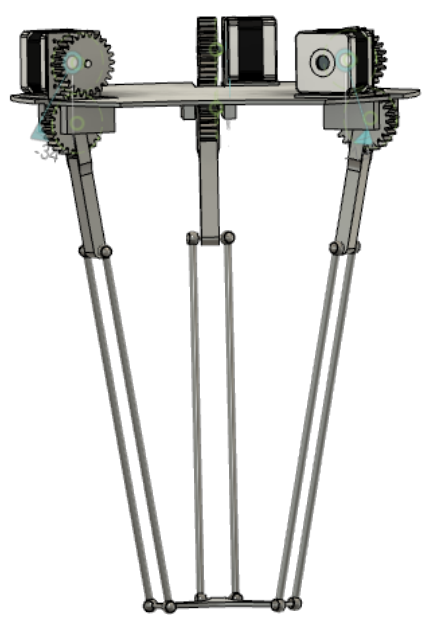

Figure 10: Type I singularity - Fully extended legs

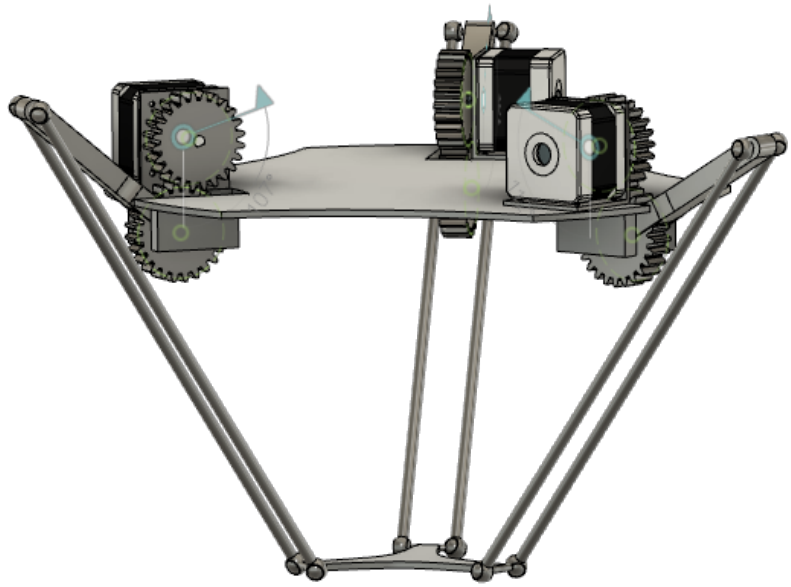

Figure 11: Type I singularity - Fully retracted legs

5.2.2 Type II singularities

For type II singularities to happen, the matrix J_X must become rank-deficient. Such condition will be happening if one of the column cancels, that is:

$$\psi_{1,2,3} = k\frac{\pi}{2} \tag{26}$$

$$\theta_{1,2,3} + \varphi_{1,2,3} = k\pi \tag{27}$$

In both conditions, the third column of J_X becomes equal to 0 and thus, J_X is rank-deficient.
Another possibility is that:

$$\theta_{1,2,3} + \varphi_{1,2,3} = k\frac{\pi}{2} \quad \& \quad \psi_{1,2,3} = k\pi \tag{28}$$

In that case, if $\theta_{1,2,3} + \varphi_{1,2,3} = k\frac{\pi}{2}$, then $cos(\theta_{1,2,3} + \varphi_{1,2,3}) = 0$. The forward Jacobian is therefore equal to:

$$J_X = \begin{bmatrix} -L_2 sin(\psi_1) & 0 & -L_2 cos(\psi_1) \\ -L_2 sin(\psi_2) cos\left(\frac{2\pi}{3}\right) & -L_2 sin(\psi_2) sin\left(\frac{2\pi}{3}\right) & -L_2 cos(\psi_2) \\ -L_2 sin(\psi_3) cos\left(\frac{4\pi}{3}\right) & -L_2 sin(\psi_3) sin\left(\frac{4\pi}{3}\right) & -L_2 cos(\psi_3) \end{bmatrix} \tag{29}$$

And it is clear that if $\psi_{1,2,3} = k\pi$, the determinant of J_X is zero.

Condition (26) again, implies that the passive limb is perpendicular to the active limb

and in the direction of the rotation. For a type I singularity to occur, it was sufficient to have only one of the leg met this condition. On the contrary, for a type II singularity, all the legs must have their active and passive link perpendicular and all the passive links must be in the direction of the active link axis of rotation. This makes this singularity impossible to occur. Each passive link is connected to the platform, making it impossible to have all of them perpendicular to the active links and parallel to the base all at the same time.
Condition (27) implies that all the passive limbs L_2 lie in the same plane as the moving platform. This configuration is in practice unreachable due to the robot's geometry. Lopez et al. in [43], have represented this configuration as a 'virtual plan'. We used the same representation in Figure [12], where we can see why in practice, we will never reach this singularity.

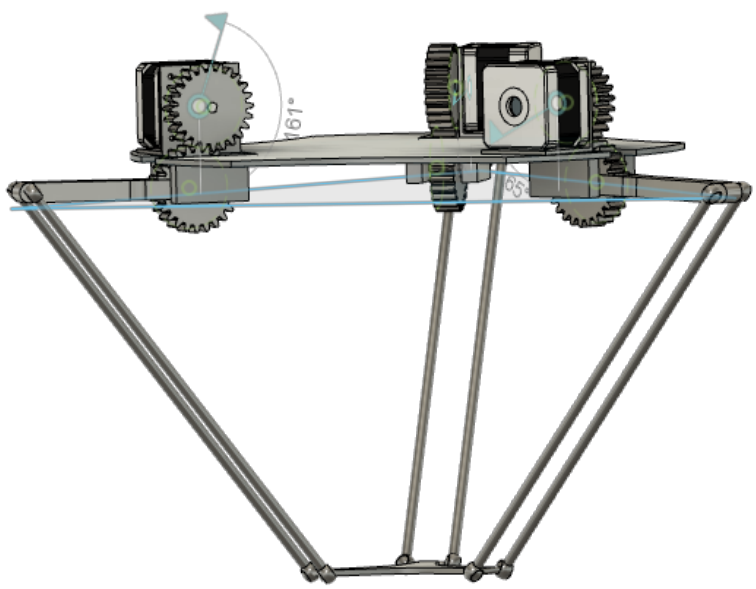

Figure 12: Type II singularity - Virtual plan

Finally, condition (28) is a configuration in which all the active links are parallel to the base and perpendicular to the passive links. Figure [13] depicts such configuration. With this configuration, if we were to lock up the active links, the passive ones and the platform would still be able to move.

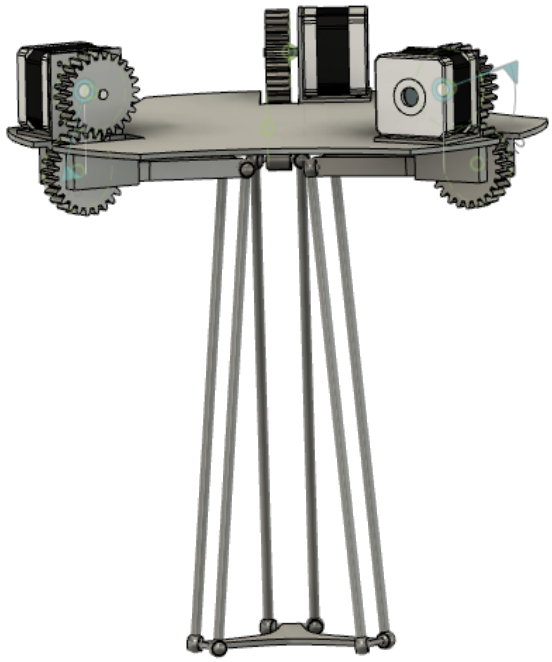

Figure 13: Type II singularity - Perpendicular passive links

6 Discussion

The delta robot is a parallel robot used in various industrial applications that require high-speed and high-precision movements. In this paper, we investigated the kinematics, workspace, and singularity of the delta robot.

The 3-DOF Delta robot has been analysed. Delta robots with 4DOF has also been briefly presented. The inverse kinematics of the delta robot was analysed using an analytical approach based on closed-loop equation. The closed-loop equations were derived based on the geometric and kinematic properties of the delta robot. The forward kinematics was derived using a geometrical approach, base on the limitation of the Delta robot arms.

The workspace of the delta robot was also addressed in this study. The workspace is defined as the region of space that the end effector of the robot can reach. The workspace of the delta robot is limited by its mechanical structure and the joint limits of its actuators. To determine the workspace of the delta robot, we performed a numerical simulation using *Matlab* based on the forward kinematics equations. The simulation results showed that the workspace of the Delta robot is a truncated cone-shaped region.

Singularity is a critical issue in the operation of robotic systems. A singularity occurs when the robot loses or gains one or more degrees of freedom, which can lead to a sudden change in the robot's behaviour. In this study, we investigated the singularities of the Delta robot and their effects on its DOF. The singularities of the delta robot

were determined using the Jacobian matrix, which describes the relationship between the joint velocities and the end effector velocity. Our results show that some of the singularities of the robot will never occur, due to the structure of the Delta robot. We demonstrated three possible singularity configuration that the Delta robot can encounter: all legs extended, all legs retracted and perpendicular passive links.

This study investigated the kinematics, workspace, and singularity of the delta robot. The results showed that the delta robot has a limited workspace but relatively big compared to the robot's size and the place it occupies. We also showed that the Delta robot has mainly three possible singularities that can affect its performance. These findings can be useful in the design and control of the delta robot for various industrial applications. Further research could be conducted to investigate the dynamic behaviour of the delta robot and its control strategies to improve its performance.

7 Conclusion

In this report we briefly introduced both serial and parallel manipulators and compared them. A history of the Delta robot and its advantages in the industry has been presented. We addressed the number of degree of freedom in Delta robots and we derived the kinematic equations for both the forward and inverse kinematics. Those equations have been verified using a model designed using *Fusion 360*. We obtained the workspace of the delta robot using the forward kinematics and showed that it was relatively large compared to the space occupied by the delta robot. Finally, we addressed the problem of singularities in parallel robots and calculated the conditions for such singularities to happen in Delta robots.

In conclusion, the Delta robot is a popular robot in the industry. Its high-speed applications and high accuracy have made it a suitable choice for a variety of tasks, from pick-and-place tasks to micro-assembly in the industrial field and even for medical procedures in healthcare. Nowadays, a lot of improvements are made on the initial design, with the addition of new degree of freedom or end-effector tools for instance. With the rise of industry 4.0, it is clear that the Delta robot will still be perfected with time, to address an even wider variety of tasks. Especially with the development of soft robotics and compliant mechanisms that will provide new improvements and make it more capable than ever.

References

[1] J. M. Norman, George Devol Invents Unimate, the First Industrial Robot, HistoryOfInformation. https://www.historyofinformation.com/detail.php?entryid=4071

[2] A. Misiti (2020), A History of Industrial Robots, wevolver. https://www.wevolver.com/article/a-history-of-industrial-robots

[3] Robotics in Healthcare: The Future of Robots in Medicine (2023), Intel. https://www.intel.com/content/www/us/en/healthcare-it/robotics-in-healthcare.html

[4] Gomes, P. (2011). Surgical robotics: Reviewing the past, analysing the present, imagining the future. Robotics and Computer-Integrated Manufacturing, 27(2), 261–266. doi:10.1016/j.rcim.2010.06.009

[5] Simon, P. (2015). Military robotics: Latest trends and spatial grasp solutions. International Journal of Advanced Research in Artificial Intelligence, 4(4). doi:10.14569/ijarai.2015.040402

[6] Khalil, W., & Dombre, E. (2004). Modeling, identification and control of robots. Oxford, England: Butterworth-Heinemann.

[7] Z. Pandilov, V. Dukovski (2014), COMPARISON OF THE CHARACTERISTICS BETWEEN SERIAL AND PARALLEL ROBOTS. Acta Technica Corviniensis Bulletin of Engineering, 7(1)

[8] Dasgupta, B., & Mruthyunjaya, T. S. (2000). The Stewart platform manipulator: a review. Mechanism and Machine Theory, 35(1), 15–40. doi:10.1016/s0094-114x(99)00006-3

[9] Markou, A. A., Elmas, S., & Filz, G. H. (2021). Revisiting Stewart–Gough platform applications: A kinematic pavilion. Engineering Structures, 249(113304), 113304. doi:10.1016/j.engstruct.2021.113304

[10] Wilson, Mike (2015). Implementation of Robot Systems —— Industrial Robots. , (), 19–38. doi:10.1016/B978-0-12-404733-4.00002-3

[11] Saheb, S. H., Babu, G. S., & Raju, N. V. S. (2018). Relative kinematic analysis of serial and parallel manipulators. IOP Conference Series. Materials Science and Engineering, 455, 012040. doi:10.1088/1757-899x/455/1/012040

[12] Jin, Y., Chanal, H., & Paccot, F. (2014). Parallel Robots. Handbook of Manufacturing Engineering and Technology, 2091–2127. doi:10.1007/978-1-4471-4670-4_99

[13] H., K., A.f., K., Sharif, A. M. M., & Zenieh, S. (2012). Parallel, serial and hybrid machine tools and robotics structures: Comparative study on optimum kinematic designs. In Serial and Parallel Robot Manipulators - Kinematics, Dynamics, Control and Optimization. doi:10.5772/33797

[14] Kucuk, S. (Ed.). (2012). Serial and parallel robot manipulators - kinematics, dynamics, control and optimization. doi:10.5772/2301

[15] Siciliano, Bruno; Khatib, Oussama (2008). Springer Handbook of Robotics —— Parallel Mechanisms and Robots. , 10.1007/978-3-540-30301-5(Chapter 13), 269–285. doi:10.1007/978-3-540-30301-5_13

[16] Cheng, H., Liu, F., Li, W., & Hao, L. (2017, July). Vibration measurement, analysis and dynamic parameter optimization for delta robot. 2017 IEEE 7th Annual International Conference on CYBER Technology in Automation, Control, and Intelligent Systems (CYBER). Presented at the 2017 IEEE 7th Annual International Conference on CYBER Technology in Automation, Control, and Intelligent Systems (CYBER), Honolulu, HI. doi:10.1109/cyber.2017.8446106

[17] Kelaiaia, R. (2017). Improving the pose accuracy of the Delta robot in machining operations. The International Journal of Advanced Manufacturing Technology, 91(5–8), 2205–2215. doi:10.1007/s00170-016-9955-8

[18] McClintock, H., Temel, F. Z., Doshi, N., Koh, J.-S., & Wood, R. J. (2018). The milliDelta: A high-bandwidth, high-precision, millimeter-scale Delta robot. Science Robotics, 3(14), eaar3018. doi:10.1126/scirobotics.aar3018

[19] Tho, T. P., & Thinh, N. T. (2014). Analysis of kinematics and dynamics of 4-dof delta parallel robot. In Advances in Intelligent Systems and Computing. Robot Intelligence Technology and Applications 2 (pp. 901–910). doi:10.1007/978-3-319-05582-4_79

[20] Pierrot, F., Nabat, V., O. Company, Krut, S., & Poignet, P. (2009). Optimal design of a 4-DOF parallel manipulator: From academia to industry. IEEE Transactions on Robotics: A Publication of the IEEE Robotics and Automation Society, 25(2), 213–224. doi:10.1109/tro.2008.2011412

[21] O Company, Pierrot, F., Krut, S., & Nabat, V. (2009). Simplified dynamic modelling and improvement of a four-degree-of-freedom pick-and-place manipulator with articulated moving platform. Proceedings of the Institution of Mechanical Engineers. Part I, Journal of Systems & Control Engineering, 223(1), 13–29. doi:10.1243/09596518jsce616

[22] Azmoun, M., Rouhollahi, A., Masouleh, M. T., & Kalhor, A. (2018, October). Kinematics and control of a 4-DOF delta parallel manipulator. 2018 6th RSI International Conference on Robotics and Mechatronics (IcRoM). Presented at the 2018

6th RSI International Conference on Robotics and Mechatronics (IcRoM), Tehran, Iran. doi:10.1109/icrom.2018.8657618

[23] Yang, X., Feng, Z., Liu, C., & Ren, X. (2014, October). A geometric method for kinematics of delta robot and its path tracking control. 2014 14th International Conference on Control, Automation and Systems (ICCAS 2014). Presented at the 2014 14th International Conference on Control, Automation and Systems (ICCAS), Gyeonggi-do, South Korea. doi:10.1109/iccas.2014.6988043

[24] Delta robot kinematics (2009), HyperTriangle. https://hypertriangle.com/ alex/delta-robot-tutorial/

[25] Hadfield, H., Wei, L., & Lasenby, J. (2020). The forward and inverse kinematics of a delta robot. In Lecture Notes in Computer Science. Advances in Computer Graphics (pp. 447–458). doi:10.1007/978-3-030-61864-3_38

[26] Prempraneerach, P. (2014, July). Delta parallel robot workspace and dynamic trajectory tracking of delta parallel robot. 2014 International Computer Science and Engineering Conference (ICSEC). Presented at the 2014 International Computer Science and Engineering Conference (ICSEC), Khon Kaen, Thailand. doi:10.1109/icsec.2014.6978242

[27] Jun-lin, M., Ying, L., Ying-kun, Z., & Cunming, H. (2022). Design of 3DOF Delta parallel capture robot with high speed and light weight. Journal of Physics. Conference Series, 2188(1), 012008. doi:10.1088/1742-6596/2188/1/012008

[28] Alashqar, E. H. A. (2013). Modeling and high precision motion control of 3 DOF Parallel Delta Robot Manipulator (Doctoral dissertation, The Islamic University of Gaza).

[29] Abed Azad, F., Ansari Rad, S., Hairi Yazdi, M. R., Tale Masouleh, M., & Kalhor, A. (2022). Dynamics analysis, offline–online tuning and identification of base inertia parameters for the 3-DOF Delta parallel robot under insufficient excitations. Meccanica, 57(2), 473–506. doi:10.1007/s11012-021-01464-7

[30] Pierrot, F., Reynaud, C., & Fournier, A. (1990). DELTA: a simple and efficient parallel robot. Robotica, 8(2), 105–109. doi:10.1017/s0263574700007669

[31] Merlet, J.-P. (2012). Parallel robots (2000th ed.) [PDF]. doi:10.1007/978-94-010-9587-7

[32] Clément M. Gosselin; Jean-Pierre Merlet (1994). The direct kinematics of planar parallel manipulators: Special architectures and number of solutions. , 29(8), 1083–1097. doi:10.1016/0094-114x(94)90001-9

[33] Liu, C., Cao, G., & Qu, Y. (2019). Safety analysis via forward kinematics of delta parallel robot using machine learning. Safety Science, 117, 243–249. doi:10.1016/j.ssci.2019.04.013

[34] Williams, R. L. (2016). The delta parallel robot: kinematics solutions. Mechanical Engineering, Ohio University, 1-15.

[35] Zsombor-Murray, P.J. (2004). Descriptive Geometric Kinematic Analysis of Clavel's "Delta" Robot.

[36] Gharahsofloo, A., & Rahmani, A. (2015). An efficient algorithm for workspace generation of delta robot.

[37] Stock, M., & Miller, K. (2003). Optimal kinematic design of spatial parallel manipulators: Application to Linear Delta robot. Journal of Mechanical Design (New York, N.Y.: 1990), 125(2), 292–301. doi:10.1115/1.1563632

[38] Zhou, Y., Niu, J., Liu, Z., & Zhang, F. (2017). A novel numerical approach for workspace determination of parallel mechanisms. Journal of Mechanical Science and Technology, 31(6), 3005–3015. doi:10.1007/s12206-017-0544-z

[39] Bentaleb, T., Hammache, H., & El Amine, B. M. (2011, March). Workspace, Accuracy Analysis and Kinematic Calibration of a" Delta" Parallel Robots. In Proceedings of the International Conference on Electronics & Oil: From theory to applications (ICEO'11) (pp. 290-295).

[40] Prempraneerach, P. (2014, July). Delta parallel robot workspace and dynamic trajectory tracking of delta parallel robot. 2014 International Computer Science and Engineering Conference (ICSEC).

[41] Gosselin, C., & Angeles, J. (1990). Singularity analysis of closed-loop kinematic chains. IEEE Transactions on Robotics and Automation: A Publication of the IEEE Robotics and Automation Society, 6(3), 281–290. doi:10.1109/70.56660

[42] Dudici, L. C., & Simionescu, I. (2015). On the singularities of DELTA parallel robots. Applied Mechanics and Materials, 762, 125–130. doi:10.4028/www.scientific.net/amm.762.125

[43] López, M., Castillo, E., García, G., & Bashir, A. (2006). Delta robot: Inverse, direct, and intermediate Jacobians. Proceedings of the Institution of Mechanical Engineers, Part C: Journal of Mechanical Engineering Science, 220(1), 103–109. doi:10.1243/095440606x78263

[44] Di Gregorio, R. (2004). Determination of singularities in delta-like manipulators. The International Journal of Robotics Research, 23(1), 89–96. doi:10.1177/0278364904039689