Mechanical Engineering • FIU • Class of 2028

Christopher Gonzales

Mechanical engineer focused on design, testing, controls, and manufacturing systems.

Resume | LinkedIn | GitHub | Poggit | Email

Designing reliable systems from CAD to controls.

Mechanical Engineering student at Florida International University with hands-on experience in thermal management, multidisciplinary systems integration, and technical project delivery. Focused on design and manufacturing with a strong software mindset.
Currently applying for internships in automotive, aerospace, and industrial engineering roles where testing, reliability, and design execution are mission critical.

View Projects | **View Code** | **Hire Me**

Christopher Gonzales

3.38
GPA

50+
Engineers Collaborated

5+
Professional Reports

15+

SolidWorks UAV Parts

[redacted]

PROFILE

About Me

I enjoy solving practical engineering problems where mechanical design, controls, and data come together. My experience includes thermal analysis research, autonomous vehicle development, drone component design, and technical documentation for NASA-aligned projects. I am currently seeking internships in automotive systems, manufacturing, reliability engineering, aerospace development, and product design.

TECHNICAL STACK

Skills

Engineering

- SolidWorks (CSWA/P), Siemens NX, AutoCAD
- MATLAB, Thermal Analysis, IR Thermography
- Mechanical and electrical system integration

Programming & Controls

- Python, Java, PHP, JavaScript
- GitHub version control workflows
- Embedded systems and control logic familiarity

Productivity & Communication

- Advanced Microsoft Excel, PowerPoint, Word
- Bilingual fluency in English and Spanish
- Technical documentation and rapid system onboarding

PROFESSIONAL EXPERIENCE

Experience

IEEE Electronics Packaging Society Fellowship

Mechanical Engineering Research • Miami, FL • Sep 2025 – Jan 2026

- Optimized thermal management of electronic components using high-resolution infrared profiling to identify hotspot formation.
- Validated heat dissipation models through controlled lab experiments and documented findings for a team of 5 engineers.

NASA L’Space Mission Concept Academy

Systems Engineering Lead • Miami, FL • Aug 2025 – Dec 2025

- Authored 50+ pages of technical documentation and design review content, enabling project approval and defining the mission roadmap.
- Coordinated mechanical, electrical, and software interface integration, reducing subsystem conflicts across the team.

Skyline Space Internship

Mechanical Engineering Intern (UAV & Drones) • Coimbatore, India • Aug 2025 – Oct 2025

- Modeled 15+ custom UAV chassis components in SolidWorks for precise fitment of rotors, sensors, and flight controllers.
- Collaborated with an international team of 100+ engineers to synchronize design updates and troubleshoot integration issues.

Presidente Supermarket

Inventory & Merchandise Lead • Miami, FL • Jun 2021 – Present

- Managed logistics for 200+ product lines to maintain full stock availability and efficient shelf organization.
- Reduced transaction errors by 10% by auditing pricing and improving merchandise sorting workflows.

PORTFOLIO WORK

Mechanical Design Projects

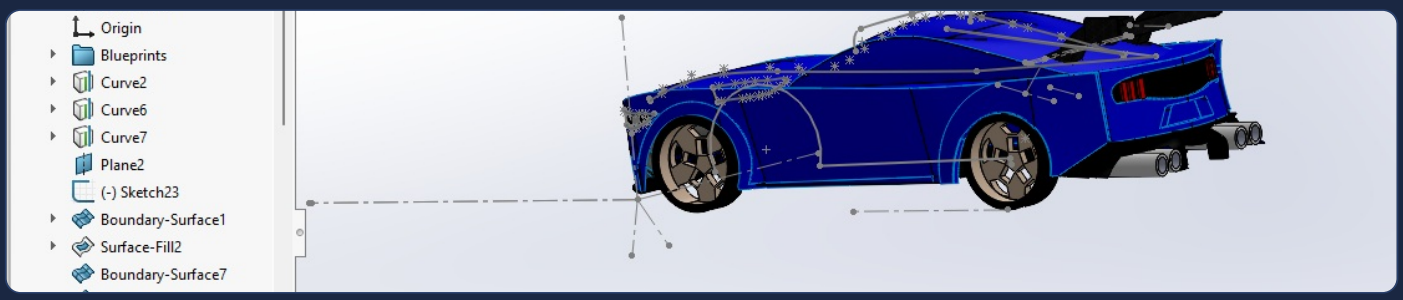

ASME 2026 XRC Autonomous Ford Mustang GTD

Lead Developer & Designer • Feb 2026 – Present

Designed a scale Ford Mustang GTD in SolidWorks and programmed drivetrain and steering control logic for high-speed stability and precision handling.

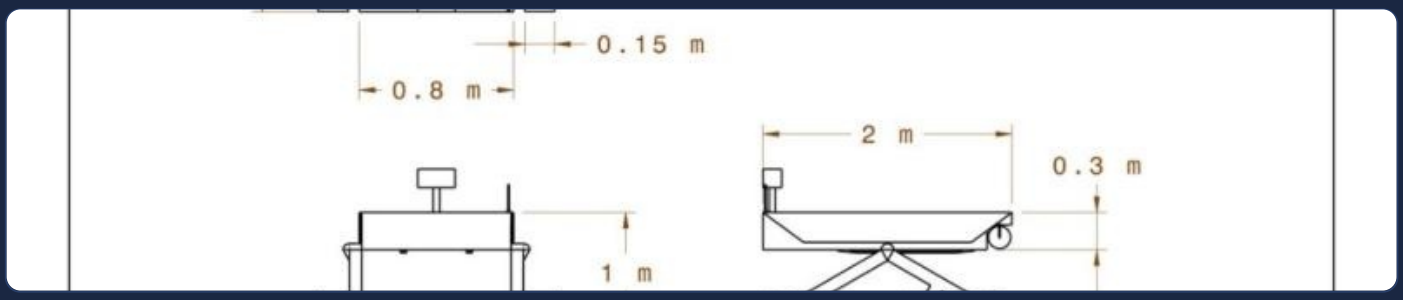

STRATA Mars Rover Mission Concept

NASA Professional Workforce Preparation • Aug 2025 – Dec 2025

Performed mission feasibility analysis and CAD architecture design while optimizing component placement for subsystem performance and integration.

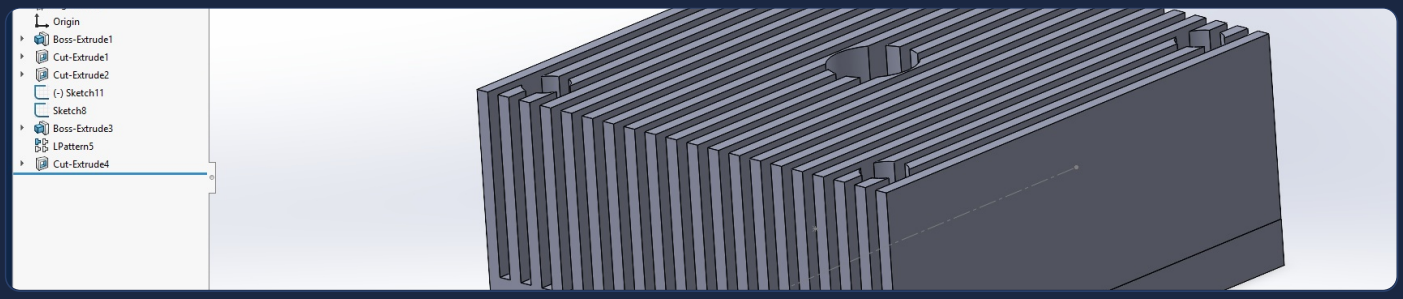

Thermal Research Validation

IEEE Electronics Packaging Society Fellowship

Used high-resolution thermal profiles and lab verification to improve heat dissipation strategy and reduce hotspot risk.

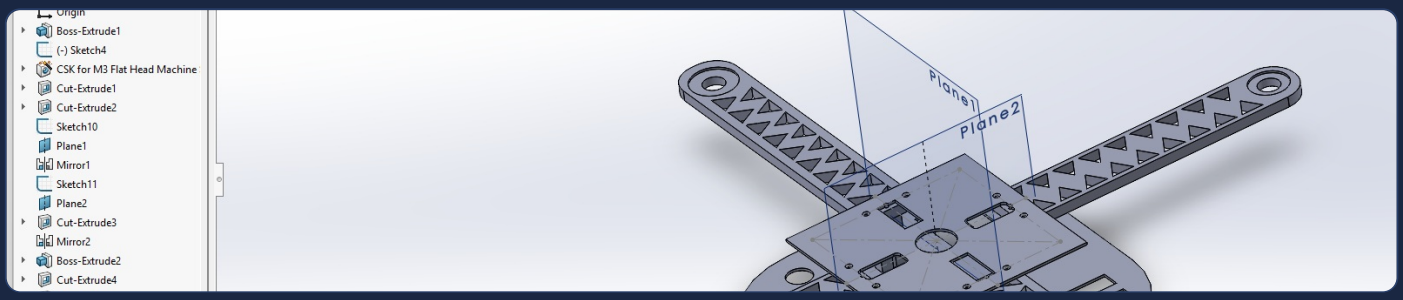

UAV Drone Part Design

SolidWorks Component Development

Designed and refined a drone structural part in SolidWorks, focusing on fitment, weight balance, and reliable integration with the airframe assembly.

SOFTWARE WORK

Code Projects

```
use pocketmine\network\mcpe\protocol\types\entity\EntityLink;
use pocketmine\network\mcpe\protocol\types\entity\LongMetadataProperty;
use pocketmine\network\mcpe\protocol\types\entity\EntityMetadataProperties;
use pocketmine\network\mcpe\protocol\types\entity\EntityMetadataFlags;
use pocketmine\network\mcpe\protocol\types\entity\PropertySyncData;
use pocketmine\entity\Entity;

class SeatData {

    private Player $player;
```

WC Server

Founder & Lead Developer • Sep 2025 – Present

Built a high-traffic server supporting 100+ concurrent players using PHP custom plugins and latency optimization to maintain 99.9% uptime.

GitHub Poggit

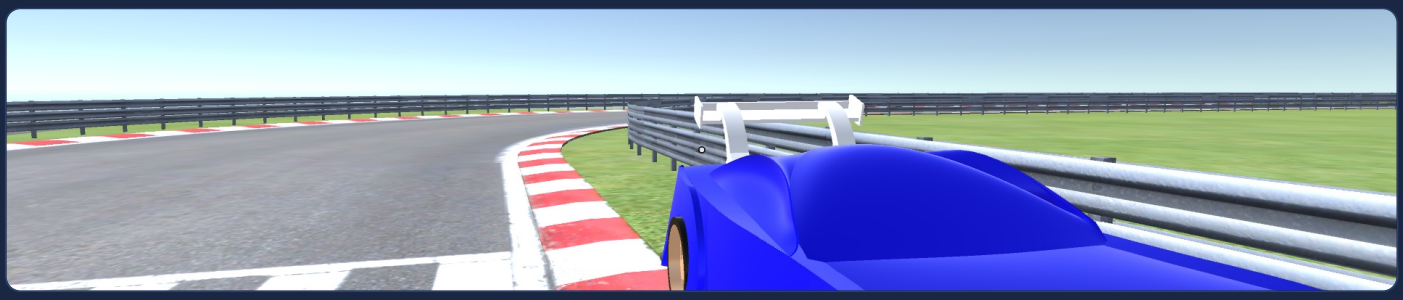

Mustang Build Code

Vehicle Control and Software Integration

Developed and tested logic flows for automation-style control behavior, integrating software decision making with mechanical system requirements.

GitHub

TEAM LEADERSHIP

Leadership & Activities

Engineering Research Society Engineer – Technical Coordinator

Florida International University • Aug 2025 – Present

- Coordinated technical workshops for 100+ students and supported certification program logistics and funding.
- Partnered with executive leadership to secure resources for recurring engineering development seminars.

Panther Motorsports (Formula SAE) – Mechanical Design Engineer

Florida International University • Sep 2025 – Present

- Analyzed vehicle test data and proposed mechanical improvements for handling and efficiency within a 50+ member team.
- Developed high-fidelity SolidWorks sub-assembly models while maintaining strict clearance tolerances and chassis integration requirements.

ACADEMIC FOUNDATION

Education

Florida International University, Miami, FL

Bachelor of Science in Mechanical Engineering • GPA: 3.38 • Expected Graduation: May 2028

Concentrations: Design and Manufacturing
Related Coursework: SolidWorks 3D Modeling, Discrete Mathematics, Programming for Systems, Data Analysis, Circuits
Honors: High Honors, King Solomon Award Winner, Dean’s List, 2025 HSF Scholar

LET'S CONNECT

Contact

Email: cgonz766@fiu.edu

LinkedIn: linkedin.com/in/christopher-g17

GitHub: github.com/PDevChris

Poggit: poggit.pmmp.io

Languages: English and Spanish

© 2026 Christopher Gonzales • Mechanical Engineering Portfolio