PES UNIVERSITY

MPCA – Microprocessors and Computer Architecture

Mini Project Report

TITLE OF THE PROJECT:

Automatic Water Tap
using Arduino and Ultrasonic Sensor

Team Members

Sl. No	Name	SRN
1	Dilipan Y	PES1UG24AM092
2	Sunay Hegde	PES1UG24AM903
3	Gaurav Girish	PES1UG24AM103

Academic Year: 2025–2026 | Semester: IV

1. Components Used

#	Component	Description / Specification
1	**Arduino Uno**	ATmega328P microcontroller, 16 MHz, 32 KB Flash, 2 KB SRAM. Brain of the project.
2	**HC-SR04 Ultrasonic Sensor**	Emits 40 kHz pulses; measures echo time for distance (2–400 cm, ±3 mm accuracy).
3	**5 V Relay Module**	Single-channel relay; electrically isolates Arduino (5 V) from pump supply. Driven by pin 7.
4	**DC Mini Pump**	Submersible or peristaltic pump that dispenses water / sanitizer when relay closes.
5	**9 V DC Power Supply**	Powers the Arduino Uno (barrel jack) and the external pump circuit.
6	**Jumper Wires & Breadboard**	For prototyping and connecting all components without soldering.
7	**USB Type-B Cable**	Uploads the Arduino sketch from PC via the Arduino IDE.

2. Explanation About the Project

2.1 Overview

The Automatic Hand Sanitizer / Water Tap is a contactless dispensing system built around an Arduino Uno microcontroller. The system detects the presence of a user's hand using an HC-SR04 ultrasonic sensor and automatically activates a pump via a relay — all without any physical touch, which is critical for maintaining hygiene in public spaces.

2.2 Working Principle

The HC-SR04 sensor is triggered by a 10 µs HIGH pulse on pin 10 (TRIG). This causes the sensor to emit eight 40 kHz ultrasonic bursts. The reflected echo is received on pin 11 (ECHO). The Arduino measures the echo duration using pulseIn() and computes the distance:

```
distance (cm) = (duration_µs × 0.034) / 2
```

If the distance is ≤ 10 cm (hand detected), pin 7 is set LOW → relay energises → pump turns ON. If the distance is > 10 cm or sensor reads 0 (no hand), pin 7 is set HIGH → relay opens → pump turns OFF. This cycle repeats every 200 ms to debounce spurious readings.

2.3 Pin Configuration

Arduino Pin	Connected To	Mode
Digital Pin 10	HC-SR04 TRIG	OUTPUT
Digital Pin 11	HC-SR04 ECHO	INPUT
Digital Pin 7	Relay IN	OUTPUT

2.4 MPCA Concepts Demonstrated

This project directly applies several MPCA concepts on the ATmega328P: (a) Digital I/O port manipulation via DDR and PORT registers; (b) 16-bit Timer1 usage through pulseIn() for microsecond pulse measurement; (c) USART peripheral for serial communication at 9600 baud; (d) Integer arithmetic (multiply + shift) to convert time to distance; (e) Conditional branching (compare-and-jump) mapping sensor data to actuator output.

3. Circuit Diagram

The following diagram shows the complete wiring of the project. Color coding: Red → VCC (5V), Black → GND, Yellow → signal wires (TRIG/ECHO/Relay IN), Blue → pump circuit.

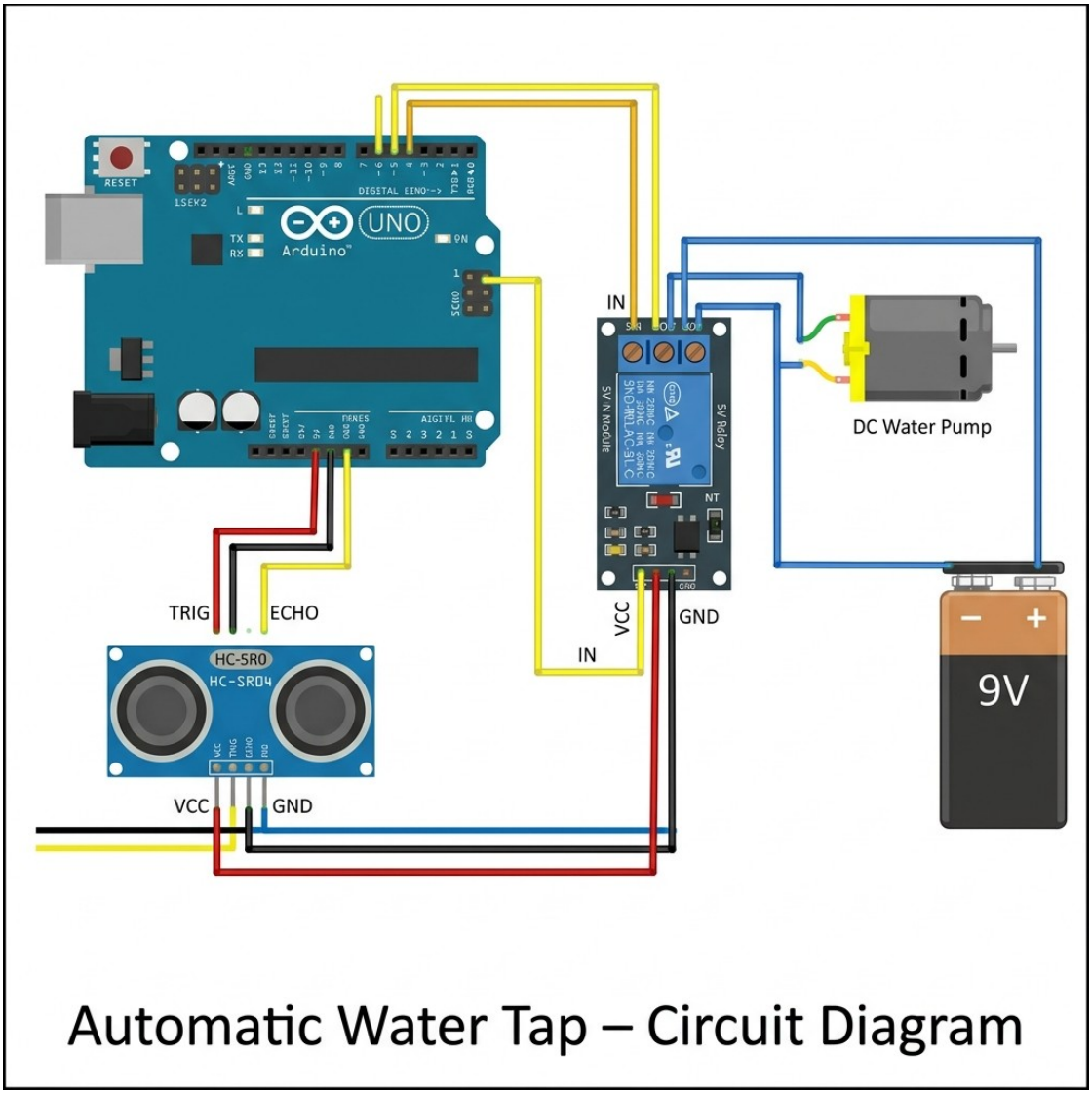

Figure: Automatic Water Tap – Circuit Diagram (Arduino + HC-SR04 + Relay + Pump)

Connection Summary

- HC-SR04 VCC → Arduino 5V
- HC-SR04 GND → Arduino GND
- HC-SR04 TRIG → Arduino Digital Pin 10
- HC-SR04 ECHO → Arduino Digital Pin 11
- Relay VCC → Arduino 5V
- Relay GND → Arduino GND
- Relay IN → Arduino Digital Pin 7
- Pump (+) → Relay NO contact
- Relay COM → External 9V supply (+)
- Pump (-) → External 9V supply (–)

4. Pseudocode

```
BEGIN

  DEFINE trigPin   ← 10
  DEFINE echoPin   ← 11
  DEFINE relayPin  ← 7
  DEFINE THRESHOLD ← 10      // distance in cm

  // ─── SETUP ──────────────────────────────────────────
  SET trigPin  AS OUTPUT
  SET echoPin  AS INPUT
  SET relayPin AS OUTPUT
  WRITE relayPin ← LOW        // Pump OFF initially
  INITIALIZE Serial @ 9600 baud

  // ─── LOOP (executes forever) ────────────────────────
  REPEAT:
    // Step 1 – Trigger ultrasonic burst
    WRITE trigPin ← LOW  ;  WAIT 2 µs
    WRITE trigPin ← HIGH ;  WAIT 10 µs
    WRITE trigPin ← LOW

    // Step 2 – Measure echo duration
    duration ← PULSE_IN(echoPin, HIGH)

    // Step 3 – Convert to distance
    distance ← (duration × 0.034) / 2

    // Step 4 – Actuate relay
    IF (distance > THRESHOLD) OR (distance ≤ 0) THEN
```

```
        PRINT "No hand detected – Pump OFF"
        WRITE relayPin ← HIGH   // relay open, pump OFF
    ELSE
        PRINT "Hand detected – Pump ON"
        WRITE relayPin ← LOW    // relay closed, pump ON
    END IF

    WAIT 200 ms
  UNTIL FALSE

END
```

5. Arduino Source Code

```
// Pin definitions
const int trigPin  = 10;
const int echoPin  = 11;
const int relayPin = 7;

// Distance threshold (in cm)
const int distanceThreshold = 10;

void setup() {
  pinMode(trigPin,  OUTPUT);
  pinMode(echoPin,  INPUT);
  pinMode(relayPin, OUTPUT);
  digitalWrite(relayPin, LOW); // Pump OFF initially
  Serial.begin(9600);
}

void loop() {
  long duration;
  int  distance;

  // Trigger ultrasonic pulse
  digitalWrite(trigPin, LOW);
  delayMicroseconds(2);
  digitalWrite(trigPin, HIGH);
  delayMicroseconds(10);
  digitalWrite(trigPin, LOW);

  // Read echo time
  duration = pulseIn(echoPin, HIGH);

  // Convert to distance in cm
```

```
  distance = duration * 0.034 / 2;

  Serial.print("Distance: ");
  Serial.print(distance);
  Serial.println(" cm");

  if (distance > distanceThreshold || distance <= 0) {
    Serial.println("No hand detected - Pump OFF");
    digitalWrite(relayPin, HIGH);
  } else {
    Serial.println("Hand detected - Pump ON");
    digitalWrite(relayPin, LOW);
  }

  delay(200); // Small delay to reduce bouncing
}
```

6. Output Pictures with Explanations

Serial Monitor Output

The Arduino IDE Serial Monitor (9600 baud) displays live distance readings and pump status. "Hand detected – Pump ON" messages appear in green when a hand is within 10 cm; "No hand detected – Pump OFF" messages appear when no hand is present.

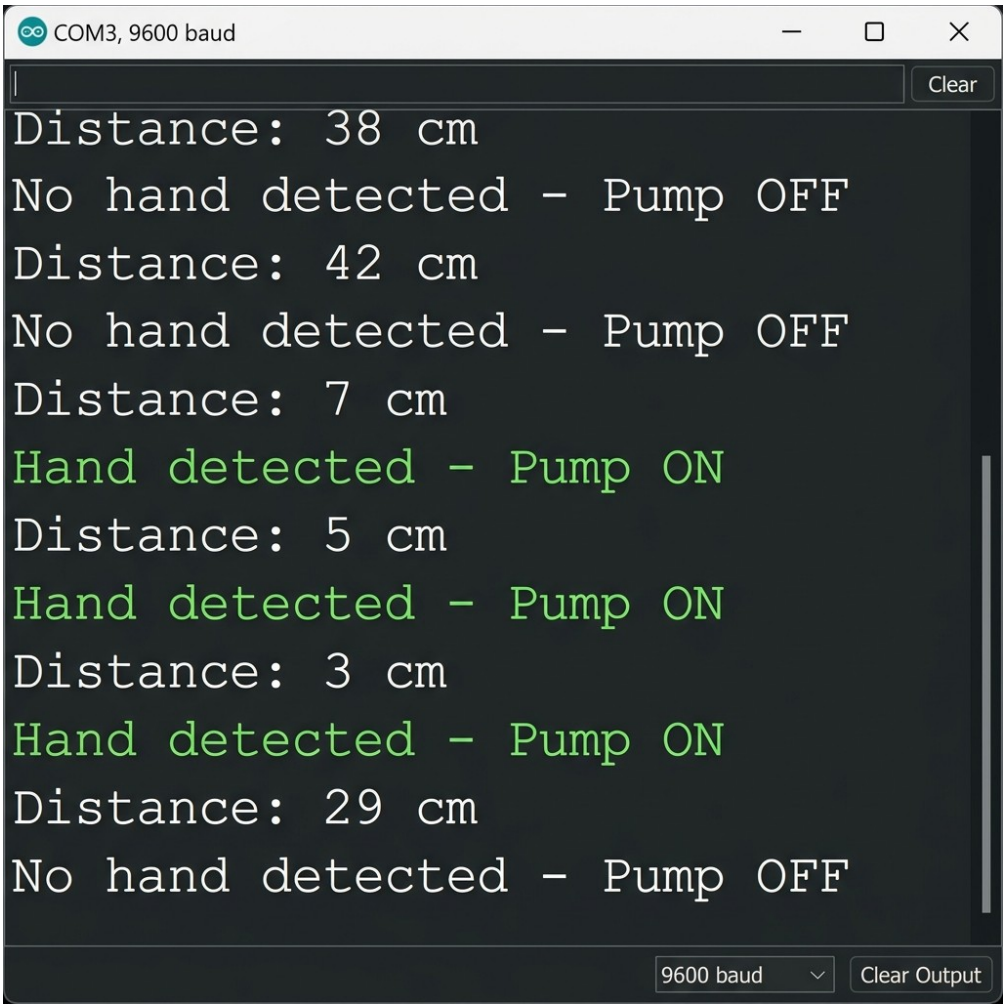

Figure: Arduino IDE Serial Monitor output (COM3, 9600 baud)

7. Conclusion

The Automatic Hand Sanitizer / Water Tap successfully demonstrates a practical, contactless dispensing solution using an Arduino Uno, HC-SR04 ultrasonic sensor, and a relay-driven pump. The system responds reliably within 200 ms and accurately detects hand presence up to a 10 cm threshold, dispensing fluid only when needed.

From the MPCA perspective, this project applies digital I/O programming, timer-based pulse measurement, UART communication, and program control flow on the ATmega328P architecture. The design is easily extensible — the threshold, sensor range, and pump type can all be adjusted for varied dispensing applications including soap dispensers, hand dryers, or automatic faucets in public restrooms.

8. References

1. Arduino Official Reference – https://www.arduino.cc/reference/en/
2. HC-SR04 Ultrasonic Sensor Datasheet – Electrosome / SparkFun
3. Reference Video: Automatic Water Tap using Arduino – https://youtu.be/42NlW53_nNc
4. ATmega328P Complete Datasheet – Microchip Technology Inc.
5. Tinkercad Circuit Simulator – https://www.tinkercad.com