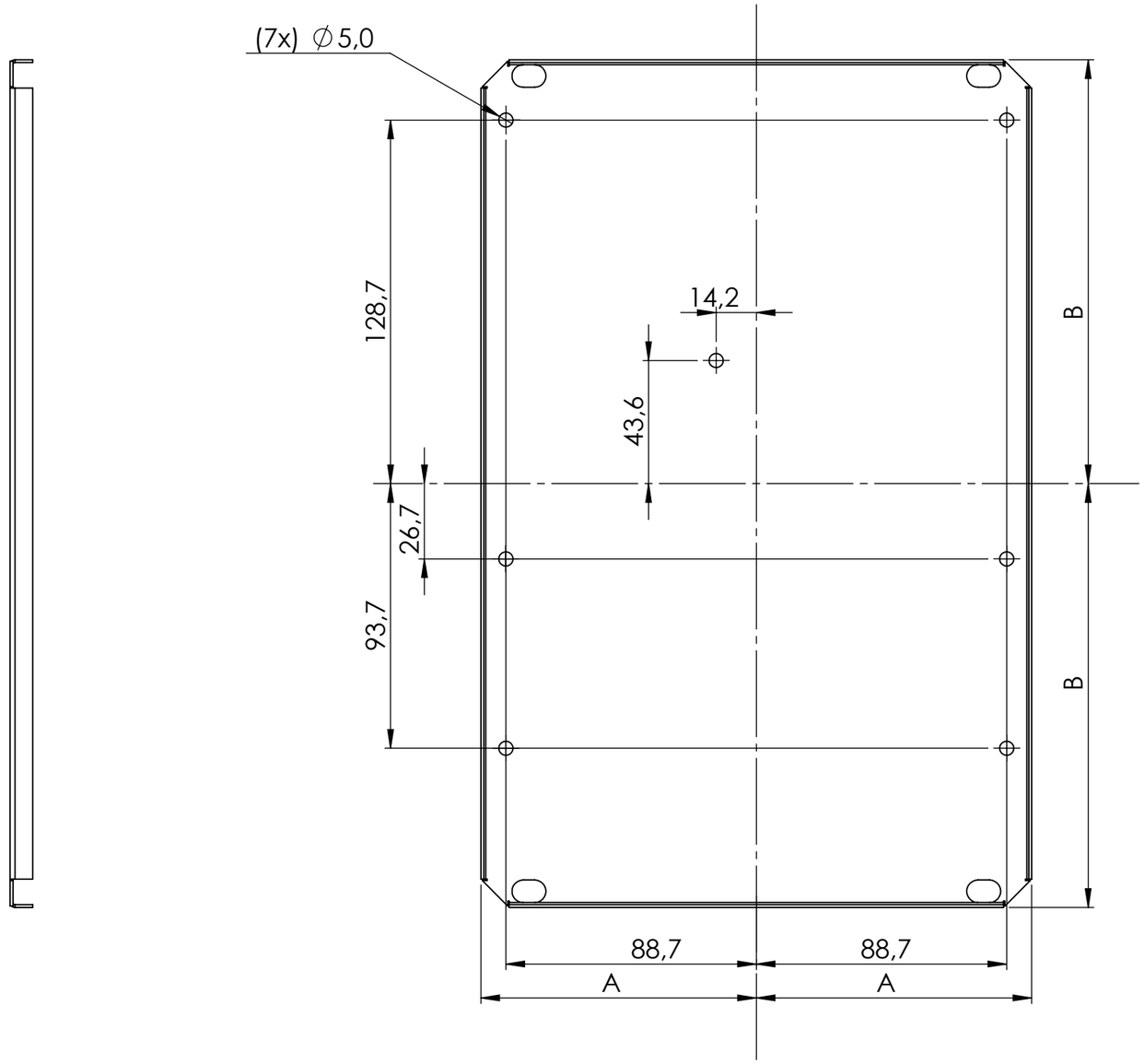

While outer dimensions of backplate have not been measured precisely, midpoints are only noted down as equal lengths.

UNLESS OTHERWISE SPECIFIED: DIMENSIONS ARE IN MILLIMETERS SURFACE FINISH: TOLERANCES: LINEAR: ANGULAR:	FINISH:			DEBURR AND BREAK SHARP EDGES	DO NOT SCALE DRAWING	REVISION
	NAME	SIGNATURE	DATE		TITLE: Enclosure_backplate with drilled holes	
DRAWN						
CHK'D						
APPV'D						
MFG						
Q.A				MATERIAL:	DWG NO. Enclosure_Backplate	A3
				WEIGHT:	SCALE:1:2	SHEET 1 OF 1