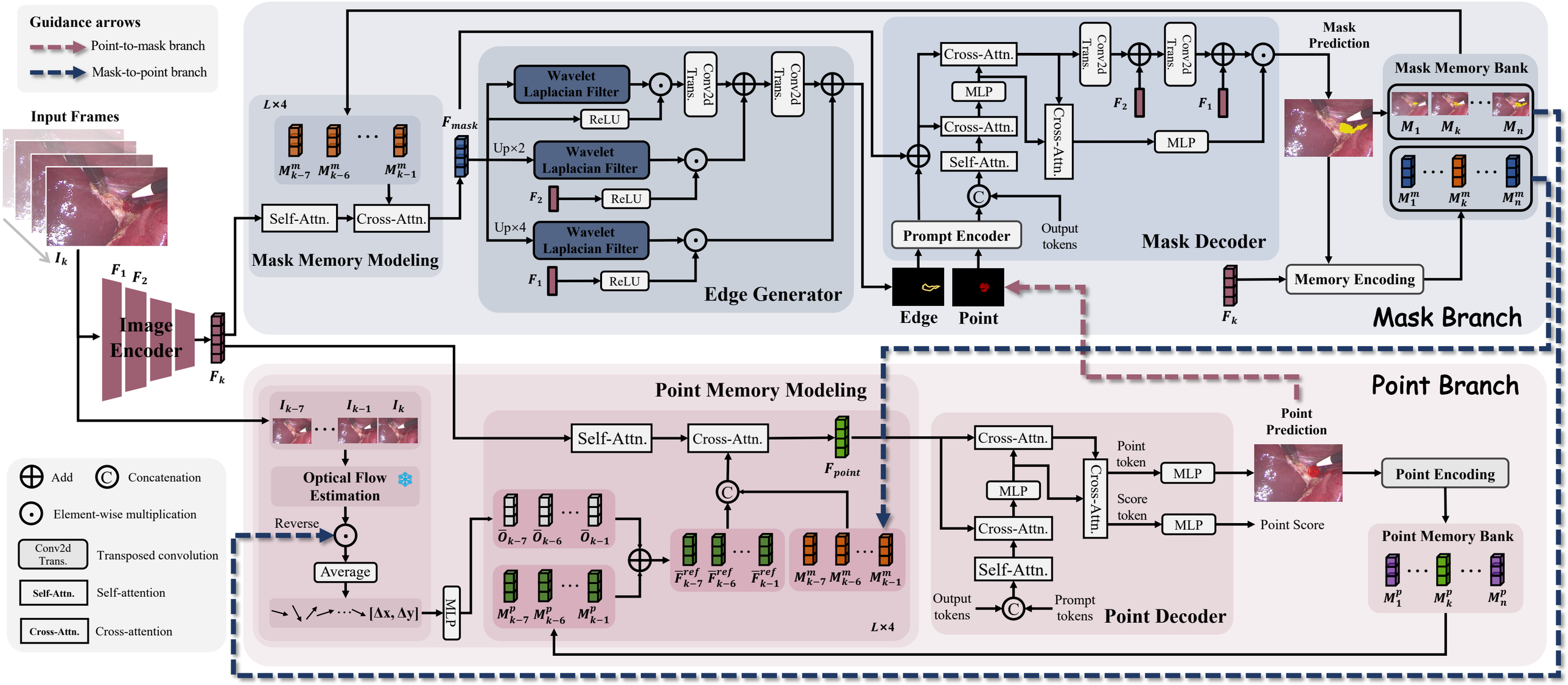
Guidance arrows
Point-to-mask branch
Mask-to-point branch
Input Frames
$I_k$
Image Encoder
$F_1$ $F_2$
$F_k$
L×4
$M^m_{k-7}$ $M^m_{k-6}$ $M^m_{k-1}$
Self-Attn.
Cross-Attn.
Mask Memory Modeling
$F_{mask}$
Wavelet Laplacian Filter
ReLU
Conv2d Trans.
Up×2
Up×4
$F_2$
$F_1$
Edge Generator
Cross-Attn.
MLP
Self-Attn.
Prompt Encoder
Output tokens
Mask Decoder
Mask Prediction
Mask Memory Bank
$M_1$ $M_k$ $M_n$
$M^m_1$ $M^m_k$ $M^m_n$
Memory Encoding
Edge
Point
Mask Branch
Point Memory Modeling
$I_{k-7}$ $I_{k-1}$ $I_k$
Optical Flow Estimation
Reverse
Average
[Δx, Δy]
$\bar{O}_{k-7}$ $\bar{O}_{k-6}$ $\bar{O}_{k-1}$
$M^p_{k-7}$ $M^p_{k-6}$ $M^p_{k-1}$
$\bar{F}^{ref}_{k-7}$ $\bar{F}^{ref}_{k-6}$ $\bar{F}^{ref}_{k-1}$
$M^m_{k-7}$ $M^m_{k-6}$ $M^m_{k-1}$
$F_{point}$
Point Branch
Point Prediction
Point token
Score token
Point Score
Point Encoding
Point Memory Bank
$M^p_1$ $M^p_k$ $M^p_n$
Output tokens
Prompt tokens
Point Decoder
Add
Concatenation
Element-wise multiplication
Transposed convolution
Self-attention
Cross-attention