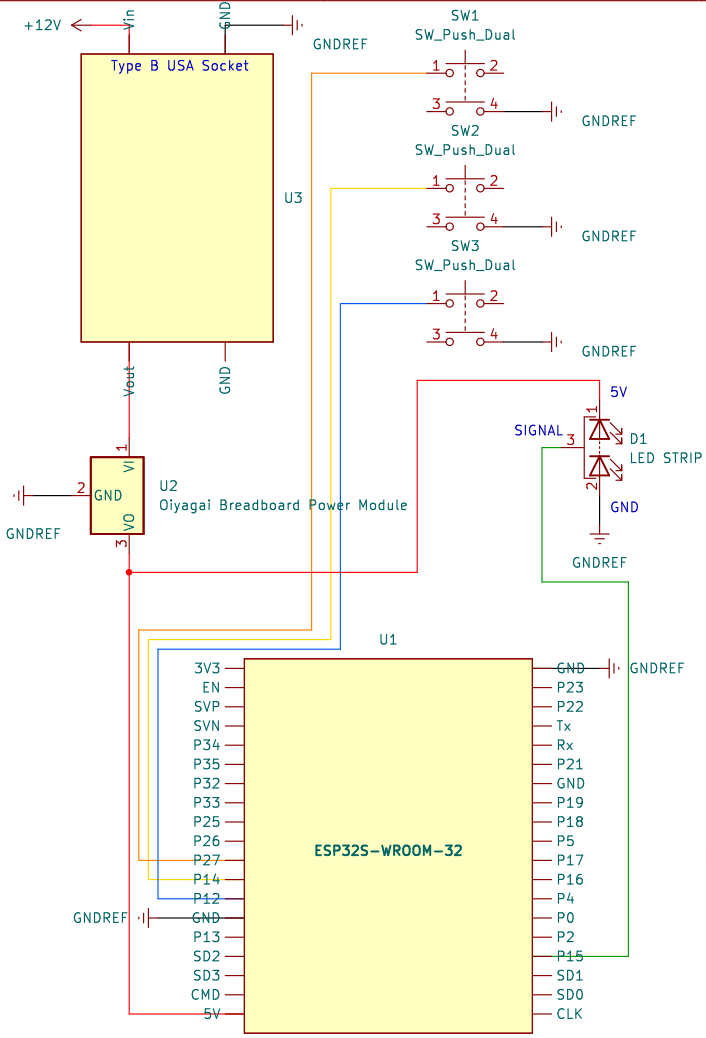

Circuit for ESP32S

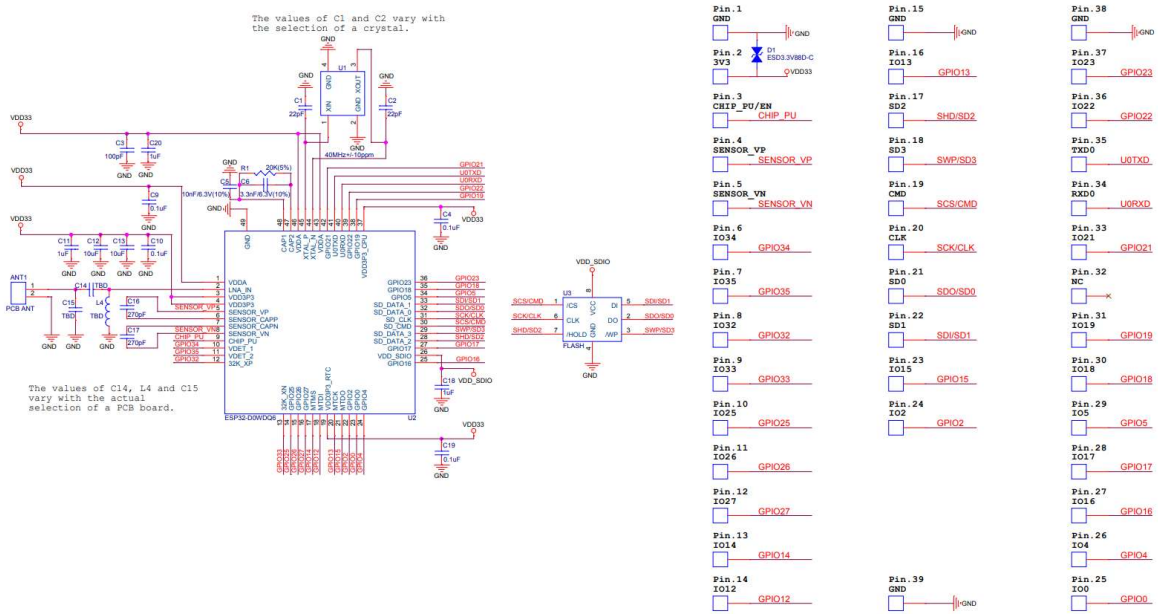

Dylan St Laurent
Jorge Suarez

Sheet: /
File: LED_Device.kicad_sch

Title: ESP32S Based LED Controller

Size: USLetter	Date: 2023-12-17	Rev: 1
KiCad E.D.A. eeschema 7.0.7		Id: 1/1