Operating Systems
(Honor Track)

Memory 1: Address Translation and Virtual Memory

Xin Jin

Spring 2025

Acknowledgments: Ion Stoica, Berkeley CS 162

Virtualizing Resources

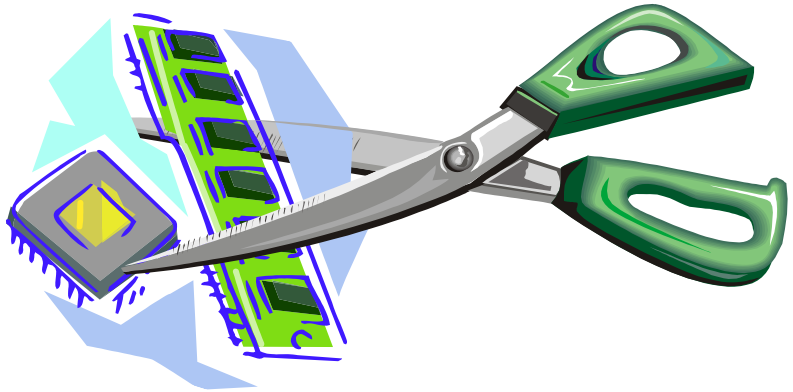

- Physical Reality:
  Different Processes/Threads share the same hardware
  - Need to multiplex CPU (just finished: scheduling)
  - Need to multiplex use of memory (starting today)
  - Need to multiplex disk and devices (later in term)
- Why worry about memory sharing?
  - The complete working state of a process and/or kernel is defined by its data in memory (and registers)
  - Consequently, cannot just let different threads of control use the same memory
    - » Physics: two different pieces of data cannot occupy the same locations in memory
  - Probably don't want different threads to even have access to each other's memory if in different processes (protection)

Recall: Four Fundamental OS Concepts

- **Thread: Execution Context**
  - Fully describes program state
  - Program Counter, Registers, Execution Flags, Stack
- **Address space** (with or w/o **translation**)
  - Set of memory addresses accessible to program (for read or write)
  - May be distinct from memory space of the physical machine (in which case programs operate in a virtual address space)
- **Process: an instance of a running program**
  - Protected Address Space + One or more Threads
- **Dual mode operation / Protection**
  - Only the "system" has the ability to access certain resources
  - Combined with translation, isolates programs from each other and the OS from programs

THE BASICS: Address/Address Space

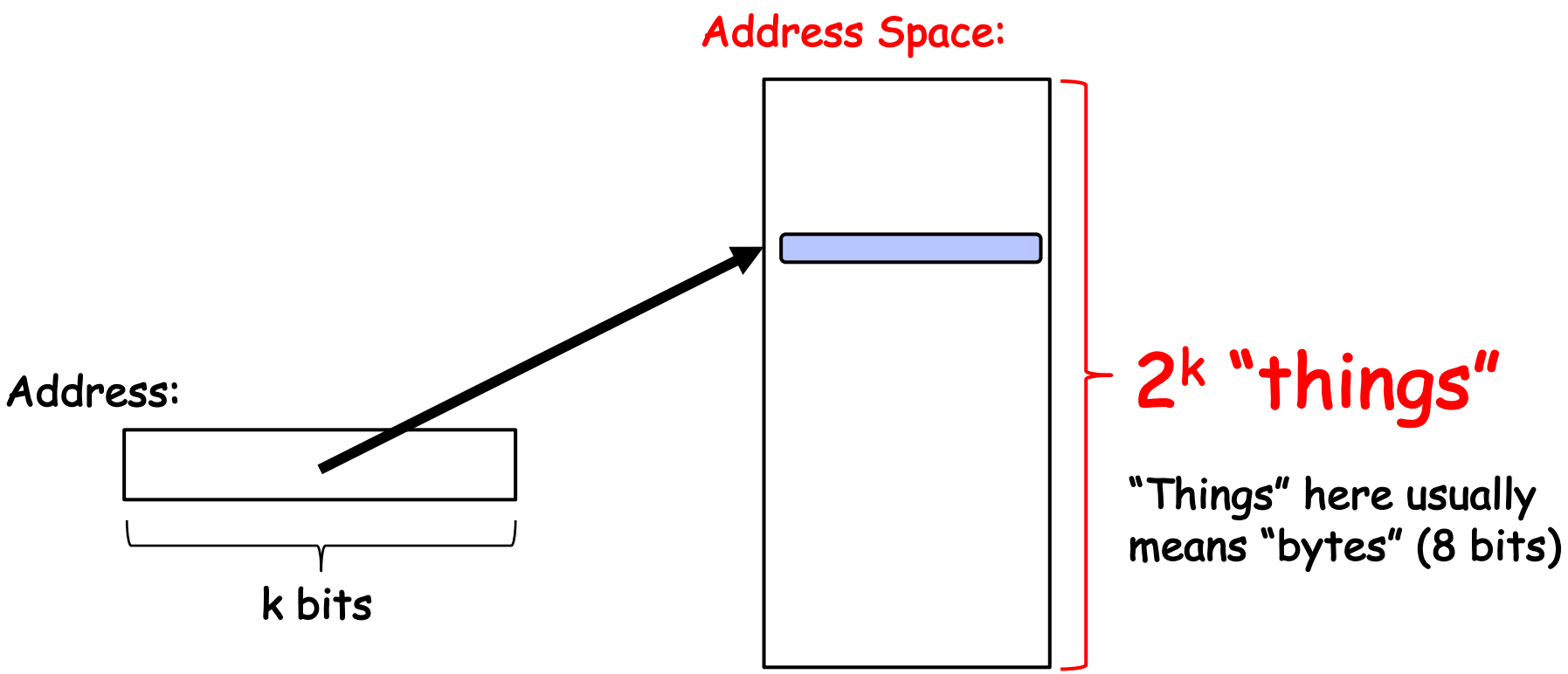

- What is 2^{10} bytes (where a byte is abbreviated as "B")?
  - 2^{10} B = 1024B = 1 KB (for memory, 1K = 1024, *not* 1000)
- How many bits to address each byte of 4KB page?
  - 4KB = 4×1KB = 4× 2^{10}= 2^{12}⇒ 12 bits
- How much memory can be addressed with 20 bits? 32 bits? 64 bits?
  - Use 2^k

Process Virtual Address Space

- Definition: **Set of accessible addresses and the state associated with them**
  - 2^{32} = ~4 billion ***bytes*** on a 32-bit machine
- How many 32-bit numbers fit in this address space?
  - 32-bits = 4 bytes, so $2^{32}/4 = 2^{30}$=~1billion
- What happens when processor reads or writes to an address?
  - Perhaps acts like regular memory
  - Perhaps causes I/O operation
    - » (Memory-mapped I/O)
  - Causes program to abort (segfault)?
  - Communicate with another program
  - …

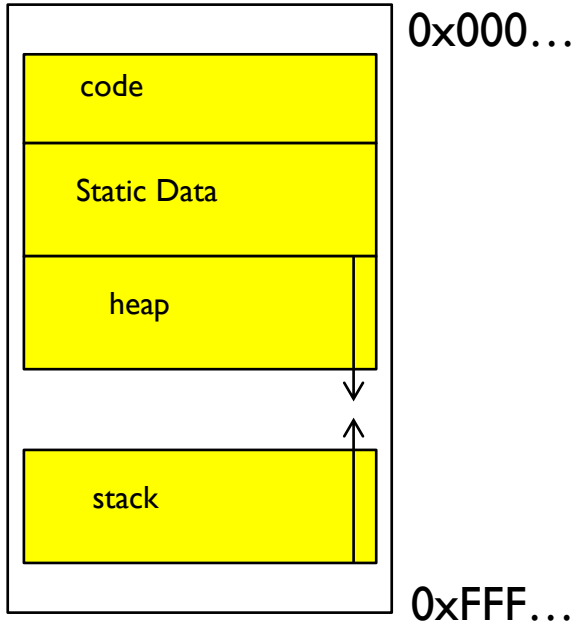

Important Aspects of Memory Multiplexing

- Protection:
  - Prevent access to private memory of other processes
    - » Different pages of memory can be given special behavior (Read Only, Invisible to user programs, etc.)
    - » Kernel data protected from User programs
    - » Programs protected from themselves
- Translation:
  - Ability to translate accesses from one address space (virtual) to a different one (physical)
  - When translation exists, processor uses virtual addresses, physical memory uses physical addresses
  - Side effects:
    - » Can be used to avoid overlap
    - » Can be used to give uniform view of memory to programs
- Controlled overlap:
  - Separate state of threads should not collide in physical memory. Obviously, unexpected overlap causes chaos!
  - Conversely, would like the ability to overlap when desired (for communication)

Alternative View: Interposing on Process Behavior

- OS interposes on process' I/O operations
  - How? All I/O happens via syscalls.

- OS interposes on process' CPU usage
  - How? Interrupt lets OS preempt current thread

- **Question: How can the OS interpose on process' memory accesses?**
  - Too slow for the OS to interpose *every* memory access
  - Translation: hardware support to accelerate the common case
  - Page fault: uncommon cases trap to the OS to handle

Recall: Uniprogramming

- Uniprogramming (no Translation or Protection)
  - Application always runs at same place in physical memory since only one application at a time
  - Application can access any physical address

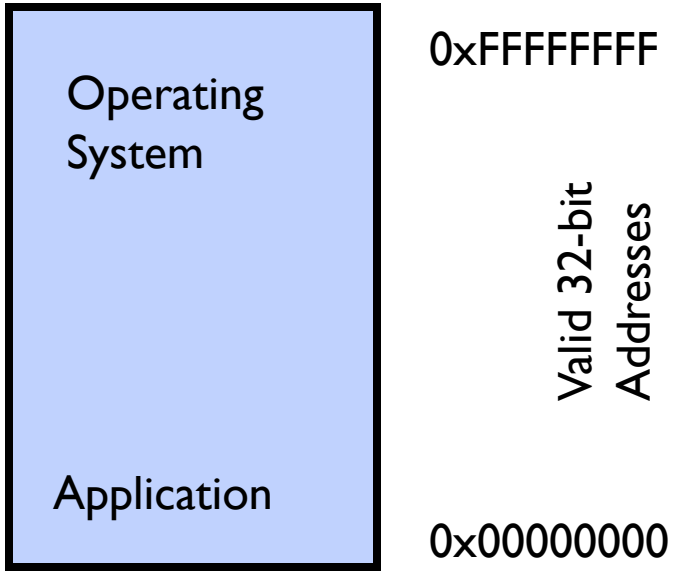

  - Application given illusion of dedicated machine by giving it reality of a dedicated machine

Primitive Multiprogramming

- Multiprogramming without Translation or Protection
  - Must somehow prevent address overlap between threads

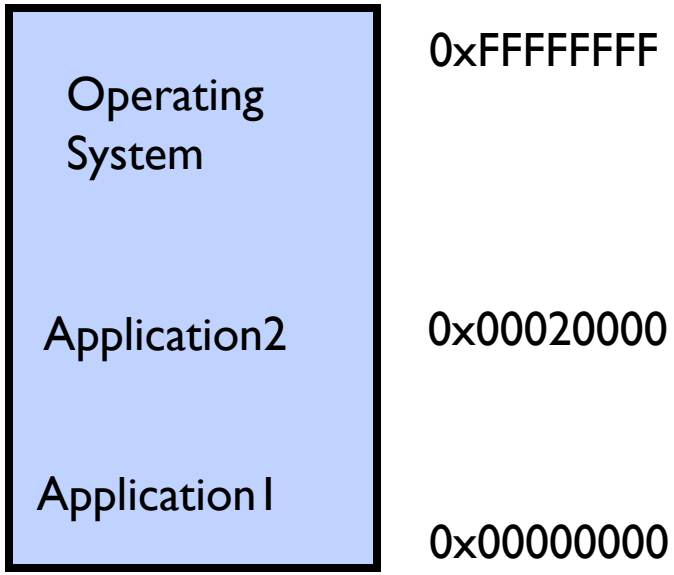

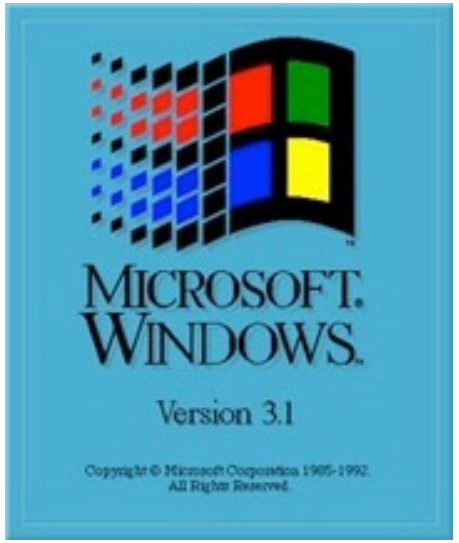

  - Use Loader/Linker: Adjust addresses while program loaded into memory (loads, stores, jumps)
    - » Everything adjusted to memory location of program
    - » Translation done by a linker-loader (relocation)
    - » Common in early days (… till Windows 3.x, 95?)
- With this solution, no protection: bugs in any program can cause other programs to crash or even the OS

Multiprogramming with Protection

- Can we protect programs from each other without translation?
  - **Yes: Base and Bound!**
  - **Used by, e.g., Cray-1 supercomputer**

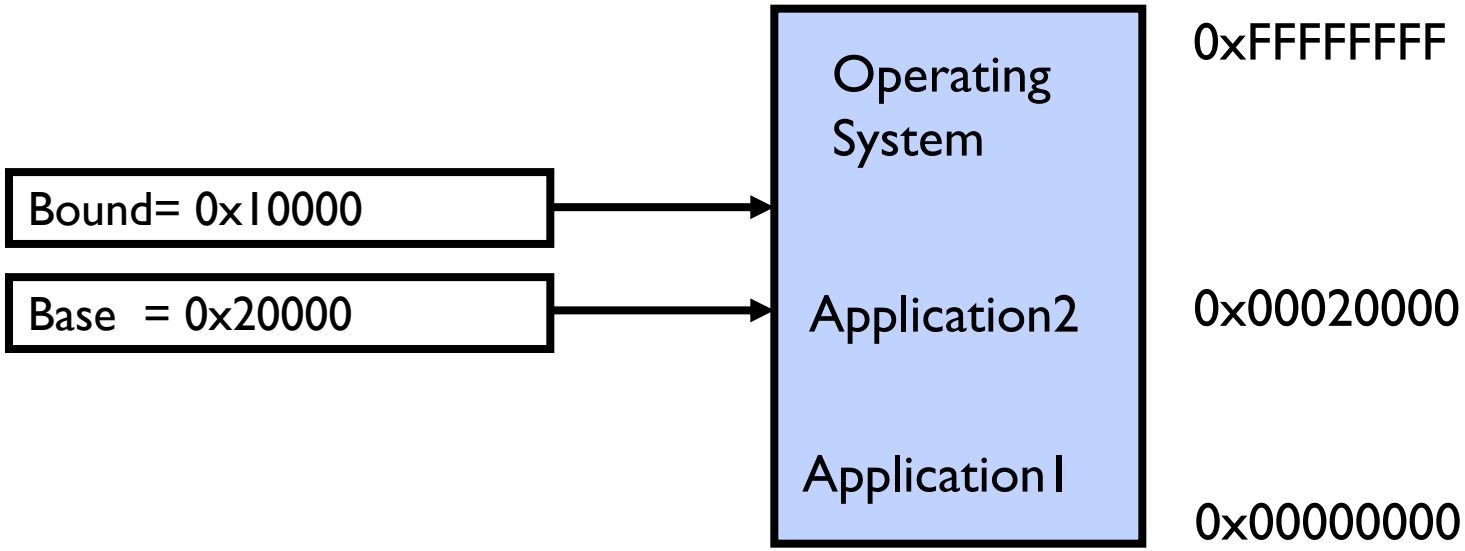

Recall: Base and Bound (No Translation)

- Still protects OS and isolates program
- Requires relocating loader
- No addition on address path

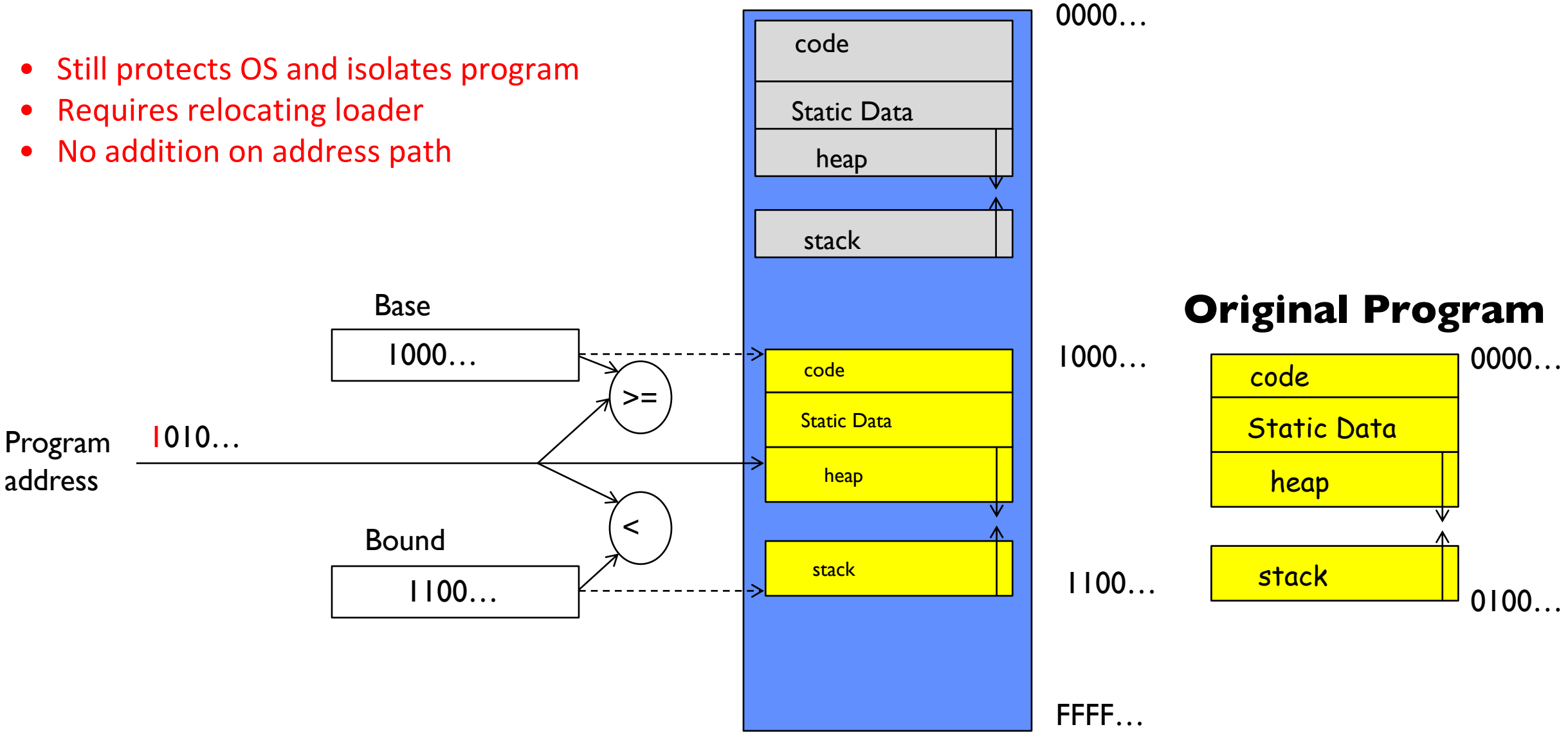

Recall: General Address translation

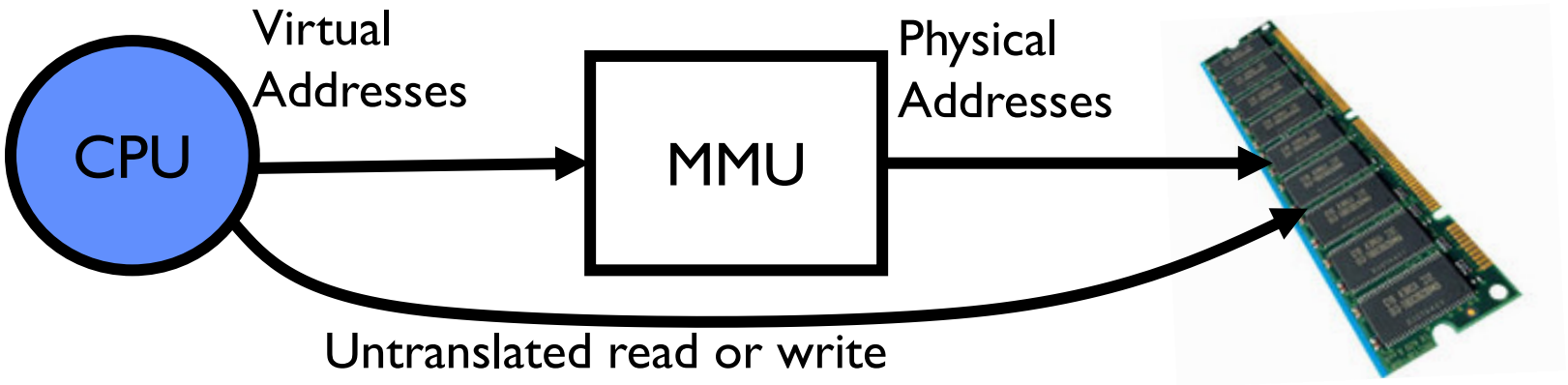

- Consequently, two views of memory:
  - View from the CPU (what program sees, virtual memory)
  - View from memory (physical memory)
  - Translation box (Memory Management Unit or MMU) converts between the two views
- Translation ⇒ much easier to implement protection!
  - If task A cannot even gain access to task B's data, no way for A to adversely affect B
- With translation, every program can be linked/loaded into same region of user address space

Recall: Base and Bound (with Translation)

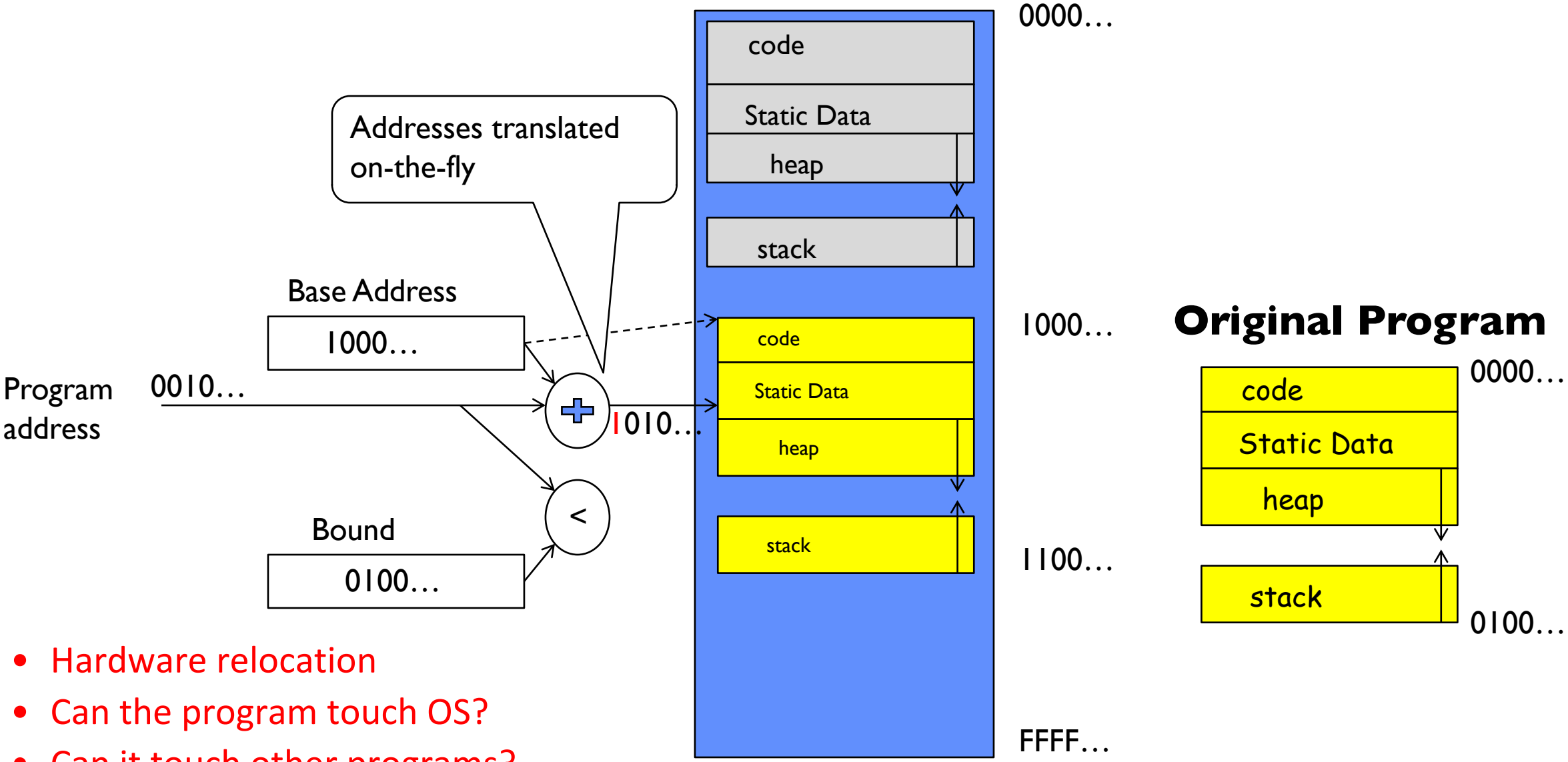

- Hardware relocation
- Can the program touch OS?
- Can it touch other programs?

Issues with Simple B&B Method

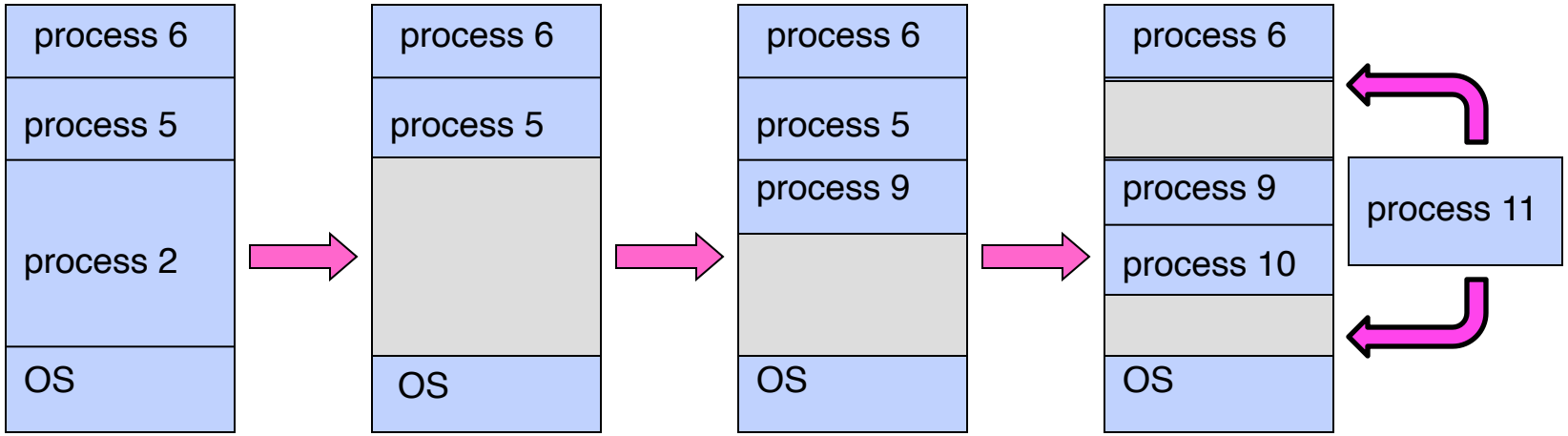

- Fragmentation problem over time
  - Not every process is same size ⇒ memory becomes fragmented over time
- Missing support for sparse address space
  - Would like to have multiple chunks/program (Code, Data, Stack, Heap, etc)
- Hard to do inter-process sharing
  - Want to share code segments when possible
  - Want to share memory between processes
  - Helped by providing multiple segments per process

More Flexible Segmentation

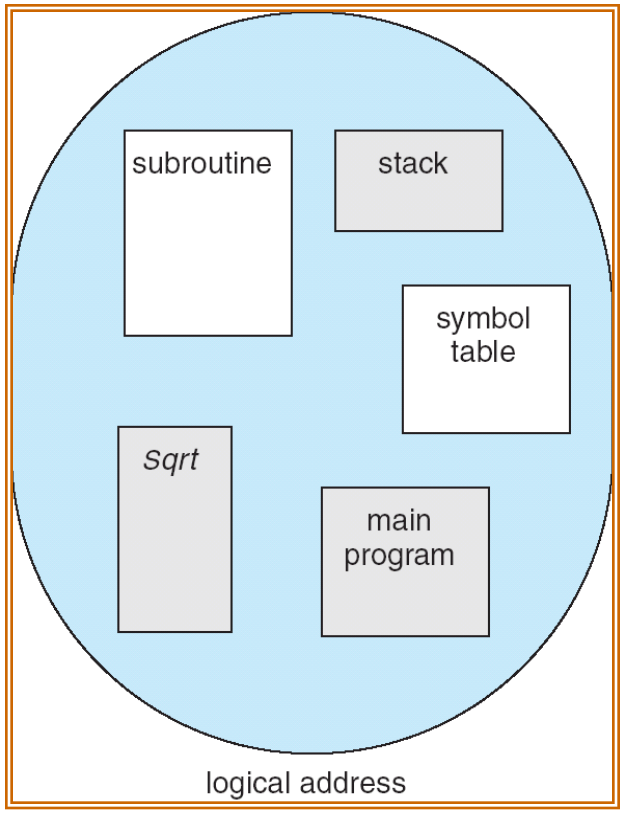

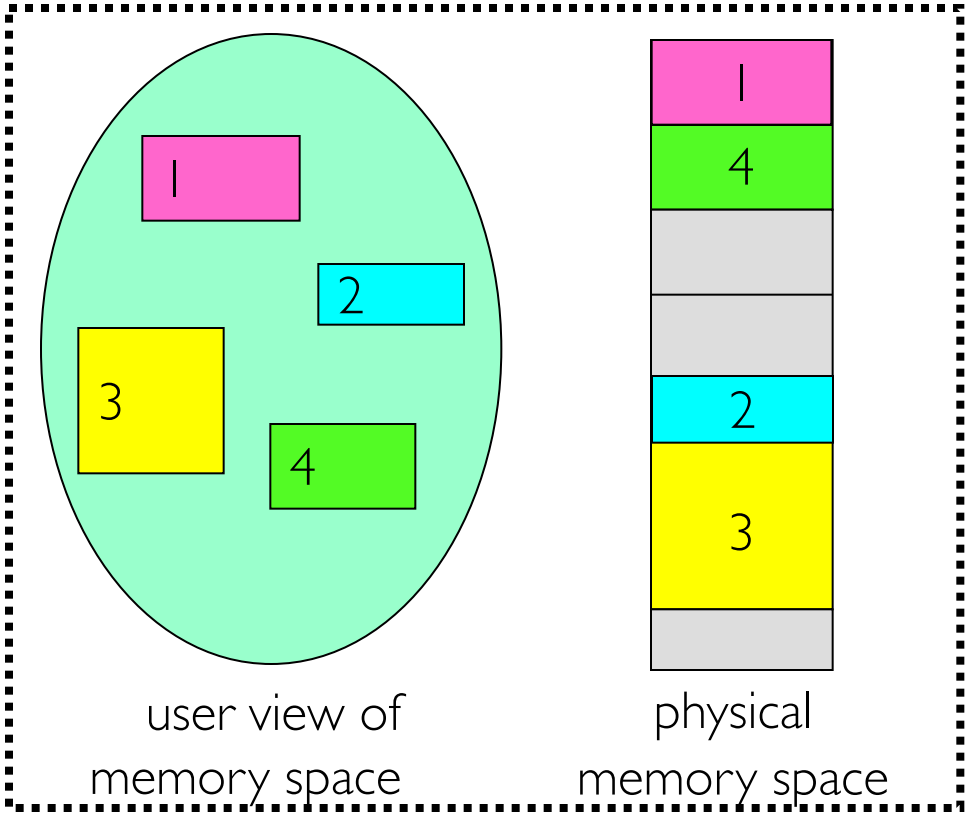

- Logical View: multiple separate segments
  - Typical: Code, Data, Stack
  - Others: memory sharing, etc
- Each segment is given region of contiguous memory
  - Has a base and limit
  - Can reside anywhere in physical memory

Implementation of Multi-Segment Model

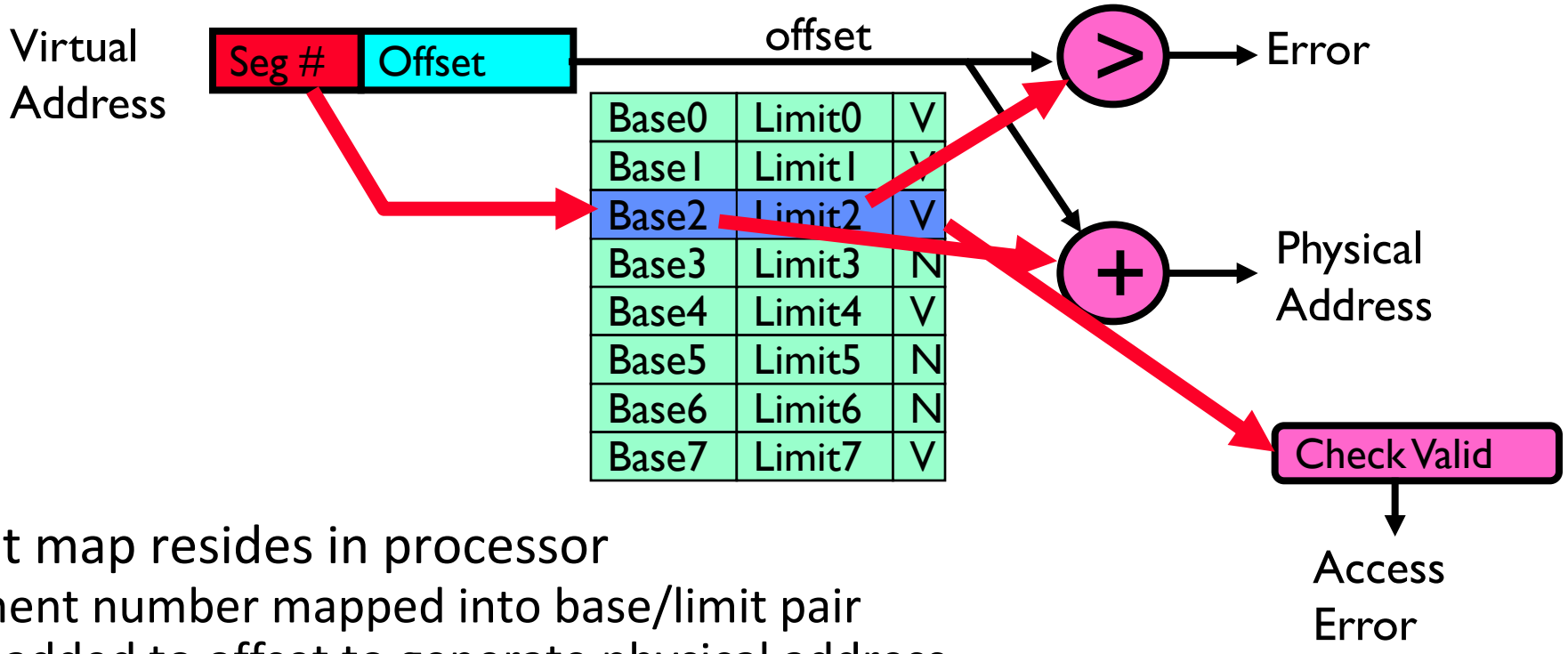

- Segment map resides in processor
  - Segment number mapped into base/limit pair
  - Base added to offset to generate physical address
  - Error check catches offset out of range
- As many chunks of physical memory as entries
  - Segment addressed by portion of virtual address
  - However, could be included in instruction instead:
    - » x86 Example: mov [es:bx],ax.
- What is "V/N" (valid / not valid)?
  - Can mark segments as invalid; requires check as well

Example: Four Segments (16 bit addresses)

Virtual Address Format

Seg ID #	Base	Limit
0 (code)	0x4000	0x0800
1 (data)	0x4800	0x1400
2 (shared)	0xF000	0x1000
3 (stack)	0x0000	0x3000

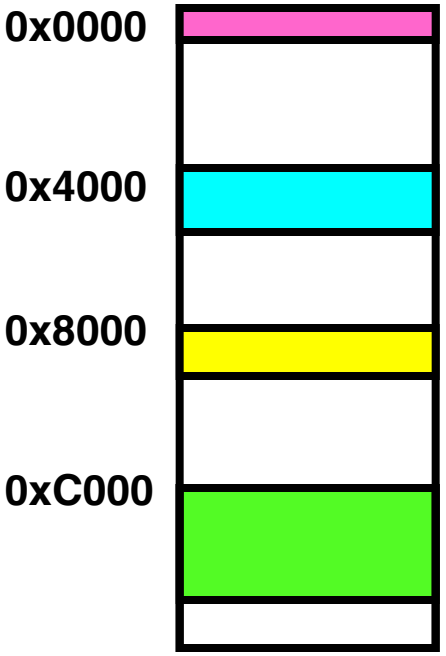

Virtual
Address Space

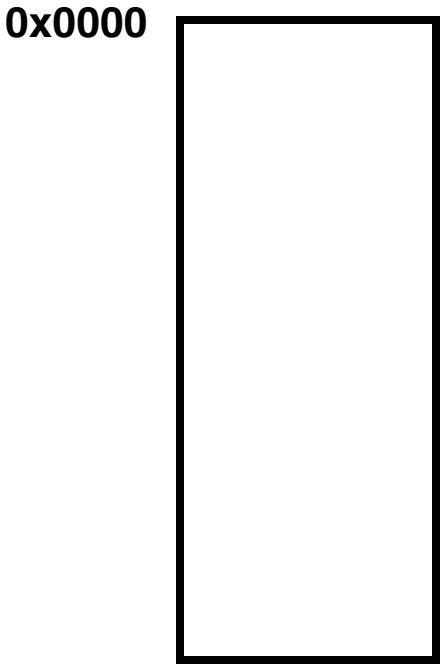

Physical
Address Space

Example: Four Segments (16 bit addresses)

Virtual Address Format

Seg ID #	Base	Limit
0 (code)	0x4000	0x0800
1 (data)	0x4800	0x1400
2 (shared)	0xF000	0x1000
3 (stack)	0x0000	0x3000

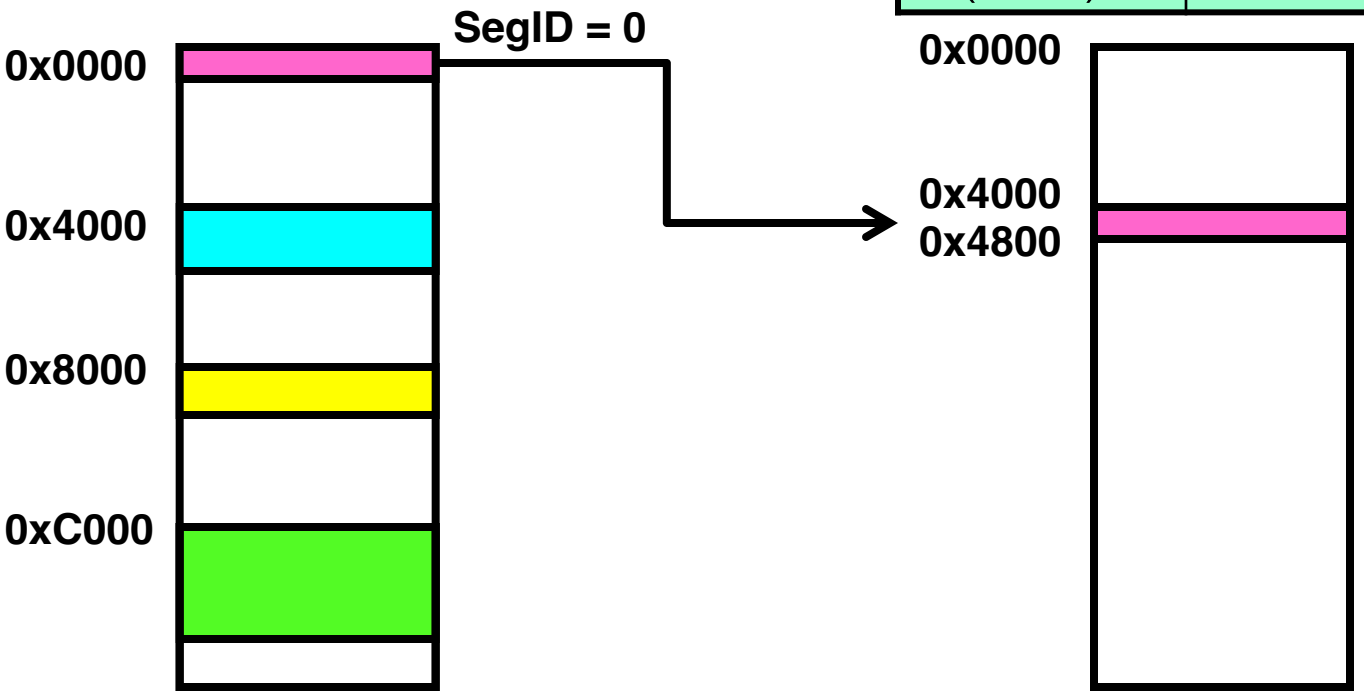

Virtual Address Space

Physical Address Space

Example: Four Segments (16 bit addresses)

Virtual Address Format

Seg ID #	Base	Limit
0 (code)	0x4000	0x0800
1 (data)	0x4800	0x1400
2 (shared)	0xF000	0x1000
3 (stack)	0x0000	0x3000

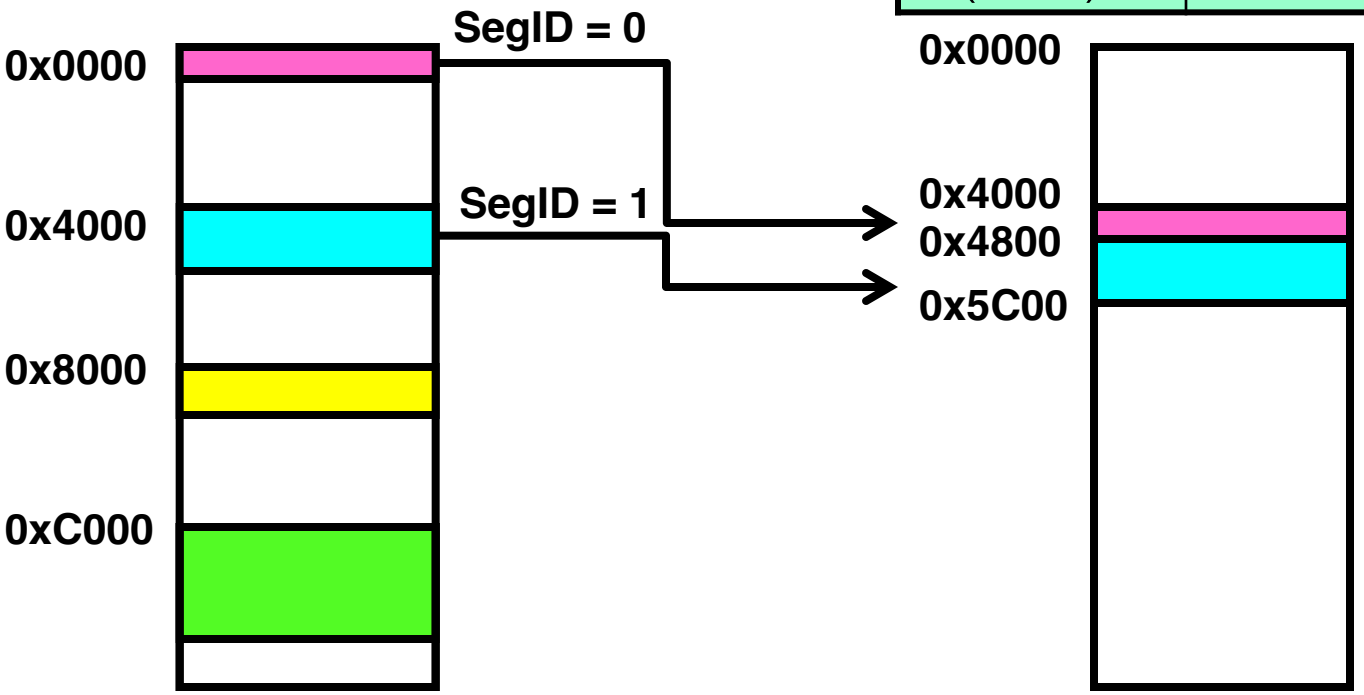

Virtual Address Space

Physical Address Space

Example: Four Segments (16 bit addresses)

Virtual Address Format

Seg ID #	Base	Limit
0 (code)	0x4000	0x0800
1 (data)	0x4800	0x1400
2 (shared)	0xF000	0x1000
3 (stack)	0x0000	0x3000

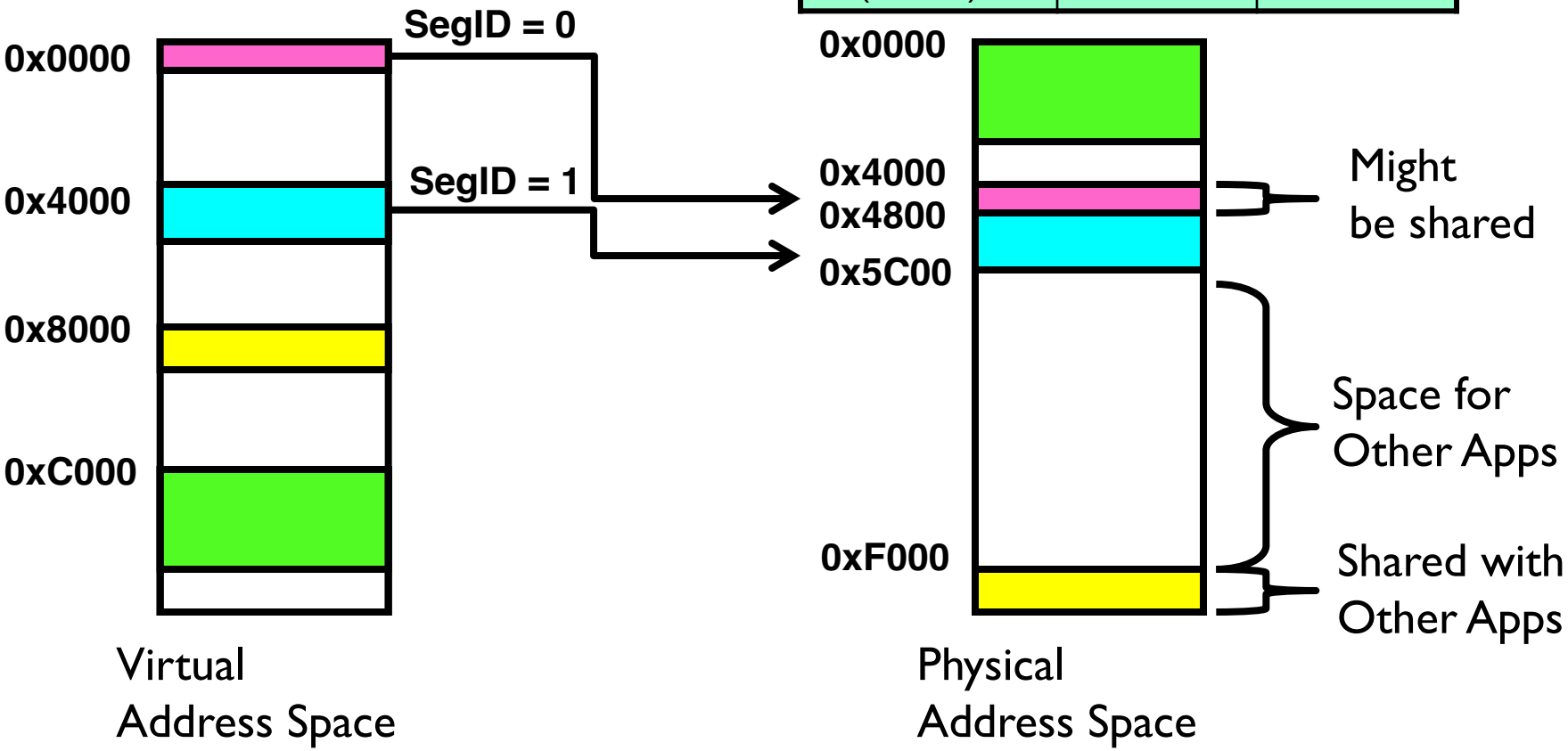

Observations about Segmentation

- Translation on every instruction fetch, load or store
- Virtual address space has holes
  - Segmentation efficient for sparse address spaces
- When it is OK to address outside valid range?
  - This is how the stack (and heap?) allowed to grow
  - For instance, stack takes fault, system automatically increases size of stack
- Need protection mode in segment table
  - For example, code segment would be read-only
  - Data and stack would be read-write (stores allowed)
- What must be saved/restored on context switch?
  - Segment table stored in CPU, not in memory (small)
  - Might store all of process memory onto disk when switched (called “swapping”)

What if not all segments fit in memory?

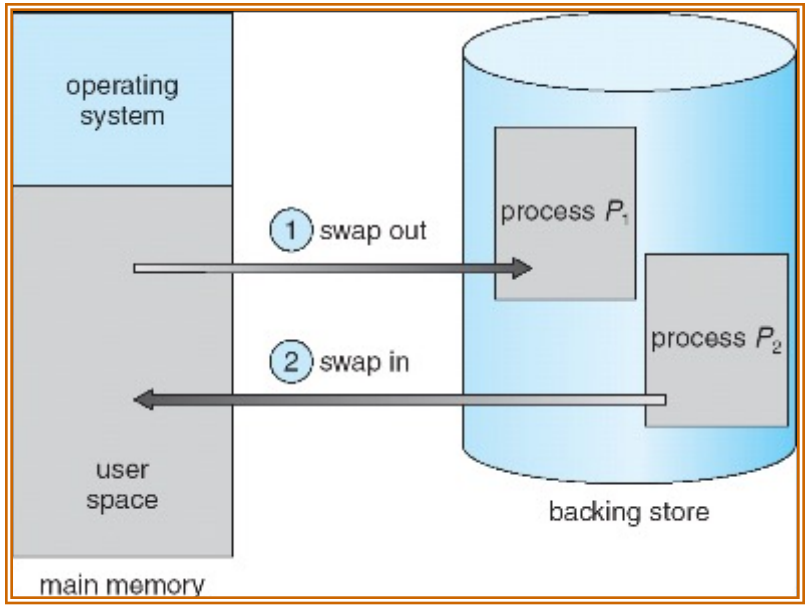

- Extreme form of Context Switch: Swapping
  - To make room for next process, some or all of the previous process is moved to disk
    - » Likely need to send out complete segments
  - This greatly increases the cost of context-switching
- What might be a desirable alternative?
  - Some way to keep only active portions of a process in memory at any one time
  - Need finer granularity control over physical memory

Group Discussion

- Topic: segmentation
  - What are the problems of segmentation?

- Discuss in groups of two to three students
  - Each group chooses a leader to summarize the discussion
  - In your group discussion, please do not dominate the discussion, and give everyone a chance to speak

Problems with Segmentation

- Must fit variable-sized chunks into physical memory
- May move processes multiple times to fit everything
- Limited options for swapping to disk
- Fragmentation: wasted space
  - External: free gaps between allocated chunks
  - Internal: don’t need all memory within allocated chunks

General Address Translation

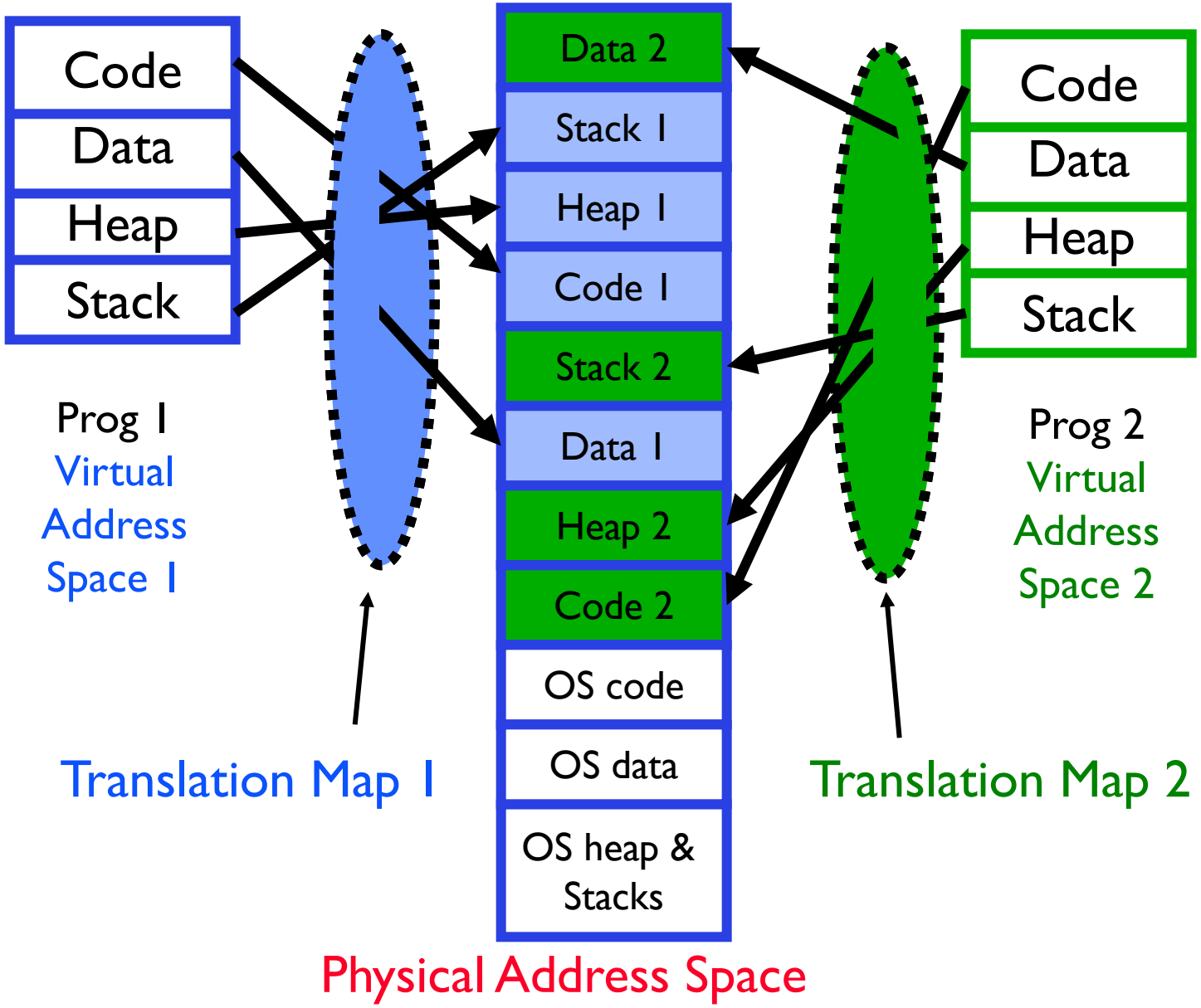

Paging: Physical Memory in Fixed Size Chunks

- Solution to fragmentation from segments?
  - Allocate physical memory in fixed size chunks ("pages")
  - Every chunk of physical memory is equivalent
    - » Can use simple vector of bits to handle allocation:
      `00110001110001101 … 110010`
    - » Each bit represents page of physical memory
      `1` ⇒ allocated, `0` ⇒ free

- Should pages be as big as our previous segments?
  - No: Can lead to lots of internal fragmentation
    - » Typically have small pages (1K-16K)
  - Consequently: need multiple pages/segment

How to Implement Simple Paging?

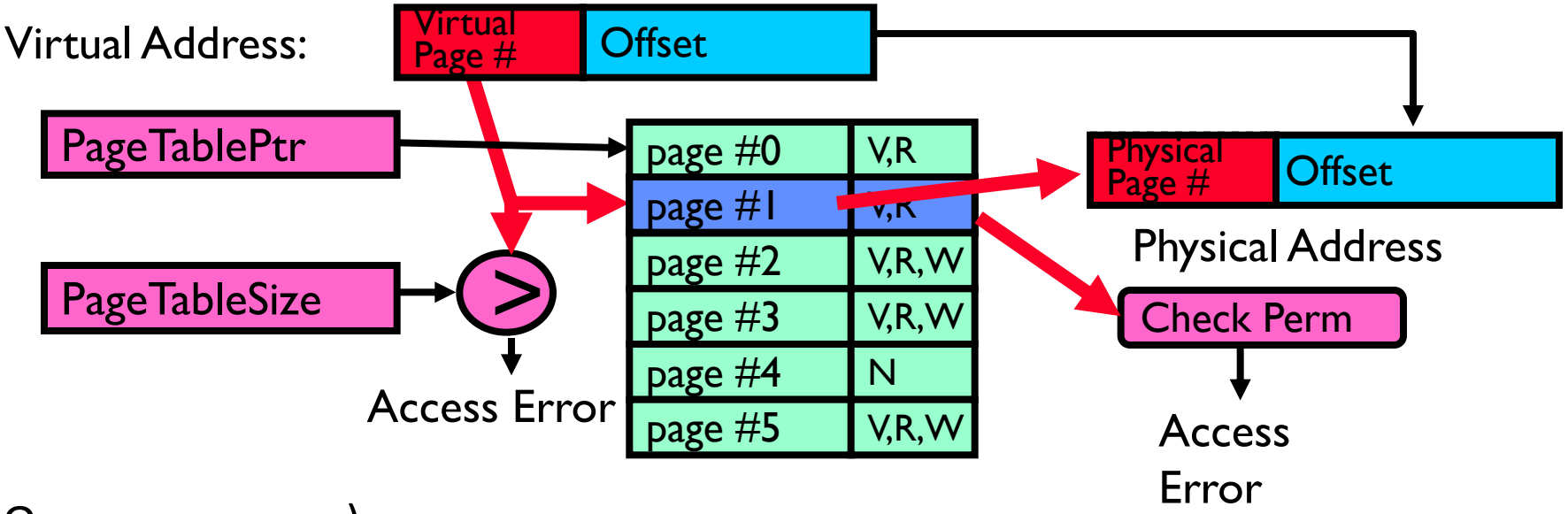

- Page Table (One per process)
  - Resides in physical memory
  - Contains physical page and permission for each virtual page (e.g. Valid bits, Read, Write, etc.)
- Virtual address mapping
  - Offset from Virtual address copied to Physical Address
    - » Example: 10 bit offset ⇒ 1024-byte pages
  - Virtual page # is all remaining bits
    - » Example for 32-bits: 32-10 = 22 bits, i.e. 4 million entries
    - » Physical page # copied from table into physical address
  - Check Page Table bounds and permissions

Simple Page Table Example

Example (4 byte pages)

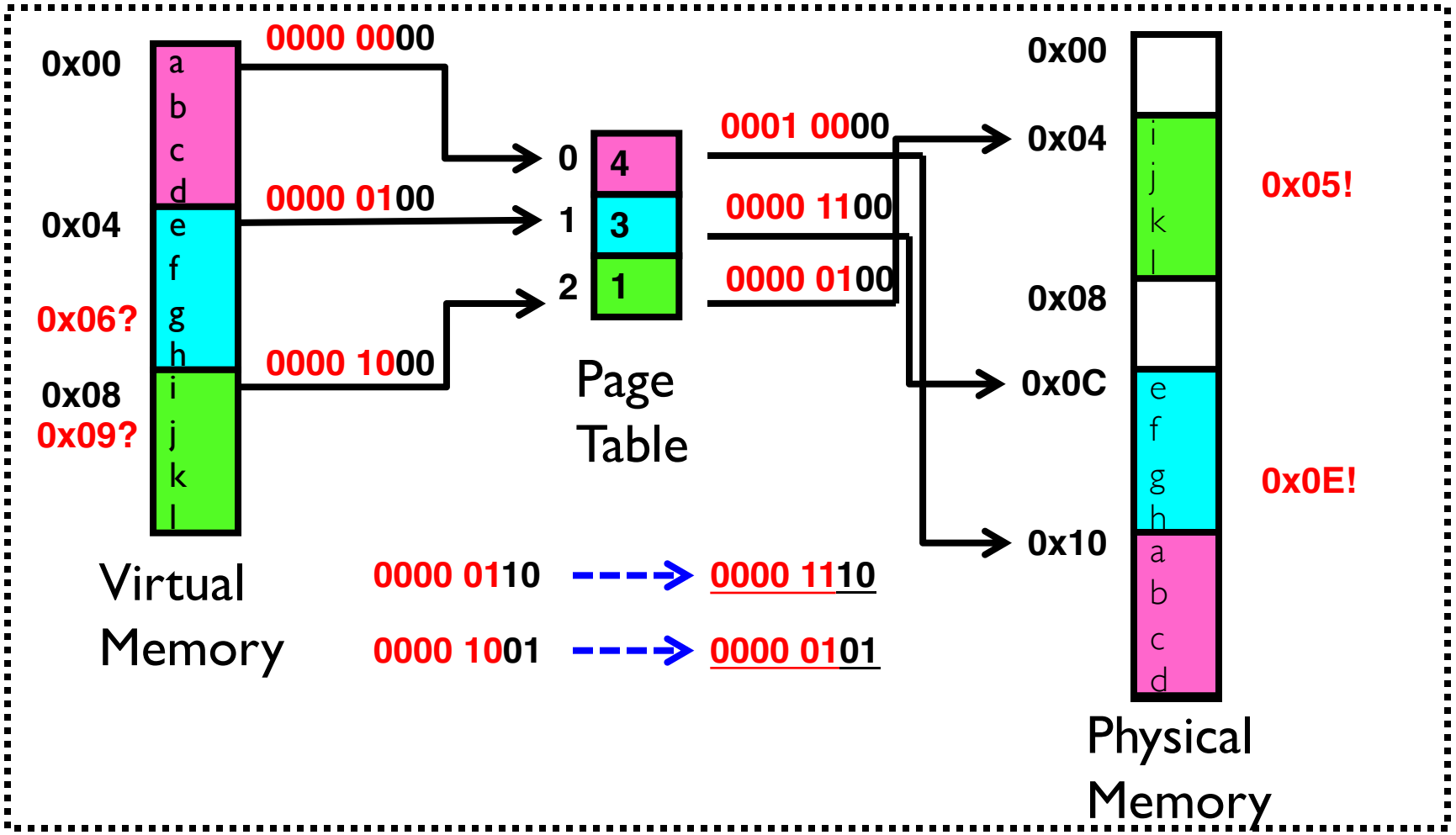

What about Sharing?

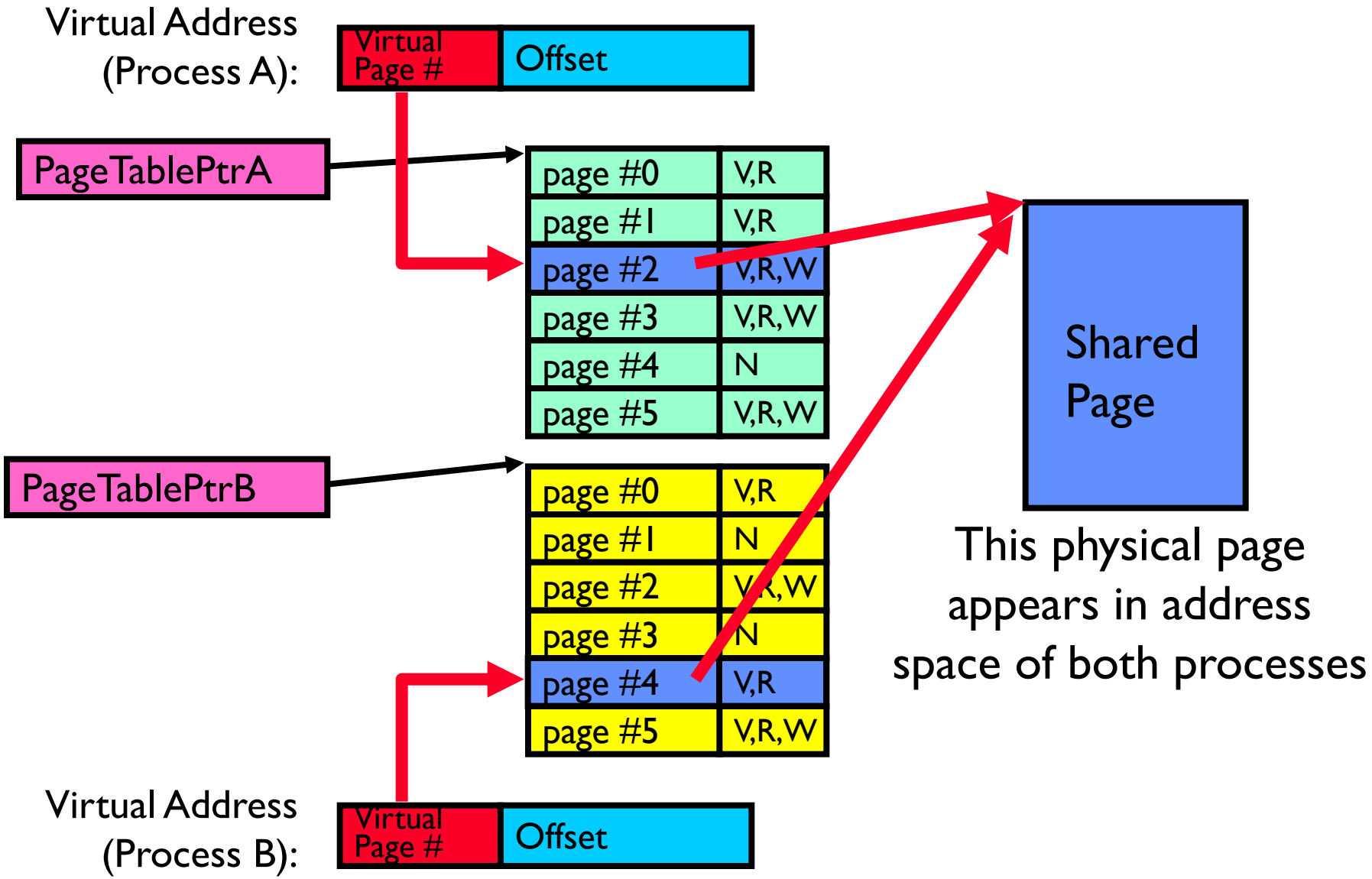

Where is page sharing used ?

- The “kernel region” of every process has the same page table entries
  - The process cannot access it at user level
  - But on U->K switch, kernel code can access it AS WELL AS the region for THIS user
- Different processes running same binary!
  - Execute-only, but do not need to duplicate code segments
- User-level system libraries (execute only)
- Shared-memory segments between different processes
  - Can actually share objects directly between processes
    - » Must map page into same place in address space!
  - This is a limited form of the sharing that threads have within a single process

Summary: Paging

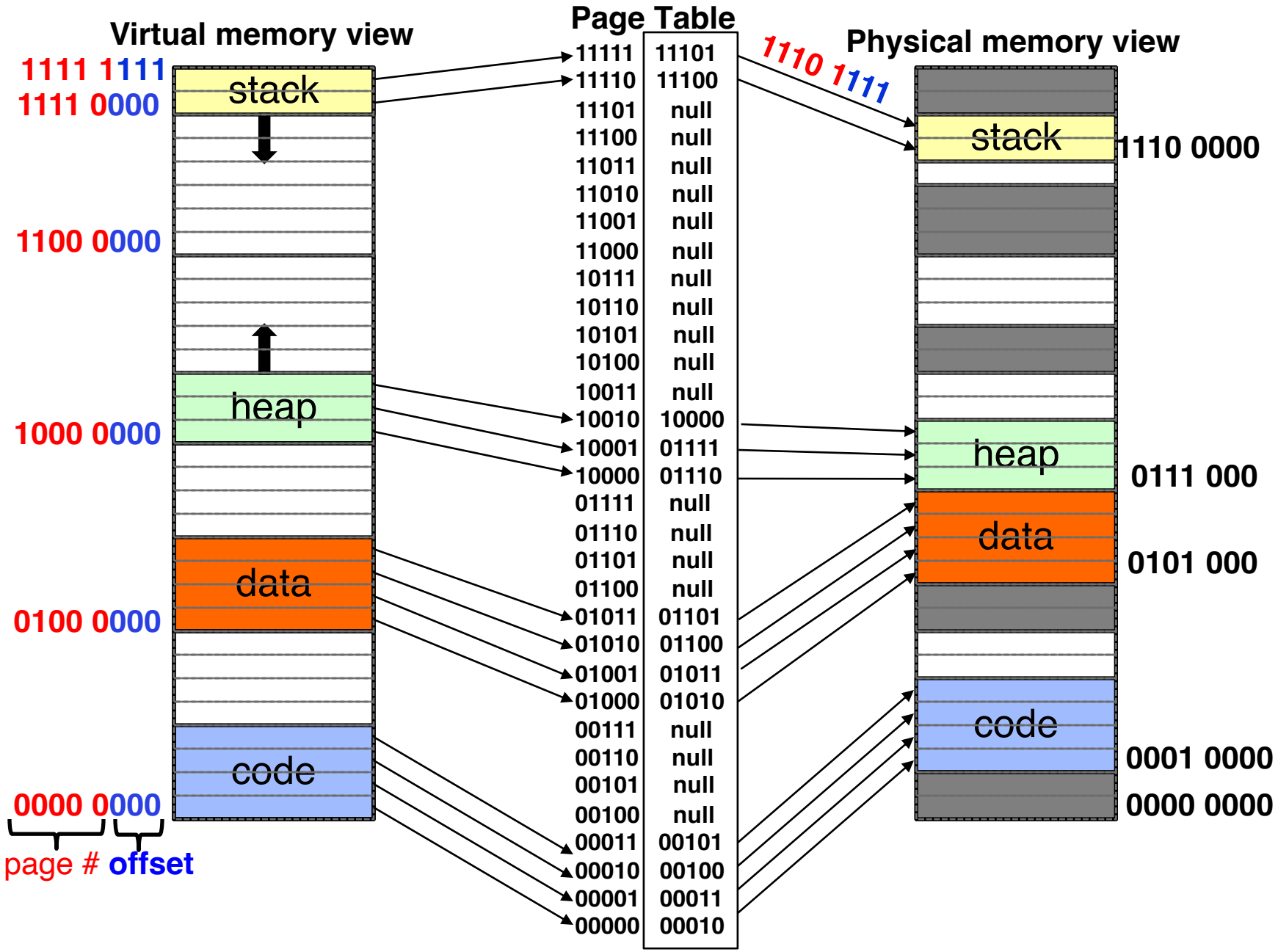

Summary: Paging

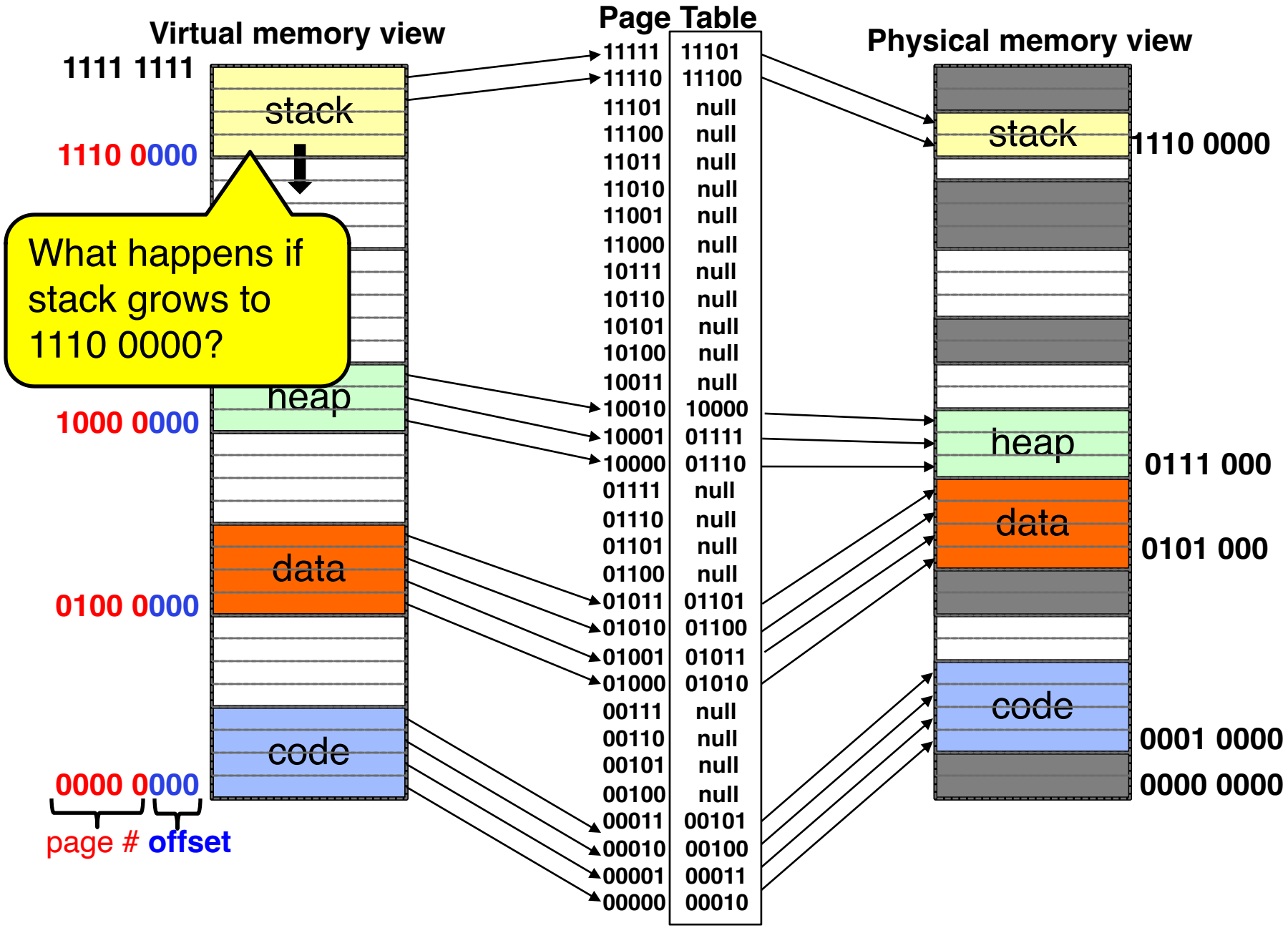

Summary: Paging

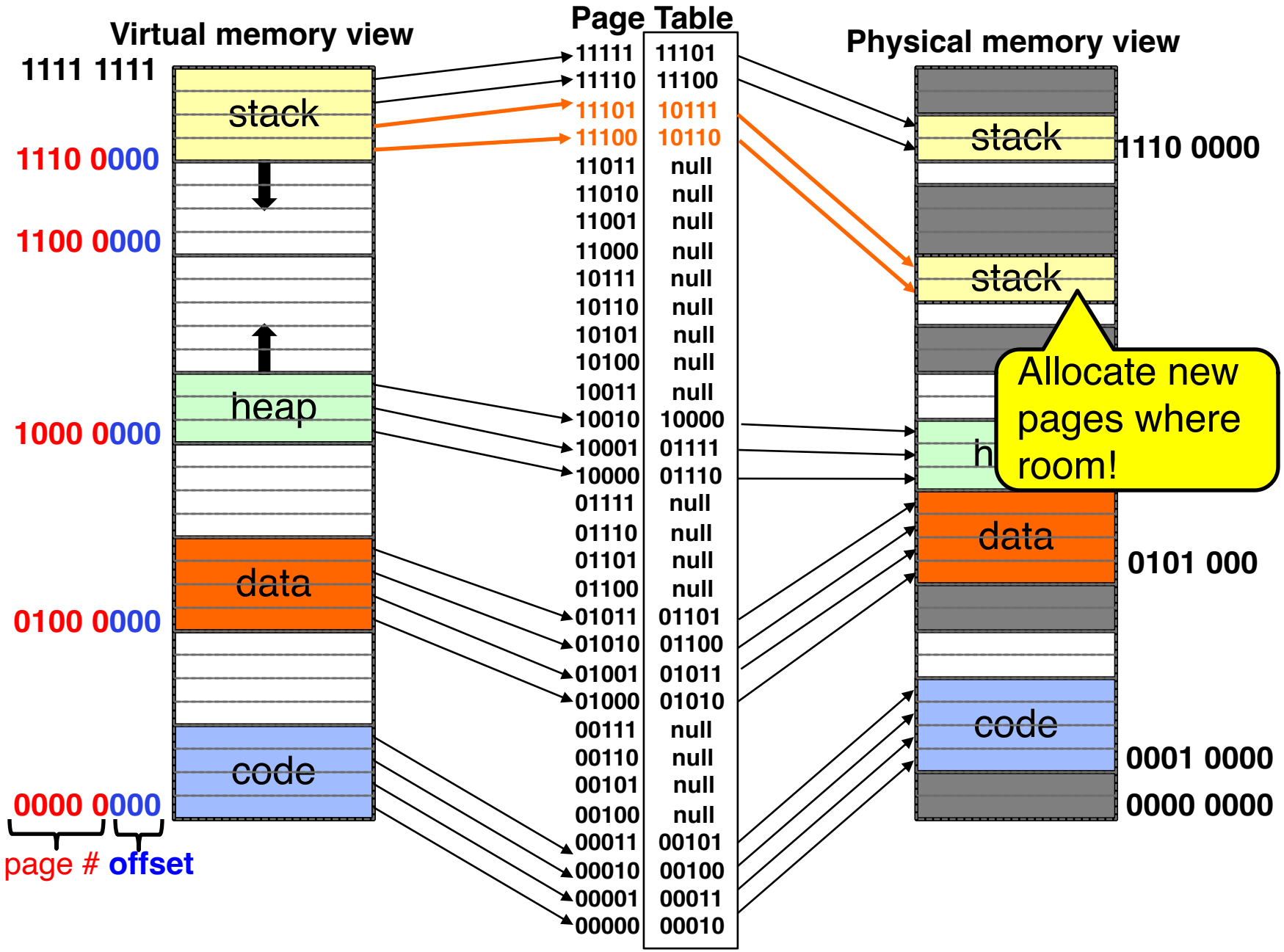

How big do things get?

- 32-bit address space => 2^{32} bytes (4 GB)
  - Note: "b" = bit, and "B" = byte
  - And *for memory*:
    - » "K"(kilo) = 2^{10} = 1024 ≈ 10^3 (But not quite!): Sometimes called "Ki" (Kibi)
    - » "M"(mega) = 2^{20} = $(1024)^2$ = 1,048,576 ≈ 10^6 (But not quite!): Sometimes called "Mi" (Mibi)
    - » "G"(giga) = 2^{30} = $(1024)^3$ = 1,073,741,824 ≈ 10^9 (But not quite!): Sometimes called "Gi" (Gibi)
- Typical page size: 4 KB
  - how many bits of the address is that ? (remember 2^{10} = 1024)
  - Ans – 4KB = $4\times 2^{10} = 2^{12} \Rightarrow$ 12 bits of the address
- So how big is the simple page table for *each* process?
  - $2^{32}/2^{12} = 2^{20}$ (that's about a million entries) x 4 bytes each => 4 MB
  - When 32-bit machines got started (vax 11/780, intel 80386), 16 MB was a LOT of memory
- How big is a simple page table on a 64-bit processor (x86_64)?
  - $2^{64}/2^{12} = 2^{52}$(that's 4.5×10^{15} or 4.5 exa-entries) x 8 bytes each = 36×10^{15} bytes or 36 exa-bytes!!!! This is a ridiculous amount of memory!
  - This is really a lot of space – for only the page table!!!
- The address space is *sparse*, i.e. has holes that are not mapped to physical memory
  - So, most of this space is taken up by page tables mapped to nothing

Group Discussion

- Topic: segmentation vs. paging
  - Can you compare segmentation and paging?
  - What are the pros and cons of each approach?

- Discuss in groups of two to three students
  - Each group chooses a leader to summarize the discussion
  - In your group discussion, please do not dominate the discussion, and give everyone a chance to speak

Page Table Discussion

- What needs to be switched on a context switch?
  - Page table pointer and limit
- What provides protection here?
  - Translation (per process) *and* dual-mode!
  - Can't let process alter its own page table!
- Analysis
  - Pros
    - » Simple memory allocation
    - » Easy to share
  - Con: What if address space is sparse?
    - » E.g., on UNIX, code starts at 0, stack starts at $(2^{31}-1)$
    - » With 4KB pages, need 1 million page table entries!
  - Con: What if table really big?
    - » Not all pages used all the time $\Rightarrow$ would be nice to have working set of page table in memory
- Simple Page table is way too big!
  - Does it all need to be in memory?
  - How about multi-level paging?
  - or combining paging and segmentation

Summary

- Segment Mapping
  - Segment registers within processor
  - Segment ID associated with each access
    - » Often comes from portion of virtual address
    - » Can come from bits in instruction instead (x86)
  - Each segment contains base and limit information
    - » Offset (rest of address) adjusted by adding base
- Page Tables
  - Memory divided into fixed-sized chunks of memory
  - Virtual page number from virtual address mapped through page table to physical page number
  - Offset of virtual address same as physical address
  - Large page table
- Next Time: Multi-Level Tables
  - Virtual address mapped to series of tables
  - Permit sparse population of address space