Operating Systems (Honor Track)

Synchronization 4: Readers/Writers

Xin Jin

Spring 2025

Acknowledgments: Ion Stoica, Berkeley CS 162

Recap: Locks using interrupts

```
lock.Acquire();
 …
 critical section;
 …
lock.Release();
```

```
Acquire() {
  disable interrupts;
}
```

```
Release() {
  enable interrupts;
}
```

If one thread in critical section, no other activity (including OS) can run!

```
int value = 0;
Acquire() {
  // Short busy-wait time
  disable interrupts;
  if (value == 1) {
    put thread on wait-queue;
    go to sleep() //??
  } else {
    value = 1;
    enable interrupts;
  }
}
```

```
Release() {
  // Short busy-wait time
  disable interrupts;
  if anyone on wait queue {
    take thread off wait-queue
    Place on ready queue;
  } else {
    value = 0;
  }
  enable interrupts;
}
```

Recap: Locks using test & set

```
lock.Acquire();
 …
 critical section;
 …
lock.Release();
```

```
int value = 0;
Acquire() {
  while(test&set(value));
}

Release() {
  value = 0;
}
```

Threads waiting to enter critical section busy-wait

```
int guard = 0;
int value = 0;
Acquire() {
  // Short busy-wait time
  while(test&set(guard));
  if (value == 1) {
    put thread on wait-queue;
    go to sleep()& guard = 0;
  } else {
    value = 1;
    guard = 0;
  }
}

Release() {
  // Short busy-wait time
  while (test&set(guard));
  if anyone on wait queue {
    take thread off wait-queue
    Place on ready queue;
  } else {
    value = 0;
  }
  guard = 0;
}
```

Recap: Condition Variables

- How do we change the consumer() routine to wait until something is on the queue?
  - Could do this by keeping a count of the number of things on the queue (with semaphores), but error prone
- Condition Variable: a queue of threads waiting for something *inside* a critical section
  - Key idea: allow sleeping inside critical section by atomically releasing lock at time we go to sleep
  - Contrast to semaphores: Can't wait inside critical section
- Operations:
  - `Wait(&lock)`: Atomically release lock and go to sleep. Re-acquire lock later, before returning.
  - `Signal()`: Wake up one waiter, if any
  - `Broadcast()`: Wake up all waiters
- Rule: Must hold lock when doing condition variable ops!

Recap: Hoare monitors

- Signaler gives up lock, CPU to waiter; waiter runs immediately
- Then, Waiter gives up lock, processor back to signaler when it exits critical section or if it waits again

```
…
acquire(&buf_lock);
…
cond_signal(&buf_CV);
…
release(&buf_lock);
```

Lock, CPU

Lock, CPU

```
acquire(&buf_lock);
…
if (isEmpty(&queue)) {
  cond_wait(&buf_CV,&buf_lock);
}
…
release(&buf_lock);
```

- On first glance, this seems like good semantics
  – Waiter gets to run immediately, condition is still correct!
- Most textbooks talk about Hoare scheduling
  – However, hard to do, not really necessary!
  – Forces a lot of context switching (inefficient!)

Recap: Mesa monitors

- Signaler keeps lock and processor
- Waiter placed on ready queue with no special priority

```
…
acquire(&buf_lock)
…
cond_signal(&buf_CV);
…
release(&buf_lock));
```

Put waiting thread on ready queue

schedule thread (sometime later!)

```
acquire(&buf_lock);
…
while (isEmpty(&queue)) {
  cond_wait(&buf_CV,&buf_lock);
}
…
lock.Release();
```

- Practically, need to check condition again after wait
  - By the time the waiter gets scheduled, condition may be false again – so, just check again with the "while" loop
- Most real operating systems do this!
  - More efficient, easier to implement
  - Signaler's cache state, etc. still good

Recap: Circular Buffer – 3rd cut (Monitors, pthread-like)

```
lock buf_lock = <initially unlocked>
condition producer_CV = <initially empty>
condition consumer_CV = <initially empty>

Producer(item) {
  acquire(&buf_lock);
  while (buffer full) { cond_wait(&producer_CV, &buf_lock); }
  enqueue(item);
  cond_signal(&consumer_CV);
  release(&buf_lock);
}

Consumer() {
  acquire(buf_lock);
  while (buffer empty) { cond_wait(&consumer_CV, &buf_lock); }
  item = dequeue();
  cond_signal(&producer_CV);
  release(buf_lock);
  return item
}
```

What does thread do when it is waiting?
- Sleep, not busywait!

Readers/Writers Problem

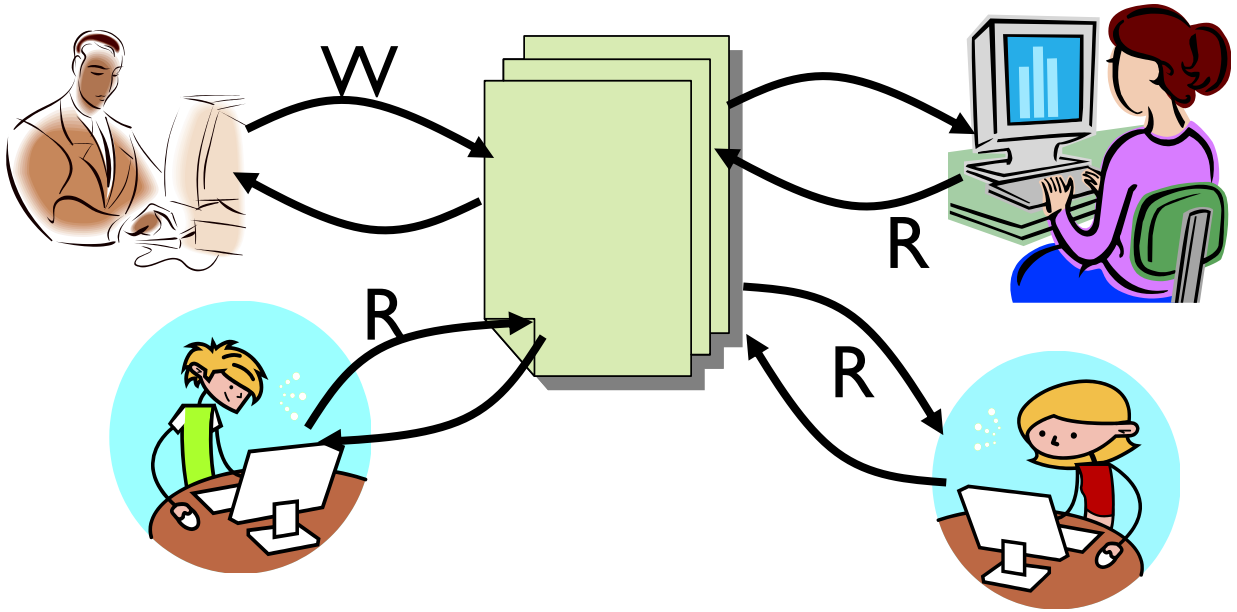

- Motivation: Consider a shared database
  - Two classes of users:
    - » Readers – never modify database
    - » Writers – read and modify database
  - Is using a single lock on the whole database sufficient?
    - » Like to have many readers at the same time
    - » Only one writer at a time

Basic Readers/Writers Solution

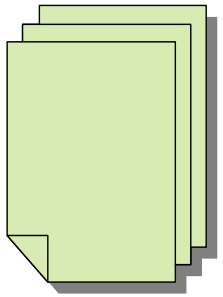

- Correctness Constraints:
  - Readers can access database when no writers
  - Writers can access database when no readers or writers
  - Only one thread manipulates state variables at a time
- Basic structure of a solution:
  - **`Reader()`**
    ```
    Wait until no writers
    Access database
    Check out - wake up a waiting writer
    ```
  - **`Writer()`**
    ```
    Wait until no active readers or writers
    Access database
    Check out - wake up waiting readers or writer
    ```
  - State variables (Protected by a lock called “lock”):
    - » int AR: Number of active readers; initially = 0
    - » int WR: Number of waiting readers; initially = 0
    - » int AW: Number of active writers; initially = 0
    - » int WW: Number of waiting writers; initially = 0
    - » Condition okToRead = NIL
    - » Condition okToWrite = NIL

Group Discussion: How to implement?

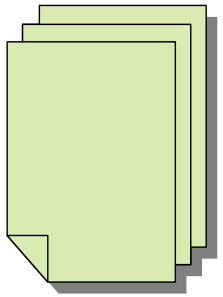

- Correctness Constraints:
  - Readers can access database when no writers
  - Writers can access database when no readers or writers
  - Only one thread manipulates state variables at a time
- Basic structure of a solution:
  - **`Reader()`**
    ```
    Wait until no writers
    Access database
    Check out - wake up a waiting writer
    ```
  - **`Writer()`**
    ```
    Wait until no active readers or writers
    Access database
    Check out - wake up waiting readers or writer
    ```
  - State variables (Protected by a lock called “lock”):
    - » int AR: Number of active readers; initially = 0
    - » int WR: Number of waiting readers; initially = 0
    - » int AW: Number of active writers; initially = 0
    - » int WW: Number of waiting writers; initially = 0
    - » Condition okToRead = NIL
    - » Condition okToWrite = NIL

Code for a Reader

```
Reader() {
  // First check self into system
  acquire(&lock);
  while ((AW + WW) > 0) { // Is it safe to read?
    WR++;                 // No. Writers exist
    cond_wait(&okToRead,&lock);// Sleep on cond var
    WR--;                 // No longer waiting
  }
  AR++;                   // Now we are active!
  release(&lock);
  // Perform actual read-only access
  AccessDatabase(ReadOnly);
  // Now, check out of system
  acquire(&lock);
  AR--;                   // No longer active
  if (AR == 0 && WW > 0)  // No other active readers
    cond_signal(&okToWrite);// Wake up one writer
  release(&lock);
}
```

Code for a Writer

```
Writer() {
  // First check self into system
  acquire(&lock);
  while ((AW + AR) > 0) { // Is it safe to write?
    WW++;                 // No. Active users exist
    cond_wait(&okToWrite,&lock);  // Sleep on cond var
    WW--;                 // No longer waiting
  }
  AW++;                   // Now we are active!
  release(&lock);
  // Perform actual read/write access
  AccessDatabase(ReadWrite);
  // Now, check out of system
  acquire(&lock);
  AW--;                   // No longer active
  if (WW > 0){            // Give priority to writers
    cond_signal(&okToWrite);// Wake up one writer
  } else if (WR > 0) {    // Otherwise, wake reader
    cond_broadcast(&okToRead); // Wake all readers
  }
  release(&lock);
}
```

Simulation of Readers/Writers Solution

- Use an example to simulate the solution
- Consider the following sequence of operators:
  - R1, R2, W1, R3
- Initially: AR = 0, WR = 0, AW = 0, WW = 0

Simulation of Readers/Writers Solution

- R1 comes along (no waiting threads)
- AR = 0, WR = 0, AW = 0, WW = 0

```
Reader() {
    acquire(&lock)
    while ((AW + WW) > 0) { // Is it safe to read?
      WR++;                 // No. Writers exist
      cond_wait(&okToRead,&lock);// Sleep on cond var
      WR--;                 // No longer waiting
    }
    AR++;                   // Now we are active!
    release(&lock);

    AccessDBase(ReadOnly);

    acquire(&lock);
    AR--;
    if (AR == 0 && WW > 0)
      cond_signal(&okToWrite);
    release(&lock);
  }
```

Simulation of Readers/Writers Solution

- R1 comes along (no waiting threads)
- AR = 0, WR = 0, AW = 0, WW = 0

```
Reader() {
    acquire(&lock);
    while ((AW + WW) > 0) { // Is it safe to read?
      WR++;                 // No. Writers exist
      cond_wait(&okToRead,&lock);// Sleep on cond var
      WR--;                 // No longer waiting
    }
    AR++;                   // Now we are active!
    release(&lock);

    AccessDBase(ReadOnly);

    acquire(&lock);
    AR--;
    if (AR == 0 && WW > 0)
      cond_signal(&okToWrite);
    release(&lock);
  }
```

Simulation of Readers/Writers Solution

- R1 comes along (no waiting threads)
- AR = 1, WR = 0, AW = 0, WW = 0

```
Reader() {
    acquire(&lock);
    while ((AW + WW) > 0) { // Is it safe to read?
      WR++;                 // No. Writers exist
      cond_wait(&okToRead,&lock);// Sleep on cond var
      WR--;                 // No longer waiting
    }
    AR++;                   // Now we are active!
    release(&lock);

    AccessDBase(ReadOnly);

    acquire(&lock);
    AR--;
    if (AR == 0 && WW > 0)
      cond_signal(&okToWrite);
    release(&lock);
  }
```

Simulation of Readers/Writers Solution

- R1 comes along (no waiting threads)
- AR = 1, WR = 0, AW = 0, WW = 0

```
Reader() {
    acquire(&lock);
    while ((AW + WW) > 0) { // Is it safe to read?
      WR++;                 // No. Writers exist
      cond_wait(&okToRead,&lock);// Sleep on cond var
      WR--;                 // No longer waiting
    }
    AR++;                   // Now we are active!
    release(&lock);

    AccessDBase(ReadOnly);

    acquire(&lock);
    AR--;
    if (AR == 0 && WW > 0)
      cond_signal(&okToWrite);
    release(&lock);
  }
```

Simulation of Readers/Writers Solution

- R1 accessing dbase (no other threads)
- AR = 1, WR = 0, AW = 0, WW = 0

```
Reader() {
    acquire(&lock);
    while ((AW + WW) > 0) { // Is it safe to read?
      WR++;                 // No. Writers exist
      cond_wait(&okToRead,&lock);// Sleep on cond var
      WR--;                 // No longer waiting
    }
    AR++;                   // Now we are active!
    release(&lock);

    AccessDBase(ReadOnly);

    acquire(&lock);
    AR--;
    if (AR == 0 && WW > 0)
      cond_signal(&okToWrite);
    release(&lock);
  }
```

Simulation of Readers/Writers Solution

- R2 comes along (R1 accessing dbase)
- AR = 1, WR = 0, AW = 0, WW = 0

```
Reader() {
    acquire(&lock);
    while ((AW + WW) > 0) { // Is it safe to read?
      WR++;                 // No. Writers exist
      cond_wait(&okToRead,&lock);// Sleep on cond var
      WR--;                 // No longer waiting
    }
    AR++;                   // Now we are active!
    release(&lock);

    AccessDBase(ReadOnly);

    acquire(&lock);
    AR--;
    if (AR == 0 && WW > 0)
      cond_signal(&okToWrite);
    release(&lock);
  }
```

Simulation of Readers/Writers Solution

- R2 comes along (R1 accessing dbase)
- AR = 1, WR = 0, AW = 0, WW = 0

```
Reader() {
    acquire(&lock);
    while ((AW + WW) > 0) { // Is it safe to read?
      WR++;                 // No. Writers exist
      cond_wait(&okToRead,&lock);// Sleep on cond var
      WR--;                 // No longer waiting
    }
    AR++;                   // Now we are active!
    release(&lock);

    AccessDBase(ReadOnly);

    acquire(&lock);
    AR--;
    if (AR == 0 && WW > 0)
      cond_signal(&okToWrite);
    release(&lock);
  }
```

Simulation of Readers/Writers Solution

- R2 comes along (R1 accessing dbase)
- AR = 2, WR = 0, AW = 0, WW = 0

```
Reader() {
    acquire(&lock);
    while ((AW + WW) > 0) { // Is it safe to read?
      WR++;                 // No. Writers exist
      cond_wait(&okToRead,&lock);// Sleep on cond var
      WR--;                 // No longer waiting
    }
    AR++;                   // Now we are active!
    release(&lock);

    AccessDBase(ReadOnly);

    acquire(&lock);
    AR--;
    if (AR == 0 && WW > 0)
      cond_signal(&okToWrite);
    release(&lock);
  }
```

Simulation of Readers/Writers Solution

- R2 comes along (R1 accessing dbase)
- AR = 2, WR = 0, AW = 0, WW = 0

```
Reader() {
    acquire(&lock);
    while ((AW + WW) > 0) { // Is it safe to read?
      WR++;                 // No. Writers exist
      cond_wait(&okToRead,&lock);// Sleep on cond var
      WR--;                 // No longer waiting
    }
    AR++;                   // Now we are active!
    release(&lock);

    AccessDBase(ReadOnly);

    acquire(&lock);
    AR--;
    if (AR == 0 && WW > 0)
      cond_signal(&okToWrite);
    release(&lock);
  }
```

Simulation of Readers/Writers Solution

- R1 and R2 accessing dbase
- AR = 2, WR = 0, AW = 0, WW = 0

```
Reader() {
    acquire(&lock);
    while ((AW + WW) > 0) { // Is it safe to read?
      WR++;                 // No. Writers exist
      cond_wait(&okToRead,&lock);// Sleep on cond var
      WR--;                 // No longer waiting
    }
    AR++;                   // Now we are active!
    release(&lock);

    AccessDBase(ReadOnly);

    acquire(&lock);
    AR--;
    if (AR == 0 && WW > 0)
```

Assume readers take a while to access database

Situation: Locks released, only AR is non-zero

Simulation of Readers/Writers Solution

- W1 comes along (R1 and R2 are still accessing dbase)
- AR = 2, WR = 0, AW = 0, WW = 0

```
Writer() {
    acquire(&lock);
    while ((AW + AR) > 0) {  // Is it safe to write?
       WW++;                 // No. Active users exist
       cond_wait(&okToWrite,&lock);// Sleep on cond var
       WW--;                 // No longer waiting
    }
    AW++;
    release(&lock);

    AccessDBase(ReadWrite);


    acquire(&lock);
    AW--;
    if (WW > 0){
       cond_signal(&okToWrite);
    } else_if (WR > 0) {
       cond_broadcast(&okToRead);
    }
    release(&lock);
  }
```

Simulation of Readers/Writers Solution

- W1 comes along (R1 and R2 are still accessing dbase)
- AR = 2, WR = 0, AW = 0, WW = 0

```
Writer() {
    acquire(&lock);
    while ((AW + AR) > 0) {   // Is it safe to write?
       WW++;                  // No. Active users exist
       cond_wait(&okToWrite,&lock);// Sleep on cond var
       WW--;                  // No longer waiting
    }
    AW++;
    release(&lock);

    AccessDBase(ReadWrite);


    acquire(&lock);
    AW--;
    if (WW > 0){
       cond_signal(&okToWrite);
    } else_if (WR > 0) {
       cond_broadcast(&okToRead);
    }
    release(&lock);
  }
```

Simulation of Readers/Writers Solution

- W1 comes along (R1 and R2 are still accessing dbase)
- AR = 2, WR = 0, AW = 0, WW = 1

```
Writer() {
    acquire(&lock);
    while ((AW + AR) > 0) {  // Is it safe to write?
      WW++;                  // No. Active users exist
      cond_wait(&okToWrite,&lock);// Sleep on cond var
      WW--;                  // No longer waiting
    }
    AW++;
    release(&lock);

    AccessDBase(ReadWrite);


    acquire(&lock);
    AW--;
    if (WW > 0){
      cond_signal(&okToWrite);
    } else_if (WR > 0) {
      cond_broadcast(&okToRead);
    }
    release(&lock);
  }
```

Simulation of Readers/Writers Solution

- R3 comes along (R1 and R2 accessing dbase, W1 waiting)
- AR = 2, WR = 0, AW = 0, WW = 1

```
Reader() {
    acquire(&lock);
    while ((AW + WW) > 0) { // Is it safe to read?
      WR++;                 // No. Writers exist
      cond_wait(&okToRead,&lock);// Sleep on cond var
      WR--;                 // No longer waiting
    }
    AR++;                   // Now we are active!
    release(&lock);

    AccessDBase(ReadOnly);

    acquire(&lock);
    AR--;
    if (AR == 0 && WW > 0)
      cond_signal(&okToWrite);
    release(&lock);
  }
```

Simulation of Readers/Writers Solution

- R3 comes along (R1 and R2 accessing dbase, W1 waiting)
- AR = 2, WR = 0, AW = 0, WW = 1

```
Reader() {
    acquire(&lock);
    while ((AW + WW) > 0) { // Is it safe to read?
      WR++;                 // No. Writers exist
      cond_wait(&okToRead,&lock);// Sleep on cond var
      WR--;                 // No longer waiting
    }
    AR++;                   // Now we are active!
    release(&lock);

    AccessDBase(ReadOnly);

    acquire(&lock);
    AR--;
    if (AR == 0 && WW > 0)
      cond_signal(&okToWrite);
    release(&lock);
  }
```

Simulation of Readers/Writers Solution

- R3 comes along (R1 and R2 accessing dbase, W1 waiting)
- AR = 2, WR = 1, AW = 0, WW = 1

```
Reader() {
    acquire(&lock);
    while ((AW + WW) > 0) { // Is it safe to read?
      WR++;                 // No. Writers exist
      cond_wait(&okToRead,&lock);// Sleep on cond var
      WR--;                 // No longer waiting
    }
    AR++;                   // Now we are active!
    release(&lock);

    AccessDBase(ReadOnly);

    acquire(&lock);
    AR--;
    if (AR == 0 && WW > 0)
      cond_signal(&okToWrite);
    release(&lock);
  }
```

Simulation of Readers/Writers Solution

- R3 comes along (R1 and R2 accessing dbase, W1 waiting)
- AR = 2, WR = 1, AW = 0, WW = 1

```
Reader() {
    acquire(&lock);
    while ((AW + WW) > 0) { // Is it safe to read?
      WR++;                 // No. Writers exist
      cond_wait(&okToRead,&lock);// Sleep on cond var
      WR--;                 // No longer waiting
    }
    AR++;                   // Now we are active!
    release(&lock);

    AccessDBase(ReadOnly);

    acquire(&lock);
    AR--;
    if (AR == 0 && WW > 0)
      cond_signal(&okToWrite);
    release(&lock);
  }
```

Simulation of Readers/Writers Solution

- R1 and R2 accessing dbase, W1 and R3 waiting
- AR = 2, WR = 1, AW = 0, WW = 1

```
Reader() {
    acquire(&lock);
    while ((AW + WW) > 0) { // Is it safe to read?
      WR++;                 // No. Writers exist
      cond_wait(&okToRead,&lock);// Sleep on cond var
      WR--;                 // No longer waiting
    }
    AR++;                   // Now we are active!
    release(&lock);

    AccessDBase(ReadOnly);

    acquire(&lock);
    AR--;
    if (AR == 0 && WW > 0)
```

Status:

- R1 and R2 still reading
- W1 and R3 waiting on okToWrite and okToRead, respectively

Simulation of Readers/Writers Solution

- R2 finishes (R1 accessing dbase, W1 and R3 waiting)
- AR = 2, WR = 1, AW = 0, WW = 1

```
Reader() {
    acquire(&lock);
    while ((AW + WW) > 0) { // Is it safe to read?
      WR++;                 // No. Writers exist
      cond_wait(&okToRead,&lock);// Sleep on cond var
      WR--;                 // No longer waiting
    }
    AR++;                   // Now we are active!
    release(&lock);

    AccessDBase(ReadOnly);

    acquire(&lock);
    AR--;
    if (AR == 0 && WW > 0)
      cond_signal(&okToWrite);
    release(&lock);
  }
```

Simulation of Readers/Writers Solution

- R2 finishes (R1 accessing dbase, W1 and R3 waiting)
- AR = 1, WR = 1, AW = 0, WW = 1

```
Reader() {
    acquire(&lock);
    while ((AW + WW) > 0) { // Is it safe to read?
      WR++;                 // No. Writers exist
      cond_wait(&okToRead,&lock);// Sleep on cond var
      WR--;                 // No longer waiting
    }
    AR++;                   // Now we are active!
    release(&lock);

    AccessDBase(ReadOnly);

    acquire(&lock);
    AR--;
    if (AR == 0 && WW > 0)
      cond_signal(&okToWrite);
    release(&lock);
  }
```

Simulation of Readers/Writers Solution

- R2 finishes (R1 accessing dbase, W1 and R3 waiting)
- AR = 1, WR = 1, AW = 0, WW = 1

```
Reader() {
    acquire(&lock);
    while ((AW + WW) > 0) { // Is it safe to read?
      WR++;                 // No. Writers exist
      cond_wait(&okToRead,&lock);// Sleep on cond var
      WR--;                 // No longer waiting
    }
    AR++;                   // Now we are active!
    release(&lock);

    AccessDBase(ReadOnly);

    acquire(&lock);
    AR--;
    if (AR == 0 && WW > 0)
      cond_signal(&okToWrite);
    release(&lock);
  }
```

Simulation of Readers/Writers Solution

- R2 finishes (R1 accessing dbase, W1 and R3 waiting)
- AR = 1, WR = 1, AW = 0, WW = 1

```
Reader() {
    acquire(&lock);
    while ((AW + WW) > 0) { // Is it safe to read?
      WR++;                 // No. Writers exist
      cond_wait(&okToRead,&lock);// Sleep on cond var
      WR--;                 // No longer waiting
    }
    AR++;                   // Now we are active!
    release(&lock);

    AccessDBase(ReadOnly);

    acquire(&lock);
    AR--;
    if (AR == 0 && WW > 0)
      cond_signal(&okToWrite);
    release(&lock);
  }
```

Simulation of Readers/Writers Solution

- R1 finishes (W1 and R3 waiting)
- AR = 1, WR = 1, AW = 0, WW = 1

```
Reader() {
    acquire(&lock);
    while ((AW + WW) > 0) { // Is it safe to read?
      WR++;                 // No. Writers exist
      cond_wait(&okToRead,&lock);// Sleep on cond var
      WR--;                 // No longer waiting
    }
    AR++;                   // Now we are active!
    release(&lock);

    AccessDBase(ReadOnly);

    acquire(&lock);
    AR--;
    if (AR == 0 && WW > 0)
      cond_signal(&okToWrite);
    release(&lock);
  }
```

Simulation of Readers/Writers Solution

- R1 finishes (W1 and R3 waiting)
- AR = 0, WR = 1, AW = 0, WW = 1

```
Reader() {
    acquire(&lock);
    while ((AW + WW) > 0) { // Is it safe to read?
      WR++;                 // No. Writers exist
      cond_wait(&okToRead,&lock);// Sleep on cond var
      WR--;                 // No longer waiting
    }
    AR++;                   // Now we are active!
    release(&lock);

    AccessDBase(ReadOnly);

    acquire(&lock);
    AR--;
    if (AR == 0 && WW > 0)
      cond_signal(&okToWrite);
    release(&lock);
  }
```

Simulation of Readers/Writers Solution

- R1 finishes (W1 and R3 waiting)
- AR = 0, WR = 1, AW = 0, WW = 1

```
Reader() {
    acquire(&lock);
    while ((AW + WW) > 0) { // Is it safe to read?
      WR++;                 // No. Writers exist
      cond_wait(&okToRead,&lock);// Sleep on cond var
      WR--;                 // No longer waiting
    }
    AR++;                   // Now we are active!
    release(&lock);

    AccessDBase(ReadOnly);

    acquire(&lock);
    AR--;
    if (AR == 0 && WW > 0)
      cond_signal(&okToWrite);
    release(&lock);
  }
```

Simulation of Readers/Writers Solution

- R1 signals a writer (W1 and R3 waiting)
- AR = 0, WR = 1, AW = 0, WW = 1

```
Reader() {
    acquire(&lock);
    while ((AW + WW) > 0) { // Is it safe to read?
      WR++;                 // No. Writers exist
      cond_wait(&okToRead,&lock);// Sleep on cond var
      WR--;                 // No longer waiting
    }
    AR++;                   // Now we are active!
    release(&lock);

    AccessDBase(ReadOnly);

    acquire(&lock);
    AR--;
    if (AR == 0 && WW > 0)
      cond_signal(&okToWrite);
    release(&lock);
  }
```

Simulation of Readers/Writers Solution

- W1 gets signal (R3 still waiting)
- AR = 0, WR = 1, AW = 0, WW = 1

```
Writer() {
    acquire(&lock);
    while ((AW + AR) > 0) {  // Is it safe to write?
      WW++;                  // No. Active users exist
      cond_wait(&okToWrite,&lock);// Sleep on cond var
      WW--;                  // No longer waiting
    }
    AW++;
    release(&lock);

    AccessDBase(ReadWrite);


    acquire(&lock);
    AW--;
    if (WW > 0){
      cond_signal(&okToWrite);
    } else_if (WR > 0) {
      cond_broadcast(&okToRead);
    }
    release(&lock);
  }
```

Simulation of Readers/Writers Solution

- W1 gets signal (R3 still waiting)
- AR = 0, WR = 1, AW = 0, WW = 0

```
Writer() {
    acquire(&lock);
    while ((AW + AR) > 0) {  // Is it safe to write?
       WW++;                 // No. Active users exist
       cond_wait(&okToWrite,&lock);// Sleep on cond var
       WW--;                 // No longer waiting
    }
    AW++;
    release(&lock);

    AccessDBase(ReadWrite);


    acquire(&lock);
    AW--;
    if (WW > 0){
       cond_signal(&okToWrite);
    } else_if (WR > 0) {
       cond_broadcast(&okToRead);
    }
    release(&lock);
  }
```

Simulation of Readers/Writers Solution

- W1 gets signal (R3 still waiting)
- AR = 0, WR = 1, AW = 1, WW = 0

```
Writer() {
    acquire(&lock);
    while ((AW + AR) > 0) {  // Is it safe to write?
       WW++;                 // No. Active users exist
       cond_wait(&okToWrite,&lock);// Sleep on cond var
       WW--;                 // No longer waiting
    }
    AW++;
    release(&lock);

    AccessDBase(ReadWrite);


    acquire(&lock);
    AW--;
    if (WW > 0){
       cond_signal(&okToWrite);
    } else_if (WR > 0) {
       cond_broadcast(&okToRead);
    }
    release(&lock);
  }
```

Simulation of Readers/Writers Solution

- W1 accessing dbase (R3 still waiting)
- AR = 0, WR = 1, AW = 1, WW = 0

```
Writer() {
    acquire(&lock);
    while ((AW + AR) > 0) {  // Is it safe to write?
       WW++;                 // No. Active users exist
       cond_wait(&okToWrite,&lock);// Sleep on cond var
       WW--;                 // No longer waiting
    }
    AW++;
    release(&lock);

    AccessDBase(ReadWrite);

    acquire(&lock);
    AW--;
    if (WW > 0){
       cond_signal(&okToWrite);
    } else_if (WR > 0) {
       cond_broadcast(&okToRead);
    }
    release(&lock);
  }
```

Simulation of Readers/Writers Solution

- W1 finishes (R3 still waiting)
- AR = 0, WR = 1, AW = 1, WW = 0

```
Writer() {
    acquire(&lock);
    while ((AW + AR) > 0) {  // Is it safe to write?
       WW++;                 // No. Active users exist
       cond_wait(&okToWrite,&lock);// Sleep on cond var
       WW--;                 // No longer waiting
    }
    AW++;
    release(&lock);

    AccessDBase(ReadWrite);

    acquire(&lock);
    AW--;
    if (WW > 0){
       cond_signal(&okToWrite);
    } else_if (WR > 0) {
       cond_broadcast(&okToRead);
    }
    release(&lock);
  }
```

Simulation of Readers/Writers Solution

- W1 finishes (R3 still waiting)
- AR = 0, WR = 1, AW = 0, WW = 0

```
Writer() {
    acquire(&lock);
    while ((AW + AR) > 0) {  // Is it safe to write?
       WW++;                 // No. Active users exist
       cond_wait(&okToWrite,&lock);// Sleep on cond var
       WW--;                 // No longer waiting
    }
    AW++;
    release(&lock);

    AccessDBase(ReadWrite);

    acquire(&lock);
    AW--;
    if (WW > 0){
       cond_signal(&okToWrite);
    } else_if (WR > 0) {
       cond_broadcast(&okToRead);
    }
    release(&lock);
  }
```

Simulation of Readers/Writers Solution

- W1 finishes (R3 still waiting)
- AR = 0, WR = 1, AW = 0, WW = 0

```
Writer() {
    acquire(&lock);
    while ((AW + AR) > 0) {  // Is it safe to write?
       WW++;                 // No. Active users exist
       cond_wait(&okToWrite,&lock);// Sleep on cond var
       WW--;                 // No longer waiting
    }
    AW++;
    release(&lock);

    AccessDBase(ReadWrite);


    acquire(&lock);
    AW--;
    if (WW > 0){
       cond_signal(&okToWrite);
    } else_if (WR > 0) {
       cond_broadcast(&okToRead);
    }
    release(&lock);
  }
```

Simulation of Readers/Writers Solution

- W1 signaling readers (R3 still waiting)
- AR = 0, WR = 1, AW = 0, WW = 0

```
Writer() {
    acquire(&lock);
    while ((AW + AR) > 0) {  // Is it safe to write?
       WW++;                 // No. Active users exist
       cond_wait(&okToWrite,&lock);// Sleep on cond var
       WW--;                 // No longer waiting
    }
    AW++;
    release(&lock);

    AccessDBase(ReadWrite);


    acquire(&lock);
    AW--;
    if (WW > 0){
       cond_signal(&okToWrite);
    } else if (WR > 0) {
       cond_broadcast(&okToRead);
    }
    release(&lock);
  }
```

Simulation of Readers/Writers Solution

- R3 gets signal (no waiting threads)
- AR = 0, WR = 1, AW = 0, WW = 0

```
Reader() {
    acquire(&lock);
    while ((AW + WW) > 0) { // Is it safe to read?
      WR++;                 // No. Writers exist
      cond_wait(&okToRead,&lock);// Sleep on cond var
      WR--;                 // No longer waiting
    }
    AR++;                   // Now we are active!
    release(&lock);

    AccessDBase(ReadOnly);

    acquire(&lock);
    AR--;
    if (AR == 0 && WW > 0)
      cond_signal(&okToWrite);
    release(&lock);
  }
```

Simulation of Readers/Writers Solution

- R3 gets signal (no waiting threads)
- AR = 0, WR = 0, AW = 0, WW = 0

```
Reader() {
    acquire(&lock);
    while ((AW + WW) > 0) { // Is it safe to read?
      WR++;                 // No. Writers exist
      cond_wait(&okToRead,&lock);// Sleep on cond var
      WR--;                 // No longer waiting
    }
    AR++;                   // Now we are active!
    release(&lock);

    AccessDBase(ReadOnly);

    acquire(&lock);
    AR--;
    if (AR == 0 && WW > 0)
      cond_signal(&okToWrite);
    release(&lock);
  }
```

Simulation of Readers/Writers Solution

- R3 accessing dbase (no waiting threads)
- AR = 1, WR = 0, AW = 0, WW = 0

```
Reader() {
    acquire(&lock);
    while ((AW + WW) > 0) { // Is it safe to read?
      WR++;                 // No. Writers exist
      cond_wait(&okToRead,&lock);// Sleep on cond var
      WR--;                 // No longer waiting
    }
    AR++;                   // Now we are active!
    release(&lock);

    AccessDBase(ReadOnly);

    acquire(&lock);
    AR--;
    if (AR == 0 && WW > 0)
      cond_signal(&okToWrite);
    release(&lock);
  }
```

Simulation of Readers/Writers Solution

- R3 finishes (no waiting threads)
- AR = 1, WR = 0, AW = 0, WW = 0

```
Reader() {
    acquire(&lock);
    while ((AW + WW) > 0) { // Is it safe to read?
      WR++;                 // No. Writers exist
      cond_wait(&okToRead,&lock);// Sleep on cond var
      WR--;                 // No longer waiting
    }
    AR++;                   // Now we are active!
    release(&lock);

    AccessDBase(ReadOnly);

    acquire(&lock);
    AR--;
    if (AR == 0 && WW > 0)
      cond_signal(&okToWrite);
    release(&lock);
  }
```

Simulation of Readers/Writers Solution

- R3 finishes (no waiting threads)
- AR = 0, WR = 0, AW = 0, WW = 0

```
Reader() {
    acquire(&lock);
    while ((AW + WW) > 0) { // Is it safe to read?
      WR++;                 // No. Writers exist
      cond_wait(&okToRead,&lock);// Sleep on cond var
      WR--;                 // No longer waiting
    }
    AR++;                   // Now we are active!
    release(&lock);

    AccessDbase(ReadOnly);

    acquire(&lock);
    AR--;
    if (AR == 0 && WW > 0)
      cond_signal(&okToWrite);
    release(&lock);
  }
```

Group Discussion

- Can readers starve? Consider Reader() entry code:

```
while ((AW + WW) > 0) { // Is it safe to read?
   WR++;                // No. Writers exist
   cond_wait(&okToRead,&lock);// Sleep on cond var
   WR--;                // No longer waiting
}
AR++;                   // Now we are active!
```

- What if we erase the condition check in Reader exit?

```
AR--;                   // No longer active
if (AR == 0 && WW > 0)  // No other active readers
   cond_signal(&okToWrite);// Wake up one writer
```

- Further, what if we turn the signal() into broadcast()

```
AR--;                   // No longer active
cond_broadcast(&okToWrite); // Wake up sleepers
```

- Finally, what if we use only one condition variable (call it "**okContinue**") instead of two separate ones?
  - Both readers and writers sleep on this variable
  - Must use broadcast() instead of signal()

Use of Single CV: `okContinue`

```
Reader() {
    // check into system
    acquire(&lock);
    while ((AW + WW) > 0) {
       WR++;
       cond_wait(&okContinue,&lock);
       WR--;
    }
    AR++;
    release(&lock);

    // read-only access
    AccessDbase(ReadOnly);

    // check out of system
    acquire(&lock);
    AR--;
    if (AR == 0 && WW > 0)
       cond_signal(&okContinue);
    release(&lock);
  }
```

```
Writer() {
    // check into system
    acquire(&lock);
    while ((AW + AR) > 0) {
       WW++;
       cond_wait(&okContinue,&lock);
       WW--;
    }
    AW++;
    release(&lock);

    // read/write access
    AccessDbase(ReadWrite);

    // check out of system
    acquire(&lock);
    AW--;
    if (WW > 0){
       cond_signal(&okContinue);
    } else if (WR > 0) {
       cond_broadcast(&okContinue);
    }
    release(&lock);
}
```

What if we turn `okToWrite` and `okToRead` into `okContinue` (i.e. use only one condition variable instead of two)?

Use of Single CV: `okContinue`

```
Reader() {
    // check into system
    acquire(&lock);
    while ((AW + WW) > 0) {
       WR++;
       cond_wait(&okContinue,&lock);
       WR--;
    }
    AR++;
    release(&lock);

    // read-only access
    AccessDbase(ReadOnly);

    // check out of system
    acquire(&lock);
    AR--;
    if (AR == 0 && WW > 0)
       cond_signal(&okContinue);
    release(&lock);
  }
```

```
Writer() {
    // check into system
    acquire(&lock);
    while ((AW + AR) > 0) {
       WW++;
       cond_wait(&okContinue,&lock);
       WW--;
    }
    AW++;
    release(&lock);

    // read/write access
    AccessDbase(ReadWrite);

    // check out of system
    acquire(&lock);
    AW--;
    if (WW > 0){
       cond_signal(&okContinue);
    } else if (WR > 0) {
       cond_broadcast(&okContinue);
    }
```

Consider this scenario:

- **R1 arrives**
- **W1, R2 arrive while R1 still reading → W1 and R2 wait for R1 to finish**
- **Assume R1's signal is delivered to R2 (not W1)**

Use of Single CV: `okContinue`

```
Reader() {
    // check into system
    acquire(&lock);
    while ((AW + WW) > 0) {
       WR++;
        cond_wait(&okContinue,&lock);
       WR--;
    }
    AR++;
    release(&lock);

    // read-only access
    AccessDbase(ReadOnly);

    // check out of system
    acquire(&lock);
    AR--;
    if (AR == 0 && WW > 0)
       cond_broadcast(&okContinue);
    release(&lock);
  }
```

Need to change to `broadcast()`!

```
Writer() {
    // check into system
    acquire(&lock);
    while ((AW + AR) > 0) {
       WW++;
       cond_wait(&okContinue,&lock);
    WW--;
    }
    AW++;
    release(&lock);

    // read/write access
    AccessDbase(ReadWrite);

    // check out of system
    acquire(&lock);
    AW--;
    if (WW > 0 || WR > 0){
       cond_broadcast(&okContinue);
    }
    release(&lock);
  }
```

Must `broadcast()` to sort things out!

Can we construct Monitors from Semaphores?

- Locking aspect is easy: Just use a mutex
- Can we implement condition variables this way?

```
Wait(Semaphore *thesema)   { semaP(thesema); }
Signal(Semaphore *thesema) { semaV(thesema); }
```

- Does this work better?

```
Wait(Lock *thelock, Semaphore *thesema) {
   release(thelock);
   semaP(thesema);
   acquire(thelock);
}
Signal(Semaphore *thesema) {
  semaV(thesema);
}
```

  – No: Condition vars have no history, semaphores have history:
    » What if thread signals and no one is waiting?
    » What if thread later waits?
    » What if thread V's and no one is waiting?
    » What if thread later does P?

Construction of Monitors from Semaphores (con't)

- Problem with previous try:
  - P and V are commutative – result is the same no matter what order they occur
  - Condition variables are NOT commutative
- Does this fix the problem?

```
Wait(Lock *thelock, Semaphore *thesema) {
   release(thelock);
   semaP(thesema);
   acquire(thelock);
}
Signal(Semaphore *thesema) {
   if semaphore queue is not empty
      semaV(thesema);
}
```

  - Not legal to look at contents of semaphore queue
  - There is a race condition – signaler can slip in after lock release and before waiter executes semaphore.P()
- It is actually possible to do this correctly
  - Complex solution in book

Mesa Monitor Conclusion

- Monitors represent the synchronization logic of the program
  - Wait if necessary
  - Signal when change something so any waiting threads can proceed
- Typical structure of monitor-based program:

```
lock
while (need to wait) {
   condvar.wait();
}
unlock

do something so no need to wait

lock

condvar.signal();

unlock
```

Check and/or update state variables
Wait if necessary

Check and/or update state variables

C-Language Support for Synchronization

- C language: Pretty straightforward synchronization
  - Just make sure you know *all* the code paths out of a critical section

```
int Rtn() {
   acquire(&lock);
   …
   if (exception) {
      release(&lock);
      return errReturnCode;
   }
   …
   release(&lock);
   return OK;
}
```

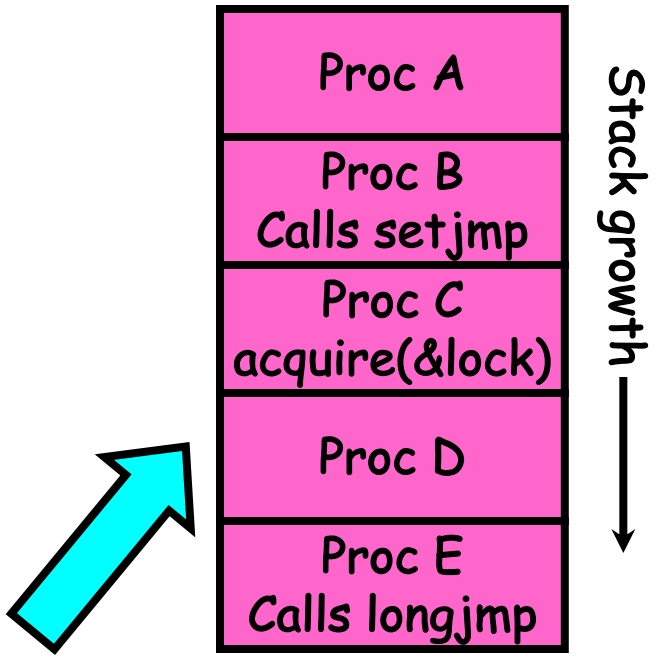

  - Watch out for `setjmp`/`longjmp`!
    - » Can cause a non-local jump out of procedure
    - » In example, procedure E calls longjmp, poping stack back to procedure B
    - » If Procedure C had lock.acquire, problem!

Concurrency and Synchronization in C

- Harder with more locks

```
void Rtn() {
  lock1.acquire();
  …
  if (error) {
    lock1.release();
    return;
  }
  …
  lock2.acquire();
  …
  if (error) {
    lock2.release()
    lock1.release();
    return;
  }
  …
  lock2.release();
  lock1.release();
}
```

- Is goto a solution???

```
void Rtn() {
  lock1.acquire();
  …
  if (error) {
    goto release_lock1_and_return;
  }
  …
  lock2.acquire();
  …
  if (error) {
    goto release_both_and_return;
  }
  …
release_both_and_return:
  lock2.release();
release_lock1_and_return:
  lock1.release();
}
```

C++ Language Support for Synchronization

- Languages with exceptions like C++
  - Languages that support exceptions are problematic (easy to make a non-local exit without releasing lock)
  - Consider:

```
void Rtn() {
   lock.acquire();
   …
   DoFoo();
   …
   lock.release();
}
void DoFoo() {
   …
   if (exception) throw errException;
   …
}
```

  - Notice that an exception in DoFoo() will exit without releasing the lock!

C++ Language Support for Synchronization (con't)

- Must catch all exceptions in critical sections
  - Catch exceptions, release lock, and re-throw exception:

```
void Rtn() {
   lock.acquire();
   try {
      …
      DoFoo();
      …
   } catch (…) {        // catch exception
      lock.release();   // release lock
      throw;            // re-throw the exception
   }
   lock.release();
}
void DoFoo() {
   …
   if (exception) throw errException;
   …
}
```

Much better: C++ Lock Guards

```
#include <mutex>
int global_i = 0;
std::mutex global_mutex;

void safe_increment() {
  std::lock_guard<std::mutex> lock(global_mutex);
  …
  global_i++;
  // Mutex released when ‘lock’ goes out of scope
}
```

Python `with` Keyword

- More versatile than we show here (can be used to close files, database connections, etc.)

```
lock = threading.Lock()
…
with lock: # Automatically calls acquire()
  some_var += 1
  …
# release() called however we leave block
```

Java synchronized Keyword

- Every Java object has an associated lock:
  - Lock is acquired on entry and released on exit from a synchronized method
  - Lock is properly released if exception occurs inside a synchronized method
  - Mutex execution of synchronized methods

```
class Account {
   private int balance;

   // object constructor
   public Account (int initialBalance) {
      balance = initialBalance;
   }
   public synchronized int getBalance() {
      return balance;
   }
   public synchronized void deposit(int amount) {
      balance += amount;
   }
}
```

Java Support for Monitors

- Along with a lock, every object has a single condition variable associated with it

- To wait inside a synchronized method:
  - `void wait();`
  - `void wait(long timeout);`

- To signal while in a synchronized method:
  - `void notify();`
  - `void notifyAll();`

(OSDI 06) The Chubby lock service for loosely-coupled distributed systems

- Lock service
- Loosely-coupled distributed system
  - Coarse-grained synchronization
- UNIX-like file system interface
- Availability and reliability
- Open-source counterparts: Apache ZooKeeper, etcd

> "Building Chubby was an engineering effort required to fill the needs mentioned above; it was not research. We claim no new algorithms or techniques. The purpose of this paper is to describe what we did and why, rather than to advocate it. "

Conclusion

- Monitors: A lock plus one or more condition variables
  - Always acquire lock before accessing shared data
  - Use condition variables to wait inside critical section
    - » Three Operations: `Wait()`, `Signal()`, and `Broadcast()`
- Monitors represent the logic of the program
  - Wait if necessary
  - Signal when change something so any waiting threads can proceed
  - Monitors supported natively in a number of languages
- Readers/Writers Monitor example
  - Shows how monitors allow sophisticated controlled entry to protected code