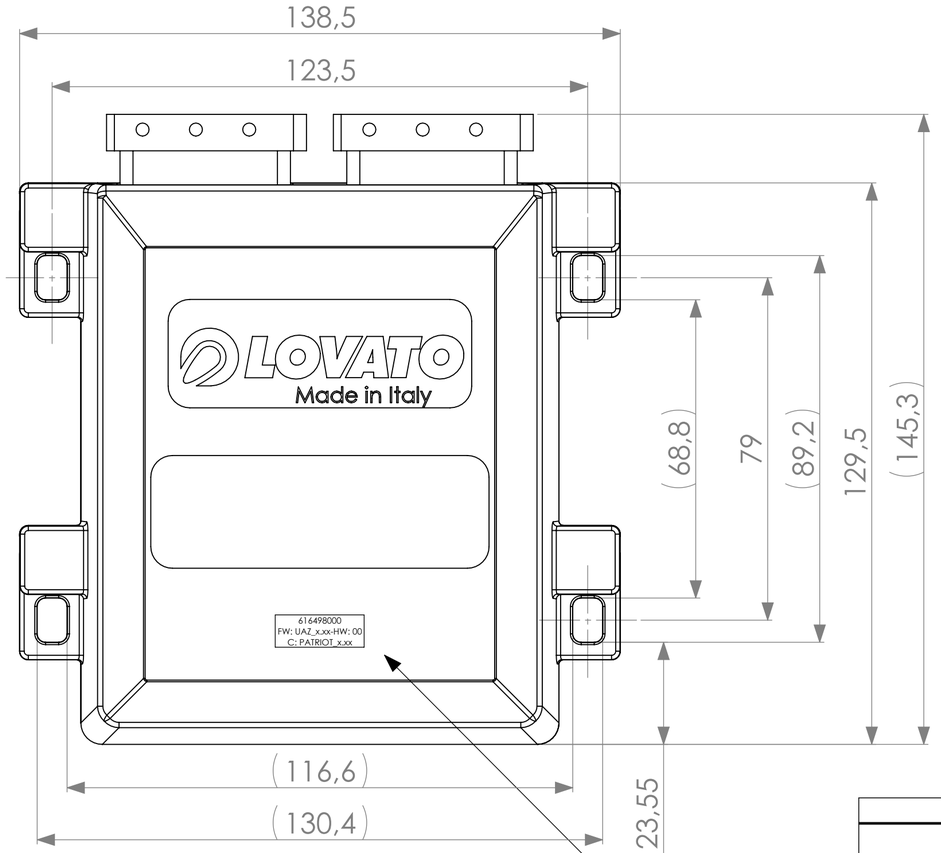

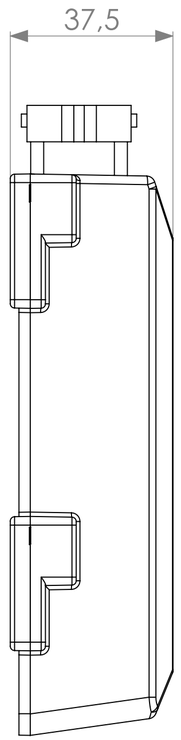

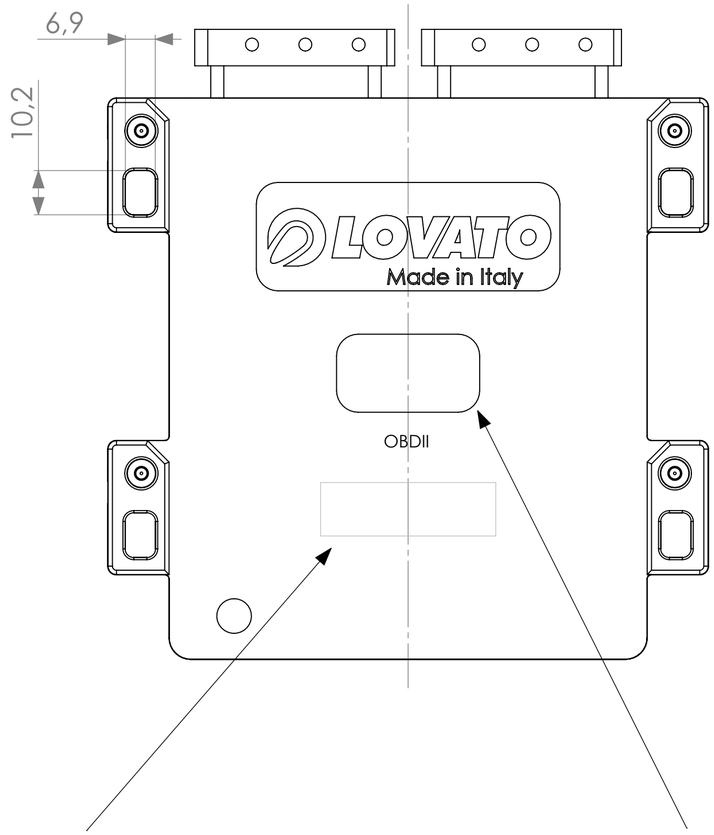

LOVATO code
Firmware / Hardware
Configuration

BLACK CONNECTOR GREY CONNECTOR

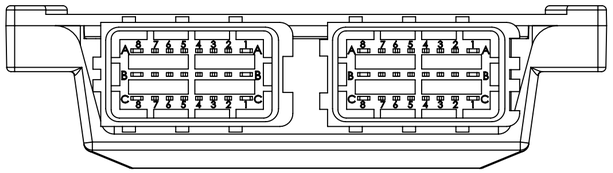

BLACK CONNECTOR PINOUT

PIN	DESCRIPTION	PIN	DESCRIPTION	PIN	DESCRIPTION
1A	+12 BATTERY	1B	GND	1C	OUT. GAS SHUT OFF VALVE REDUCER / CUT-OFF
2A	SERIAL POWER SUPPLY (+12V)	2B	SERIAL GND	2C	GND SHUT OFF VALVE REDUCER / CUT-OFF
3A	SERIAL TX	3B	SERIAL RX	3C	GND TEMPERATURE SENSOR E LEVEL SENSOR
4A	LEVEL SENSOR	4B	PULL-UP SENSOR 0-90 LPG	4C	REDUCER TEMPERATURE SENSOR
5A	SWITCH BUTTOM	5B	SWITCH GND	5C	GAS TEMPERATURE SENSOR
6A	SWITCH SERIAL COMMUNICATION	6B	+5V SWITCH POWER SUPPLY	6C	CAN-L (OPTIONAL)
7A	RPM INPUT	7B	-	7C	LAMBDA 1 OUT
8A	CAN-H (OPTIONAL)	8B	-	8C	LAMBDA 1 IN

GREY CONNECTOR PINOUT

PIN	DESCRIPTION	PIN	DESCRIPTION	PIN	DESCRIPTION
1A	POSITIVE IN GAS 3	1B	POSITIVE IN GAS 2	1C	POSITIVE IN GAS 1
2A	NEGATIVE INJ GAS 4	2B	NEGATIVE INJ GAS 1	2C	POSITIVE IN GAS 4
3A	NEGATIVE INJ GAS 3	3B	NEGATIVE INJ GAS 2	3C	E.C.U. INJ 2 EMULATION IN
4A	INJ 1 EMULATION OUT	4B	E.C.U. INJ 1 EMULATION IN	4C	INJ 2 EMULATION OUT
5A	INJ 4 EMULATION OUT	5B	E.C.U. INJ 3 EMULATION IN	5C	INJ 3 EMULATION OUT
6A	E.C.U. INJ 4 EMULATION IN	6B	MANIFOLD ABSULTE PRESSURE	6C	POWER SUPPLY PRESSURE SENSOR
7A	12V KEY	7B	INJECTION PRESSURE SENSOR	7C	GND PRESSURE SENSOR
8A	REAR E.V. OUT GAS	8B	K-LINE	8C	REAR EV GROUND

TECHNICAL CARACTERISTICS

Dimensions	Lenght : see drawing
	Width : see drawing
	Height : see drawing
	Weight : 480 g
Connector type FCI Sicma	BLACK: PartNo 211PC249S0033
	GREY: PartNo 211PC2498033
Operating conditions	Power supply : 10 ~ 16 V
	Consumption Power On : 150 mA
	Consumption Key Off : 45 mA
	Standby Consumption : 5 µA
	Operating Temperature : -40 ~105 °C
IP Protection Level	IP Grade 57
Inputs	12V battery/Key
	Gas Pressure : 0~5V / 0~400KPa
	MAP Pressure : 0~5V / 0~250KPa
	Gas Temperature : NTC Std
	Water Temperature : NTC Std
	Lambda Probe : 0~1V / 0~5V
	RPM : Tachometer
	Level Sensor: resistive sensor
	Injectors : Cmos
Outputs	12 V Gas Services
	Pressure Sensors 5V Power Supply
	Level Indicator 5V Power Supply
	Gas Injector 12V Power Supply
	Petrol Injector Emulator 150 Ω
Communication	TTL / 9600 / +12V Power
	CAN
	KLINE
Regulation Accordance	R67-01
	R110-00
	2006/28/CE
Temperature storage range	min -40°C; max 130°C

Forn: 01 Cod:xxxxxxx Rev:xx

N/l:xx/xx/xx S/n:xxxxx

Data: xx/xx/xx

LOVATO
E13 67 R-010249
110R-000078
e 13 032094
Type: SECU

LAVAGGIO DEI PEZZI
ESENTE DA BAVE DOPO LA LAVORAZIONE

REV.n°	DESCRIZIONE MODIFICA / DESCRIPTION OF MODIFICATION	DATA MODIFICA MOD. DATE	DIS. MODIFICA MODIFIED BY
0	...	_	gg/mm/aaaa

C	Caratteristica controllata al 100% / Characteristic 100% cheked	CARATTERISTICHE SPECIALI SPECIAL CHARACTERISTICS	TRATTAMENTO SUPERFICIALE E-O TERMICO / SURFACE AND-OR HEAT TREATMENT —
Q+	Ppk ≥ 1,67 Cpk≥ 1,33		RUGOSITA' Ra IN MICRON / SURFACE ROUGNESS IN MICRON 0,8 1,6 3,2
Q-	Ppk ≥ 1,67; Controllo a campione in produzione Ppk ≥ 1,67; Sampling check in mass production		

RAGGI NON QUOTATI / NOT DIMENSIONED RADIUS 0.2 mm
SMUSSI NON QUOTATI / NOT DIMENSIONED CHAMFER 0.5x45°
QUOTE SENZA INDICAZIONE DI TOLLERANZA / DIMENSION WHITOUT TOLLERANCE INDICATION: ISO 2768-mK; alberi: h12, fori: H12, filetti: 6g - 6H
MATERIALE / MATERIAL: —
SCALA / SCALE 1:1
FORMATO / D.S.S. A2

LOVATO
A NORMA DELLE VIGENTI LEGGI IL DISEGNO NON PUO' ESSERE COPIATO,RIPRODOTTO,TRASMESSO A TERZI SENZA PREVENTIVA AUTORIZZAZIONE
ACCORDING TO THE LAWS IN FORCE THE DRAWING CANNOT BE COPIED,REPRODUCED OR SENT WHITOUT AUTHORIZATION IN ADVANCE.

DESCRIZIONE / DESCRIPTION
ECU EASY FAST 4 CIL. OBDII UAZ PATRIOT

	DISEGNATORE / DRAWN BY	APPROVATORE / APPROVED BY	ANALISI DI MODIFICA	CODICE / CODE	REV.
DATA / DATE	22/02/2010	22/02/2010	06287	616498000	0
FIRMA / SIGN	FORTUNATO F.	ING. GRITTI GUIDO			