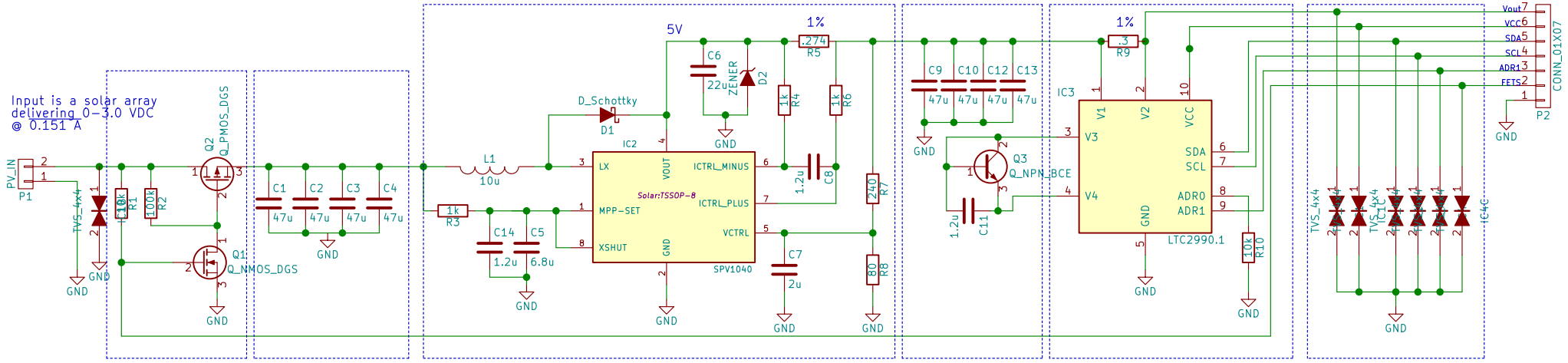

These Fets act as a more robust shut-down than XShut.

Input filter caps designed for 10mV ripple voltage.

SPV1040
Maximum Power Point Tracker
Voltage set to 5V.

Output Filter Caps
Set for 10mV ripple.

LTC2990
Temperature, Voltage and Current Monitor
I2C designed on a bus.
LTC2990 should be powered down when not being sourced by AtMega.

TVS Diode Array
2 packages TVS diodes tied to ground Vbr 6V

TODO
-NMOS can be small
-PMOS need to handle 1 amp
-Very good notes please
-Assign TVS to diode symbols on schema,
--find out how to assign to parts of ic's
--NUP4202W1_4INPUT_TVS

Andrew Greenberg
Austin Joseph
Portland State Aerospace Society

Sheet: /
File: Solar_Array_Rev1.sch

Title: Cubesat Power System

Size: A4	Date: 2016-03-29	Rev: Rev 1.0
KiCad E.D.A. kicad 4.0.2+dfsg1-stable		Id: 1/1