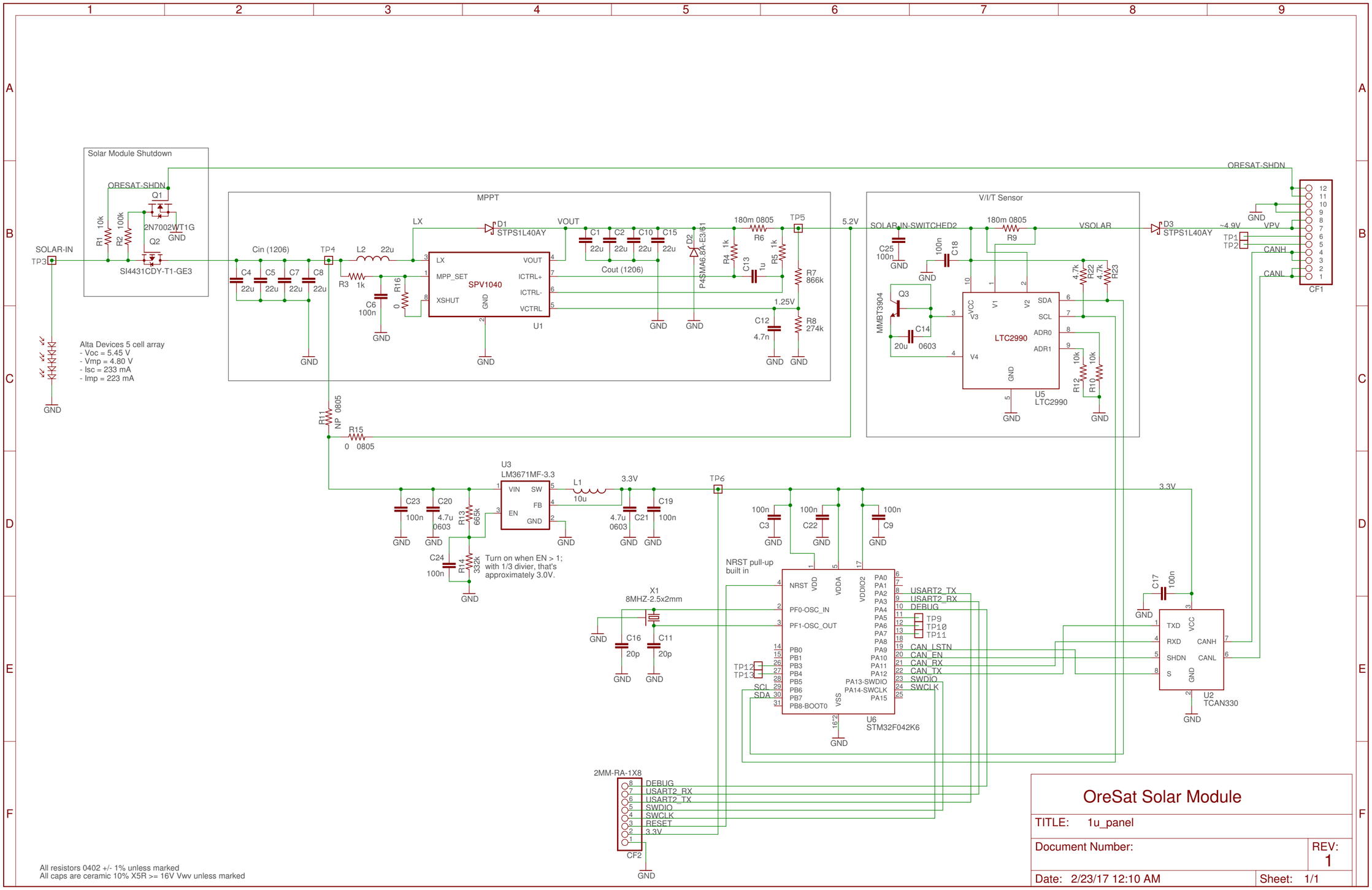
Solar Module Shutdown
ORESAT-SHDN
Q1
2N7002WT1G
Q2
SI4431CDY-T1-GE3
R1 10k
R2 100k
GND
SOLAR-IN
TP3
Alta Devices 5 cell array
- Voc = 5.45 V
- Vmp = 4.80 V
- Isc = 233 mA
- Imp = 223 mA
MPPT
Cin (1206)
C4 22u
C5 22u
C7 22u
C8 22u
TP4
L2 22u
R3 1k
C6 100n
R16 0
LX
D1 STPS1L40AY
SPV1040
MPP_SET
XSHUT
VOUT
ICTRL+
ICTRL-
VCTRL
U1
C1 22u
C2 22u
C10 22u
C15 22u
Cout (1206)
D2 P4SMA6.8A-E3/61
180m 0805 R6
R4 1k
C13 1u
R5 1k
TP5
R7 866k
1.25V
C12 4.7n
R8 274k
5.2V
R11 NP 0805
R15 0 0805
V/I/T Sensor
SOLAR-IN-SWITCHED2
C25 100n
C18 100n
180m 0805 R9
VSOLAR
Q3 MMBT3904
C14 20u 0603
LTC2990
U5 LTC2990
R22 4.7k
R23 4.7k
R12 10k
R10 10k
D3 STPS1L40AY
~4.9V
VPV
TP1
TP2
CANH
CANL
CF1
U3 LM3671MF-3.3
VIN
SW
FB
EN
GND
L1 10u
3.3V
TP6
C23 100n
C20 4.7u 0603
R13 665k
C24 100n
R14 332k
Turn on when EN > 1; with 1/3 divier, that's approximately 3.0V.
C21 4.7u 0603
C19 100n
C3 100n
C22 100n
C9 100n
NRST pull-up built in
X1 8MHZ-2.5x2mm
C16 20p
C11 20p
NRST
VDD
VDDA
VDDIO2
PF0-OSC_IN
PF1-OSC_OUT
PB0
PB1
PB3
PB4
PB5
PB6
PB7
PB8-BOOT0
VSS
PA0
PA1
PA2
PA3
PA4
PA5
PA6
PA7
PA8
PA9
PA10
PA11
PA12
PA13-SWDIO
PA14-SWCLK
PA15
USART2_TX
USART2_RX
DEBUG
TP9
TP10
TP11
CAN_LSTN
CAN_EN
CAN_RX
CAN_TX
SWDIO
SWCLK
TP12
TP13
SCL
SDA
U6 STM32F042K6
16*2
C17 100n
TXD
RXD
SHDN
S
VCC
CANH
CANL
U2 TCAN330
2MM-RA-1X8
DEBUG
USART2_RX
USART2_TX
SWDIO
SWCLK
RESET
3.3V
CF2
All resistors 0402 +/- 1% unless marked
All caps are ceramic 10% X5R >= 16V Vwv unless marked
OreSat Solar Module
TITLE: 1u_panel
Document Number:
REV: 1
Date: 2/23/17 12:10 AM
Sheet: 1/1