MITSUBISHI ELECTRIC

General-Purpose AC Servo

MITSUBISHI SERVO AMPLIFIERS & MOTORS

MELSERVO-J4

Multi-network Interface AC Servo

MODEL

MR-J4-_TM_

SERVO AMPLIFIER
INSTRUCTION MANUAL

F

● Safety Instructions ●

Please read the instructions carefully before using the equipment.

To use the equipment correctly, do not attempt to install, operate, maintain, or inspect the equipment until you have read through this Instruction Manual, Installation guide, and appended documents carefully. Do not use the equipment until you have a full knowledge of the equipment, safety information and instructions.
In this Instruction Manual, the safety instruction levels are classified into "WARNING" and "CAUTION".

⚠ WARNING	Indicates that incorrect handling may cause hazardous conditions, resulting in death or severe injury.
⚠ CAUTION	Indicates that incorrect handling may cause hazardous conditions, resulting in medium or slight injury to personnel or may cause physical damage.

Note that the CAUTION level may lead to a serious consequence according to conditions.
Please follow the instructions of both levels because they are important to personnel safety.
What must not be done and what must be done are indicated by the following diagrammatic symbols.

⃠	Indicates what must not be done. For example, "No Fire" is indicated by .
●	Indicates what must be done. For example, grounding is indicated by .

In this Instruction Manual, instructions at a lower level than the above, instructions for other functions, and so on are classified into "POINT".
After reading this Instruction Manual, keep it accessible to the operator.

1. To prevent electric shock, note the following

⚠ WARNING

- Before wiring and inspections, turn off the power and wait for 15 minutes or more until the charge lamp turns off. Then, confirm that the voltage between P+ and N- is safe with a voltage tester and others. Otherwise, an electric shock may occur. In addition, when confirming whether the charge lamp is off or not, always confirm it from the front of the servo amplifier.
- Ground the servo amplifier and servo motor securely.
- Any person who is involved in wiring and inspection should be fully competent to do the work.
- Do not attempt to wire the servo amplifier and servo motor until they have been installed. Otherwise, it may cause an electric shock.
- Do not operate switches with wet hands. Otherwise, it may cause an electric shock.
- The cables should not be damaged, stressed, loaded, or pinched. Otherwise, it may cause an electric shock.
- During power-on or operation, do not open the front cover of the servo amplifier. Otherwise, it may cause an electric shock.
- Do not operate the servo amplifier with the front cover removed. High-voltage terminals and charging area are exposed and you may get an electric shock.
- Except for wiring and periodic inspection, do not remove the front cover of the servo amplifier even if the power is off. The servo amplifier is charged and you may get an electric shock.
- To prevent an electric shock, always connect the protective earth (PE) terminal (marked ⏚) of the servo amplifier to the protective earth (PE) of the cabinet.
- To avoid an electric shock, insulate the connections of the power supply terminals.

2. To prevent fire, note the following

⚠ CAUTION

- Install the servo amplifier, servo motor, and regenerative resistor on incombustible material. Installing them directly or close to combustibles will lead to smoke or a fire.
- Always connect a magnetic contactor between the power supply and the main circuit power supply (L1, L2, and L3) of the servo amplifier, in order to configure a circuit that shuts down the power supply on the side of the servo amplifier's power supply. If a magnetic contactor is not connected, continuous flow of a large current may cause smoke or a fire when the servo amplifier malfunctions.
- Always connect a molded-case circuit breaker, or a fuse to each servo amplifier between the power supply and the main circuit power supply (L1, L2, and L3) of the servo amplifier, in order to configure a circuit that shuts down the power supply on the side of the servo amplifier's power supply. If a molded-case circuit breaker or fuse is not connected, continuous flow of a large current may cause smoke or a fire when the servo amplifier malfunctions.
- When using the regenerative resistor, switch power off with the alarm signal. Otherwise, a regenerative transistor malfunction or the like may overheat the regenerative resistor, causing smoke or a fire.
- Provide adequate protection to prevent screws and other conductive matter, oil and other combustible matter from entering the servo amplifier and servo motor.

3. To prevent injury, note the following

⚠ CAUTION

- Only the power/signal specified in the Instruction Manual should be applied to each terminal. Otherwise, it may cause an electric shock, fire, injury, etc.
- Connect cables to the correct terminals. Otherwise, a burst, damage, etc., may occur.

⚠ CAUTION

- Ensure that polarity (+/-) is correct. Otherwise, a burst, damage, etc., may occur.
- The servo amplifier heat sink, regenerative resistor, servo motor, etc., may be hot while the power is on and for some time after power-off. Take safety measures such as providing covers to avoid accidentally touching them by hands and parts such as cables.

4. Additional instructions

The following instructions should also be fully noted. Incorrect handling may cause a malfunction, injury, electric shock, fire, etc.

(1) Transportation and installation

⚠ CAUTION

- Transport the products correctly according to their mass.
- Stacking in excess of the specified number of product packages is not allowed.
- Do not hold the front cover, cables, or connectors when carrying the servo amplifier. Otherwise, it may drop.
- Install the servo amplifier and the servo motor in a load-bearing place in accordance with the Instruction Manual.
- Do not get on or put heavy load on the equipment. Otherwise, it may cause injury.
- The equipment must be installed in the specified direction.
- Maintain specified clearances between the servo amplifier and the inner surfaces of a control cabinet or other equipment.
- Do not install or operate the servo amplifier and servo motor which have been damaged or have any parts missing.
- Do not block the intake and exhaust areas of the servo amplifier. Otherwise, it may cause a malfunction.
- Do not drop or apply heavy impact on the servo amplifiers and the servo motors. Otherwise, it may cause injury, malfunction, etc.
- Do not strike the connector. Otherwise, it may cause a connection failure, malfunction, etc.
- When you keep or use the equipment, please fulfill the following environment.

Item		Environment
Ambient temperature	Operation	0 °C to 55 °C (non-freezing)
	Storage	-20 °C to 65 °C (non-freezing)
Ambient humidity	Operation	5 %RH to 90 %RH (non-condensing)
	Storage	
Ambience		Indoors (no direct sunlight), free from corrosive gas, flammable gas, oil mist, dust, and dirt
Altitude		2000 m or less above sea level (Contact your local sales office for the altitude for options.)
Vibration resistance		5.9 m/s^2, at 10 Hz to 55 Hz (X, Y, Z axes)

- When the product has been stored for an extended period of time, contact your local sales office.
- When handling the servo motor, be careful with the sharp edges of the servo motor.
- The servo amplifier must be installed in a metal cabinet.

⚠ CAUTION

- When fumigants that contain halogen materials, such as fluorine, chlorine, bromine, and iodine, are used for disinfecting and protecting wooden packaging from insects, they cause a malfunction when entering our products. Please take necessary precautions to ensure that remaining materials from fumigant do not enter our products, or treat packaging with methods other than fumigation, such as heat treatment. Additionally, disinfect and protect wood from insects before packing the products.
- To prevent a fire or injury in case of an earthquake or other natural disasters, securely install, mount, and wire the servo motor in accordance with the Instruction Manual.

(2) Wiring

⚠ CAUTION

- Wire the equipment correctly and securely. Otherwise, the servo motor may operate unexpectedly.
- Make sure to connect the cables and connectors by using the fixing screws and the locking mechanism. Otherwise, the cables and connectors may be disconnected during operation.
- Do not install a power capacitor, surge killer, or radio noise filter (optional FR-BIF(-H)) on the servo amplifier output side.
- To avoid a malfunction, connect the wires to the correct phase terminals (U/V/W) of the servo amplifier and servo motor.
- Connect the servo amplifier power output (U/V/W) to the servo motor power input (U/V/W) directly. Do not connect a magnetic contactor and others between them. Otherwise, it may cause a malfunction.

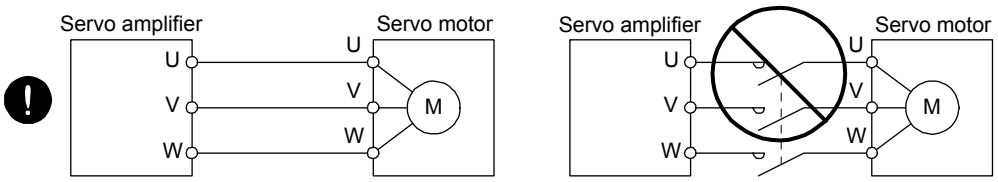

- The connection diagrams in this Instruction Manual are shown for sink interfaces, unless stated otherwise.
- The surge absorbing diode installed to the DC relay for control output should be fitted in the specified direction. Otherwise, the converter unit and the drive unit will malfunction and will not output signals, disabling the emergency stop and other protective circuits.

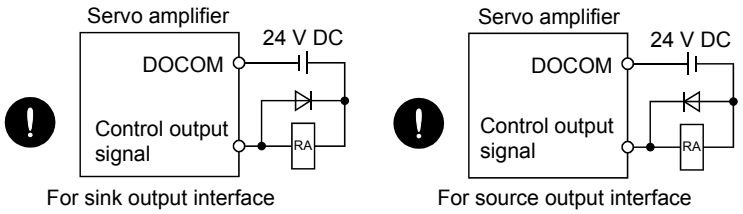

- When the wires are not tightened enough to the terminal block, the wires or terminal block may generate heat because of the poor contact. Be sure to tighten the wires with specified torque.
- Connecting a servo motor of the wrong axis to U, V, W, or CN2 of the servo amplifier may cause a malfunction.
- Configure a circuit to turn off EM2 or EM1 when the main circuit power supply is turned off to prevent an unexpected restart of the servo amplifier.
- To prevent malfunction, avoid bundling power lines (input/output) and signal cables together or running them in parallel to each other. Separate the power lines from the signal cables.

(3) Test run and adjustment

⚠ CAUTION

- When executing a test run, follow the notice and procedures in this instruction manual. Otherwise, it may cause a malfunction, damage to the machine, or injury.
- Before operation, check and adjust the parameter settings. Improper settings may cause some machines to operate unexpectedly.
- Never make a drastic adjustment or change to the parameter values as doing so will make the operation unstable.
- Do not get close to moving parts during the servo-on status.

(4) Usage

⚠ CAUTION

- Provide an external emergency stop circuit to stop the operation and shut the power off immediately.
- For equipment in which the moving part of the machine may collide against the load side, install a limit switch or stopper to the end of the moving part. The machine may be damaged due to a collision.
- Do not disassemble, repair, or modify the product. Otherwise, it may cause an electric shock, fire, injury, etc. Disassembled, repaired, and/or modified products are not covered under warranty.
- Before resetting an alarm, make sure that the run signal of the servo amplifier is off in order to prevent a sudden restart. Otherwise, it may cause an accident.
- Use a noise filter, etc., to minimize the influence of electromagnetic interference. Electromagnetic interference may affect the electronic equipment used near the servo amplifier.
- Do not burn or destroy the servo amplifier. Doing so may generate a toxic gas.
- Use the servo amplifier with the specified servo motor.
- Wire options and peripheral equipment, etc. correctly in the specified combination. Otherwise, it may cause an electric shock, fire, injury, etc.
- The electromagnetic brake on the servo motor is designed to hold the motor shaft and should not be used for ordinary braking.
- For such reasons as incorrect wiring, service life, and mechanical structure (e.g. where a ball screw and the servo motor are coupled via a timing belt), the electromagnetic brake may not hold the motor shaft. To ensure safety, install a stopper on the machine side.
- If the dynamic brake is activated at power-off, alarm occurrence, etc., do not rotate the servo motor by an external force. Otherwise, it may cause a fire.

(5) Corrective actions

⚠ CAUTION

- Ensure safety by confirming the power off, etc. before performing corrective actions. Otherwise, it may cause an accident.
- If it is assumed that a power failure, machine stoppage, or product malfunction may result in a hazardous situation, use a servo motor with an electromagnetic brake or provide an external brake system for holding purpose to prevent such hazard.
- Configure an electromagnetic brake circuit which is interlocked with an external emergency stop switch.

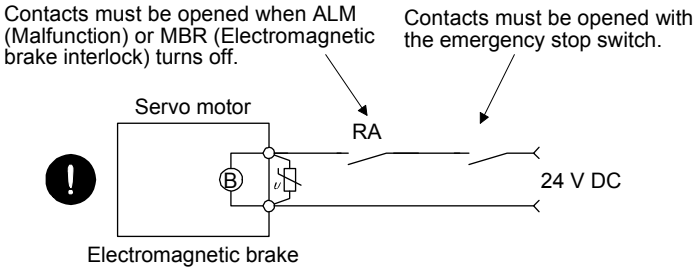

- When an alarm occurs, eliminate its cause, ensure safety, and deactivate the alarm to restart operation.
- If the molded-case circuit breaker or fuse is activated, be sure to remove the cause and secure safety before switching the power on. If necessary, replace the servo amplifier and recheck the wiring. Otherwise, it may cause smoke, fire, or an electric shock.
- Provide an adequate protection to prevent unexpected restart after an instantaneous power failure.
- After an earthquake or other natural disasters, ensure safety by checking the conditions of the installation, mounting, wiring, and equipment before switching the power on to prevent an electric shock, injury, or fire.

(6) Maintenance, inspection and parts replacement

⚠ CAUTION

- Make sure that the emergency stop circuit operates properly such that an operation can be stopped immediately and a power is shut off by the emergency stop switch.
- It is recommended that the servo amplifier be replaced every 10 years when it is used in general environment.
- When using the servo amplifier that has not been energized for an extended period of time, contact your local sales office.

(7) General instruction

- To illustrate details, the equipment in the diagrams of this Instruction Manual may have been drawn without covers and safety guards. When the equipment is operated, the covers and safety guards must be installed as specified. Operation must be performed in accordance with this Instruction Manual.

● DISPOSAL OF WASTE ●

Please dispose a servo amplifier, battery (primary battery) and other options according to your local laws and regulations.

⚠ EEP-ROM life

The number of write times to the EEP-ROM, which stores parameter settings, etc., is limited to 100,000. If the total number of the following operations exceeds 100,000, the servo amplifier may malfunction when the EEP-ROM reaches the end of its useful life.

- Write to the EEP-ROM due to parameter setting changes
- Write to the EEP-ROM due to device changes
- Write to the EEP-ROM due to point table changes

STO function of the servo amplifier

When using the STO function of the servo amplifier, refer to chapter 13.
For the MR-J3-D05 safety logic unit, refer to app. 5.

Compliance with global standards

For the compliance with global standards, refer to app. 4.

«About the manuals»

You must have this Instruction Manual and the following manuals to use this servo. Ensure to prepare them to use the servo safely.

Relevant manuals

Manual name	Manual No.
MELSERVO MR-J4-_TM_ Servo Amplifier Instruction Manual (EtherCAT)	SH(NA)030208ENG
MELSERVO MR-J4-_TM_ Servo Amplifier Instruction Manual (EtherNet/IP)	SH(NA)030226ENG
MELSERVO MR-J4-_TM_ Servo Amplifier Instruction Manual (PROFINET)	SH(NA)030240ENG
MELSERVO-J4 Servo Amplifier Instruction Manual (Troubleshooting)	SH(NA)030109ENG
MELSERVO MR-D30 Instruction Manual (Note 5)	SH(NA)030132ENG
MELSERVO Servo Motor Instruction Manual (Vol. 3) (Note 1)	SH(NA)030113ENG
MELSERVO Linear Servo Motor Instruction Manual (Note 2)	SH(NA)030110ENG
MELSERVO Direct Drive Motor Instruction Manual (Note 3)	SH(NA)030112ENG
MELSERVO Linear Encoder Instruction Manual (Note 2, 4)	SH(NA)030111ENG
MELSERVO EMC Installation Guidelines	IB(NA)67310ENG

Note 1. It is necessary for using a rotary servo motor.
2. It is necessary for using a linear servo motor.
3. It is necessary for using a direct drive motor.
4. It is necessary for using a fully closed loop system.
5. It is necessary for using an MR-D30 functional safety unit.

«Wiring»

Wires mentioned in this Instruction Manual are selected based on the ambient temperature of 40 °C.

«U.S. customary units»

U.S. customary units are not shown in this manual. Convert the values if necessary according to the following table.

Quantity	SI (metric) unit	U.S. customary unit
Mass	1 [kg]	2.2046 [lb]
Length	1 [mm]	0.03937 [inch]
Torque	1 [N•m]	141.6 [oz•inch]
Moment of inertia	1 [(× 10^{-4} kg•m^2)]	5.4675 [oz•$inch^2$]
Load (thrust load/axial load)	1 [N]	0.2248 [lbf]
Temperature	N [°C] × 9/5 + 32	N [°F]

CONTENTS

1. FUNCTIONS AND CONFIGURATION 1- 1 to 1-56

1.1 Summary 1- 1
1.2 Function block diagram 1- 3
1.3 Servo amplifier standard specifications 1-13
1.4 Combinations of servo amplifiers and servo motors 1-19
1.5 Function list 1-21
1.6 Model designation 1-24
1.7 Structure 1-25
1.7.1 Parts identification 1-25
1.7.2 Removal and reinstallation of the front cover 1-38
1.7.3 Installation and removal of network module 1-40
1.8 Configuration including peripheral equipment 1-43

2. INSTALLATION 2- 1 to 2- 6

2.1 Installation direction and clearances 2- 2
2.2 Keeping out of foreign materials 2- 4
2.3 Encoder cable stress 2- 4
2.4 Inspection items 2- 4
2.5 Parts having service life 2- 5
2.6 Restrictions when using this product at altitude exceeding 1000 m and up to 2000 m above sea level 2- 6

3. SIGNALS AND WIRING 3- 1 to 3-44

3.1 Connection example of power circuit 3- 3
3.1.1 200 V class 3- 4
3.1.2 400 V class 3-10
3.1.3 100 V class 3-14
3.2 I/O signal connection example 3-15
3.2.1 For sink I/O interface 3-15
3.2.2 For source I/O interface 3-16
3.3 Explanation of power supply system 3-17
3.3.1 Signal explanations 3-17
3.3.2 Power-on sequence 3-18
3.3.3 Wiring CNP1, CNP2, and CNP3 3-19
3.4 Connectors and pin assignment 3-23
3.5 Signal (device) explanations 3-24
3.5.1 Input device 3-24
3.5.2 Output device 3-26
3.5.3 Output signal 3-28
3.5.4 Power supply 3-28
3.6 Forced stop deceleration function 3-29
3.6.1 Forced stop deceleration function 3-29
3.6.2 Base circuit shut-off delay time function 3-30
3.6.3 Vertical axis freefall prevention function 3-31
3.6.4 Residual risks of the forced stop function (EM2) 3-31
3.7 Alarm occurrence timing chart 3-32

3.7.1 When you use the forced stop deceleration function 3-32
3.7.2 When you do not use the forced stop deceleration function 3-33
3.8 Interfaces 3-34
3.8.1 Internal connection diagram 3-34
3.8.2 Detailed explanation of interfaces 3-35
3.8.3 Source I/O interfaces 3-37
3.9 Servo motor with an electromagnetic brake 3-38
3.9.1 Safety precautions 3-38
3.9.2 Timing chart 3-39
3.10 Grounding 3-43

4. STARTUP 4- 1 to 4-20

4.1 Switching power on for the first time 4- 2
4.1.1 Startup procedure 4- 2
4.1.2 Wiring check 4- 3
4.1.3 Surrounding environment 4- 6
4.2 Startup 4- 6
4.3 Switch setting and display of the servo amplifier 4- 8
4.3.1 Switches 4- 8
4.3.2 Scrolling display 4- 9
4.3.3 Status display of an axis 4-11
4.4 Test operation 4-13
4.5 Test operation mode 4-13
4.5.1 Test operation mode in MR Configurator2 4-14
4.5.2 Motor-less operation in controller 4-18

5. PARAMETERS 5- 1 to 5-108

5.1 Parameter list 5- 1
5.1.1 Basic setting parameters ([Pr. PA_ _]) 5- 2
5.1.2 Gain/filter setting parameters ([Pr. PB_ _]) 5- 3
5.1.3 Extension setting parameters ([Pr. PC_ _]) 5- 5
5.1.4 I/O setting parameters ([Pr. PD_ _]) 5- 7
5.1.5 Extension setting 2 parameters ([Pr. PE_ _]) 5- 8
5.1.6 Extension setting 3 parameters ([Pr. PF_ _]) 5-10
5.1.7 Linear servo motor/DD motor setting parameters ([Pr. PL_ _]) 5-12
5.1.8 Positioning control parameters ([Pr. PT_ _]) 5-13
5.1.9 Network setting parameters ([Pr. PN_ _]) 5-16
5.2 Detailed list of parameters 5-17
5.2.1 Basic setting parameters ([Pr. PA_ _]) 5-18
5.2.2 Gain/filter setting parameters ([Pr. PB_ _]) 5-33
5.2.3 Extension setting parameters ([Pr. PC_ _]) 5-46
5.2.4 I/O setting parameters ([Pr. PD_ _]) 5-67
5.2.5 Extension setting 2 parameters ([Pr. PE_ _]) 5-71
5.2.6 Extension setting 3 parameters ([Pr. PF_ _]) 5-75
5.2.7 Linear servo motor/DD motor setting parameters ([Pr. PL_ _]) 5-77
5.2.8 Positioning control parameters ([Pr. PT_ _]) 5-80
5.2.9 Network setting parameters ([Pr. PN_ _]) 5-104
5.3 Software limit 5-105
5.4 How to set the electronic gear 5-106

5.4.1 Electronic gear setting in the cyclic synchronous mode, profile mode and point table method 5-106
5.4.2 Electronic gear setting in the indexer method 5-108

6. NORMAL GAIN ADJUSTMENT 6- 1 to 6-18

6.1 Different adjustment methods 6- 1
6.1.1 Adjustment on a single servo amplifier 6- 1
6.1.2 Adjustment using MR Configurator2 ..... 6- 2
6.2 One-touch tuning 6- 3
6.2.1 One-touch tuning flowchart 6- 4
6.2.2 Display transition and operation procedure of one-touch tuning 6- 5
6.2.3 Caution for one-touch tuning 6- 8
6.3 Auto tuning 6- 9
6.3.1 Auto tuning mode 6- 9
6.3.2 Auto tuning mode basis 6-10
6.3.3 Adjustment procedure by auto tuning 6-11
6.3.4 Response level setting in auto tuning mode 6-12
6.4 Manual mode 6-13
6.5 2 gain adjustment mode 6-16

7. SPECIAL ADJUSTMENT FUNCTIONS 7- 1 to 7-38

7.1 Filter setting 7- 1
7.1.1 Machine resonance suppression filter 7- 2
7.1.2 Adaptive filter II 7- 5
7.1.3 Shaft resonance suppression filter 7- 7
7.1.4 Low-pass filter 7- 8
7.1.5 Advanced vibration suppression control II 7- 8
7.1.6 Command notch filter 7-13
7.2 Gain switching function 7-15
7.2.1 Applications 7-15
7.2.2 Function block diagram 7-16
7.2.3 Parameter 7-17
7.2.4 Gain switching procedure 7-20
7.3 Tough drive function 7-24
7.3.1 Vibration tough drive function 7-24
7.3.2 Instantaneous power failure tough drive function 7-26
7.4 Compliance with SEMI-F47 standard 7-30
7.5 Model adaptive control disabled 7-33
7.6 Lost motion compensation function 7-34
7.7 Super trace control 7-37

8. TROUBLESHOOTING 8- 1 to 8-22

8.1 Explanations of the lists 8- 1
8.2 Alarm list 8- 2
8.3 Warning list 8-11
8.4 Remedies 8-13
8.4.1 Remedies for alarms 8-13
8.4.2 Remedies for warnings 8-16

8.5 Troubleshooting at power on 8-20
8.6 Trouble which does not trigger an alarm/warning 8-21

9. DIMENSIONS 9- 1 to 9-18

9.1 Servo amplifier 9- 1
9.2 Connector 9-17

10. CHARACTERISTICS 10- 1 to 10-16

10.1 Overload protection characteristics 10- 1
10.2 Power supply capacity and generated loss 10- 5
10.3 Dynamic brake characteristics 10- 8
10.3.1 Dynamic brake operation 10- 9
10.3.2 Permissible load to motor inertia when the dynamic brake is used 10-12
10.4 Cable bending life 10-13
10.5 Inrush currents at power-on of main circuit and control circuit 10-14

11. OPTIONS AND PERIPHERAL EQUIPMENT 11- 1 to 11-106

11.1 Cable/connector sets 11- 1
11.1.1 Combinations of cable/connector sets 11- 2
11.1.2 MR-D05UDL3M-B STO cable 11- 4
11.1.3 Battery cable/junction battery cable 11- 5
11.2 Regenerative options 11- 6
11.2.1 Combination and regenerative power 11- 6
11.2.2 Selection of regenerative option 11- 8
11.2.3 Parameter setting 11-11
11.2.4 Connection of regenerative option 11-11
11.2.5 Dimensions 11-16
11.3 FR-BU2-(H) brake unit 11-20
11.3.1 Selection 11-20
11.3.2 Brake unit parameter setting 11-21
11.3.3 Connection example 11-22
11.3.4 Dimensions 11-30
11.4 FR-RC-(H) power regeneration converter 11-33
11.5 FR-CV-(H) power regeneration common converter 11-37
11.5.1 Model designation 11-38
11.5.2 Selection 11-38
11.6 Junction terminal block PS7DW-20V14B-F (recommended) 11-46
11.7 MR Configurator2 11-47
11.7.1 Specifications 11-47
11.7.2 System configuration 11-48
11.7.3 Precautions for using USB communication function 11-49
11.8 Battery 11-50
11.8.1 Selection of battery 11-50
11.8.2 MR-BAT6V1SET-A battery 11-50
11.8.3 MR-BAT6V1BJ battery for junction battery cable 11-55
11.8.4 MR-BT6VCASE battery case 11-59
11.8.5 MR-BAT6V1 battery 11-65
11.9 Selection example of wires 11-66

11.10 Molded-case circuit breakers, fuses, magnetic contactors 11-69
11.11 Power factor improving DC reactors 11-72
11.12 Power factor improving AC reactors 11-74
11.13 Relay (recommended) 11-77
11.14 Noise reduction techniques 11-78
11.15 Earth-leakage current breaker 11-86
11.16 EMC filter (recommended) 11-89
11.17 External dynamic brake 11-96
11.18 Panel through attachment (MR-J4ACN15K/MR-J3ACN) 11-102

12. ABSOLUTE POSITION DETECTION SYSTEM 12- 1 to 12- 6

12.1 Summary 12- 1
12.1.1 Features 12- 1
12.1.2 Structure 12- 2
12.1.3 Parameter setting 12- 2
12.1.4 Confirmation of absolute position detection data 12- 2
12.2 Battery 12- 3
12.2.1 Using MR-BAT6V1SET-A battery 12- 3
12.2.2 Using MR-BAT6V1BJ battery for junction battery cable 12- 4
12.2.3 Using MR-BT6VCASE battery case 12- 5

13. USING STO FUNCTION 13- 1 to 13-12

13.1 Introduction 13- 1
13.1.1 Summary 13- 1
13.1.2 Terms related to safety 13- 1
13.1.3 Cautions 13- 1
13.1.4 Residual risks of the STO function 13- 2
13.1.5 Specifications 13- 3
13.1.6 Maintenance 13- 4
13.2 STO I/O signal connector (CN8) and signal layouts 13- 4
13.2.1 Signal layouts 13- 4
13.2.2 Signal (device) explanations 13- 5
13.2.3 How to pull out the STO cable 13- 5
13.3 Connection example 13- 6
13.3.1 Connection example for CN8 connector 13- 6
13.3.2 External I/O signal connection example using an MR-J3-D05 safety logic unit 13- 7
13.3.3 External I/O signal connection example using an external safety relay unit 13- 9
13.4 Detailed description of interfaces 13-10
13.4.1 Sink I/O interface 13-10
13.4.2 Source I/O interface 13-12

14. USING A LINEAR SERVO MOTOR 14- 1 to 14-32

14.1 Functions and configuration 14- 1
14.1.1 Summary 14- 1
14.1.2 Servo system with auxiliary equipment 14- 2
14.2 Signals and wiring 14- 5
14.3 Operation and functions 14- 7
14.3.1 Startup 14- 7

14.3.2 Magnetic pole detection 14-10
14.3.3 Home position return 14-19
14.3.4 Test operation mode in MR Configurator2 14-23
14.3.5 Operation from controller 14-25
14.3.6 Function 14-26
14.3.7 Absolute position detection system 14-28
14.4 Characteristics 14-29
14.4.1 Overload protection characteristics 14-29
14.4.2 Power supply capacity and generated loss 14-30
14.4.3 Dynamic brake characteristics 14-31
14.4.4 Permissible load to motor mass ratio when the dynamic brake is used 14-32

15. USING A DIRECT DRIVE MOTOR 15- 1 to 15-22

15.1 Functions and configuration 15- 1
15.1.1 Summary 15- 1
15.1.2 Servo system with auxiliary equipment 15- 2
15.2 Signals and wiring 15- 3
15.3 Operation and functions 15- 4
15.3.1 Startup procedure 15- 5
15.3.2 Magnetic pole detection 15- 6
15.3.3 Operation from controller 15-14
15.3.4 Function 15-14
15.4 Characteristics 15-16
15.4.1 Overload protection characteristics 15-16
15.4.2 Power supply capacity and generated loss 15-18
15.4.3 Dynamic brake characteristics 15-19

16. FULLY CLOSED LOOP SYSTEM 16- 1 to 16-20

16.1 Functions and configuration 16- 1
16.1.1 Function block diagram 16- 1
16.1.2 Selecting procedure of control mode 16- 2
16.1.3 System configuration 16- 3
16.2 Load-side encoder 16- 4
16.2.1 Linear encoder 16- 4
16.2.2 Rotary encoder 16- 4
16.2.3 Configuration diagram of encoder cable 16- 4
16.3 Operation and functions 16- 5
16.3.1 Startup 16- 5
16.3.2 Home position return 16-12
16.3.3 Operation from controller 16-15
16.3.4 Fully closed loop control error detection functions 16-15
16.3.5 Auto tuning function 16-16
16.3.6 Machine analyzer function 16-16
16.3.7 Test operation mode 16-16
16.3.8 Absolute position detection system under fully closed loop system 16-17
16.3.9 About MR Configurator2 16-18

17. APPLICATION OF FUNCTIONS 17- 1 to 17-18

17.1 Scale measurement function 17- 1
17.1.1 Functions and configuration 17- 1
17.1.2 Scale measurement encoder 17- 3
17.1.3 How to use the scale measurement function 17- 5
17.2 Using a MR-J4-_TM_ servo amplifier in combination with the MR-D30 functional safety unit 17- 7
17.2.1 Summary 17- 7
17.2.2 Function block diagram 17- 8
17.2.3 System configuration 17- 9
17.2.4 Combinations of servo amplifiers and servo motors 17-10
17.2.5 Connection example with other devices 17-14
17.2.6 If an alarm occurs 17-15
17.2.7 Troubleshooting 17-15

18. HOW TO USE THE POINT TABLE 18- 1 to 18-30

18.1 Specification list 18- 2
18.2 Switching power on for the first time 18- 4
18.3 Point table mode (pt) 18- 6
18.3.1 Point table mode (pt) 18- 6
18.3.2 Automatic operation using point table 18- 6
18.4 Jog mode (jg) 18-24
18.5 Point table setting method 18-26
18.5.1 Point table setting method with MR Configurator2 18-26
18.5.2 Point table setting method with objects 18-29

19. HOW TO USE INDEXER 19- 1 to 19-16

19.1 Specification list 19- 2
19.2 Switching power on for the first time 19- 3
19.3 Indexer mode (idx) 19- 5
19.3.1 Indexer mode (idx) 19- 5
19.3.2 Rotation direction specifying indexer 19- 6
19.3.3 Shortest rotating indexer operation 19-10
19.4 Jog mode (jg) 19-13
19.4.1 Station JOG operation 19-13
19.4.2 JOG operation 19-15

APPENDIX App.- 1 to App.-60

App. 1 When using the servo amplifier with the DC power supply input ..... App.- 1
App. 2 Handling of AC servo amplifier batteries for the United Nations Recommendations on the Transport of Dangerous Goods ..... App.- 5
App. 3 Symbol for the new EU Battery Directive ..... App.- 8
App. 4 Compliance with global standards ..... App.- 9
App. 5 MR-J3-D05 Safety logic unit App.-23
App. 6 EC declaration of conformity App.-41
App. 7 How to replace servo amplifier without magnetic pole detection App.-43
App. 8 Analog monitor App.-44
App. 9 Special specification App.-55

App. 10 Driving on/off of main circuit power supply with DC power supply App.-59

1. FUNCTIONS AND CONFIGURATION

1.1 Summary

⚠CAUTION	●To ensure safety of the system against unauthorized access via a network, take security measures such as using a firewall.

The Mitsubishi Electric MELSERVO-J4 series general-purpose AC servo has further higher performance and higher functions compared to the previous MELSERVO-J3 series.
Multi-network compatible MR-J4-_TM_ servo amplifier can be connected to the network you use by combining with a network module (Anybus CompactCom M40) manufactured by HMS Industrial Networks.
MELSERVO-J4 series compatible rotary servo motor is equipped with 22-bit (4194304 pulses/rev) high-resolution absolute encoder. In addition, speed frequency response is increased to 2.5 kHz. Thus, faster and more accurate control is enabled as compared to MELSERVO-J3 series.
MR-J4-_TM_ servo amplifier operates MELSERVO-J4 series compatible rotary servo motors, linear servo motors, and direct drive motors.
With one-touch tuning and real-time auto tuning, you can automatically adjust the servo gains according to the machine.
The tough drive function and the drive recorder function, which are well-received in the MELSERVO-JN series, have been improved. The MR-J4 servo amplifier supports the improved functions. Additionally, the preventive maintenance support function detects an error in the machine parts. This function provides strong support for the machine maintenance and inspection.
The MR-J4-_TM_ servo amplifier supports the STO (Safe Torque Off) function. By combining with optional MR-J3-D05, the servo amplifier supports SS1 (Safe stop 1) function.
The MR-J4-_TM_ servo amplifier has a USB communication interface. Therefore, you can connect the servo amplifier to the personal computer with MR Configurator2 installed to perform the parameter setting, test operation, gain adjustment, and others.
An A/B/Z-phase differential output method external encoder can be connected through the CN2L connector. In a fully closed loop system, a four-wire type external encoder is connectable as well. The following table indicates the communication method of the external encoder compatible with MR-J4-_TM_ servo amplifiers.

Table 1.1 Connectors to connect external encoders

Operation mode	External encoder communication method	Connector
Linear servo motor system	Two-wire type	CN2 (Note 1)
	Four-wire type	
	A/B/Z-phase differential output method	CN2L (Note 2)
Fully closed loop system	Two-wire type	CN2L
	Four-wire type	
	A/B/Z-phase differential output method	
Scale measurement function (Note 3)	Two-wire type	CN2L
	Four-wire type	
	A/B/Z-phase differential output method	

Note 1. The MR-J4THCBL03M branch cable is necessary.
2. Connect a thermistor to CN2.
3. This is used with servo amplifiers with software version B0 or later.

1. FUNCTIONS AND CONFIGURATION

The following shows compatible networks. Prepare a network module designed for Mitsubishi Electric MELSERVO (Anybus CompactCom M40) manufactured by HMS Industrial Networks according to the Manufacturer Software Version of the MR-J4-_TM_ servo amplifier and the network you use.

Servo amplifier software version	Network	Network module	
		Product name	Model
B2 or later	EtherCAT	ABCC-M40-ECT	6916-C-203
			AB6916-C (Note 1)
			AB6916-B (Note 1, 2)
	EtherNet/IP	ABCC-M40-EIP	AB6927-C
	PROFINET	ABCC-M40-PIR	AB6938-C
B1 or earlier	EtherCAT	ABCC-M40-ECT	AB6916-C
			AB6916-B (Note 2, 3)
	EtherNet/IP	ABCC-M40-EIP	AB6927-C
	PROFINET	ABCC-M40-PIR	AB6938-C

Note 1. Although it is recommended that you use 6916-C-203, AB6916-B and AB6916-C are also available. When using AB6916-B or AB6916-C, Configured Station Alias cannot be used. For details, refer to "MR-J4-_TM_ Servo Amplifier Instruction Manual (EtherCAT)".

2. When using AB6916-B, use EtherCAT Slave Information (ESI). Without ESI, the controller does not recognize the 711th and later objects because up to 710 sets of object information can be read with Get OD List.

3. Although it is recommended that you use AB6916-C, AB6916-B is also available.

1.2 Function block diagram

The function block diagram of this servo is shown below.

(1) 200 V class

(a) MR-J4-500TM or less

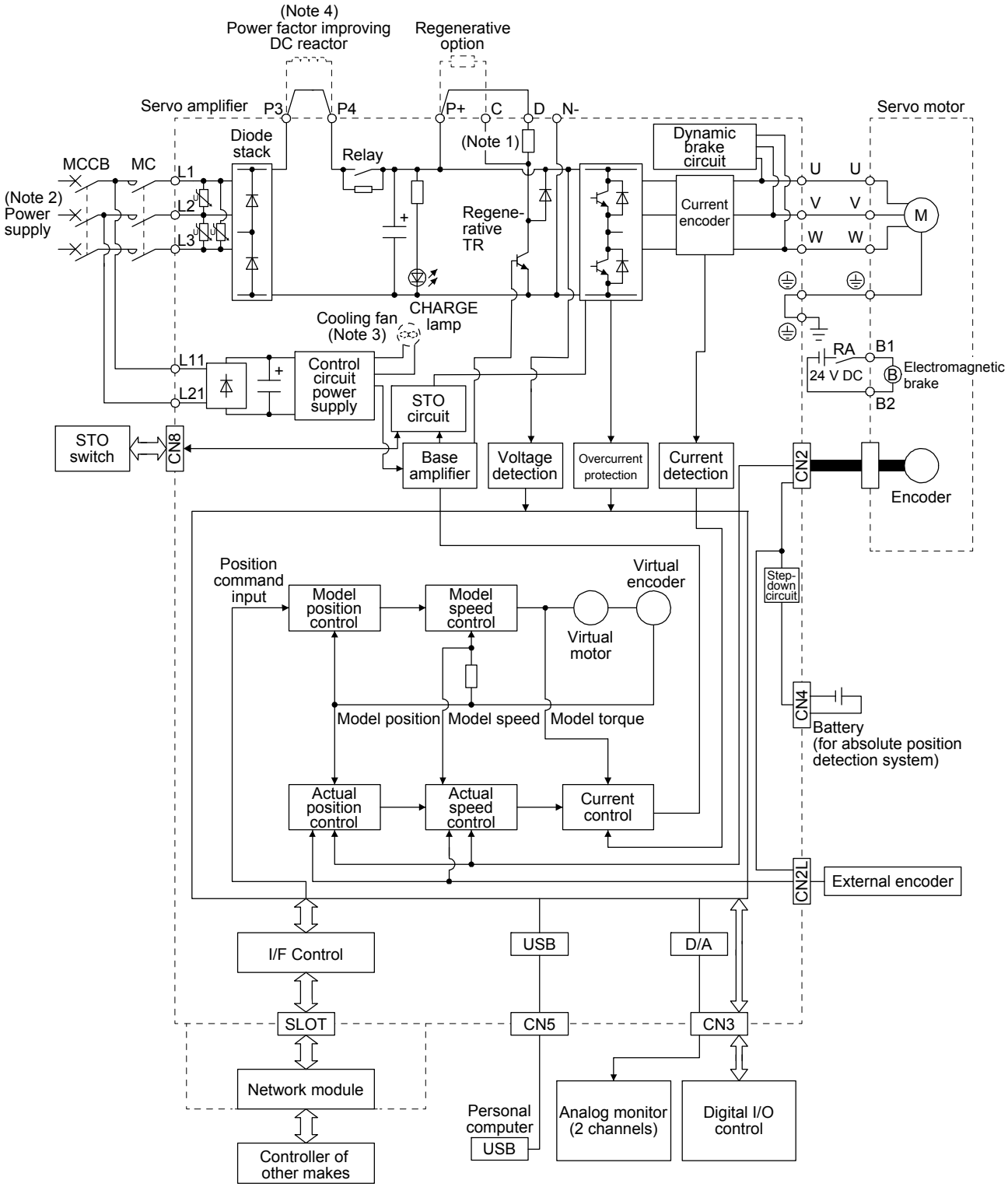

Note 1. The built-in regenerative resistor is not provided for MR-J4-10TM.
2. For 1-phase 200 V AC to 240 V AC, connect the power supply to L1 and L3. Leave L2 open.
Refer to section 1.3 for the power supply specifications.
3. Servo amplifiers MR-J4-70TM or more have a cooling fan.
4. The power factor improving AC reactor can also be used. In this case, the power factor improving DC reactor cannot be used.
When not using the power factor improving DC reactor, short P3 and P4.

(b) MR-J4-700TM

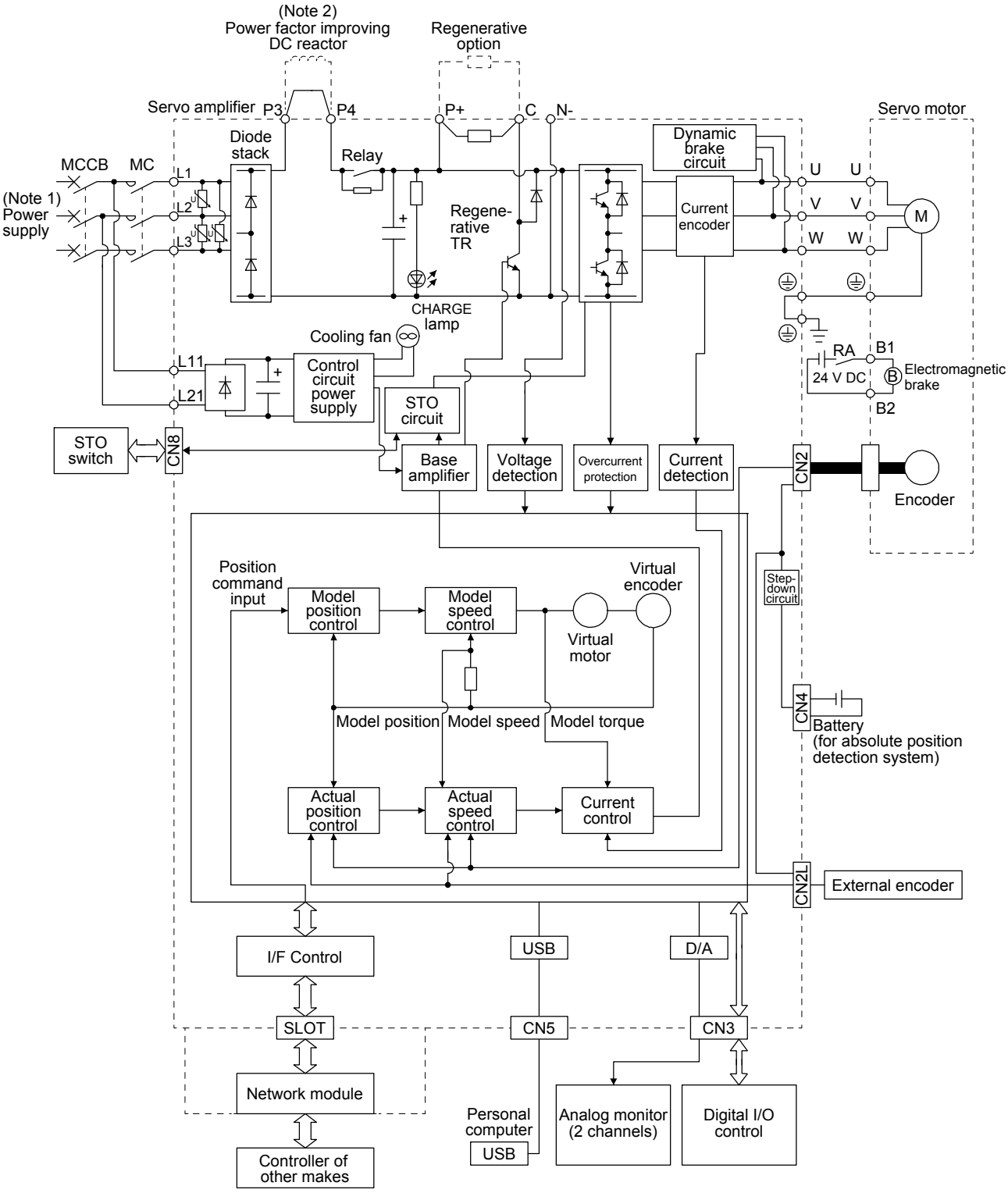

Note 1. Refer to section 1.3 for the power supply specifications.

2. The power factor improving AC reactor can also be used. In this case, the power factor improving DC reactor cannot be used. When not using the power factor improving DC reactor, short P3 and P4.

(c) MR-J4-11KTM/MR-J4-15KTM/MR-J4-22KTM

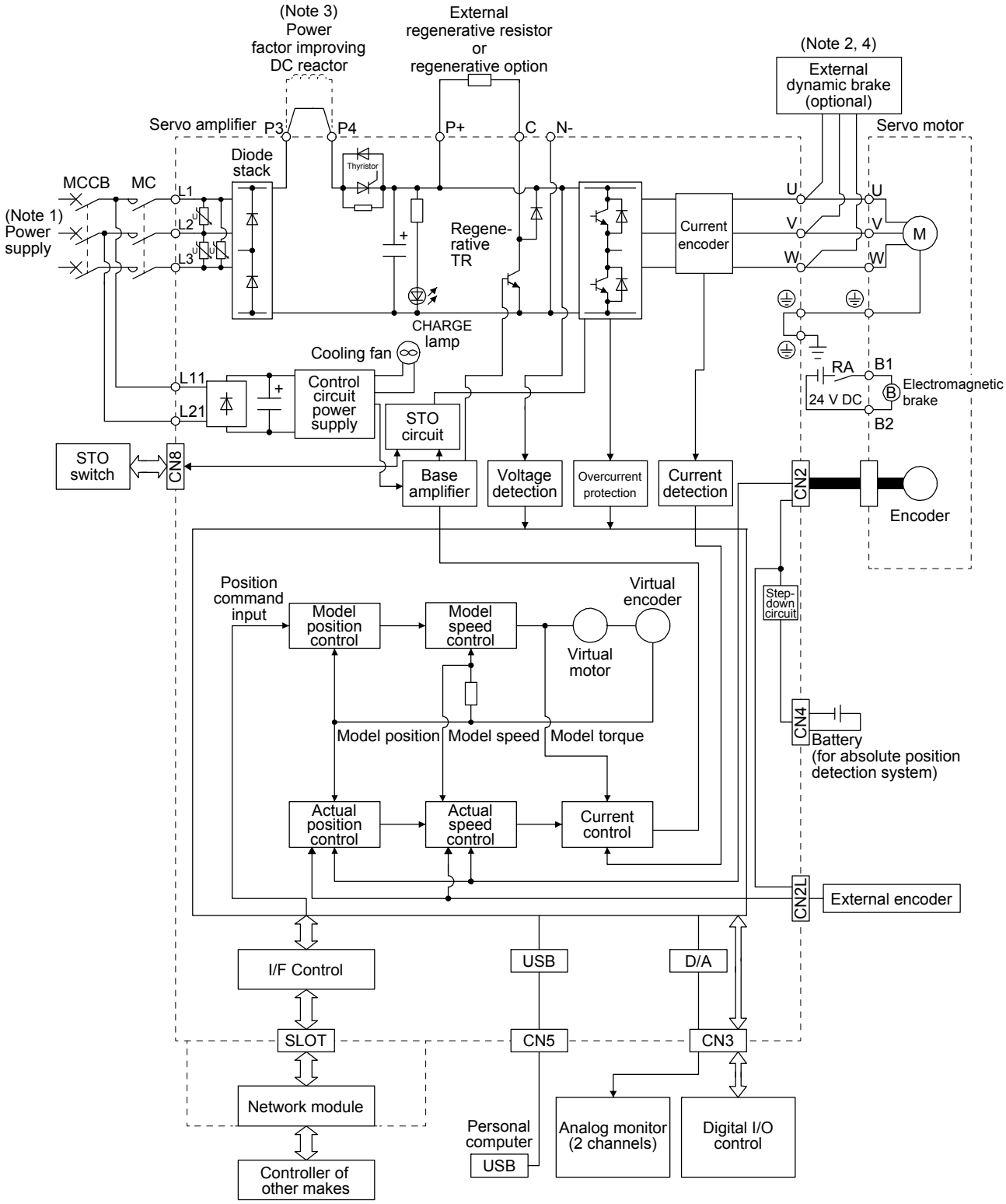

Note 1. Refer to section 1.3 for the power supply specifications.
2. Use an external dynamic brake for this servo amplifier. Failure to do so will cause an accident because the servo motor does not stop immediately but coasts at an alarm occurrence for which the servo motor does not decelerate to stop. Ensure the safety in the entire equipment. For alarms for which the servo motor does not decelerate to stop, refer to chapter 8.
3. The power factor improving AC reactor can also be used. In this case, the power factor improving DC reactor cannot be used. When not using the power factor improving DC reactor, short P3 and P4.
4. The external dynamic brake cannot be used for compliance with SEMI-F47 standard. Do not assign DB (Dynamic brake interlock) in [Pr. PD07] to [Pr. PD09]. Failure to do so will cause the servo amplifier to become servo-off when an instantaneous power failure occurs.

(2) 400 V class

(a) MR-J4-350TM4 or less

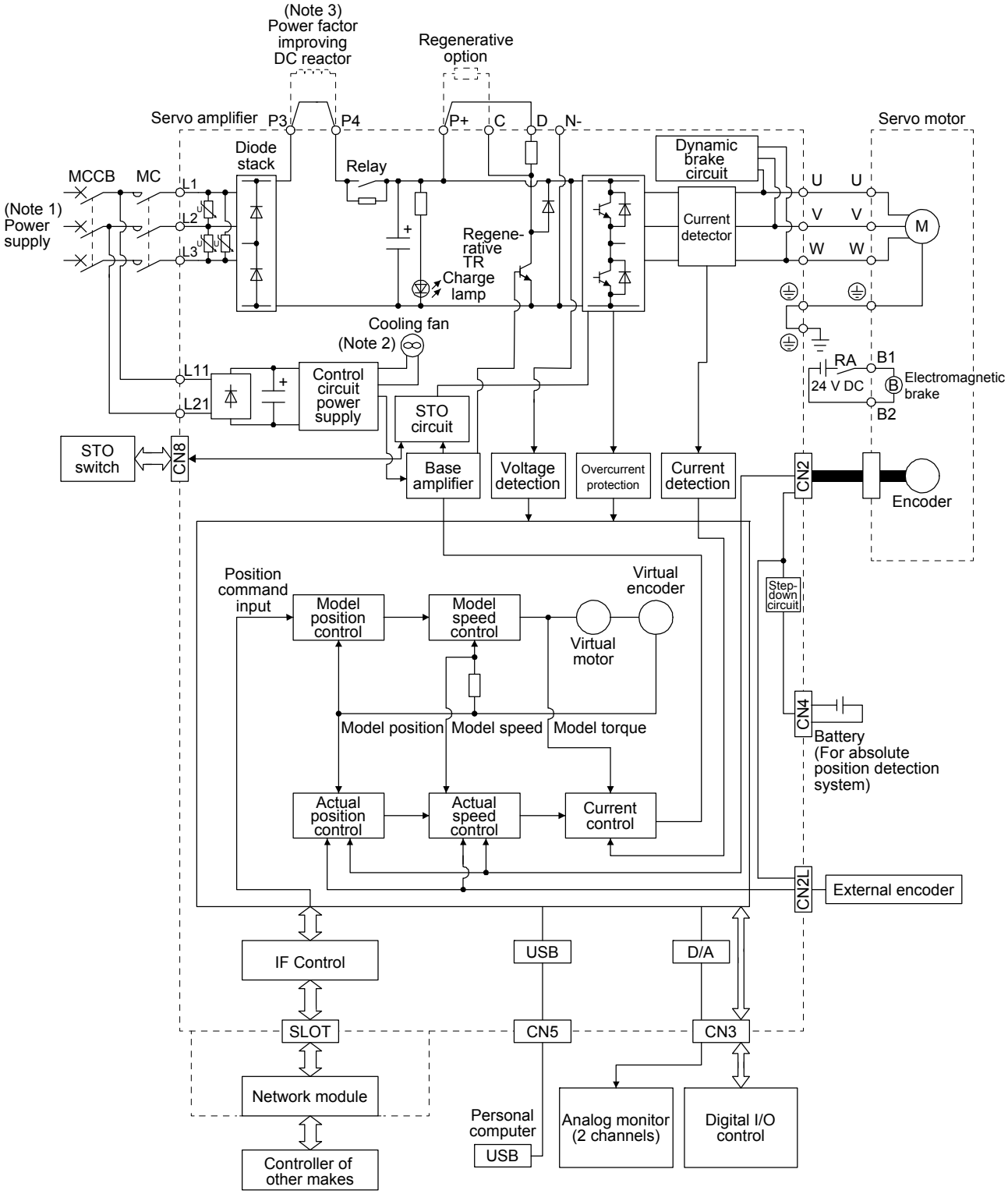

Note 1. Refer to section 1.3 for the power supply specification.

2. Servo amplifiers MR-J4-200TM4 or more have a cooling fan.

3. The power factor improving AC reactor can also be used. In this case, the power factor improving DC reactor cannot be used. When not using the power factor improving DC reactor, short P3 and P4.

(b) MR-J4-500TM4/MR-J4-700TM4

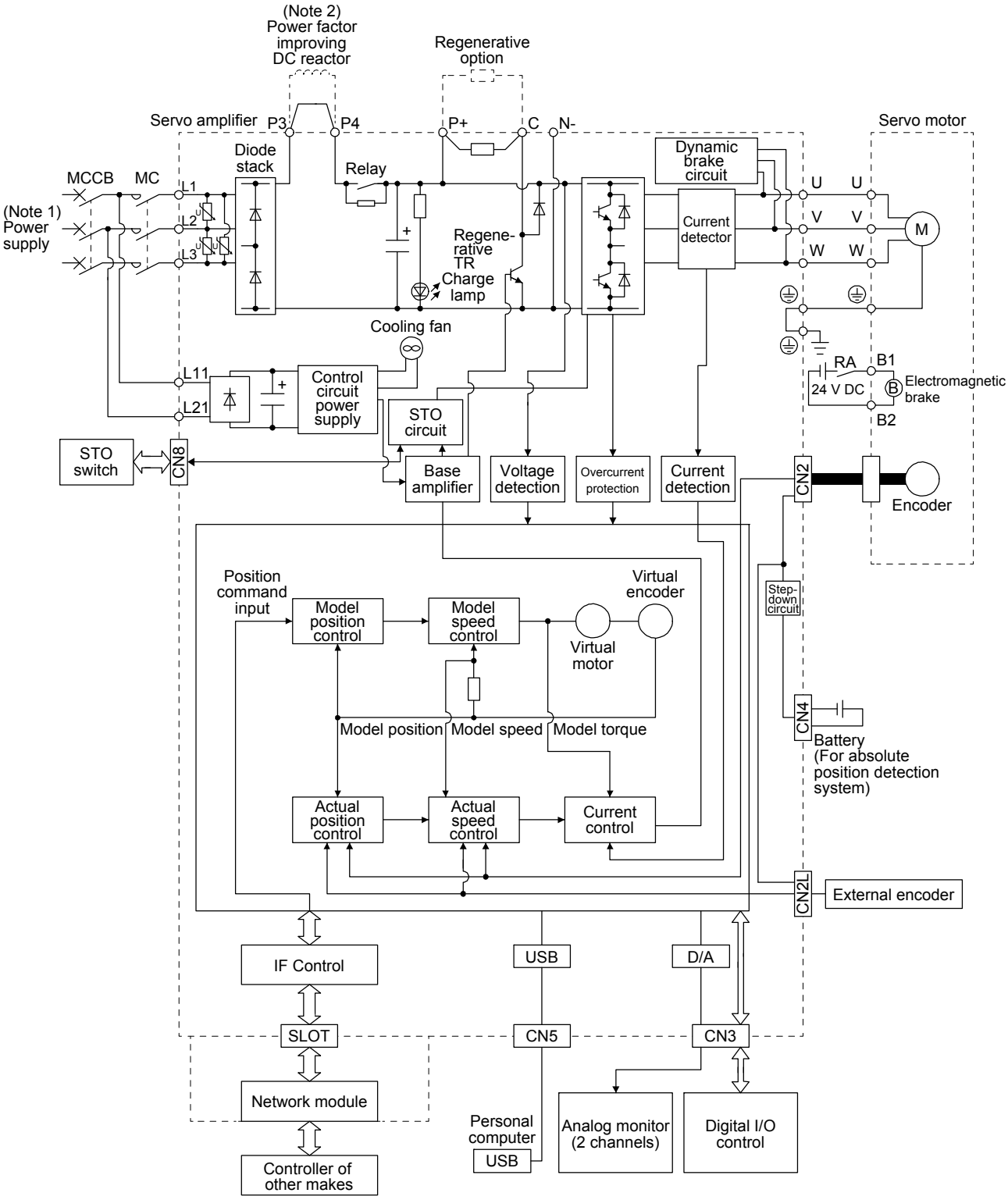

Note 1. Refer to section 1.3 for the power supply specification.

2. The power factor improving AC reactor can also be used. In this case, the power factor improving DC reactor cannot be used. When not using the power factor improving DC reactor, short P3 and P4.

(c) MR-J4-11KTM4/MR-J4-15KTM4/MR-J4-22KTM4

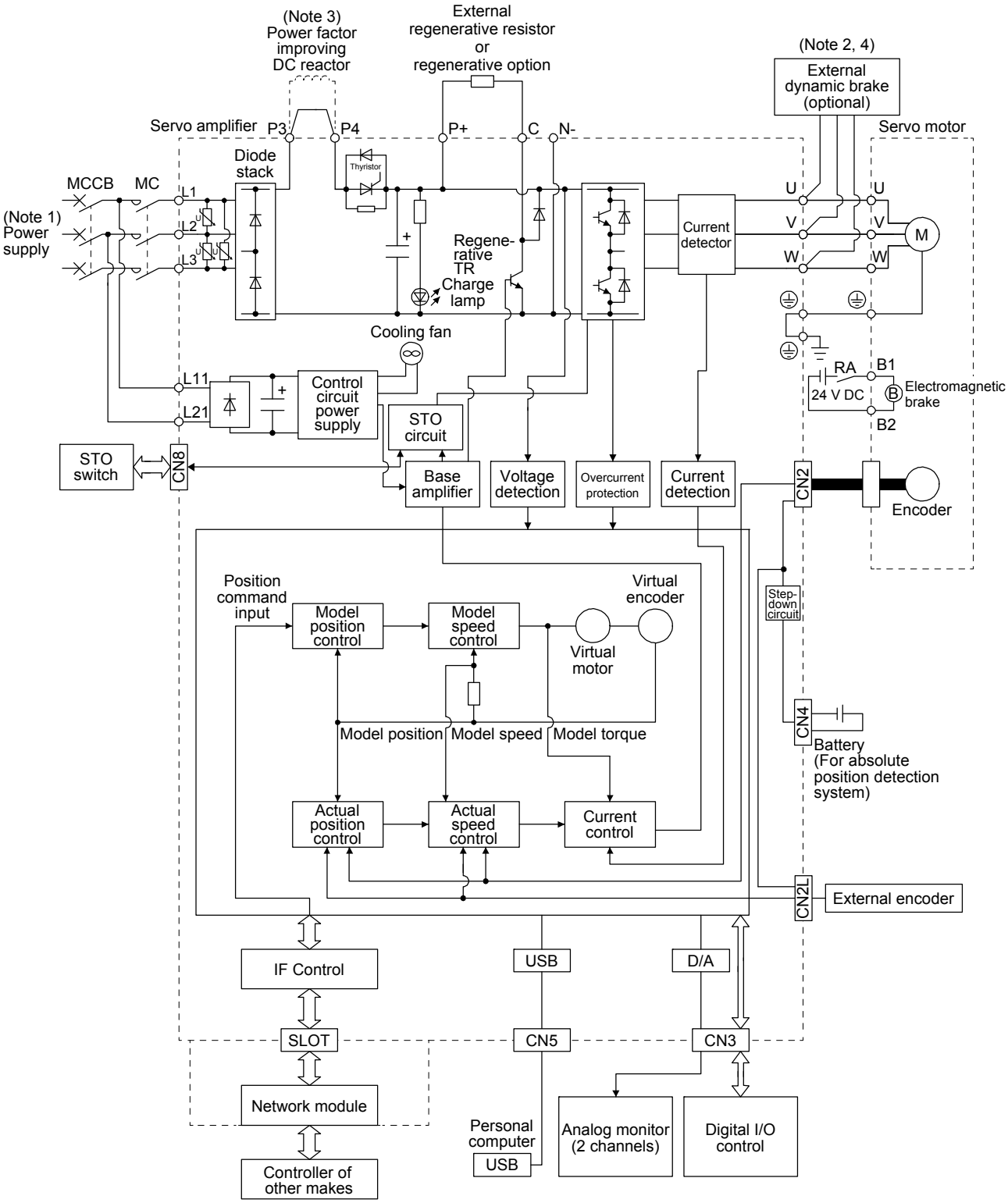

Note 1. Refer to section 1.3 for the power supply specifications.
2. Use an external dynamic brake for this servo amplifier. Failure to do so will cause an accident because the servo motor does not stop immediately but coasts at an alarm occurrence for which the servo motor does not decelerate to stop. Ensure the safety in the entire equipment. For alarms for which the servo motor does not decelerate to stop, refer to chapter 8.
3. The power factor improving AC reactor can also be used. In this case, the power factor improving DC reactor cannot be used. When not using the power factor improving DC reactor, short P3 and P4.
4. The external dynamic brake cannot be used for compliance with SEMI-F47 standard. Do not assign DB (Dynamic brake interlock) in [Pr. PD07] to [Pr. PD09]. Failure to do so will cause the servo amplifier to become servo-off when an instantaneous power failure occurs.

(3) 100 V class

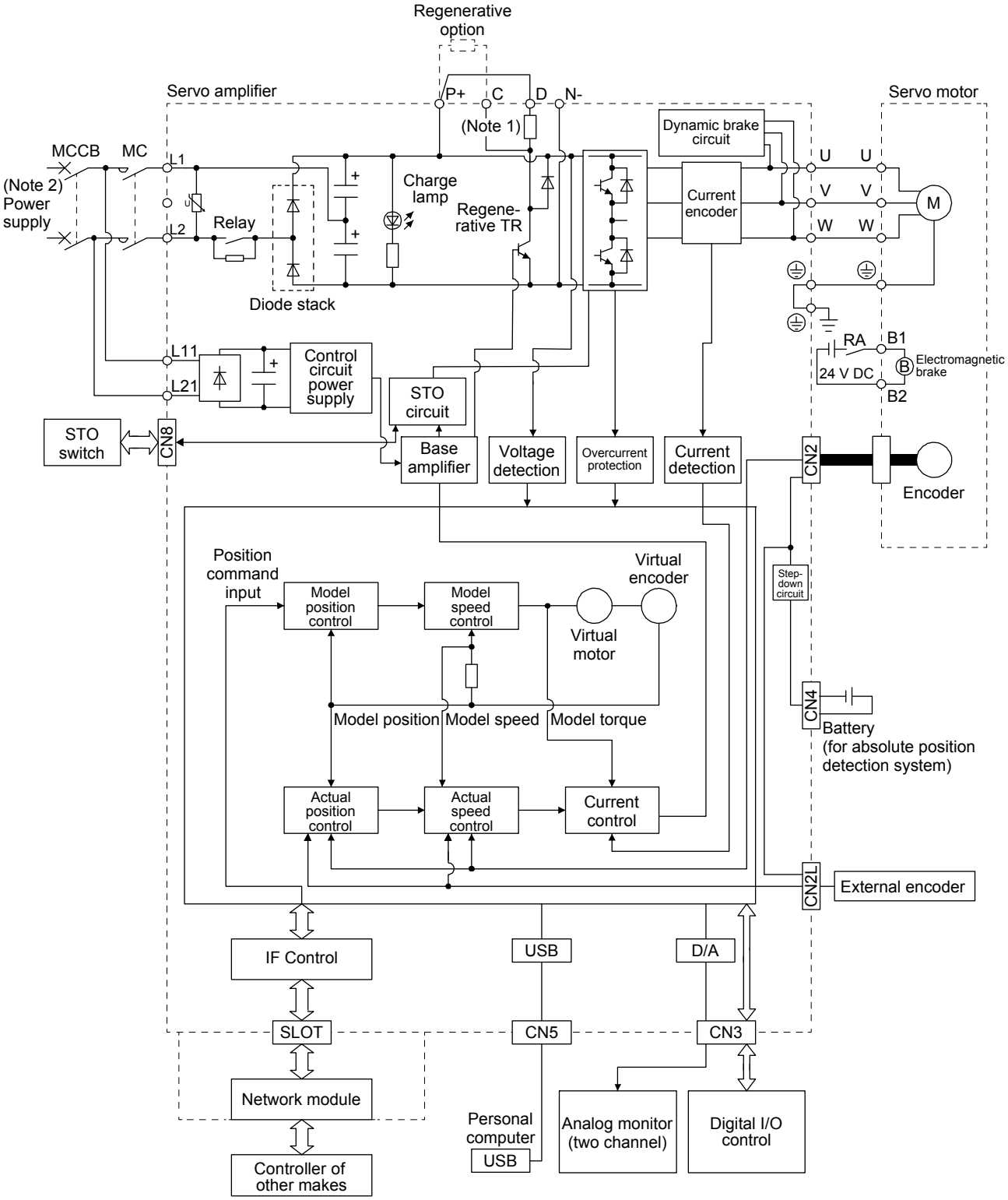

Note 1. The built-in regenerative resistor is not provided for MR-J4-10TM1.
2. Refer to section 1.3 for the power supply specifications.

1.3 Servo amplifier standard specifications

(1) 200 V class

Model: MR-J4-_			10TM	20TM	40TM	60TM	70TM	100TM	200TM	350TM	500TM	700TM	11KTM	15KTM	22KTM
Output	Rated voltage		3-phase 170 V AC												
	Rated current	[A]	1.1	1.5	2.8	3.2	5.8	6.0	11.0	17.0	28.0	37.0	68.0	87.0	126.0
	Output frequency		Less than 590 Hz												
	Output frequency accuracy		±0.01%												
Main circuit power supply input	Voltage/ Frequency	At AC input	3-phase or 1-phase 200 V AC to 240 V AC, 50 Hz/60 Hz					3-phase or 1-phase 200 V AC to 240 V AC, 50 Hz/60 Hz (Note 7)		3-phase 200 V AC to 240 V AC, 50 Hz/60 Hz					
		At DC input (Note 8)	283 V DC to 340 V DC												
	Rated current (Note 5)	[A]	0.9	1.5	2.6	3.2 (Note 6)	3.8	5.0	10.5	16.0	21.7	28.9	46.0	64.0	95.0
	Permissible voltage fluctuation	At AC input	3-phase or 1-phase 170 V AC to 264 V AC					3-phase or 1-phase 170 V AC to 264 V AC (Note 7)		3-phase 170 V AC to 264 V AC					
		At DC input (Note 8)	241 V DC to 374 V DC												
	Permissible frequency fluctuation		Within ±5%												
	Power supply capacity	[kVA]	Refer to section 10.2.												
	Inrush current	[A]	Refer to section 10.5.												
Control circuit power supply input	Voltage/ Frequency	At AC input	1-phase 200 V AC to 240 V AC, 50 Hz/60 Hz												
		At DC input (Note 8)	283 V DC to 340 V DC												
	Rated current	[A]	0.2								0.3				
	Permissible voltage fluctuation	At AC input	1-phase 170 V AC to 264 V AC												
		At DC input (Note 8)	241 V DC to 374 V DC												
	Permissible frequency fluctuation		Within ±5%												
	Power consumption	[W]	30								45				
	Inrush current	[A]	Refer to section 10.5.												
Interface power supply	Voltage		24 V DC ± 10%												
	Current capacity	[A]	0.3 (including CN8 connector signals) (Note 1)												
Control method			Sine-wave PWM control, current control method												
Dynamic brake			Built-in										External (Note 11, 12)		
Fully closed loop control			Compatible												
Load-side encoder interface			Mitsubishi Electric high-speed serial communication, A/B/Z-phase differential input signal												
Communication function			USB: connection to a personal computer or others (MR Configurator2-compatible)												
Encoder output pulses			Compatible (A/B/Z-phase pulse)												
Analog monitor			Two channels												
Protective functions			Overcurrent shut-off, regenerative overvoltage shut-off, overload shut-off (electronic thermal), servo motor overheat protection, encoder error protection, regenerative error protection, undervoltage protection, instantaneous power failure protection, overspeed protection, error excessive protection, magnetic pole detection protection, and linear servo control error protection												
Functional safety			STO (IEC/EN 61800-5-2)												

Model: MR-J4-_			10TM	20TM	40TM	60TM	70TM	100TM	200TM	350TM	500TM	700TM	11KTM	15KTM	22KTM
Safety performance	Standards certified by CB (Note 10)		EN ISO 13849-1 Category 3 PL e, IEC 61508 SIL 3, EN 62061 SIL CL3, and EN 61800-5-2												
	Response performance		8 ms or less (STO input off → energy shut off)												
	Test pulse input (STO) (Note 3)		Test pulse interval: 1 Hz to 25 Hz Test pulse off time: Up to 1 ms												
	Mean time to dangerous failure (MTTFd)		MTTFd ≥ 100 [years] (314a)												
	Diagnostic coverage (DC)		DC = Medium, 97.6 [%]												
	Average probability of dangerous failures per hour (PFH)		PFH = 6.4 × 10^{-9} [1/h]												
Compliance with global standards	CE marking		LVD: EN 61800-5-1 EMC: EN 61800-3 MD: EN ISO 13849-1, EN 61800-5-2, EN 62061												
	UL standard		UL 508C												
Structure (IP rating)			Natural cooling, open (IP20)				Force cooling, open (IP20)				Force cooling, open (IP20) (Note 4)				
Close mounting (Note 2)	3-phase power supply input		Possible								Impossible				
	1-phase power supply input		Possible					Impossible							
Environment	Ambient temperature	Operation	0 °C to 55 °C (non-freezing)												
		Storage	-20 °C to 65 °C (non-freezing)												
	Ambient humidity	Operation Storage	5 %RH to 90 %RH (non-condensing)												
	Ambience		Indoors (no direct sunlight), free from corrosive gas, flammable gas, oil mist, dust, and dirt												
	Altitude		2000 m or less above sea level (Note 9)												
	Vibration resistance		5.9 m/s^2, at 10 Hz to 55 Hz (directions of X, Y and Z axes)												
Mass		[kg]	1.0				1.4		2.1	2.3	4.0	6.2	13.4		18.2

Note 1. 0.3 A is the value applicable when all I/O signals are used. The current capacity can be decreased by reducing the number of I/O points.
2. When closely mounting the servo amplifiers, operate them at the ambient temperature of 0 °C to 45 °C or at 75% or smaller effective load ratio.
3. Test pulse is a signal which instantaneously turns off a signal to the servo amplifier at a constant period for external circuit to self-diagnose.
4. Except for the terminal block.
5. This value is applicable when a 3-phase power supply is used.
6. The rated current is 2.9 A when the servo amplifier is used with a UL or CSA compliant servo motor.
7. When using 1-phase 200 V AC to 240 V AC power supply, operate the servo amplifier at 75% or smaller effective load ratio.
8. For the connection example of the power circuit when a DC input is used, refer to app. 1.
9. Follow the restrictions in section 2.6 when using this product at altitude exceeding 1000 m and up to 2000 m above sea level.
10. The safety level depends on the setting value of [Pr. PF18 STO diagnosis error detection time] and whether STO input diagnosis by TOFB output is performed or not. For details, refer to the Function column of [Pr. PF18] in section 5.2.6.
11. Use an external dynamic brake for this servo amplifier. Failure to do so will cause an accident because the servo motor does not stop immediately but coasts at emergency stop. Ensure the safety in the entire equipment.
12. The external dynamic brake cannot be used for compliance with SEMI-F47 standard. Do not assign DB (Dynamic brake interlock) in [Pr. PD07] to [Pr. PD09]. Failure to do so will cause the servo amplifier to become servo-off when an instantaneous power failure occurs.

(2) 400 V class

Model: MR-J4-_			60TM4	100TM4	200TM4	350TM4	500TM4	700TM4	11KTM4	15KTM4	22KTM4
Output	Rated voltage		3-phase 323 V AC								
	Rated current	[A]	1.5	2.8	5.4	8.6	14.0	17.0	32.0	41.0	63.0
	Output frequency		Less than 590 Hz								
	Output frequency accuracy		±0.01%								
Main circuit power supply input	Voltage/Frequency		3-phase 380 V AC to 480 V AC, 50 Hz/60 Hz								
	Rated current	[A]	1.4	2.5	5.1	7.9	10.8	14.4	23.1	31.8	47.6
	Permissible voltage fluctuation		3-phase 323 V AC to 528 V AC								
	Permissible frequency fluctuation		Within ±5%								
	Power supply capacity	[kVA]	Refer to section 10.2.								
	Inrush current	[A]	Refer to section 10.5.								
Control circuit power supply	Voltage/Frequency		1-phase 380 V AC to 480 V AC, 50 Hz/60 Hz								
	Rated current	[A]	0.1			0.2					
	Permissible voltage fluctuation		1-phase 323 V AC to 528 V AC								
	Permissible frequency fluctuation		Within ±5%								
	Power consumption	[W]	30			45					
	Inrush current	[A]	Refer to section 10.5.								
Interface power supply	Voltage		24 V DC ± 10%								
	Current capacity	[A]	0.3 (including CN8 connector signals) (Note 1)								
Control method			Sine-wave PWM control, current control method								
Dynamic brake			Built-in						External (Note 6, 7)		
Fully closed loop control			Compatible								
Load-side encoder interface			Mitsubishi Electric high-speed serial communication, A/B/Z-phase differential input signal								
Communication function			USB: connection to a personal computer or others (MR Configurator2-compatible)								
Encoder output pulses			Compatible (A/B/Z-phase pulse)								
Analog monitor			Two channels								
Protective functions			Overcurrent shut-off, regenerative overvoltage shut-off, overload shut-off (electronic thermal), servo motor overheat protection, encoder error protection, regenerative error protection, undervoltage protection, instantaneous power failure protection, overspeed protection, error excessive protection, magnetic pole detection protection, and linear servo control error protection								
Functional safety			STO (IEC/EN 61800-5-2)								
Safety performance	Standards certified by CB (Note 5)		EN ISO 13849-1 Category 3 PL e, IEC 61508 SIL 3, EN 62061 SIL CL3, and EN 61800-5-2								
	Response performance		8 ms or less (STO input off → energy shut off)								
	Test pulse input (STO) (Note 2)		Test pulse interval: 1 Hz to 25 Hz Test pulse off time: Up to 1 ms								
	Mean time to dangerous failure (MTTFd)		MTTFd ≥ 100 [years] (314a)								
	Diagnostic coverage (DC)		DC = Medium, 97.6 [%]								
	Average probability of dangerous failures per hour (PFH)		PFH = 6.4×10^{-9} [1/h]								
Compliance with global standards	CE marking		LVD: EN 61800-5-1 EMC: EN 61800-3 MD: EN ISO 13849-1, EN 61800-5-2, EN 62061								
	UL standard		UL 508C								
Close mounting			Impossible								
Structure (IP rating)			Natural cooling, open (IP20)		Force cooling, open (IP20)		Force cooling, open (IP20) (Note 3)				
Environment	Ambient temperature	Operation	0 °C to 55 °C (non-freezing)								
		Storage	-20 °C to 65 °C (non-freezing)								
	Ambient humidity	Operation Storage	5 %RH to 90 %RH (non-condensing)								
	Ambience		Indoors (no direct sunlight), free from corrosive gas, flammable gas, oil mist, dust, and dirt								
	Altitude		2000 m or less above sea level (Note 4)								
	Vibration resistance		5.9 m/s^2, at 10 Hz to 55 Hz (directions of X, Y and Z axes)								
Mass		[kg]	1.7		2.1	3.6	4.3	6.5	13.4		18.2

Note 1. 0.3 A is the value applicable when all I/O signals are used. The current capacity can be decreased by reducing the number of I/O points.
2. Test pulse is a signal which instantaneously turns off a signal to the servo amplifier at a constant period for external circuit to self-diagnose.
3. Except for the terminal block.
4. Follow the restrictions in section 2.6 when using this product at altitude exceeding 1000 m and up to 2000 m above sea level.
5. The safety level depends on the setting value of [Pr. PF18 STO diagnosis error detection time] and whether STO input diagnosis by TOFB output is performed or not. For details, refer to the Function column of [Pr. PF18] in section 5.2.6.
6. Use an external dynamic brake for this servo amplifier. Failure to do so will cause an accident because the servo motor does not stop immediately but coasts at emergency stop. Ensure the safety in the entire equipment.
7. The external dynamic brake cannot be used for compliance with SEMI-F47 standard. Do not assign DB (Dynamic brake interlock) in [Pr. PD07] to [Pr. PD09]. Failure to do so will cause the servo amplifier to become servo-off when an instantaneous power failure occurs.

(3) 100 V class

Model: MR-J4-_			10TM1	20TM1	40TM1
Output	Rated voltage		3-phase 170 V AC		
	Rated current [A]		1.1	1.5	2.8
	Output frequency		Less than 590 Hz		
	Output frequency accuracy		±0.01%		
Main circuit power supply input	Voltage/Frequency		1-phase 100 V AC to 120 V AC, 50 Hz/60 Hz		
	Rated current [A]		3.0	5.0	9.0
	Permissible voltage fluctuation		1-phase 85 V AC to 132 V AC		
	Permissible frequency fluctuation		Within ±5%		
	Power supply capacity [kVA]		Refer to section 10.2.		
	Inrush current [A]		Refer to section 10.5.		
Control circuit power supply input	Voltage/Frequency		1-phase 100 V AC to 120 V AC, 50 Hz/60 Hz		
	Rated current [A]		0.4		
	Permissible voltage fluctuation		1-phase 85 V AC to 132 V AC		
	Permissible frequency fluctuation		Within ±5%		
	Power consumption [W]		30		
	Inrush current [A]		Refer to section 10.5.		
Interface power supply	Voltage		24 V DC ± 10%		
	Current capacity [A]		0.3 (including CN8 connector signals) (Note 1)		
Control method			Sine-wave PWM control, current control method		
Dynamic brake			Built-in		
Fully closed loop control			Compatible		
Load-side encoder interface			Mitsubishi Electric high-speed serial communication, A/B/Z-phase differential input signal		
Communication function			USB: connection to a personal computer or others (MR Configurator2-compatible)		
Encoder output pulses			Compatible (A/B/Z-phase pulse)		
Analog monitor			Two channels		
Protective functions			Overcurrent shut-off, regenerative overvoltage shut-off, overload shut-off (electronic thermal), servo motor overheat protection, encoder error protection, regenerative error protection, undervoltage protection, instantaneous power failure protection, overspeed protection, error excessive protection, magnetic pole detection protection, and linear servo control error protection		
Functional safety			STO (IEC/EN 61800-5-2)		
Safety performance	Standards certified by CB (Note 6)		EN ISO 13849-1 Category 3 PL e, IEC 61508 SIL 3, EN 62061 SIL CL3, and EN 61800-5-2		
	Response performance		8 ms or less (STO input off → energy shut off)		
	Test pulse input (STO) (Note 3)		Test pulse interval: 1 Hz to 25 Hz Test pulse off time: Up to 1 ms		
	Mean time to dangerous failure (MTTFd)		MTTFd ≥ 100 [years] (314a)		
	Diagnostic coverage (DC)		DC = Medium, 97.6 [%]		
	Average probability of dangerous failures per hour (PFH)		PFH = 6.4×10^{-9} [1/h]		
Compliance with global standards	CE marking		LVD: EN 61800-5-1 EMC: EN 61800-3 MD: EN ISO 13849-1, EN 61800-5-2, EN 62061		
	UL standard		UL 508C		
Structure (IP rating)			Natural cooling, open (IP20)		
Close mounting (Note 2)			Possible		
Environment	Ambient temperature	Operation	0 °C to 55 °C (non-freezing)		
		Storage	-20 °C to 65 °C (non-freezing)		
	Ambient humidity	Operation	5 %RH to 90 %RH (non-condensing)		
		Storage			
	Ambience		Indoors (no direct sunlight), free from corrosive gas, flammable gas, oil mist, dust, and dirt		
	Altitude		2000 m or less above sea level (Note 5)		
	Vibration resistance		5.9 m/s^2, at 10 Hz to 55 Hz (directions of X, Y and Z axes)		
Mass [kg]			1.0		

Note 1. 0.3 A is the value applicable when all I/O signals are used. The current capacity can be decreased by reducing the number of I/O points.
2. When closely mounting the servo amplifiers, operate them at the ambient temperature of 0 ˚C to 45 ˚C or at 75% or smaller effective load ratio.
3. Test pulse is a signal which instantaneously turns off a signal to the servo amplifier at a constant period for external circuit to self-diagnose.
4. Except for the terminal block.
5. Follow the restrictions in section 2.6 when using this product at altitude exceeding 1000 m and up to 2000 m above sea level.
6. The safety level depends on the setting value of [Pr. PF18 STO diagnosis error detection time] and whether STO input diagnosis by TOFB output is performed or not. For details, refer to the Function column of [Pr. PF18] in section 5.2.6.

1.4 Combinations of servo amplifiers and servo motors

POINT

- When a 1-phase 200 V AC input is used, the maximum torque of 400% cannot be achieved with HG-JR series servo motor.
- When you use the MR-J4-100TM or MR-J4-200TM with the 1-phase 200 V AC input, contact your local sales office for the torque characteristics of the HG-UR and HG-RR series servo motors.

(1) 200 V class

Servo amplifier	Rotary servo motor						Linear servo motor (primary side)	Direct drive motor
	HG-KR	HG-MR	HG-SR	HG-UR	HG-RR	HG-JR		
MR-J4-10TM	053 13	053 13						
MR-J4-20TM	23	23					LM-U2PAB-05M-0SS0 LM-U2PBB-07M-1SS0	TM-RFM002C20 TM-RG2M004E30 (Note 1) TM-RU2M004E30 (Note 1)
MR-J4-40TM	43	43					LM-H3P2A-07P-BSS0 LM-H3P3A-12P-CSS0 LM-K2P1A-01M-2SS1 LM-U2PAD-10M-0SS0 LM-U2PAF-15M-0SS0	TM-RFM004C20 TM-RG2M004E30 (Note 1, 3) TM-RU2M004E30 (Note 1, 3) TM-RG2M009G30 (Note 1) TM-RU2M009G30 (Note 1)
MR-J4-60TM			51 52			53	LM-U2PBD-15M-1SS0	TM-RFM006C20 TM-RFM006E20
MR-J4-70TM	73	73		72		73	LM-H3P3B-24P-CSS0 LM-H3P3C-36P-CSS0 LM-H3P7A-24P-ASS0 LM-K2P2A-02M-1SS1 LM-U2PBF-22M-1SS0	TM-RFM012E20 TM-RFM012G20 TM-RFM040J10
MR-J4-100TM			81 102			53 (Note 2) 103		TM-RFM018E20
MR-J4-200TM			121 201 152 202	152	103 153	73 (Note 2) 103 (Note 2) 153 203	LM-H3P3D-48P-CSS0 LM-H3P7B-48P-ASS0 LM-H3P7C-72P-ASS0 LM-FP2B-06M-1SS0 LM-K2P1C-03M-2SS1 LM-U2P2B-40M-2SS0	
MR-J4-350TM			301 352	202	203	153 (Note 2) 203 (Note 2) 353	LM-H3P7D-96P-ASS0 LM-K2P2C-07M-1SS1 LM-K2P3C-14M-1SS1 LM-U2P2C-60M-2SS0	TM-RFM048G20 TM-RFM072G20 TM-RFM120J10
MR-J4-500TM			421 502	352 502	353 503	353 (Note 2) 503	LM-FP2D-12M-1SS0 LM-FP4B-12M-1SS0 LM-K2P2E-12M-1SS1 LM-K2P3E-24M-1SS1 LM-U2P2D-80M-2SS0	TM-RFM240J10
MR-J4-700TM			702			503 (Note 2) 601 701M 703	LM-FP2F-18M-1SS0 LM-FP4D-24M-1SS0	
MR-J4-11KTM						801 12K1 11K1M 903	LM-FP4F-36M-1SS0	
MR-J4-15KTM						15K1 15K1M	LM-FP4F-48M-1SS0	
MR-J4-22KTM						20K1 25K1 22K1M		

Note 1. This is available with servo amplifiers with software version B2 or later.
2. This combination increases the maximum torque of the servo motor to 400%.
3. The combination increases the rated torque and the maximum torque.

(2) 400 V class

Servo amplifier	Rotary servo motor		Linear servo motor (primary side)
	HG-SR	HG-JR	
MR-J4-60TM4	524	534	
MR-J4-100TM4	1024	534 (Note) 734 1034	
MR-J4-200TM4	1524 2024	734 (Note) 1034 (Note) 1534 2034	
MR-J4-350TM4	3524	1534 (Note) 2034 (Note) 3534	
MR-J4-500TM4	5024	3534 (Note) 5034	
MR-J4-700TM4	7024	5034 (Note) 6014 701M4 7034	
MR-J4-11KTM4		8014 12K14 11K1M4 9034	
MR-J4-15KTM4		15K14 15K1M4	
MR-J4-22KTM4		20K14 25K14 22K1M4	LM-FP5H-60M-1SS0

Note. The combination is for increasing the maximum torque of the servo motor to 400%.

(3) 100 V class

Servo amplifier	Rotary servo motor		Linear servo motor (primary side)	Direct drive motor
	HG-KR	HG-MR		
MR-J4-10TM1	053 13	053 13		
MR-J4-20TM1	23	23	LM-U2PAB-05M-0SS0 LM-U2PBB-07M-1SS0	TM-RFM002C20 TM-RG2M004E30 (Note 1) TM-RU2M004E30 (Note 1)
MR-J4-40TM1	43	43	LM-H3P2A-07P-BSS0 LM-H3P3A-12P-CSS0 LM-K2P1A-01M-2SS1 LM-U2PAD-10M-0SS0 LM-U2PAF-15M-0SS0	TM-RFM004C20 TM-RG2M004E30 (Note 1, 2) TM-RU2M004E30 (Note 1, 2) TM-RG2M009G30 (Note 1) TM-RU2M009G30 (Note 1)

Note 1. This is available with servo amplifiers with software version B2 or later.
2. The combination increases the rated torque and the maximum torque.

1.5 Function list

POINT

●Symbols in the network column indicate the following networks.
ECT: EtherCAT
EIP: EtherNet/IP
PNT: PROFINET
EtherNet/IP is available with servo amplifiers with software version B0 or later.
PROFINET is available with servo amplifiers with software version B1 or later.

The following table lists the functions of this servo. For details of the functions, refer to each section of the detailed description field.

Function	Description	Network			Detailed explanation
		ECT	EIP	PNT	
Cyclic synchronous position mode (csp)	The position control operation performed by a synchronous sequential position command through network is supported.	○			(Note)
Cyclic synchronous velocity mode (csv)	The speed control operation performed by a synchronous sequential speed command through network is supported.	○			
Cyclic synchronous torque mode (cst)	The torque control operation performed by a synchronous sequential torque command through network is supported.	○			
Profile position mode (pp)	The positioning operation performed by an asynchronous end position command through network is supported.	○	○	○	
Profile velocity mode (pv)	The speed control operation performed by an asynchronous speed command through network is supported.	○	○	○	
Profile torque mode (tq)	The torque control operation performed by an asynchronous torque command through network is supported.	○	○	○	
Homing mode (hm)	The home position return operation specified in each network is supported.	○	○	○	
Point table mode (pt)	Set 1 to 255 point tables in advance, and select any point table to perform operation in accordance with the set values. This is available with servo amplifiers with software version B2 or later.	○		○	Chapter 18
Indexer mode (idx)	Set the station positions divided into 2 to 255 in advance to perform operation to the station positions. This is available with servo amplifiers with software version B2 or later.	○		○	Chapter 19
Jog mode (jg)	This is a control mode where the servo motor speed is set to drive the servo motor manually. This is available with servo amplifiers with software version B2 or later.	○		○	Chapter 18, Chapter 19
Model adaptive control	This function achieves a high response and stable control following the ideal model. The two-degrees-of-freedom model adaptive control enables you to set a response to the command and response to the disturbance separately. Additionally, this function can be disabled. Refer to section 7.5 for disabling this function.	○	○	○	
Touch probe	When the touch probe signal turns on, the current position is latched.	○	○	○	Section 3.5 (2) [Pr. PD37] (Note)
High-resolution encoder	High-resolution encoder of 4194304 pulses/rev is used for the encoder of the rotary servo motor compatible with the MELSERVO-J4 series.	○	○	○	
Absolute position detection system	Setting a home position once makes home position return unnecessary at every power-on.	○	○	○	Chapter 12
Gain switching function	You can switch gains during rotation/stop, and can use input devices to switch gains during operation.	○	○	○	Section 7.2
Advanced vibration suppression control II	This function suppresses vibration at an arm end or residual vibration.	○	○	○	Section 7.1.5
Machine resonance suppression filter	This filter function (notch filter) decreases the gain of the specific frequency to suppress the resonance of the mechanical system.	○	○	○	Section 7.1.1
Shaft resonance suppression filter	When a load is mounted to the servo motor shaft, resonance by shaft torsion during driving may generate a mechanical vibration at high frequency. The shaft resonance suppression filter suppresses the vibration.	○	○	○	Section 7.1.3
Adaptive filter II	The servo amplifier detects mechanical resonance and sets filter characteristics automatically to suppress mechanical vibration.	○	○	○	Section 7.1.2
Low-pass filter	Suppresses high-frequency resonance which occurs as the servo system response is increased.	○	○	○	Section 7.1.4

Function	Description	Network			Detailed explanation
		ECT	EIP	PNT	
Machine analyzer function	Analyzes the frequency characteristic of the mechanical system by simply connecting an MR Configurator2 installed personal computer and the servo amplifier. MR Configurator2 is necessary for this function.	○	○	○	
Robust filter	For roll feed axis, etc. of which a response level cannot be increased because of the large load to motor inertia ratio, this function improves a disturbance response.	○	○	○	[Pr. PE41]
Slight vibration suppression control	This function suppresses vibration of ±1 pulse generated at a servo motor stop.	○	○	○	[Pr. PB24]
Electronic gear	Positioning control is performed with the value obtained by multiplying the position command from the controller by a set electronic gear ratio.	○	○	○	[Pr. PA06] [Pr. PA07]
S-pattern acceleration/deceleration time constant	Speed can be increased and decreased smoothly.	○	○	○	[Pr. PT51]
Auto tuning	Automatically adjusts the gain to optimum value if load applied to the servo motor shaft varies.	○	○	○	Section 6.3
Brake unit	Use the brake unit when the regenerative option cannot provide sufficient regenerative capability. Can be used for the 5 kW or more servo amplifier.	○	○	○	Section 11.3
Power regeneration converter	Use the power regeneration converter when the regenerative option cannot provide sufficient regenerative capacity. Can be used for the 5 kW or more servo amplifier.	○	○	○	Section 11.4
Regenerative option	Use a regenerative option when the built-in regenerative resistor of the servo amplifier does not have sufficient regenerative capacity for a large regenerative power generated.	○	○	○	Section 11.2
Alarm history clear	Clears alarm histories.	○	○	○	[Pr. PC21]
Input signal selection (device settings)	The input devices including LSP (forward rotation stroke end) and LSN (reverse rotation stroke end) can be assigned to certain pins of the CN3 connector.	○	○	○	[Pr. PD03] to [Pr. PD05]
Output signal selection (device settings)	The output devices including MBR (Electromagnetic brake interlock) can be assigned to certain pins of the CN3 connector.	○	○	○	[Pr. PD07] to [Pr. PD09]
Output signal (DO) forced output	Turns on/off the output signals forcibly independently of the servo status. Use this function for checking output signal wiring, etc.	○	○	○	Section 4.5.1 (1) (d)
Torque limit	Limits the servo motor torque.	○	○	○	[Pr. PA11] [Pr. PA12]
Speed limit	The servo motor speed can be limited.	○	○	○	[Pr. PT67]
Status display	Shows servo status on the 3-digit, 7-segment LED display.	○	○	○	Section 4.3
Test operation mode	JOG operation, positioning operation, motor-less operation, DO forced output, program operation and single-step feed MR Configurator2 is necessary for this function.	○	○	○	Section 4.5
Analog monitor output	Outputs servo status with voltage in real time.	○	○	○	[Pr. PC09] [Pr. PC10]
MR Configurator2	Using a personal computer, you can perform the parameter setting, test operation, monitoring, and others.	○	○	○	Section 11.7
Linear servo system	Linear servo systems can be configured using a linear servo motor and linear encoder.	○	○	○	Chapter 14
Direct drive servo system	Direct drive servo systems can be configured to drive a direct drive motor.	○	○	○	Chapter 15
Fully closed loop system	Fully closed loop system can be configured using the load-side encoder.	○	○	○	Chapter 16
One-touch tuning	Gain adjustment is performed just by one click a certain button on MR Configurator2. Also, one-touch tuning can be performed via a network. For details, refer to respective communication method manuals of "MR-J4-_TM_ Servo Amplifier Instruction Manual".	○	○	○	Section 6.2
SEMI-F47 function	This function enables to avoid triggering [AL. 10 Undervoltage] using the electrical energy charged in the capacitor in case that an instantaneous power failure occurs during operation. Use a 3-phase for the input power supply of the servo amplifier. Using a 1-phase 100 V AC/200 V AC for the input power supply will not comply with SEMI-F47 standard.	○	○	○	[Pr. PA20] [Pr. PF25] Section 7.4
Tough drive function	This function makes the equipment continue operating even under the condition that an alarm occurs. The tough drive function includes two types: the vibration tough drive and the instantaneous power failure tough drive.	○	○	○	Section 7.3
Drive recorder function	This function continuously monitors the servo status and records the status transition before and after an alarm for a fixed period of time. You can check the recorded data on the drive recorder window of MR Configurator2 by clicking the "Graph" button. However, the drive recorder is not available when: 1. You are using the graph function of MR Configurator2. 2. You are using the machine analyzer function. 3. [Pr. PF21] is set to "-1". 4. The controller is not connected (except the test operation mode). 5. An alarm related to the controller has occurred.	○	○	○	[Pr. PA23]

Function	Description	Network			Detailed explanation
		ECT	EIP	PNT	
STO function	This amplifier complies with the STO function as functional safety of IEC/EN 61800-5-2. You can create a safety system for the equipment easily.	○	○	○	Chapter 13
Servo amplifier life diagnosis function	You can check the cumulative energization time and the number of on/off times of the inrush relay. This function gives an indication of the replacement time for parts of the servo amplifier including a capacitor and a relay before they malfunction. MR Configurator2 is necessary for this function. Also, the servo amplifier life diagnosis function can be used via a network. For details, refer to respective communication method manuals of "MR-J4-_TM_ Servo Amplifier Instruction Manual".	○	○	○	
Power monitoring function	This function calculates the power running energy and the regenerative power from the data in the servo amplifier such as speed and current. Power consumption and others are displayed on MR Configurator2. Also, the power monitoring function can be used via a network. For details, refer to respective communication method manuals of "MR-J4-_TM_ Servo Amplifier Instruction Manual".	○	○	○	
Machine diagnosis function	From the data in the servo amplifier, this function estimates the friction and vibrational component of the drive system in the equipment and recognizes an error in the machine parts, including a ball screw and bearing. MR Configurator2 is necessary for this function. Also, the machine diagnosis function can be used via a network. For details, refer to respective communication method manuals of "MR-J4-_TM_ Servo Amplifier Instruction Manual".	○	○	○	
Scale measurement function	The function transmits position information of a scale measurement encoder to the controller by connecting the scale measurement encoder in semi closed loop control. This is available with servo amplifiers with software version B0 or later. Check the software version with MR Configurator2.	○	○		Section 17.1
MR-D30 functional safety unit	The MR-D30 functional safety unit is supported.	○	○	○	Section 17.2
Lost motion compensation function	This function improves the response delay generated when the machine moving direction is reversed.	○	○	○	Section 7.6
Super trace control	This function sets constant and uniform acceleration/deceleration droop pulses to almost 0.	○	○	○	Section 7.7
Superimposed synchronous control function	This function drives the servo motor by using externally input pulses as the master.		○		(Note)
Positioning function by operation start-up signal	This function starts positioning with an input signal.		○		(Note)
FoE (File Access over EtherCAT)	This servo amplifier supports FoE (File Access over EtherCAT). For details, contact your local sales office. This is used with servo amplifiers with software version B3 or later.	○			

Note. For details, refer to respective communication method manuals of "MR-J4-_TM_ Servo Amplifier Instruction Manual".

1.6 Model designation

(1) Rating plate

The following shows an example of rating plate for explanation of each item.

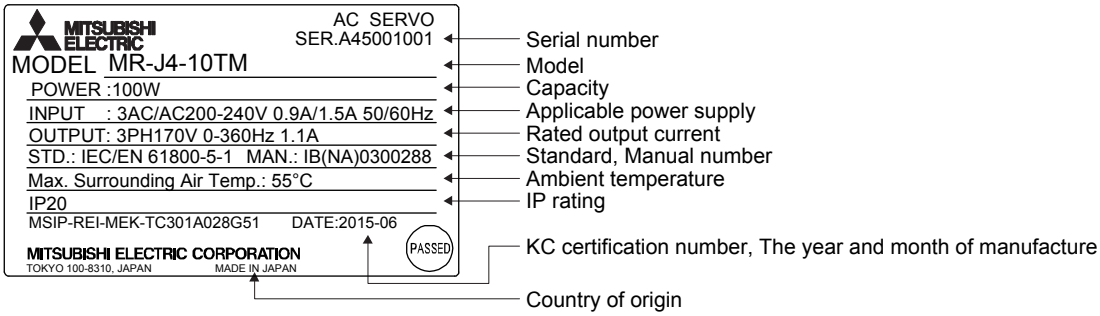

(2) Model

The following describes what each block of a model name indicates. Not all combinations of the symbols are available.

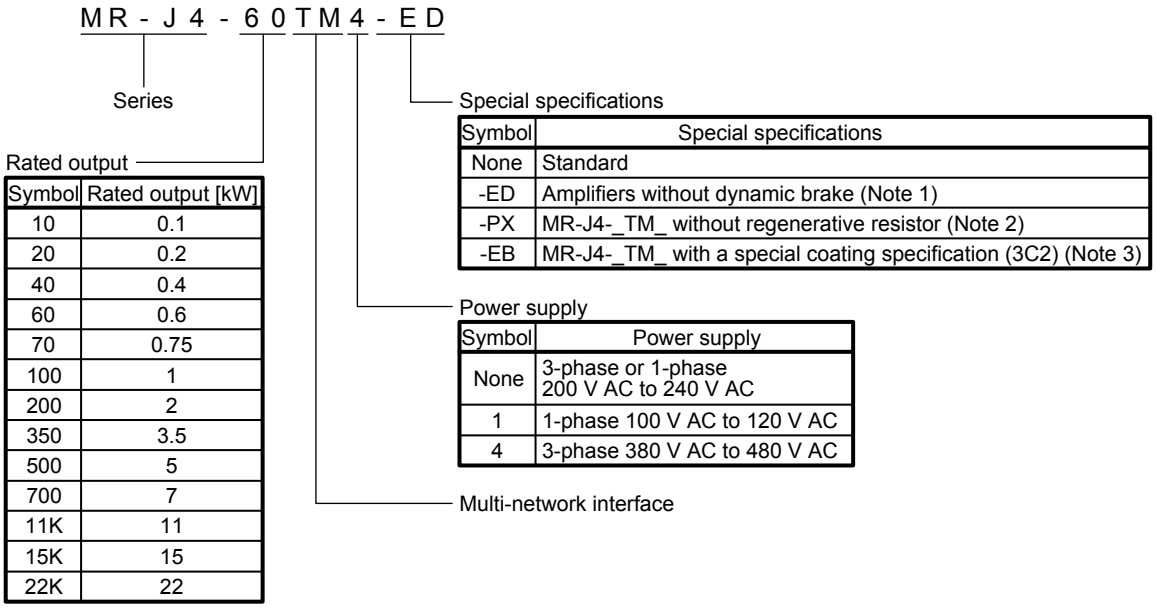

Symbol	Rated output [kW]
10	0.1
20	0.2
40	0.4
60	0.6
70	0.75
100	1
200	2
350	3.5
500	5
700	7
11K	11
15K	15
22K	22

Symbol	Special specifications
None	Standard
-ED	Amplifiers without dynamic brake (Note 1)
-PX	MR-J4-_TM_ without regenerative resistor (Note 2)
-EB	MR-J4-_TM_ with a special coating specification (3C2) (Note 3)

Symbol	Power supply
None	3-phase or 1-phase 200 V AC to 240 V AC
1	1-phase 100 V AC to 120 V AC
4	3-phase 380 V AC to 480 V AC

Note 1. Dynamic brake which is built in 7 kw or smaller servo amplifiers is removed. Refer to app. 9.1 for details.
2. Indicates a servo amplifier of 11 kW to 22 kW that does not use a regenerative resistor as standard accessory. Refer to app. 9.2 for details.
3. Type with a specially-coated servo amplifier board (IEC 60721-3-3 Class 3C2). Refer to app. 9.3 for details.

1.7 Structure

1.7.1 Parts identification

(1) 200 V class

(a) MR-J4-200TM or less

The diagram is for MR-J4-10TM.

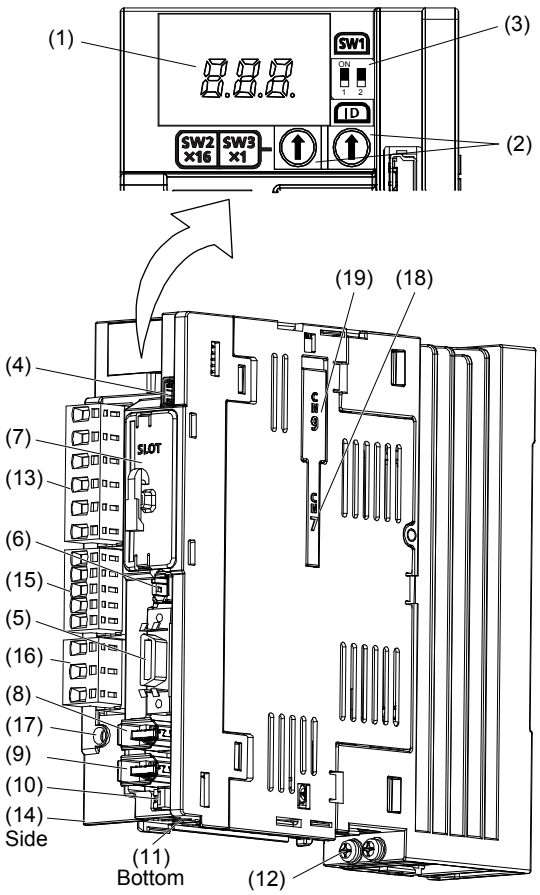

No.	Name/Application	Detailed explanation
(1)	Display The 3-digit, 7-segment LED shows the servo status and the alarm number.	Section 4.3
(2)	Axis selection rotary switch (SW2/SW3) Used to set the axis No. of servo amplifier.	
(3)	Mode select switch (SW1) Set the test operation mode. (SW1-1)	
(4)	USB communication connector (CN5) Connect with the personal computer.	Section 11.7
(5)	I/O signal connector (CN3) Used to connect digital I/O signals.	Section 3.2 Section 3.4
(6)	STO input signal connector (CN8) Used to connect MR-J3-D05 safety logic unit and external safety relay.	Chapter 13 App. 5
(7)	Network module slot (SLOT) Insert the network module.	Section 1.7.3
(8) (Note)	Encoder connector (CN2) Used to connect the servo motor encoder. Used to connect the servo motor encoder or external encoder. Refer to table 1.1 for the compatible external encoders.	Section 3.4 "Servo Motor Instruction Manual (Vol. 3)"
(9) (Note)	External encoder connector (CN2L) Used to connect the external encoder. Refer to table 1.1 for connections of external encoders.	Section 3.4 "Linear Encoder Instruction Manual"
(10)	Battery connector (CN4) Used to connect the battery for absolute position data backup.	Chapter 12
(11)	Battery holder Install the battery for absolute position data backup.	Section 12.2
(12)	Protective earth (PE) terminal	Section 3.1 Section 3.3
(13)	Main circuit power connector (CNP1) Connect the input power supply.	
(14)	Rating plate	Section 1.6
(15)	Control circuit power connector (CNP2) Connect the control circuit power supply and regenerative option.	Section 3.1 Section 3.3
(16)	Servo motor power output connector (CNP3) Connect the servo motor.	
(17)	Charge lamp When the main circuit is charged, this will light. While this lamp is lit, do not reconnect the cables.	
(18)	Optional unit connector 1 (CN7) This is for connecting the optional unit.	
(19)	Optional unit connector 2 (CN9) This is for connecting the optional unit.	

Note. "External encoder" is a term for linear encoder used in the linear servo system and load-side encoder used in the fully closed loop system in this manual.

(b) MR-J4-350TM

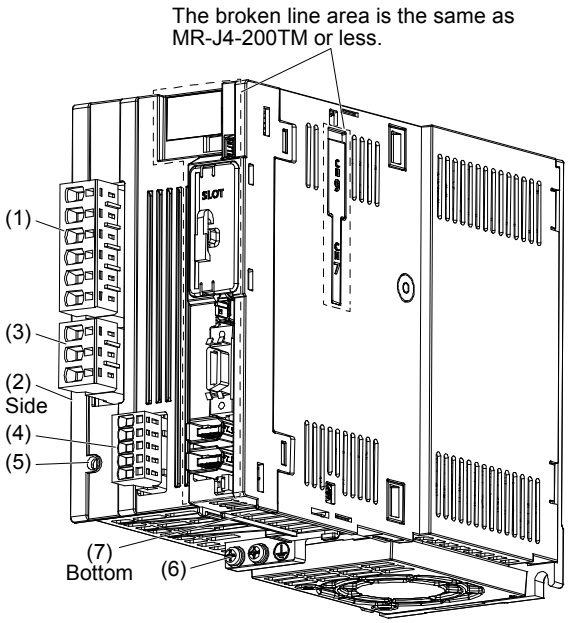

No.	Name/Application	Detailed explanation
(1)	Main circuit power connector (CNP1) Connect the input power supply.	Section 3.1 Section 3.3
(2)	Rating plate	Section 1.6
(3)	Servo motor power output connector (CNP3) Connect the servo motor.	Section 3.1 Section 3.3
(4)	Control circuit power connector (CNP2) Connect the control circuit power supply and regenerative option.	
(5)	Charge lamp When the main circuit is charged, this will light. While this lamp is lit, do not reconnect the cables.	
(6)	Protective earth (PE) terminal	Section 3.1 Section 3.3
(7)	Battery holder Install the battery for absolute position data backup.	Section 12.2

(c) MR-J4-500TM

POINT

●The servo amplifier is shown with the front cover open. The front cover cannot be removed.

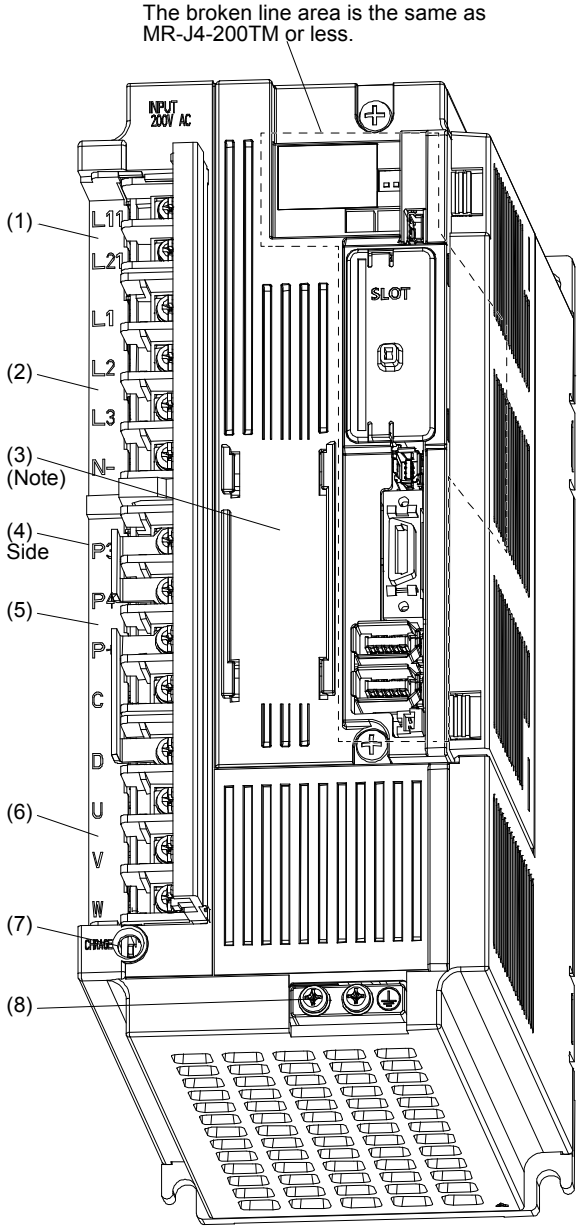

No.	Name/Application	Detailed explanation
(1)	Control circuit terminal block (TE2) Used to connect the control circuit power supply.	Section 3.1 Section 3.3
(2)	Main circuit terminal block (TE1) Connect the input power supply.	
(3)	Battery holder Install the battery for absolute position data backup.	Section 12.2
(4)	Rating plate	Section 1.6
(5)	Regenerative option/power factor improving reactor terminal block (TE3) Used to a connect a regenerative option and a power factor improving DC reactor.	Section 3.1 Section 3.3
(6)	Servo motor power output terminal block (TE4) Connect the servo motor.	
(7)	Charge lamp When the main circuit is charged, this will light. While this lamp is lit, do not reconnect the cables.	
(8)	Protective earth (PE) terminal	Section 3.1 Section 3.3

Note. Lines for slots around the battery holder are omitted from the illustration.

(d) MR-J4-700TM

POINT
●The servo amplifier is shown without the front cover. For removal of the front cover, refer to section 1.7.2.

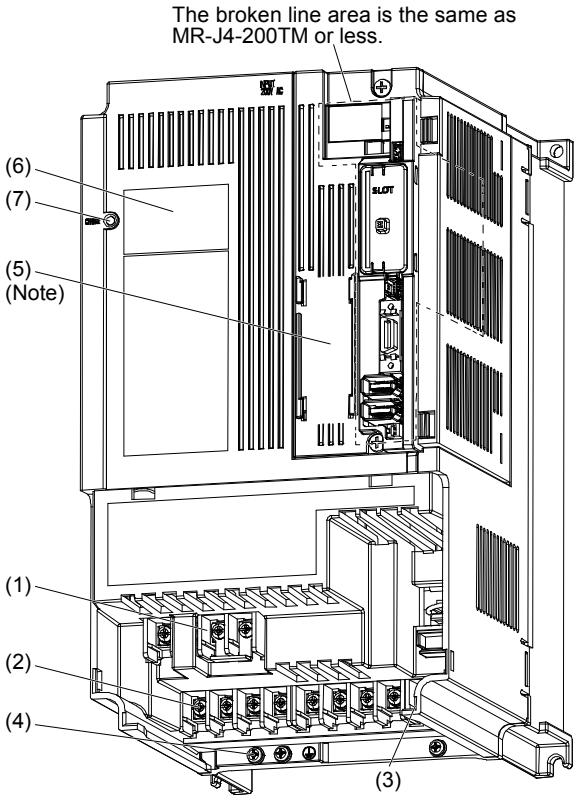

No.	Name/Application	Detailed explanation
(1)	Power factor improving reactor terminal block (TE3) Used to connect the DC reactor.	Section 3.1 Section 3.3
(2)	Main circuit terminal block (TE1) Used to connect the input power supply, regenerative option, and servo motor.	
(3)	Control circuit terminal block (TE2) Used to connect the control circuit power supply.	
(4)	Protective earth (PE) terminal	
(5)	Battery holder Install the battery for absolute position data backup.	Section 12.2
(6)	Rating plate	Section 1.6
(7)	Charge lamp When the main circuit is charged, this will light. While this lamp is lit, do not reconnect the cables.	

Note. Lines for slots around the battery holder are omitted from the illustration.

(e) MR-J4-11KTM/MR-J4-15KTM

POINT

●The servo amplifier is shown without the front cover. For removal of the front cover, refer to section 1.7.2.

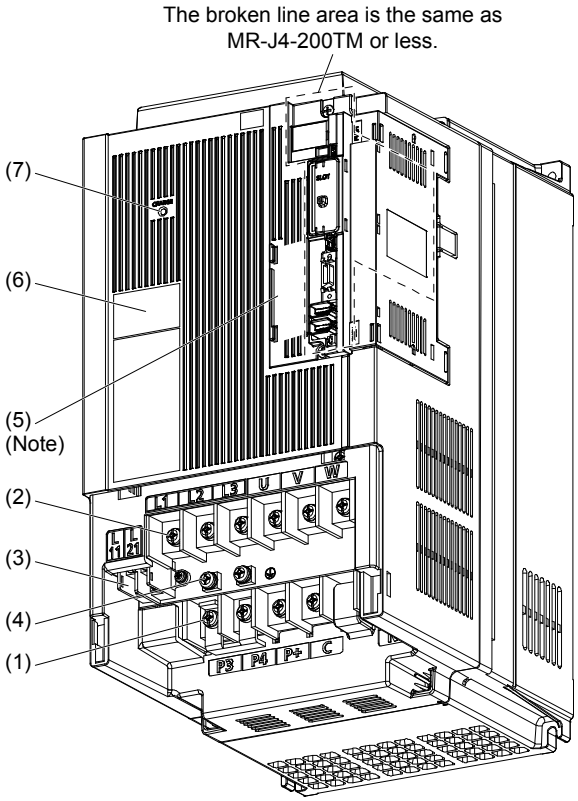

No.	Name/Application	Detailed explanation
(1)	Power factor improving reactor terminal block (TE1-2) Used to connect a power factor improving DC reactor and a regenerative option.	Section 3.1 Section 3.3
(2)	Main circuit terminal block (TE1-1) Used to connect the input power supply and servo motor.	
(3)	Control circuit terminal block (TE2) Used to connect the control circuit power supply.	
(4)	Protective earth (PE) terminal	
(5)	Battery holder Install the battery for absolute position data backup.	Section 12.2
(6)	Rating plate	Section 1.6
(7)	Charge lamp When the main circuit is charged, this will light up. While this lamp is lit, do not reconnect the cables.	

Note. Lines for slots around the battery holder are omitted from the illustration.

(f) MR-J4-22KTM

POINT
●The servo amplifier is shown without the front cover. For removal of the front cover, refer to section 1.7.2.

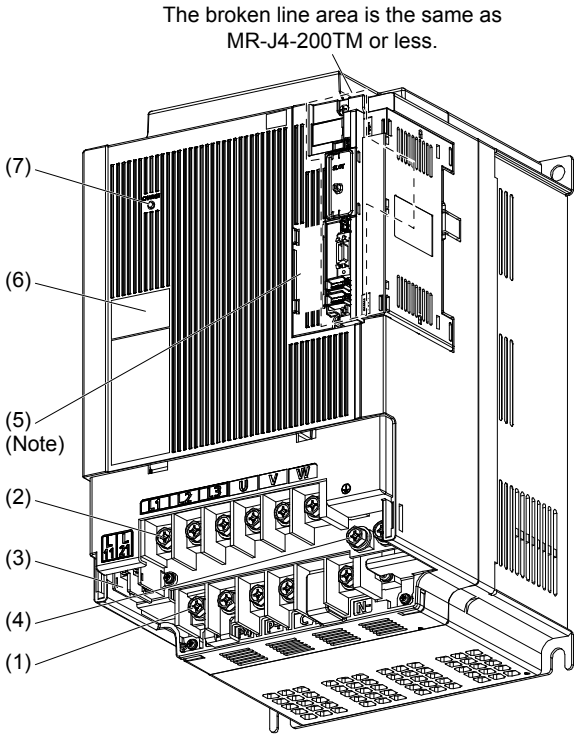

No.	Name/Application	Detailed explanation
(1)	Power factor improving reactor terminal block (TE1-2) Used to connect a power factor improving DC reactor and a regenerative option.	Section 3.1 Section 3.3
(2)	Main circuit terminal block (TE1-1) Used to connect the input power supply and servo motor.	
(3)	Control circuit terminal block (TE2) Used to connect the control circuit power supply.	
(4)	Protective earth (PE) terminal	
(5)	Battery holder Install the battery for absolute position data backup.	Section 12.2
(6)	Rating plate	Section 1.6
(7)	Charge lamp When the main circuit is charged, this will light up. While this lamp is lit, do not reconnect the cables.	

Note. Lines for slots around the battery holder are omitted from the illustration.

(2) 400 V class

(a) MR-J4-200TM4 or less

The diagram is for MR-J4-60TM4.

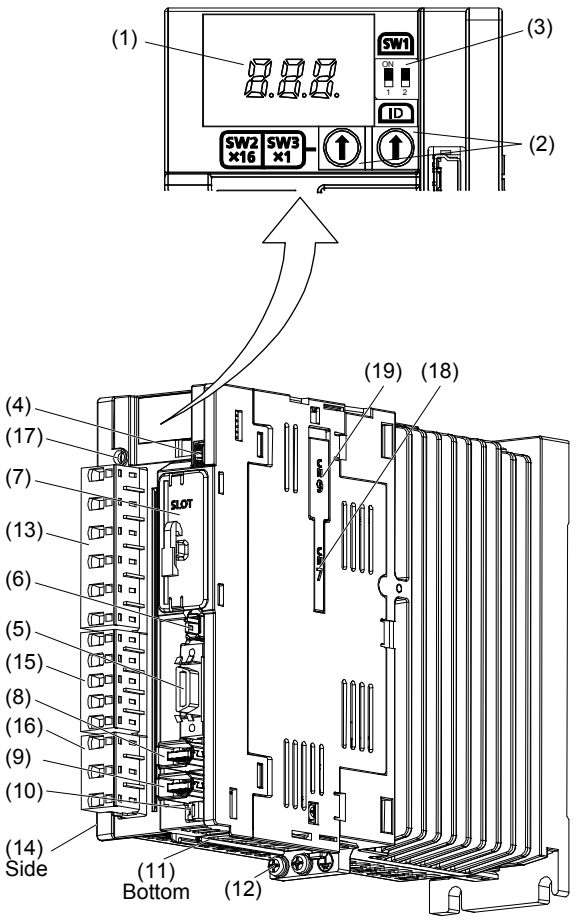

No.	Name/Application	Detailed explanation
(1)	Display The 3-digit, 7-segment LED shows the servo status and the alarm number.	Section 4.3
(2)	Axis selection rotary switch (SW2/SW3) Used to set the axis No. of servo amplifier.	
(3)	Mode select switch (SW1) Set the test operation mode. (SW1-1)	
(4)	USB communication connector (CN5) Connect with the personal computer.	Section 11.7
(5)	I/O signal connector (CN3) Used to connect digital I/O signals.	Section 3.2 Section 3.4
(6)	STO input signal connector (CN8) Used to connect MR-J3-D05 safety logic unit and external safety relay.	Chapter 13 App. 5
(7)	Network module slot (SLOT) Insert the network module.	Section 1.7.3
(8) (Note)	Encoder connector (CN2) Used to connect the servo motor encoder. Used to connect the servo motor encoder or external encoder. Refer to table 1.1 for the compatible external encoders.	Section 3.4 "Servo Motor Instruction Manual (Vol. 3)"
(9) (Note)	External encoder connector (CN2L) Used to connect the external encoder. Refer to table 1.1 for connections of external encoders.	Section 3.4 "Linear Encoder Instruction Manual"
(10)	Battery connector (CN4) Used to connect the battery for absolute position data backup.	Chapter 12
(11)	Battery holder Install the battery for absolute position data backup.	Section 12.2
(12)	Protective earth (PE) terminal	Section 3.1 Section 3.3
(13)	Main circuit power connector (CNP1) Connect the input power supply.	
(14)	Rating plate	Section 1.6
(15)	Control circuit power connector (CNP2) Connect the control circuit power supply and regenerative option.	Section 3.1 Section 3.3
(16)	Servo motor power output connector (CNP3) Connect the servo motor.	
(17)	Charge lamp When the main circuit is charged, this will light. While this lamp is lit, do not reconnect the cables.	
(18)	Optional unit connector 1 (CN7) This is for connecting the optional unit.	
(19)	Optional unit connector 2 (CN9) This is for connecting the optional unit.	

Note. "External encoder" is a term for linear encoder used in the linear servo system and load-side encoder used in the fully closed loop system in this manual.

(b) MR-J4-350TM4

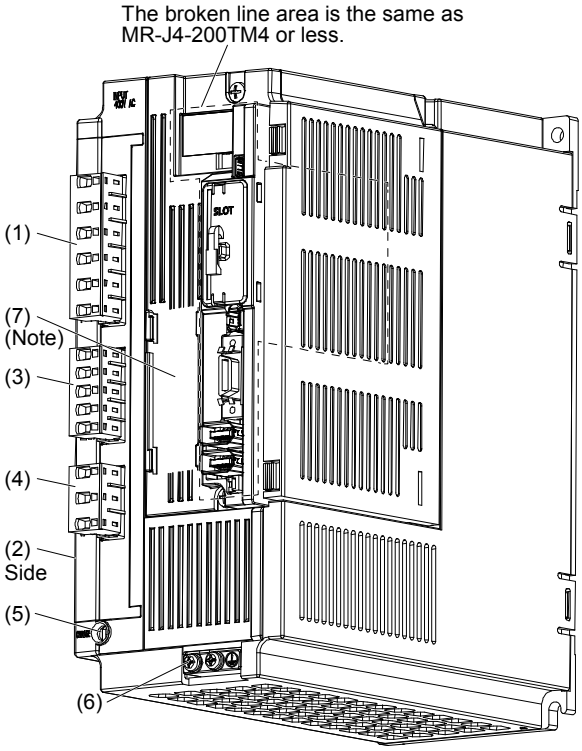

No.	Name/Application	Detailed explanation
(1)	Main circuit power connector (CNP1) Connect the input power supply.	Section 3.1 Section 3.3
(2)	Rating plate	Section 1.6
(3)	Control circuit power connector (CNP2) Connect the control circuit power supply and regenerative option.	Section 3.1 Section 3.3
(4)	Servo motor power output connector (CNP3) Connect the servo motor.	
(5)	Charge lamp When the main circuit is charged, this will light. While this lamp is lit, do not reconnect the cables.	
(6)	Protective earth (PE) terminal	Section 3.1 Section 3.3
(7)	Battery holder Install the battery for absolute position data backup.	Section 12.2

Note. Lines for slots around the battery holder are omitted from the illustration.

(c) MR-J4-500TM4

POINT
●The servo amplifier is shown without the front cover. For removal of the front cover, refer to section 1.7.2.

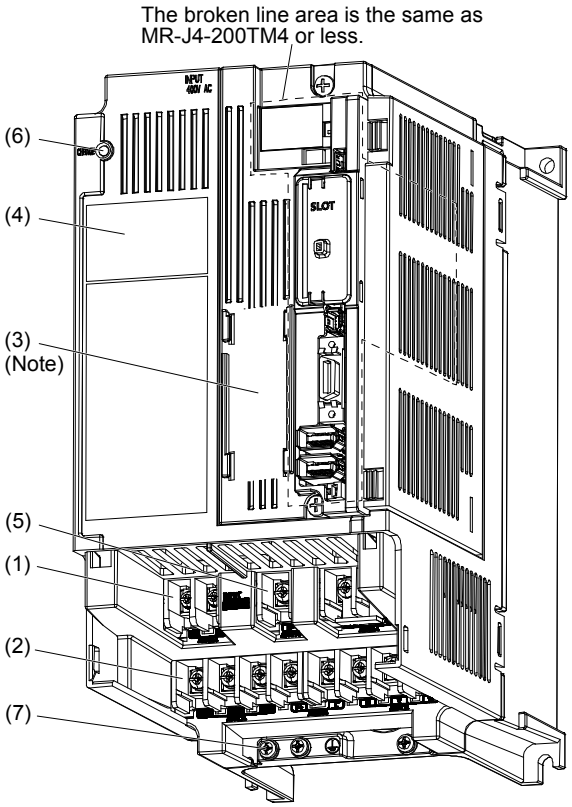

No.	Name/Application	Detailed explanation
(1)	Control circuit terminal block (TE2) Used to connect the control circuit power supply.	Section 3.1 Section 3.3
(2)	Main circuit terminal block (TE1) Used to connect the input power supply, regenerative option, and servo motor.	
(3)	Battery holder Install the battery for absolute position data backup.	Section 12.2
(4)	Rating plate	Section 1.6
(5)	Power factor improving reactor terminal block (TE3) Used to connect a power factor improving DC reactor.	Section 3.1 Section 3.3
(6)	Charge lamp When the main circuit is charged, this will light. While this lamp is lit, do not reconnect the cables.	
(7)	Protective earth (PE) terminal	Section 3.1 Section 3.3

Note. Lines for slots around the battery holder are omitted from the illustration.

(d) MR-J4-700TM4

POINT

●The servo amplifier is shown without the front cover. For removal of the front cover, refer to section 1.7.2.

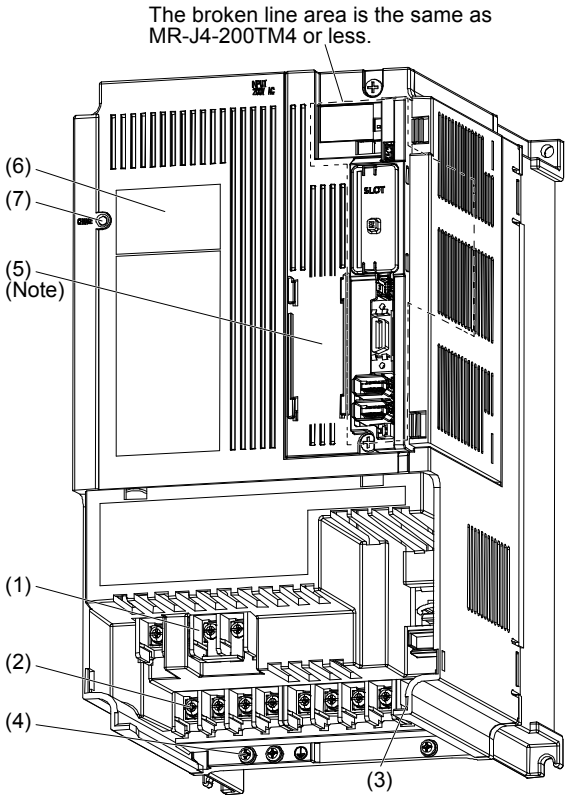

No.	Name/Application	Detailed explanation
(1)	Power factor improving reactor terminal block (TE3) Used to connect the DC reactor.	Section 3.1 Section 3.3
(2)	Main circuit terminal block (TE1) Used to connect the input power supply, regenerative option, and servo motor.	
(3)	Control circuit terminal block (TE2) Used to connect the control circuit power supply.	
(4)	Protective earth (PE) terminal	
(5)	Battery holder Install the battery for absolute position data backup.	Section 12.2
(6)	Rating plate	Section 1.6
(7)	Charge lamp When the main circuit is charged, this will light. While this lamp is lit, do not reconnect the cables.	

Note. Lines for slots around the battery holder are omitted from the illustration.

(e) MR-J4-11KTM4/MR-J4-15KTM4

POINT

●The servo amplifier is shown without the front cover. For removal of the front cover, refer to section 1.7.2.

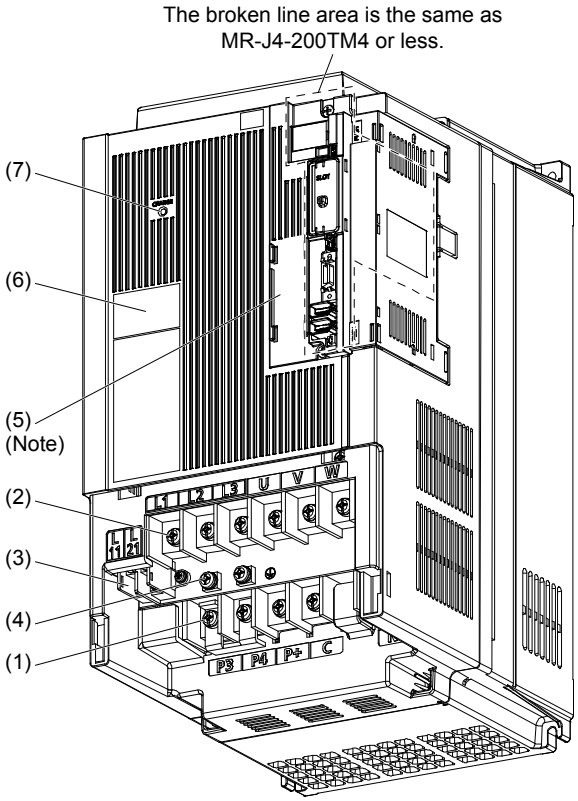

No.	Name/Application	Detailed explanation
(1)	Power factor improving reactor terminal block (TE1-2) Used to connect a power factor improving DC reactor and a regenerative option.	Section 3.1 Section 3.3
(2)	Main circuit terminal block (TE1-1) Used to connect the input power supply and servo motor.	
(3)	Control circuit terminal block (TE2) Used to connect the control circuit power supply.	
(4)	Protective earth (PE) terminal	
(5)	Battery holder Install the battery for absolute position data backup.	Section 12.2
(6)	Rating plate	Section 1.6
(7)	Charge lamp When the main circuit is charged, this will light up. While this lamp is lit, do not reconnect the cables.	

Note. Lines for slots around the battery holder are omitted from the illustration.

(f) MR-J4-22KTM4

POINT
●The servo amplifier is shown without the front cover. For removal of the front cover, refer to section 1.7.2.

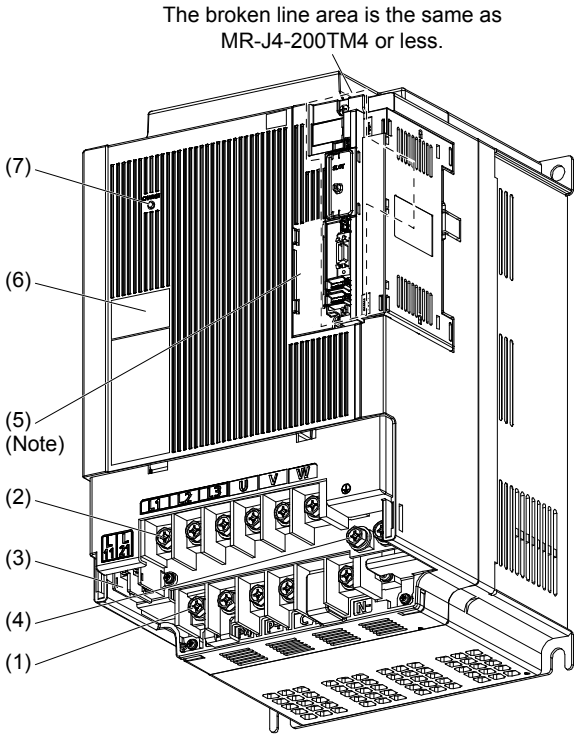

No.	Name/Application	Detailed explanation
(1)	Power factor improving reactor terminal block (TE1-2) Used to connect a power factor improving DC reactor and a regenerative option.	Section 3.1 Section 3.3
(2)	Main circuit terminal block (TE1-1) Used to connect the input power supply and servo motor.	
(3)	Control circuit terminal block (TE2) Used to connect the control circuit power supply.	
(4)	Protective earth (PE) terminal	
(5)	Battery holder Install the battery for absolute position data backup.	Section 12.2
(6)	Rating plate	Section 1.6
(7)	Charge lamp When the main circuit is charged, this will light up. While this lamp is lit, do not reconnect the cables.	

Note. Lines for slots around the battery holder are omitted from the illustration.

(3) 100 V class

The diagram is for MR-J4-10TM1.

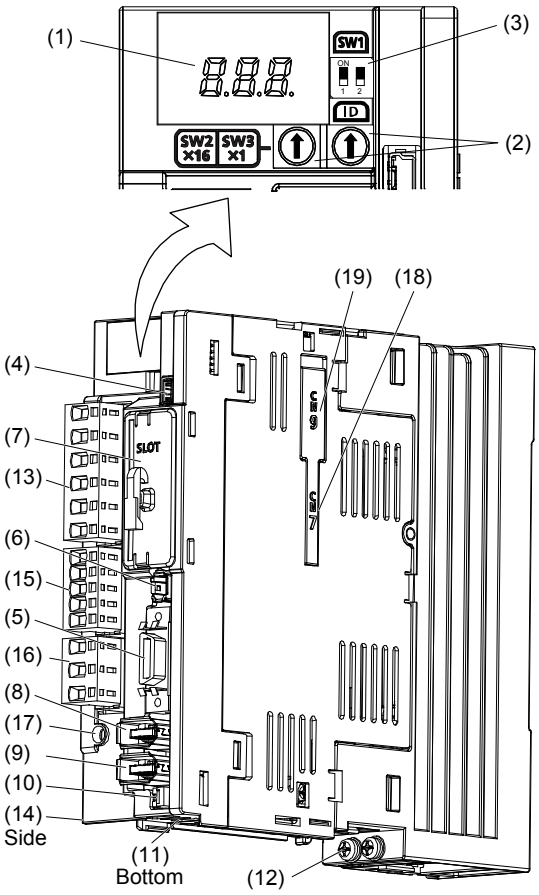

No.	Name/Application	Detailed explanation
(1)	Display The 3-digit, 7-segment LED shows the servo status and the alarm number.	Section 4.3
(2)	Axis selection rotary switch (SW2/SW3) Used to set the axis No. of servo amplifier.	
(3)	Mode select switch (SW1) Set the test operation mode. (SW1-1)	
(4)	USB communication connector (CN5) Connect with the personal computer.	Section 11.7
(5)	I/O signal connector (CN3) Used to connect digital I/O signals.	Section 3.2 Section 3.4
(6)	STO input signal connector (CN8) Used to connect MR-J3-D05 safety logic unit and external safety relay.	Chapter 13 App. 5
(7)	Network module slot (SLOT) Insert the network module.	Section 1.7.3
(8) (Note)	Encoder connector (CN2) Used to connect the servo motor encoder. Used to connect the servo motor encoder or external encoder. Refer to table 1.1 for the compatible external encoders.	Section 3.4 "Servo Motor Instruction Manual (Vol. 3)"
(9) (Note)	External encoder connector (CN2L) Used to connect the external encoder. Refer to table 1.1 for connections of external encoders.	Section 3.4 "Linear Encoder Instruction Manual"
(10)	Battery connector (CN4) Used to connect the battery for absolute position data backup.	Chapter 12
(11)	Battery holder Install the battery for absolute position data backup.	Section 12.2
(12)	Protective earth (PE) terminal	Section 3.1 Section 3.3
(13)	Main circuit power connector (CNP1) Connect the input power supply.	
(14)	Rating plate	Section 1.6
(15)	Control circuit power connector (CNP2) Connect the control circuit power supply and regenerative option.	Section 3.1 Section 3.3
(16)	Servo motor power output connector (CNP3) Connect the servo motor.	
(17)	Charge lamp When the main circuit is charged, this will light. While this lamp is lit, do not reconnect the cables.	
(18)	Optional unit connector 1 (CN7) This is for connecting the optional unit.	
(19)	Optional unit connector 2 (CN9) This is for connecting the optional unit.	

Note. "External encoder" is a term for linear encoder used in the linear servo system and load-side encoder used in the fully closed loop system in this manual.

1.7.2 Removal and reinstallation of the front cover

⚠WARNING	●Before removing or installing the front cover, turn off the power and wait for 15 minutes or more until the charge lamp turns off. Then, confirm that the voltage between P+ and N- is safe with a voltage tester and others. Otherwise, an electric shock may occur. In addition, when confirming whether the charge lamp is off or not, always confirm it from the front of the servo amplifier.

The following shows how to remove and reinstall the front cover of MR-J4-700TM to MR-J4-22KTM and MR-J4-500TM4 to MR-J4-22KTM4.
The diagram is for MR-J4-700TM.

(1) Removal of the front cover

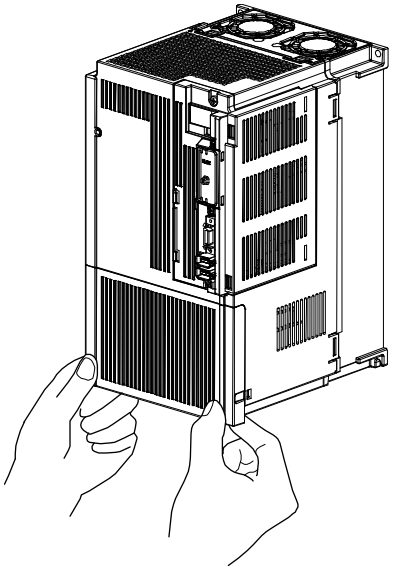

1) Hold the ends of lower side of the front cover with both hands.

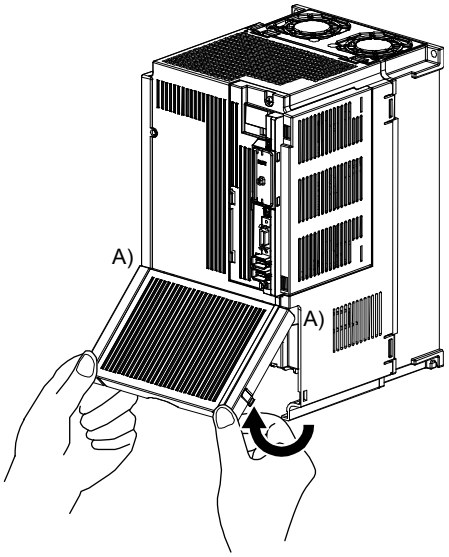

2) Pull up the cover, supporting at point A).

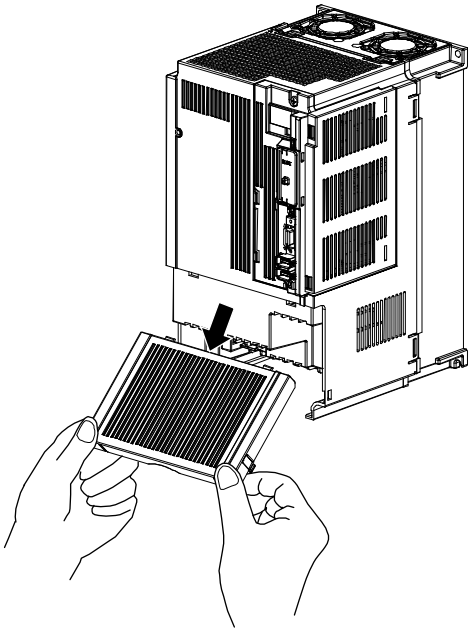

3) Pull out the front cover to remove.

(2) Reinstallation of the front cover

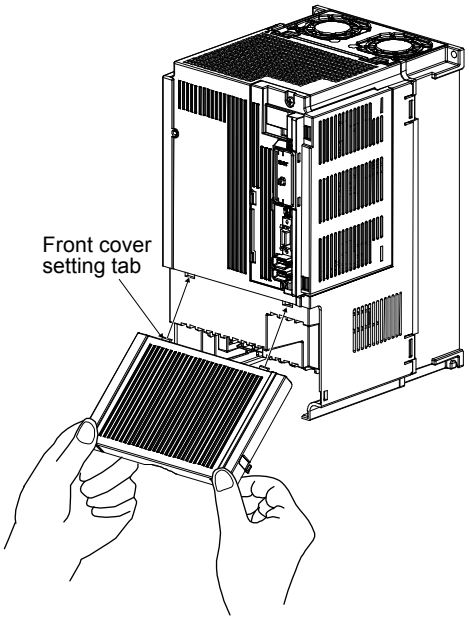

1) Insert the front cover setting tabs into the sockets of servo amplifier (2 places).

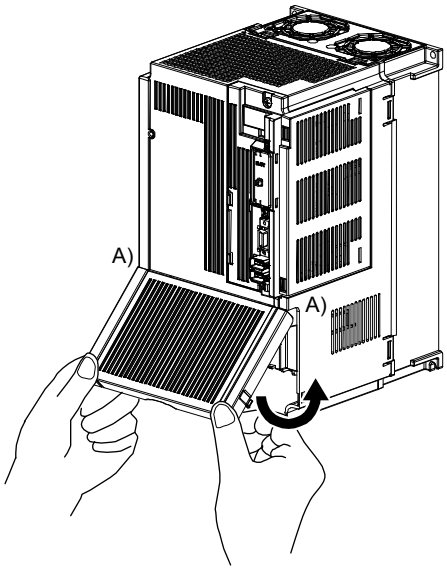

2) Push down the cover, supporting at point A).

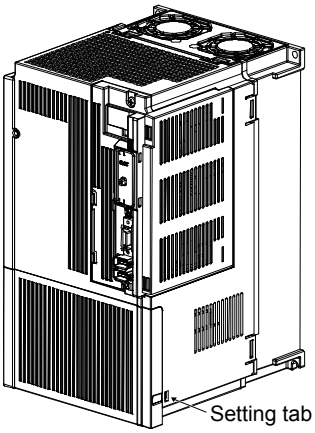

3) Press the cover against the terminal box until the installing knobs click.

1.7.3 Installation and removal of network module

⚠WARNING	●Before installing or removing network module, turn off the power and wait for 15 minutes or more until the charge lamp turns off. Then, confirm that the voltage between P+ and N- is safe with a voltage tester and others. Otherwise, an electric shock may occur. In addition, when confirming whether the charge lamp is off or not, always confirm it from the front of the servo amplifier.

⚠CAUTION	●Avoid installing and removing the network module repeatedly. Any contact failure of the connector may be caused.

POINT

●The internal circuits of the servo amplifier and the network module may be damaged by static electricity. Always take the following precautions.
- Ground human body and work bench.
- Do not touch the conductive areas, such as connector pins and electrical parts, directly by hand.

(1) Installation of network module

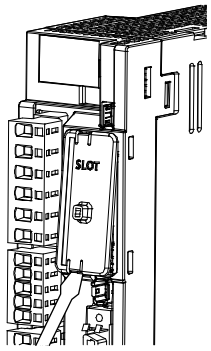

1) Remove the slot cover with a flat-blade screwdriver, etc. Make sure to store the removed cover.

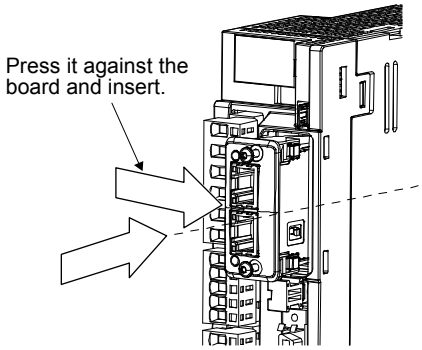

2) Press the network module against the board on the right side so as to align with the guide in the servo amplifier, and insert it along the board.
Forcibly inserting it all the way in obliquely without aligning with the guide may break the board and the network module.

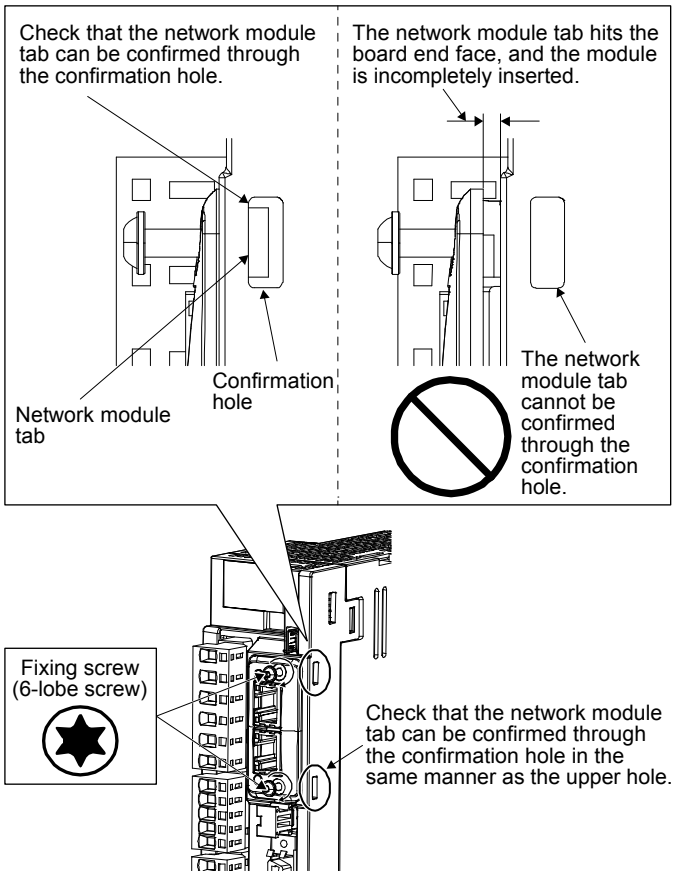

3) Check if the network module tabs can be confirmed through the confirmation hole on the side of the servo amplifier as shown in the diagram.
If the tabs cannot be confirmed, insert the network module while pressing it since the tabs hit the board end face, and the module is incompletely inserted.

4) Tighten the fixing screws using a #8 6-lobe driver.
Tightening torque is 0.25 N•m.

(2) Removal of network module

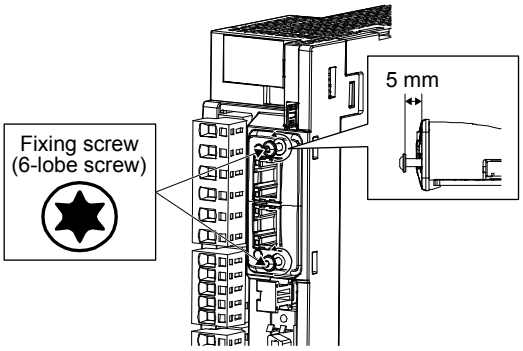

1) Loosen two screws fixing the network module approximately 5 mm using the #8 6-lobe driver.

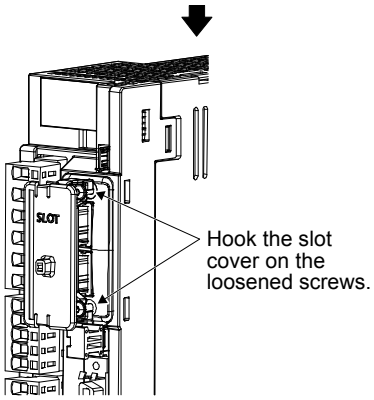

2) Hook the slot cover included at product shipment on the loosened screws as shown in the diagram.

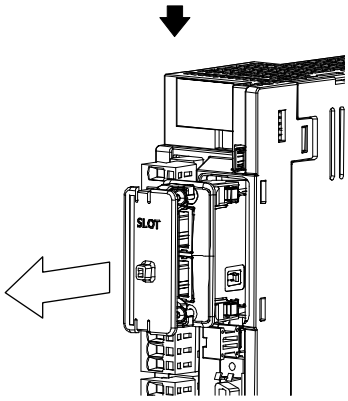

3) Hold the slot cover, and pull it straight toward you to remove the network module.

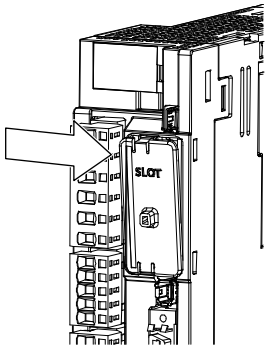

4) Fit the slot cover to prevent dust from entering it.

1.8 Configuration including peripheral equipment

⚠CAUTION
- Connecting a servo motor of the wrong axis to U, V, W, or CN2 of the servo amplifier may cause a malfunction.

POINT
- Equipment other than the servo amplifier and servo motor are optional or recommended products.
- When using the servo amplifier with the DC power supply input, refer to app. 1.

(1) 200 V class

(a) MR-J4-200TM or less

The diagram is for MR-J4-20TM.

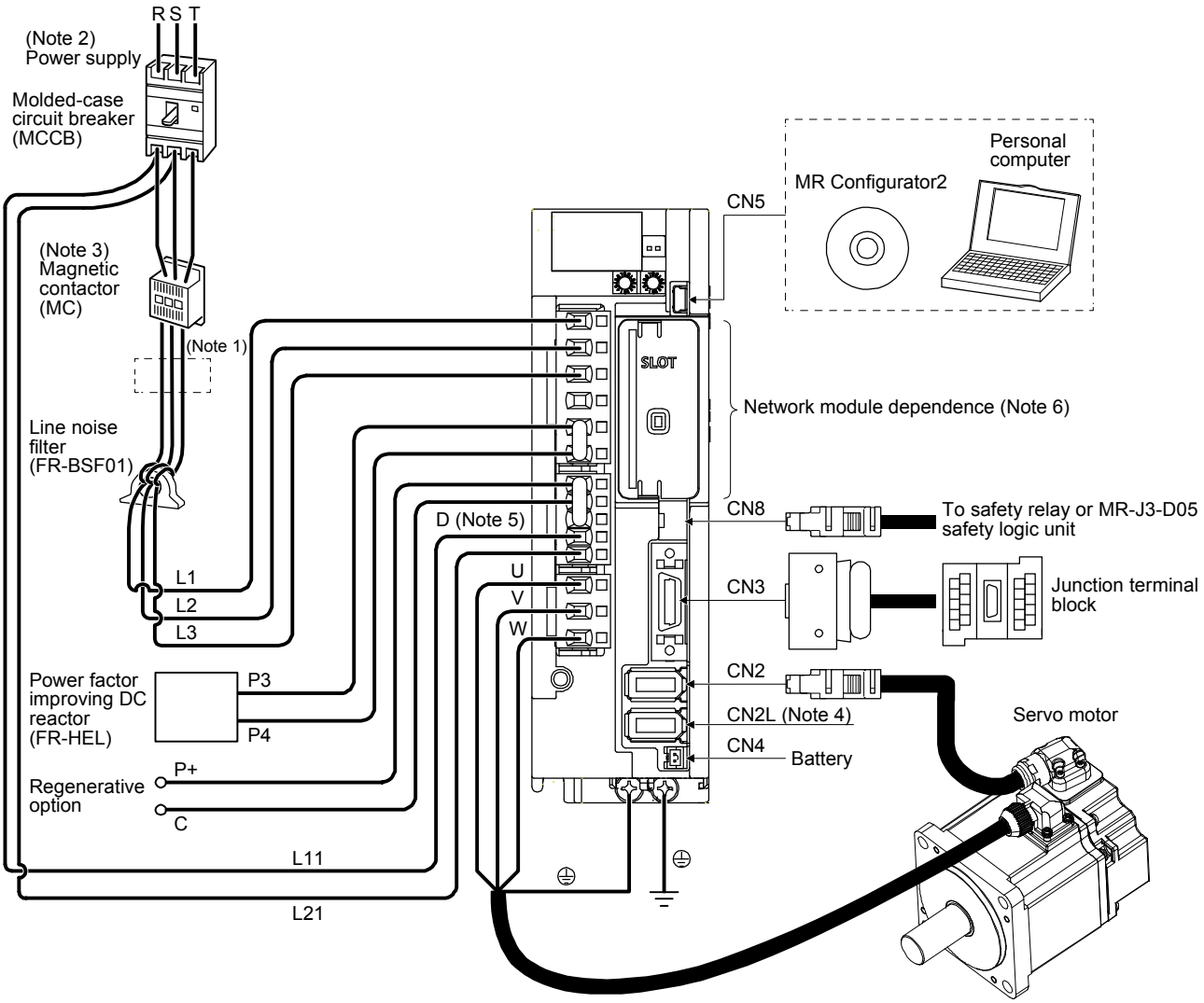

Note 1. The power factor improving AC reactor can also be used. In this case, the power factor improving DC reactor cannot be used. When not using the power factor improving DC reactor, short P3 and P4.

2. For 1-phase 200 V AC to 240 V AC, connect the power supply to L1 and L3. Leave L2 open. Refer to section 1.3 for the power supply specifications.

3. Depending on the main circuit voltage and operation pattern, bus voltage decreases, and that may cause the forced stop deceleration to shift to the dynamic brake deceleration. When dynamic brake deceleration is not required, slow the time to turn off the magnetic contactor.

4. When using servo amplifier in the linear servo system or in the fully closed loop system, connect an external encoder to this connector. Refer to table 1.1 and "Linear Encoder Instruction Manual" for the compatible external encoders.

5. Always connect between P+ and D terminals. When using the regenerative option, refer to section 11.2.

6. For the network module connections, refer to respective communication method manuals of "MR-J4-_TM_ Servo Amplifier Instruction Manual".

(b) MR-J4-350TM

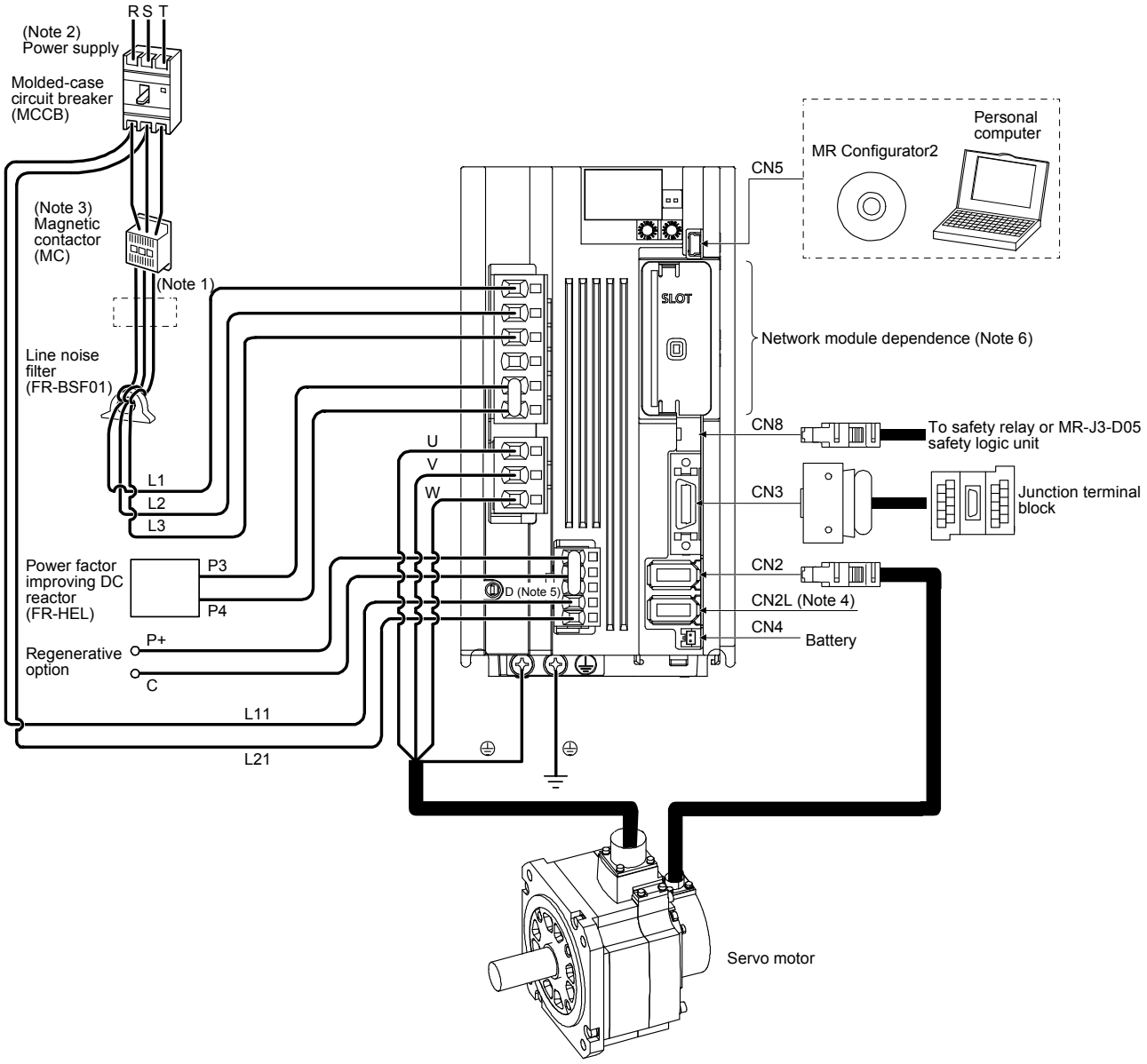

Note 1. The power factor improving AC reactor can also be used. In this case, the power factor improving DC reactor cannot be used. When not using the power factor improving DC reactor, short P3 and P4.

2. Refer to section 1.3 for the power supply specifications.

3. Depending on the main circuit voltage and operation pattern, bus voltage decreases, and that may cause the forced stop deceleration to shift to the dynamic brake deceleration. When dynamic brake deceleration is not required, slow the time to turn off the magnetic contactor.

4. When using servo amplifier in the linear servo system or in the fully closed loop system, connect an external encoder to this connector. Refer to table 1.1 and "Linear Encoder Instruction Manual" for the compatible external encoders.

5. Always connect between P+ and D terminals. When using the regenerative option, refer to section 11.2.

6. For the network module connections, refer to respective communication method manuals of "MR-J4-_TM_ Servo Amplifier Instruction Manual".

(c) MR-J4-500TM

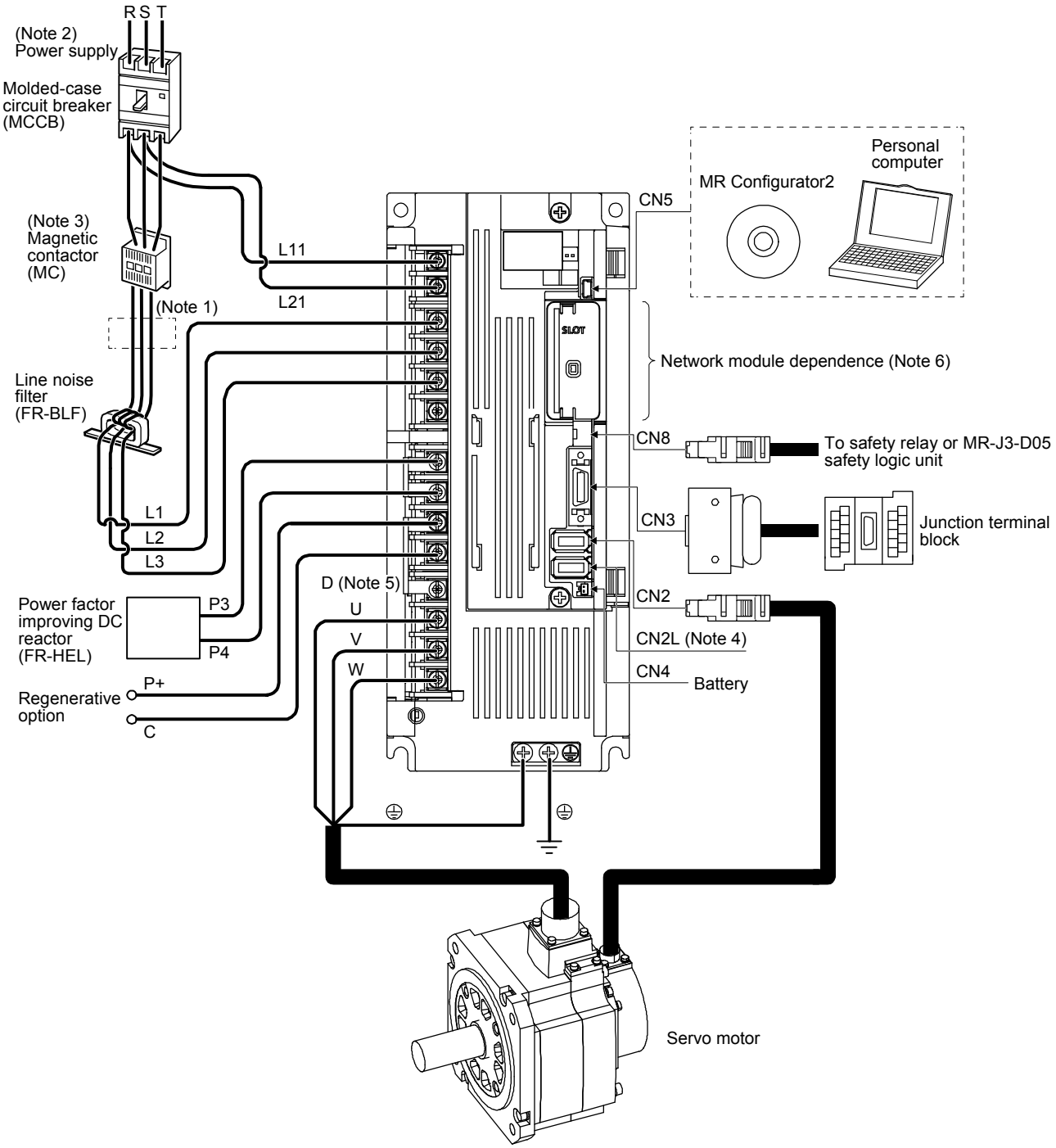

Note 1. The power factor improving AC reactor can also be used. In this case, the power factor improving DC reactor cannot be used. When not using the power factor improving DC reactor, short P3 and P4.

2. Refer to section 1.3 for the power supply specifications.

3. Depending on the main circuit voltage and operation pattern, bus voltage decreases, and that may cause the forced stop deceleration to shift to the dynamic brake deceleration. When dynamic brake deceleration is not required, slow the time to turn off the magnetic contactor.

4. When using servo amplifier in the linear servo system or in the fully closed loop system, connect an external encoder to this connector. Refer to table 1.1 and "Linear Encoder Instruction Manual" for the compatible external encoders.

5. Always connect between P+ and D terminals. When using the regenerative option, refer to section 11.2.

6. For the network module connections, refer to respective communication method manuals of "MR-J4-_TM_ Servo Amplifier Instruction Manual".

(d) MR-J4-700TM

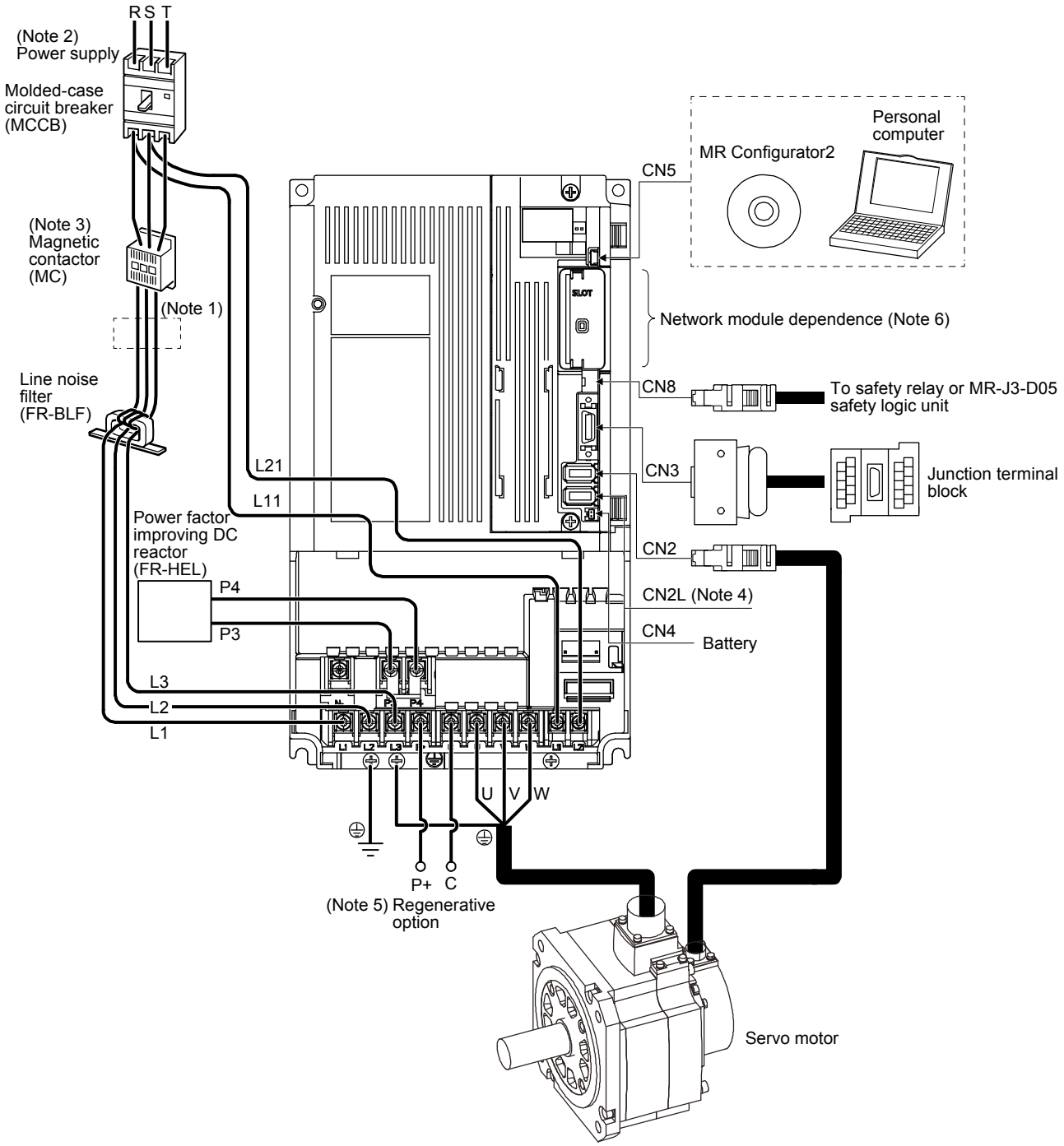

Note 1. The power factor improving AC reactor can also be used. In this case, the power factor improving DC reactor cannot be used. When not using the power factor improving DC reactor, short P3 and P4.

2. Refer to section 1.3 for the power supply specifications.

3. Depending on the main circuit voltage and operation pattern, bus voltage decreases, and that may cause the forced stop deceleration to shift to the dynamic brake deceleration. When dynamic brake deceleration is not required, slow the time to turn off the magnetic contactor.

4. When using servo amplifier in the linear servo system or in the fully closed loop system, connect an external encoder to this connector. Refer to table 1.1 and "Linear Encoder Instruction Manual" for the compatible external encoders.

5. When using the regenerative option, refer to section 11.2.

6. For the network module connections, refer to respective communication method manuals of "MR-J4-_TM_ Servo Amplifier Instruction Manual".

(e) MR-J4-11KTM/MR-J4-15KTM

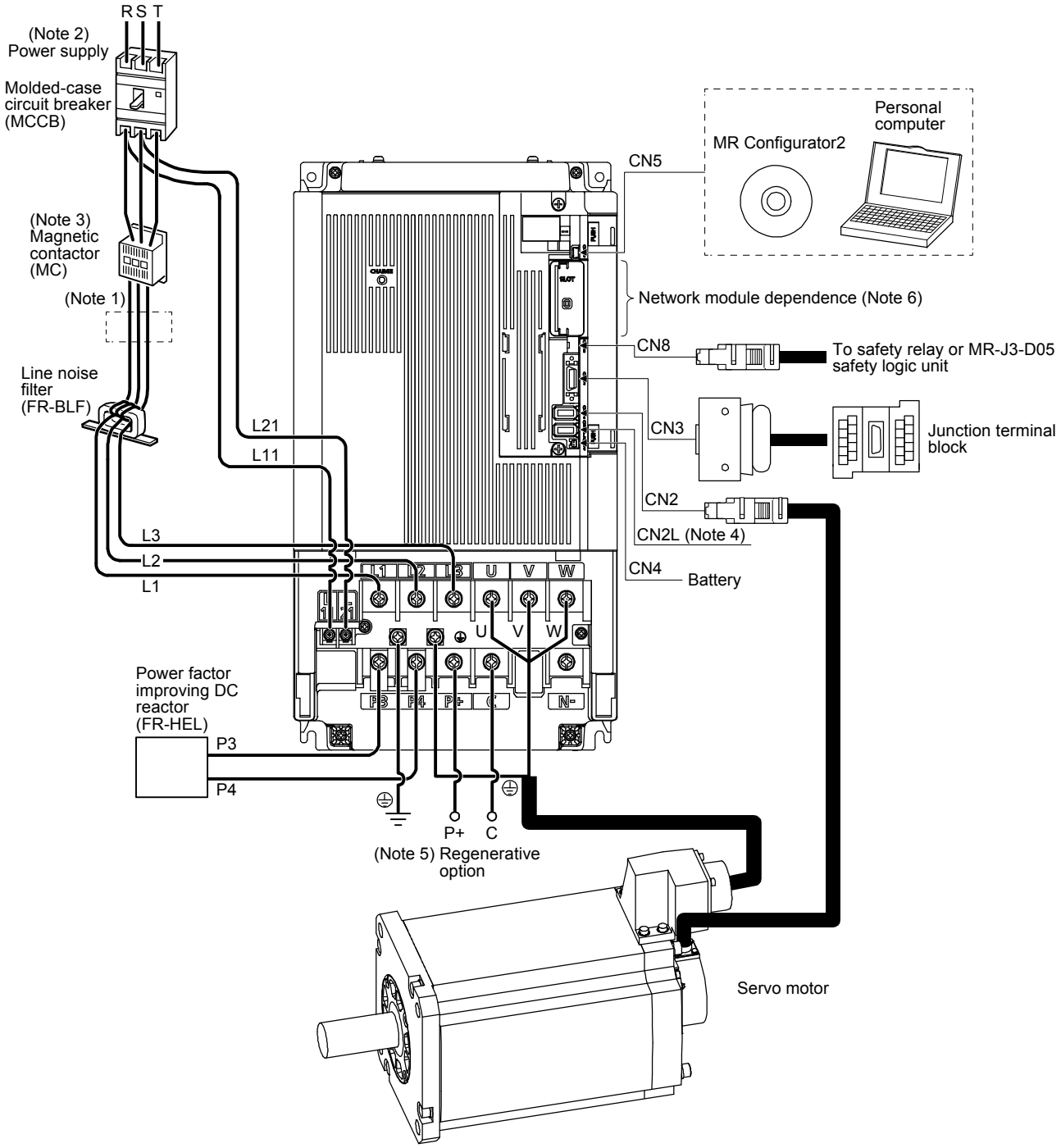

Note 1. The power factor improving AC reactor can also be used. In this case, the power factor improving DC reactor cannot be used. When not using the power factor improving DC reactor, short P3 and P4.

2. Refer to section 1.3 for the power supply specifications.

3. Depending on the main circuit voltage and operation pattern, bus voltage decreases, and that may cause the forced stop deceleration to shift to the dynamic brake deceleration. When dynamic brake deceleration is not required, slow the time to turn off the magnetic contactor.

4. When using servo amplifier in the linear servo system or in the fully closed loop system, connect an external encoder to this connector. Refer to table 1.1 and "Linear Encoder Instruction Manual" for the compatible external encoders.

5. When using the regenerative option, refer to section 11.2.

6. For the network module connections, refer to respective communication method manuals of "MR-J4-_TM_ Servo Amplifier Instruction Manual".

(f) MR-J4-22KTM

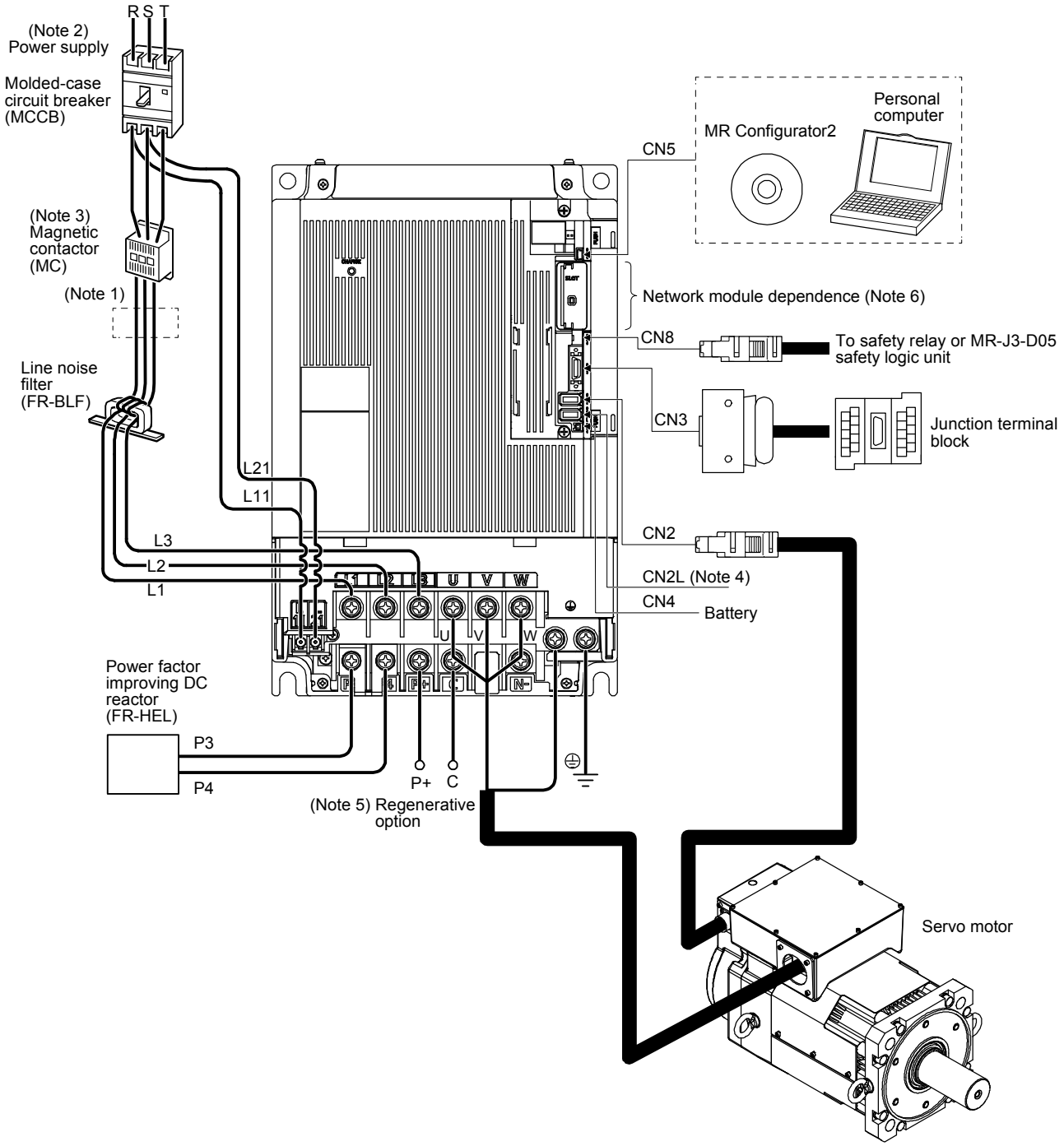

Note 1. The power factor improving AC reactor can also be used. In this case, the power factor improving DC reactor cannot be used. When not using the power factor improving DC reactor, short P3 and P4.

2. Refer to section 1.3 for the power supply specifications.

3. Depending on the main circuit voltage and operation pattern, bus voltage decreases, and that may cause the forced stop deceleration to shift to the dynamic brake deceleration. When dynamic brake deceleration is not required, slow the time to turn off the magnetic contactor.

4. When using servo amplifier in the linear servo system or in the fully closed loop system, connect an external encoder to this connector. Refer to table 1.1 and "Linear Encoder Instruction Manual" for the compatible external encoders.

5. When using the regenerative option, refer to section 11.2.

6. For the network module connections, refer to respective communication method manuals of "MR-J4-_TM_ Servo Amplifier Instruction Manual".

(2) 400 V class

(a) MR-J4-200TM4 or less

The diagram is for MR-J4-60TM4 and MR-J4-100TM4.

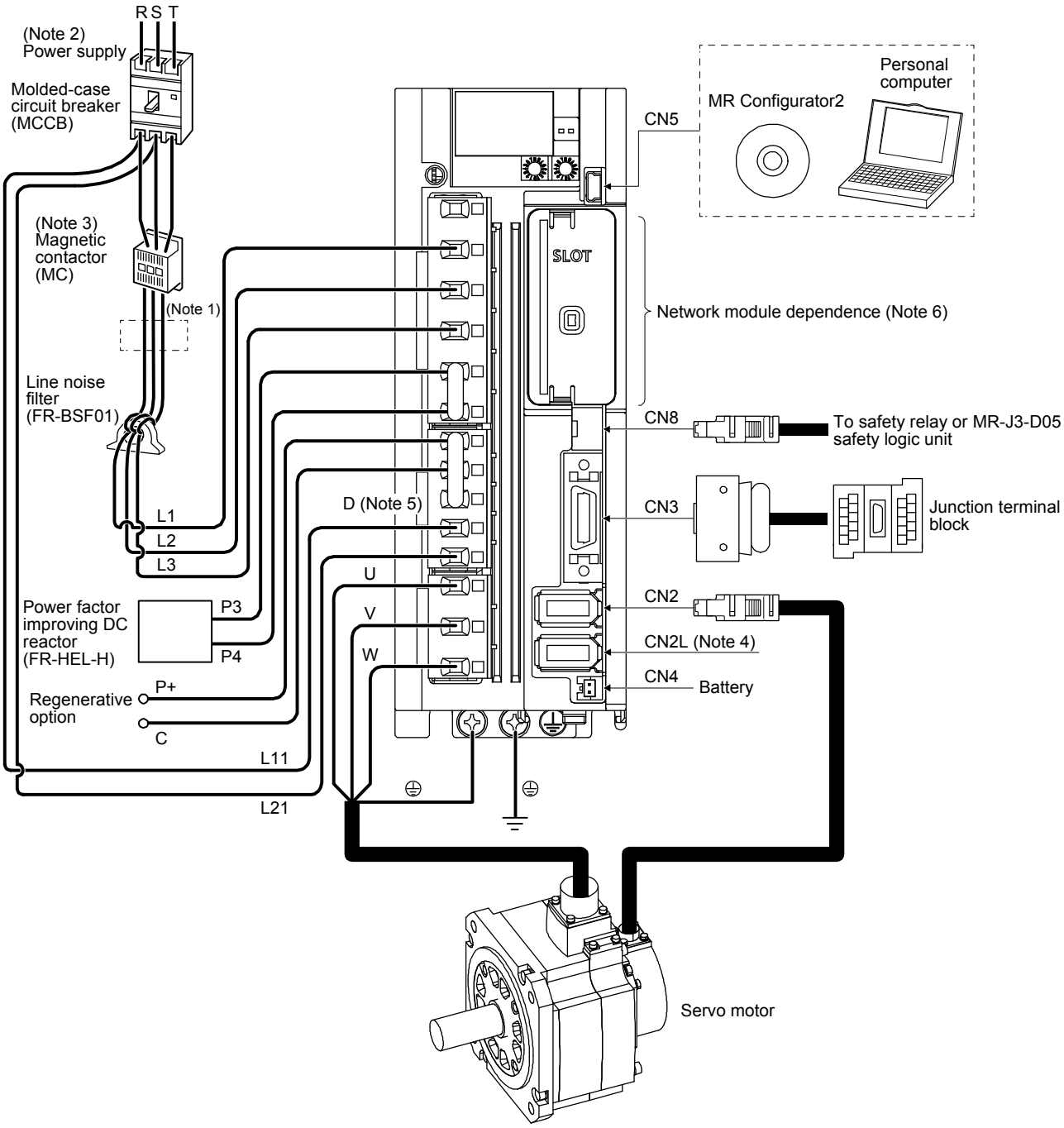

Note 1. The power factor improving AC reactor can also be used. In this case, the power factor improving DC reactor cannot be used. When not using the power factor improving DC reactor, short P3 and P4.

2. Refer to section 1.3 for the power supply specification.

3. Depending on the main circuit voltage and operation pattern, bus voltage decreases, and that may cause the forced stop deceleration to shift to the dynamic brake deceleration. When dynamic brake deceleration is not required, slow the time to turn off the magnetic contactor.

4. When using servo amplifier in the linear servo system or in the fully closed loop system, connect an external encoder to this connector. Refer to Table 1.1 and "Linear Encoder Instruction Manual" for the compatible external encoders.

5. Always connect between P+ and D terminals. When using the regenerative option, refer to section 11.2.

6. For the network module connections, refer to respective communication method manuals of "MR-J4-_TM_ Servo Amplifier Instruction Manual".

(b) MR-J4-350TM4

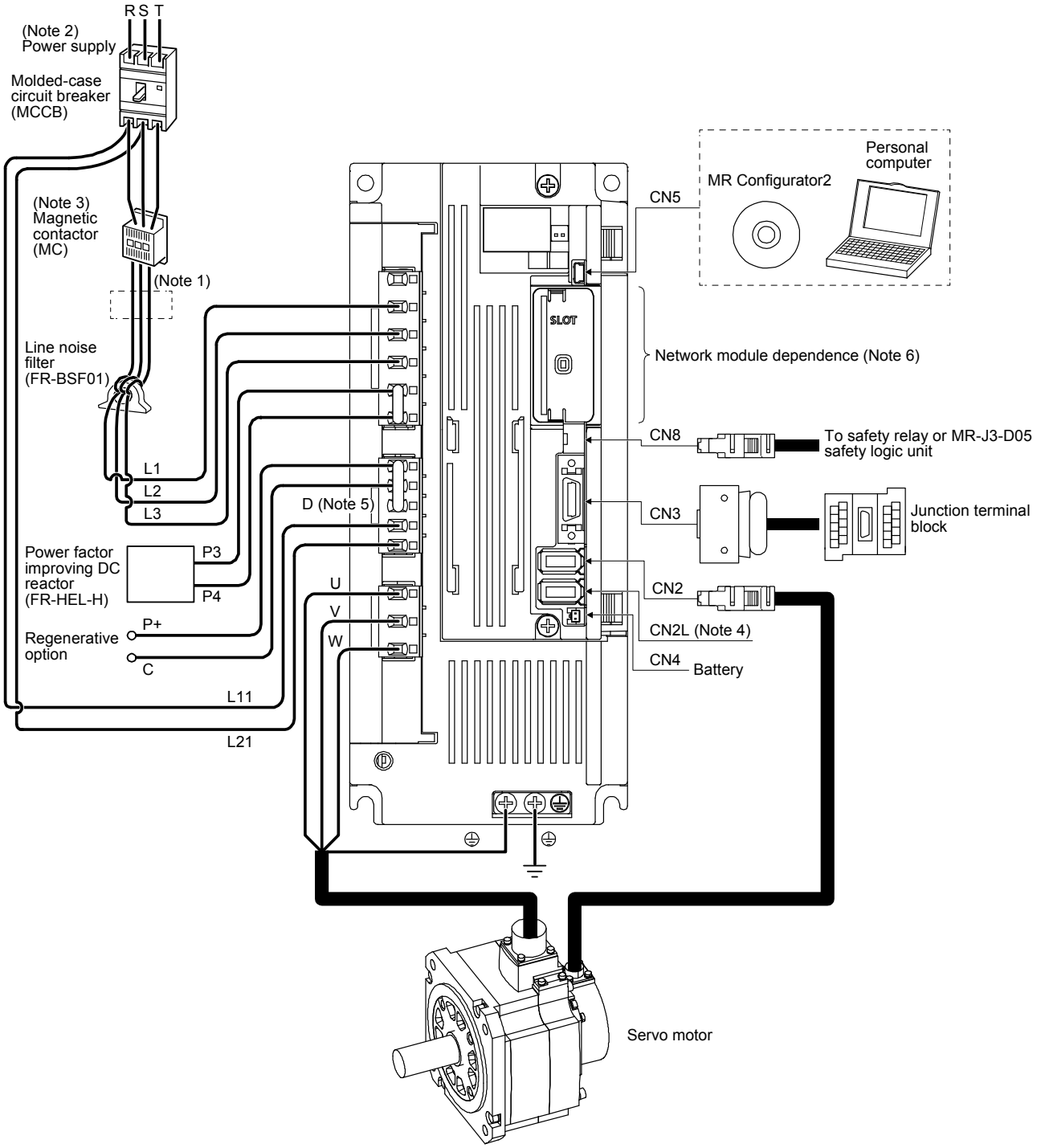

Note 1. The power factor improving AC reactor can also be used. In this case, the power factor improving DC reactor cannot be used. When not using the power factor improving DC reactor, short P3 and P4.
2. Refer to section 1.3 for the power supply specification.
3. Depending on the main circuit voltage and operation pattern, bus voltage decreases, and that may cause the forced stop deceleration to shift to the dynamic brake deceleration. When dynamic brake deceleration is not required, slow the time to turn off the magnetic contactor.
4. When using servo amplifier in the linear servo system or in the fully closed loop system, connect an external encoder to this connector. Refer to Table 1.1 and "Linear Encoder Instruction Manual" for the compatible external encoders.
5. Always connect between P+ and D terminals. When using the regenerative option, refer to section 11.2.
6. For the network module connections, refer to respective communication method manuals of "MR-J4-_TM_ Servo Amplifier Instruction Manual".

(c) MR-J4-500TM4

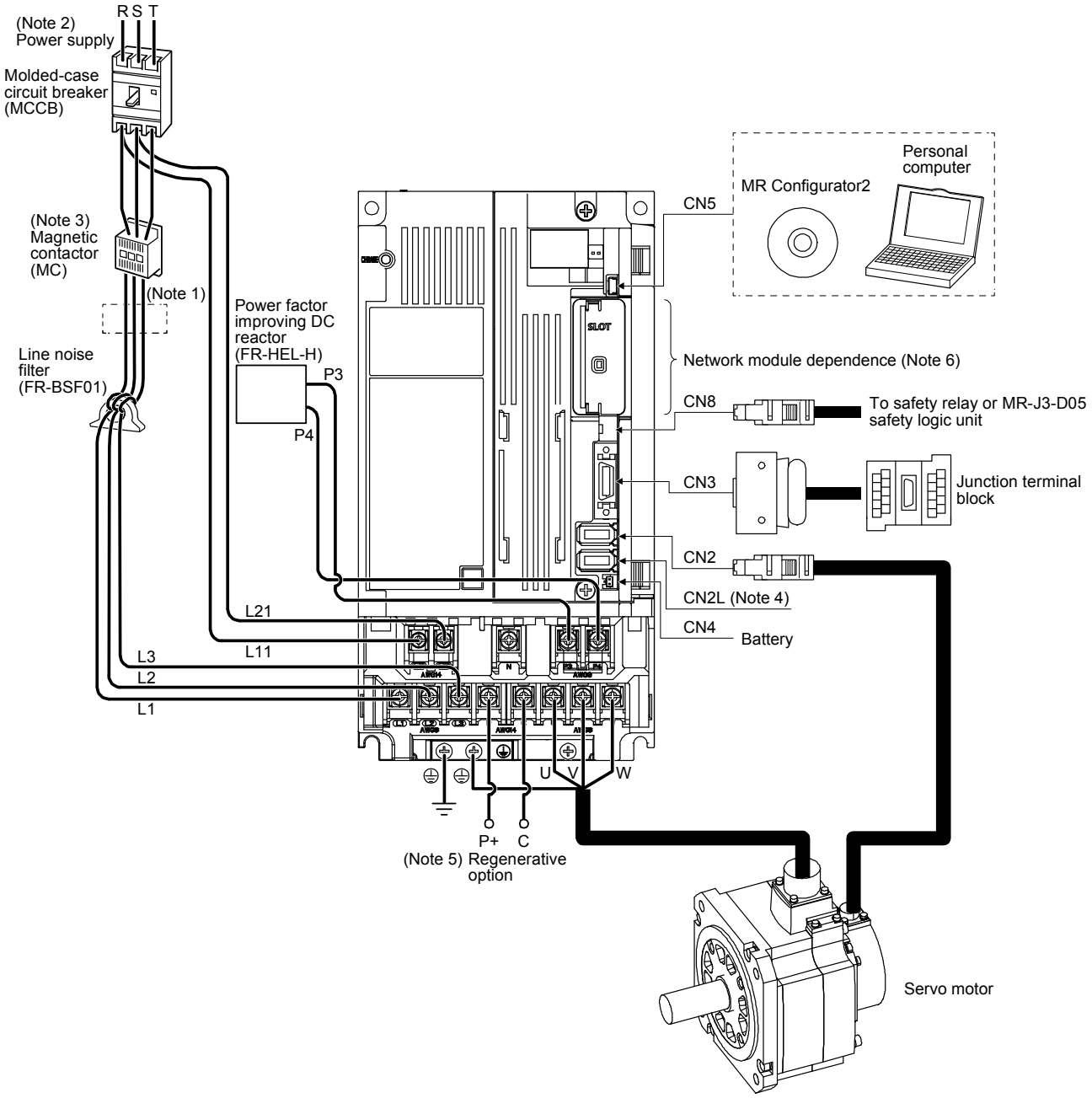

Note 1. The power factor improving AC reactor can also be used. In this case, the power factor improving DC reactor cannot be used. When not using the power factor improving DC reactor, short P3 and P4.

2. Refer to section 1.3 for the power supply specification.

3. Depending on the main circuit voltage and operation pattern, bus voltage decreases, and that may cause the forced stop deceleration to shift to the dynamic brake deceleration. When dynamic brake deceleration is not required, slow the time to turn off the magnetic contactor.

4. When using servo amplifier in the linear servo system or in the fully closed loop system, connect an external encoder to this connector. Refer to Table 1.1 and "Linear Encoder Instruction Manual" for the compatible external encoders.

5. When using the regenerative option, refer to section 11.2.

6. For the network module connections, refer to respective communication method manuals of "MR-J4-_TM_ Servo Amplifier Instruction Manual".

(d) MR-J4-700TM4

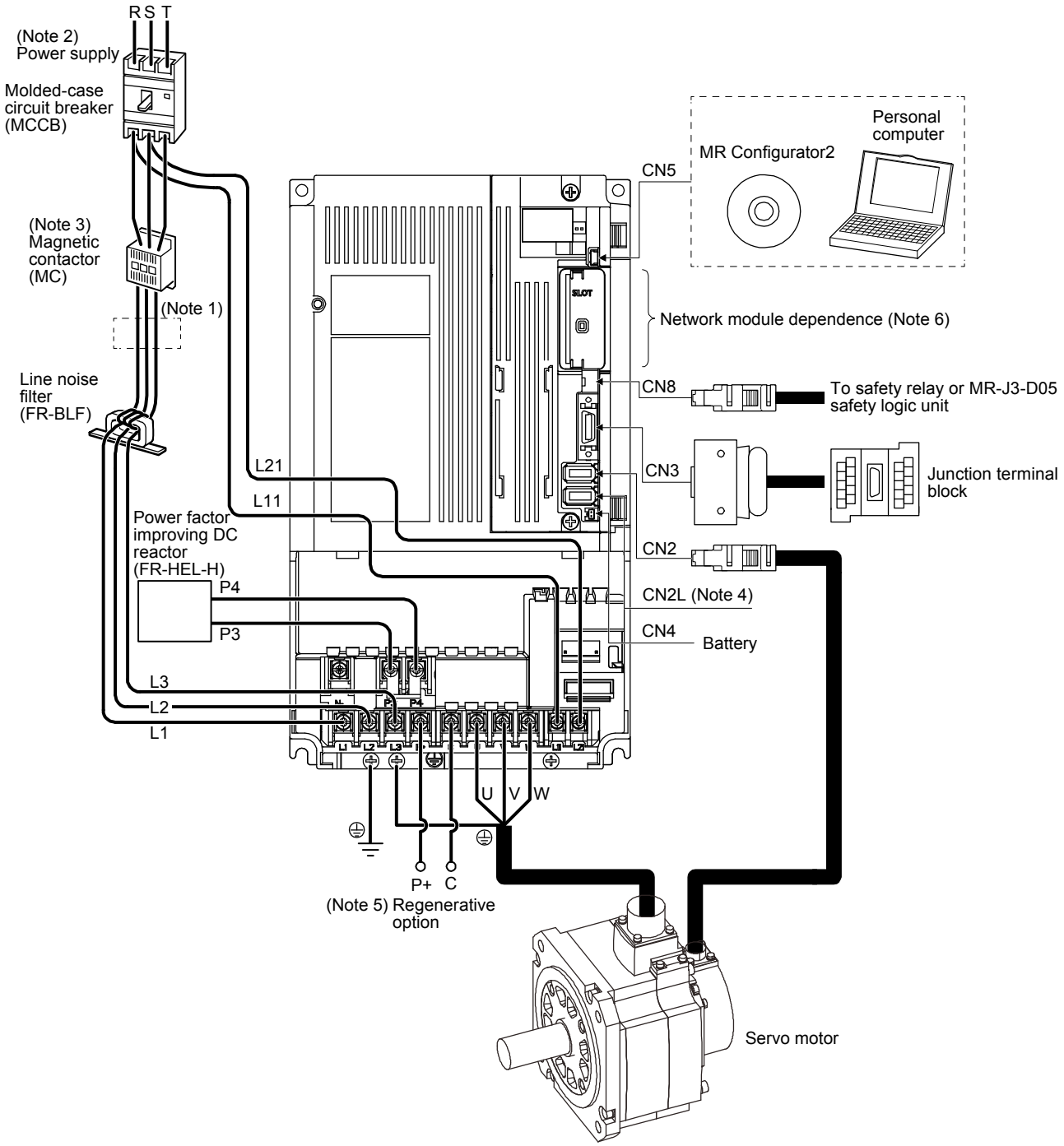

Note 1. The power factor improving AC reactor can also be used. In this case, the power factor improving DC reactor cannot be used. When not using the power factor improving DC reactor, short P3 and P4.

2. Refer to section 1.3 for the power supply specification.

3. Depending on the main circuit voltage and operation pattern, bus voltage decreases, and that may cause the forced stop deceleration to shift to the dynamic brake deceleration. When dynamic brake deceleration is not required, slow the time to turn off the magnetic contactor.

4. When using servo amplifier in the linear servo system or in the fully closed loop system, connect an external encoder to this connector. Refer to Table 1.1 and "Linear Encoder Instruction Manual" for the compatible external encoders.

5. When using the regenerative option, refer to section 11.2.

6. For the network module connections, refer to respective communication method manuals of "MR-J4-_TM_ Servo Amplifier Instruction Manual".

(e) MR-J4-11KTM4/MR-J4-15KTM4

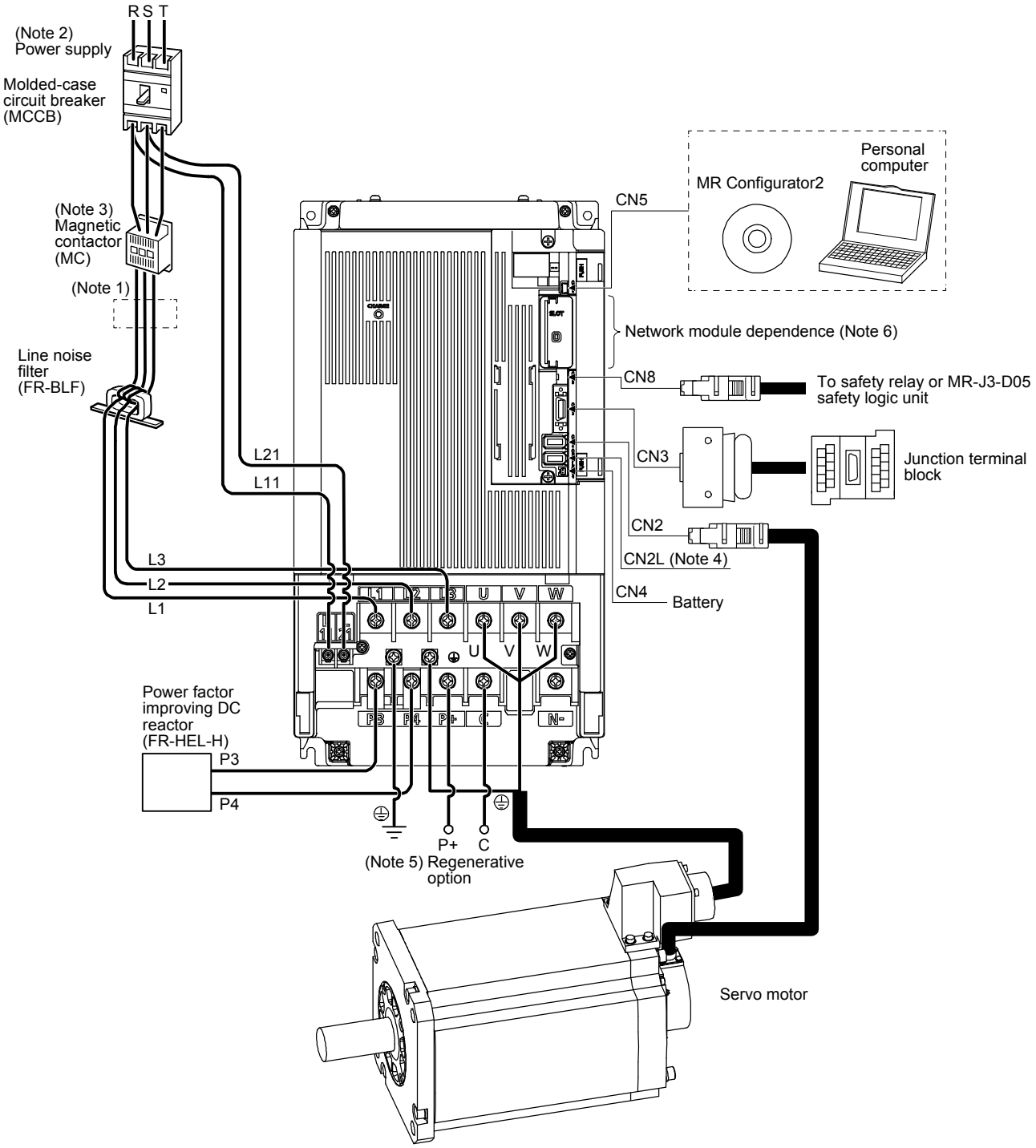

Note 1. The power factor improving AC reactor can also be used. In this case, the power factor improving DC reactor cannot be used. When not using the power factor improving DC reactor, short P3 and P4.
2. Refer to section 1.3 for the power supply specification.
3. Depending on the main circuit voltage and operation pattern, bus voltage decreases, and that may cause the forced stop deceleration to shift to the dynamic brake deceleration. When dynamic brake deceleration is not required, slow the time to turn off the magnetic contactor.
4. When using servo amplifier in the linear servo system or in the fully closed loop system, connect an external encoder to this connector. Refer to Table 1.1 and "Linear Encoder Instruction Manual" for the compatible external encoders.
5. When using the regenerative option, refer to section 11.2.
6. For the network module connections, refer to respective communication method manuals of "MR-J4-_TM_ Servo Amplifier Instruction Manual".

(f) MR-J4-22KTM4

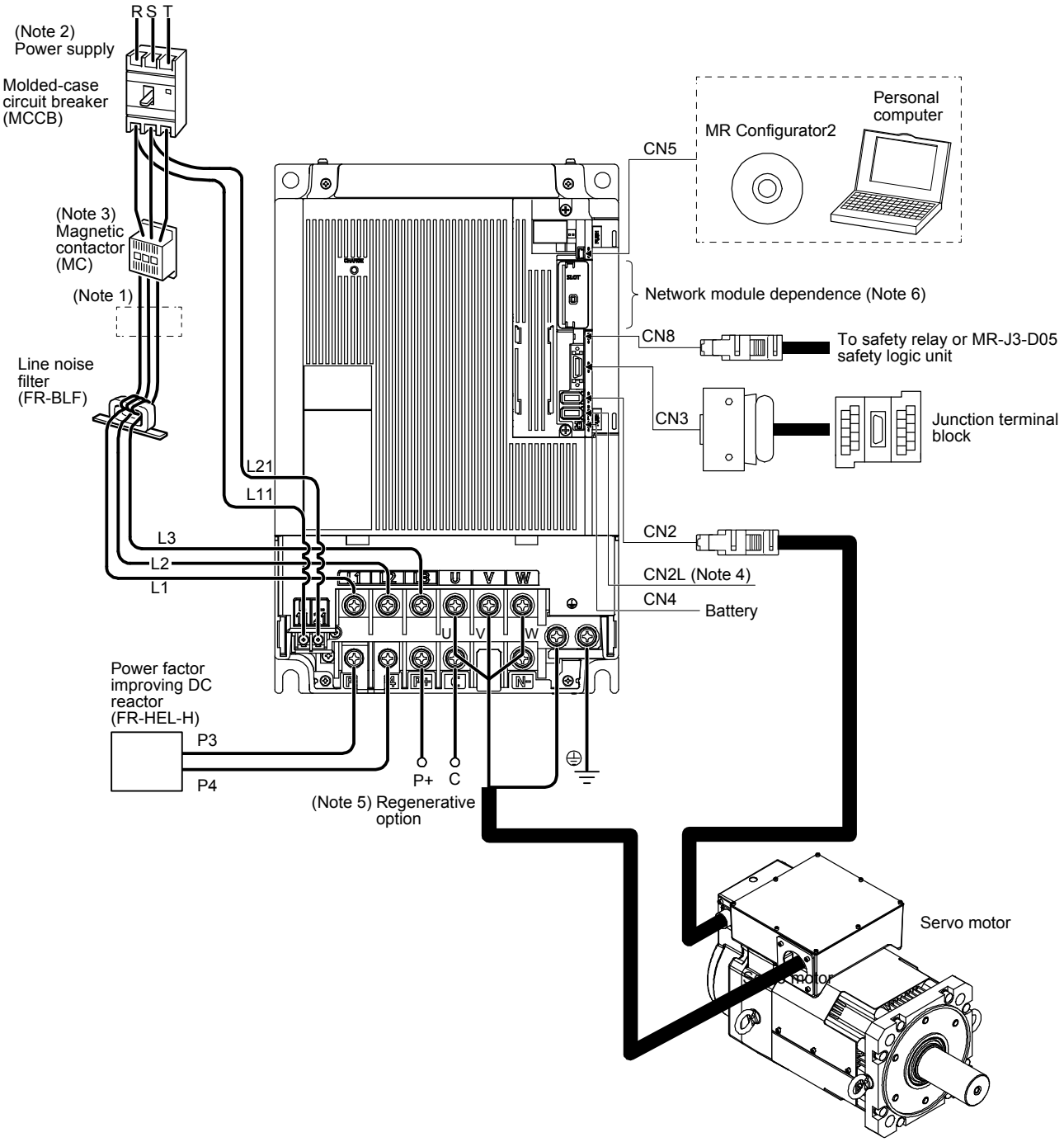

Note 1. The power factor improving AC reactor can also be used. In this case, the power factor improving DC reactor cannot be used. When not using the power factor improving DC reactor, short P3 and P4.

2. Refer to section 1.3 for the power supply specification.

3. Depending on the main circuit voltage and operation pattern, bus voltage decreases, and that may cause the forced stop deceleration to shift to the dynamic brake deceleration. When dynamic brake deceleration is not required, slow the time to turn off the magnetic contactor.

4. When using servo amplifier in the linear servo system or in the fully closed loop system, connect an external encoder to this connector. Refer to Table 1.1 and "Linear Encoder Instruction Manual" for the compatible external encoders.

5. When using the regenerative option, refer to section 11.2.

6. For the network module connections, refer to respective communication method manuals of "MR-J4-_TM_ Servo Amplifier Instruction Manual".

(3) 100 V class

The diagram is for MR-J4-20TM1.

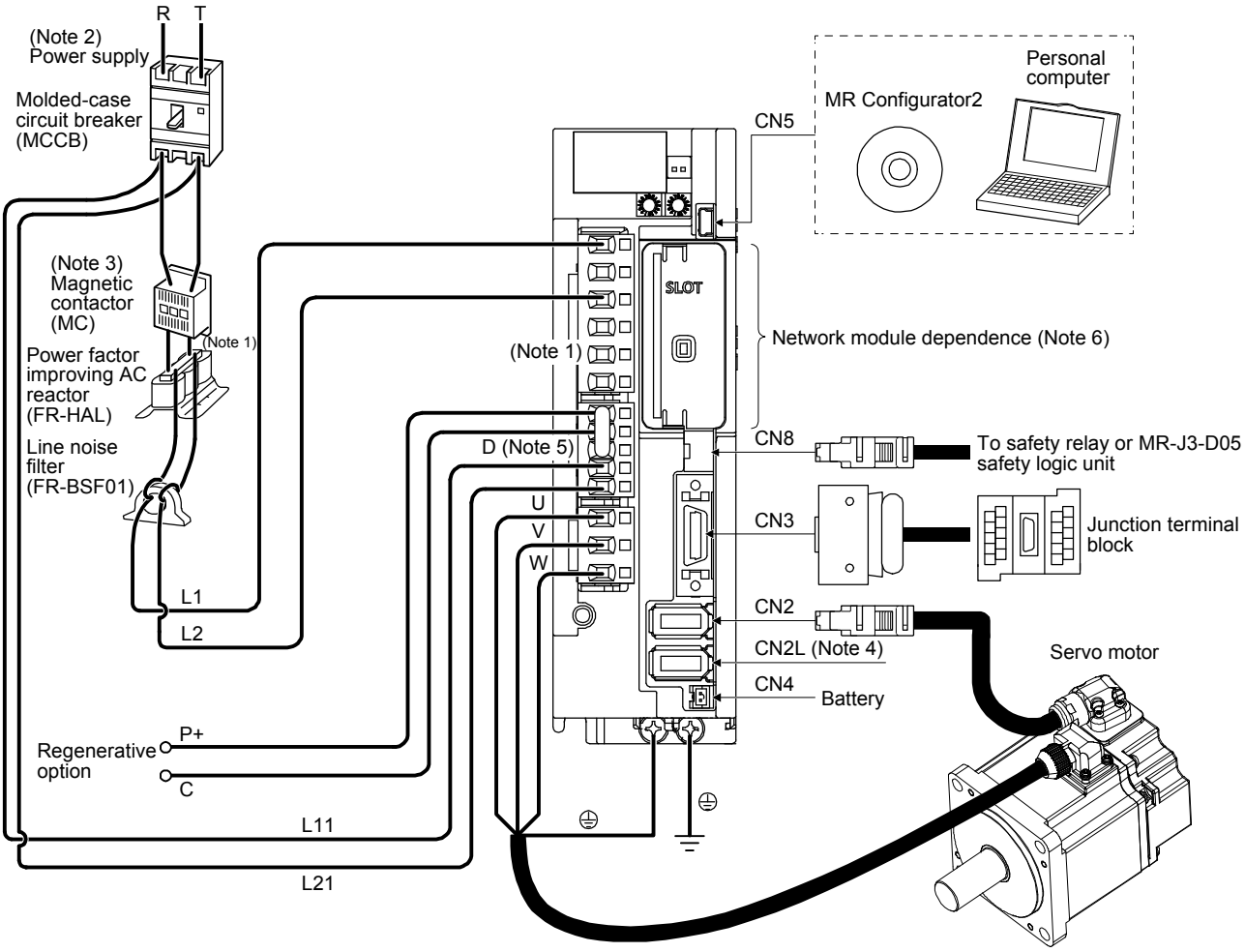

Note 1. The power factor improving DC reactor cannot be used.

2. For power supply specifications, refer to section 1.3.

3. Depending on the main circuit voltage and operation pattern, bus voltage decreases, and that may cause the forced stop deceleration to shift to the dynamic brake deceleration. When dynamic brake deceleration is not required, slow the time to turn off the magnetic contactor.

4. When using servo amplifier in the fully closed loop system, connect an external encoder to this connector. Refer to Table 1.1 and Linear Encoder Instruction Manual for the compatible external encoders.

5. Always connect between P+ and D terminals. When using the regenerative option, refer to section 11.2.

6. For the network module connections, refer to respective communication method manuals of "MR-J4-_TM_ Servo Amplifier Instruction Manual".

2. INSTALLATION

⚠WARNING	●To prevent electric shock, ground each equipment securely.

⚠CAUTION	●Stacking in excess of the specified number of product packages is not allowed. ●Do not hold the front cover, cables, or connectors when carrying the servo amplifier. Otherwise, it may drop. ●Install the equipment on incombustible material. Installing them directly or close to combustibles will lead to smoke or a fire. ●Install the servo amplifier and the servo motor in a load-bearing place in accordance with the Instruction Manual. ●Do not get on or put heavy load on the equipment. Otherwise, it may cause injury. ●Use the equipment within the specified environment. For the environment, refer to section 1.3. ●Provide an adequate protection to prevent screws and other conductive matter, oil and other combustible matter from entering the servo amplifier. ●Do not block the intake and exhaust areas of the servo amplifier. Otherwise, it may cause a malfunction. ●Do not drop or apply heavy impact on the servo amplifiers and the servo motors. Otherwise, it may cause injury, malfunction, etc. ●Do not install or operate the servo amplifier which have been damaged or have any parts missing. ●When the equipment has been stored for an extended period of time, contact your local sales office. ●When handling the servo amplifier, be careful about the edged parts such as corners of the servo amplifier. ●The servo amplifier must be installed in the metal cabinet. ●When fumigants that contain halogen materials such as fluorine, chlorine, bromine, and iodine are used for disinfecting and protecting wooden packaging from insects, they cause malfunction when entering our products. Please take necessary precautions to ensure that remaining materials from fumigant do not enter our products, or treat packaging with methods other than fumigation (heat method).Additionally, disinfect and protect wood from insects before packing products.

2.1 Installation direction and clearances

⚠CAUTION	●The equipment must be installed in the specified direction. Otherwise, it may cause a malfunction. ●Leave specified clearances between the servo amplifier and the cabinet walls or other equipment. Otherwise, it may cause a malfunction.

(1) Installation clearances of the servo amplifier

(a) Installation of one servo amplifier

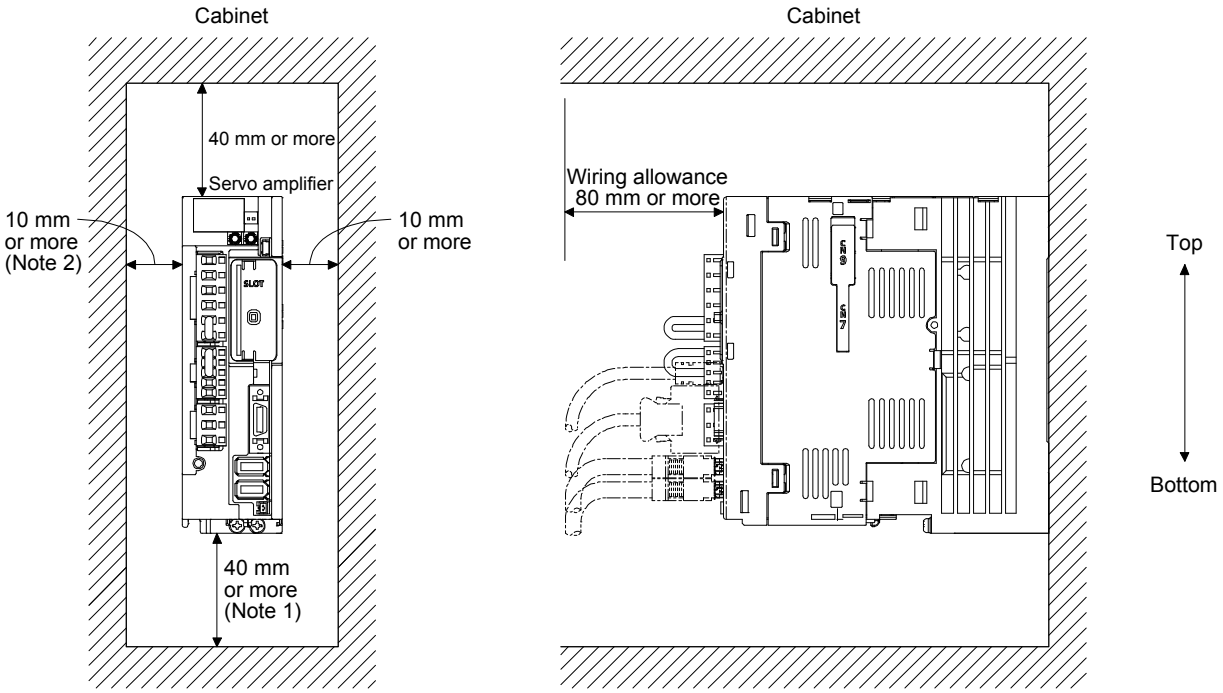

Note 1. For 11 kW to 22 kW servo amplifiers, the clearance between the bottom and ground will be 120 mm or more.

2. When mounting MR-J4-500TM, maintain a minimum clearance of 25 mm on the left side.

(b) Installation of two or more servo amplifiers

POINT
●Close mounting is possible depending on the capacity of the servo amplifier. Refer to section 1.3 for availability of close mounting. ●When closely mounting multiple servo amplifiers, the servo amplifier on the right must have a larger depth than that on the left. Otherwise, the CNP1, CNP2, and CNP3 connectors cannot be removed.

Leave a large clearance between the top of the servo amplifier and the cabinet walls, and install a cooling fan to prevent the internal temperature of the cabinet from exceeding the environment.
When mounting the servo amplifiers closely, leave a clearance of 1 mm between the adjacent servo amplifiers in consideration of mounting tolerances. In this case, keep the ambient temperature within 0 °C to 45 °C or use the servo amplifier with 75% or less of the effective load ratio.

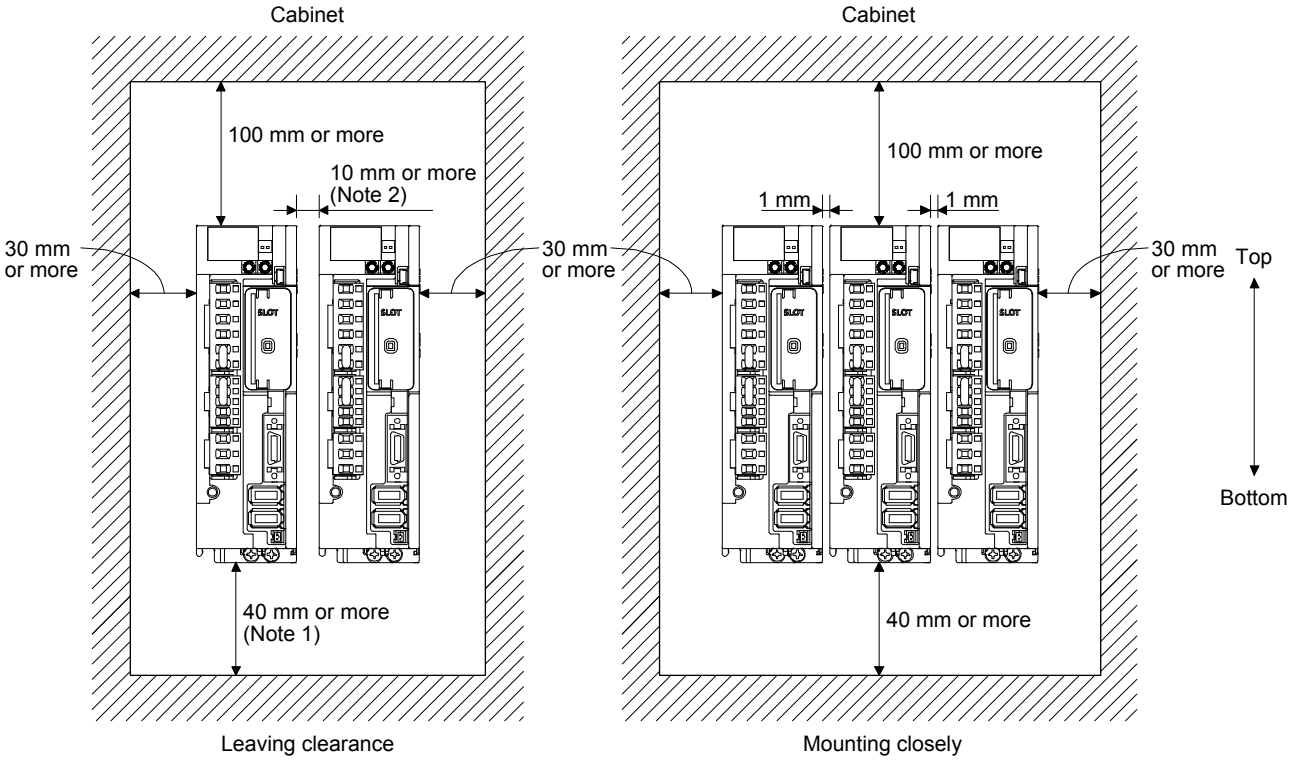

Note 1. For 11 kW to 22 kW servo amplifiers, the clearance between the bottom and ground will be 120 mm or more.
2. When mounting MR-J4-500TM, maintain a minimum clearance of 25 mm between the MR-J4-500TM and a servo amplifier mounted on the left side.

(2) Others

When using heat generating equipment such as the regenerative option, install them with full consideration of heat generation so that the servo amplifier is not affected.
Install the servo amplifier on a perpendicular wall in the correct vertical direction.

2.2 Keeping out of foreign materials

(1) When drilling in the cabinet, prevent drill chips and wire fragments from entering the servo amplifier.

(2) Prevent oil, water, metallic dust, etc. from entering the servo amplifier through openings in the cabinet or a cooling fan installed on the ceiling.

(3) When installing the cabinet in a place where toxic gas, dirt and dust exist, conduct an air purge (force clean air into the cabinet from outside to make the internal pressure higher than the external pressure) to prevent such materials from entering the cabinet.

2.3 Encoder cable stress

(1) The way of clamping the cable must be fully examined so that bending stress and cable's own weight stress are not applied to the cable connection.

(2) For use in any application where the servo motor moves, fix the cables (encoder, power supply, and brake) with having some slack from the connector connection part of the servo motor to avoid putting stress on the connector connection part. Use the optional encoder cable within the bending life range. Use the power supply and brake wiring cables within the bending life of the cables.

(3) Avoid any probability that the cable insulator might be cut by sharp chips, rubbed by a machine corner or stamped by workers or vehicles.

(4) For installation on a machine where the servo motor moves, the bending radius should be made as large as possible. Refer to section 10.4 for the bending life.

2.4 Inspection items

⚠WARNING	●Before starting maintenance and/or inspection, turn off the power and wait for 15 minutes or more until the charge lamp turns off. Then, confirm that the voltage between P+ and N- is safe with a voltage tester and others. Otherwise, an electric shock may occur. In addition, when confirming whether the charge lamp is off or not, always confirm it from the front of the servo amplifier. ●To avoid an electric shock, only qualified personnel should attempt inspections. For repair and parts replacement, contact your local sales office.

⚠CAUTION	●Do not perform insulation resistance test on the servo amplifier. Otherwise, it may cause a malfunction. ●Do not disassemble and/or repair the equipment on customer side.

It is recommended that the following points periodically be checked.

(1) Check for loose terminal block screws. Retighten any loose screws.

(2) Check the cables and the like for scratches or cracks. Inspect them periodically according to operating conditions especially when the servo motor is movable.

(3) Check that the connector is securely connected to the servo amplifier.

(4) Check that the wires are not coming out from the connector.

(5) Check for dust accumulation on the servo amplifier.

(6) Check for unusual noise generated from the servo amplifier.

(7) Make sure that the emergency stop circuit operates properly such that an operation can be stopped immediately and a power is shut off by the emergency stop switch.

2.5 Parts having service life

Service life of the following parts is listed below. However, the service life varies depending on operation and environment. If any fault is found in the parts, they must be replaced immediately regardless of their service life. For parts replacement, please contact your local sales office.

Part name	Life guideline
Smoothing capacitor	10 years
Relay	Number of power-on, forced stop by EM1 (Forced stop 1), and sudden stop command from controller: 100,000 times Number of on and off for STO: 1,000,000 times
Cooling fan	10,000 hours to 30,000 hours (2 years to 3 years)
Absolute position battery	Refer to section 12.2.

(1) Smoothing capacitor
The characteristic of smoothing capacitor is deteriorated due to ripple currents, etc. The life of the capacitor greatly depends on ambient temperature and operating conditions. The capacitor will reach the end of its life in 10 years of continuous operation in air-conditioned environment (ambient temperature of 40 °C or less).

(2) Relays
Contact faults will occur due to contact wear arisen from switching currents. Relays reach the end of their lives when the power has been turned on, forced stop by EM1 (Forced stop 1) has occurred, and sudden stop command from controller has been executed 100,000 times in total, or when the STO has been turned on and off 1,000,000 times while the servo motor is stopped under servo-off state. However, the lives of relays may depend on the power supply capacity.

(3) Servo amplifier cooling fan
The cooling fan bearings reach the end of their life in 10,000 hours to 30,000 hours. Normally, therefore, the cooling fan must be replaced in a few years of continuous operation as a guideline. If unusual noise or vibration is found during inspection, the cooling fan must also be replaced.
The life indicates under the yearly average ambient temperature of 40 °C, free from corrosive gas, flammable gas, oil mist, dust and dirt.

2.6 Restrictions when using this product at altitude exceeding 1000 m and up to 2000 m above sea level

(1) Effective load ratio and regenerative load ratio

As heat dissipation effects decrease in proportion to the decrease in air density, use the product within the effective load ratio and regenerative load ratio shown in the following figure.

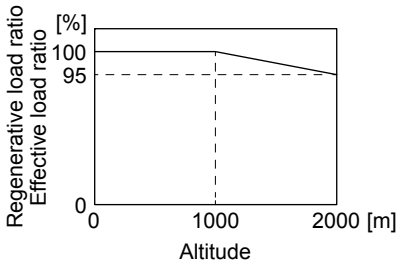

When closely mounting the servo amplifiers, operate them at the ambient temperature of 0 °C to 45 °C or at 75% or smaller effective load ratio. (Refer to section 2.1.)

(2) Input voltage

Generally, a withstand voltage decreases as the altitude increases; however, there is no restriction on the withstand voltage. Use in the same manner as in 1000 m or less. (Refer to section 1.3.)

(3) Parts having service life

(a) Smoothing capacitor

The capacitor will reach the end of its life in 10 years of continuous operation in air-conditioned environment (ambient temperature of 30 °C or less).

(b) Relay

There is no restriction. Use in the same manner as in 1000 m or less. (Refer to section 2.5.)

(c) Servo amplifier cooling fan

There is no restriction. Use in the same manner as in 1000 m or less. (Refer to section 2.5.)

3. SIGNALS AND WIRING

⚠WARNING

- Any person who is involved in wiring should be fully competent to do the work.
- Before wiring, turn off the power and wait for 15 minutes or more until the charge lamp turns off. Then, confirm that the voltage between P+ and N- is safe with a voltage tester and others. Otherwise, an electric shock may occur. In addition, when confirming whether the charge lamp is off or not, always confirm it from the front of the servo amplifier.
- Ground the servo amplifier and servo motor securely.
- Do not attempt to wire the servo amplifier and servo motor until they have been installed. Otherwise, it may cause an electric shock.
- The cables should not be damaged, stressed, loaded, or pinched. Otherwise, it may cause an electric shock.
- To avoid an electric shock, insulate the connections of the power supply terminals.

⚠CAUTION

- Wire the equipment correctly and securely. Otherwise, the servo motor may operate unexpectedly, resulting in injury.
- Connect cables to the correct terminals. Otherwise, a burst, damage, etc. may occur.
- Ensure that polarity (+/-) is correct. Otherwise, a burst, damage, etc. may occur.
- The surge absorbing diode installed to the DC relay for control output should be fitted in the specified direction. Otherwise, the emergency stop and other protective circuits may not operate.

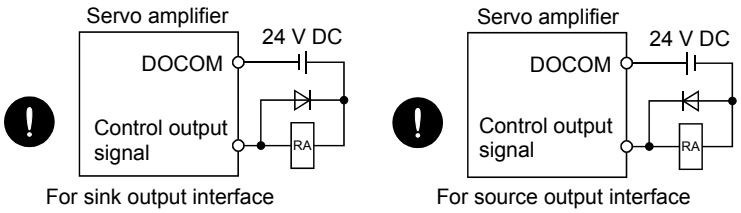

- Use a noise filter, etc. to minimize the influence of electromagnetic interference. Electromagnetic interference may be given to the electronic equipment used near the servo amplifier.
- Do not install a power capacitor, surge killer or radio noise filter (optional FR-BIF(-H)) with the power line of the servo motor.
- When using the regenerative resistor, switch power off with the alarm signal. Otherwise, a transistor fault or the like may overheat the regenerative resistor, causing a fire.
- Do not modify the equipment.

⚠CAUTION

●Connect the servo amplifier power output (U/V/W) to the servo motor power input (U/V/W) directly. Do not let a magnetic contactor, etc. intervene. Otherwise, it may cause a malfunction.

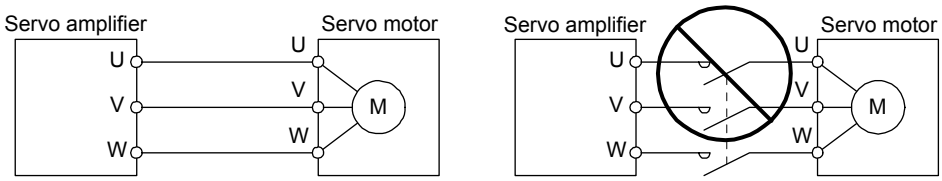

●Connecting a servo motor of the wrong axis to U, V, W, or CN2 of the servo amplifier may cause a malfunction.

●Before wiring, switch operation, etc., eliminate static electricity. Otherwise, it may cause a malfunction.

POINT

●When you use a linear servo motor, replace the following words in the left to the words in the right.

Load to motor inertia ratio	→ Load mass
Torque	→ Thrust

3.1 Connection example of power circuit

⚠CAUTION

- Always connect a magnetic contactor between the power supply and the main circuit power supply (L1/L2/L3) of the servo amplifier, in order to configure a circuit that shuts down the power supply on the side of the servo amplifier's power supply. If a magnetic contactor is not connected, continuous flow of a large current may cause a fire when the servo amplifier malfunctions.
- Use ALM (Malfunction) to switch main circuit power supply off. Not doing so may cause a fire when a regenerative transistor malfunctions or the like may overheat the regenerative resistor.
- Check the servo amplifier model, and then input proper voltage to the servo amplifier power supply. If input voltage exceeds the upper limit, the servo amplifier will break down.
- The servo amplifier has a built-in surge absorber (varistor) to reduce exogenous noise and to suppress lightning surge. Exogenous noise or lightning surge deteriorates the varistor characteristics, and the varistor may be damaged. To prevent a fire, use a molded-case circuit breaker or fuse for input power supply.
- Connecting a servo motor of the wrong axis to U, V, W, or CN2 of the servo amplifier may cause a malfunction.
- The N- terminal is not a neutral point of the power supply. Incorrect wiring will cause a burst, damage, etc.

POINT

- Even if alarm has occurred, do not switch off the control circuit power supply. When the control circuit power supply has been switched off, network module does not operate, and transmission of network communication is interrupted. Therefore, the next axis servo amplifier displays "AA" at the indicator and turns into base circuit shut-off. The servo motor stops with starting dynamic brake.
- EM2 has the same function as EM1 in the torque mode.
- When using the servo amplifier with the DC power supply input, refer to app. 1.

Configure the wiring so that the main circuit power supply is shut off and the servo-on command turns off after deceleration to a stop due to an alarm occurring, an enabled servo forced stop, or a sudden stop command from controller. A molded-case circuit breaker (MCCB) must be used with the input cables of the main circuit power supply.

3.1.1 200 V class

(1) Using 3-phase 200 V AC to 240 V AC power supply for MR-J4-10TM to MR-J4-350TM

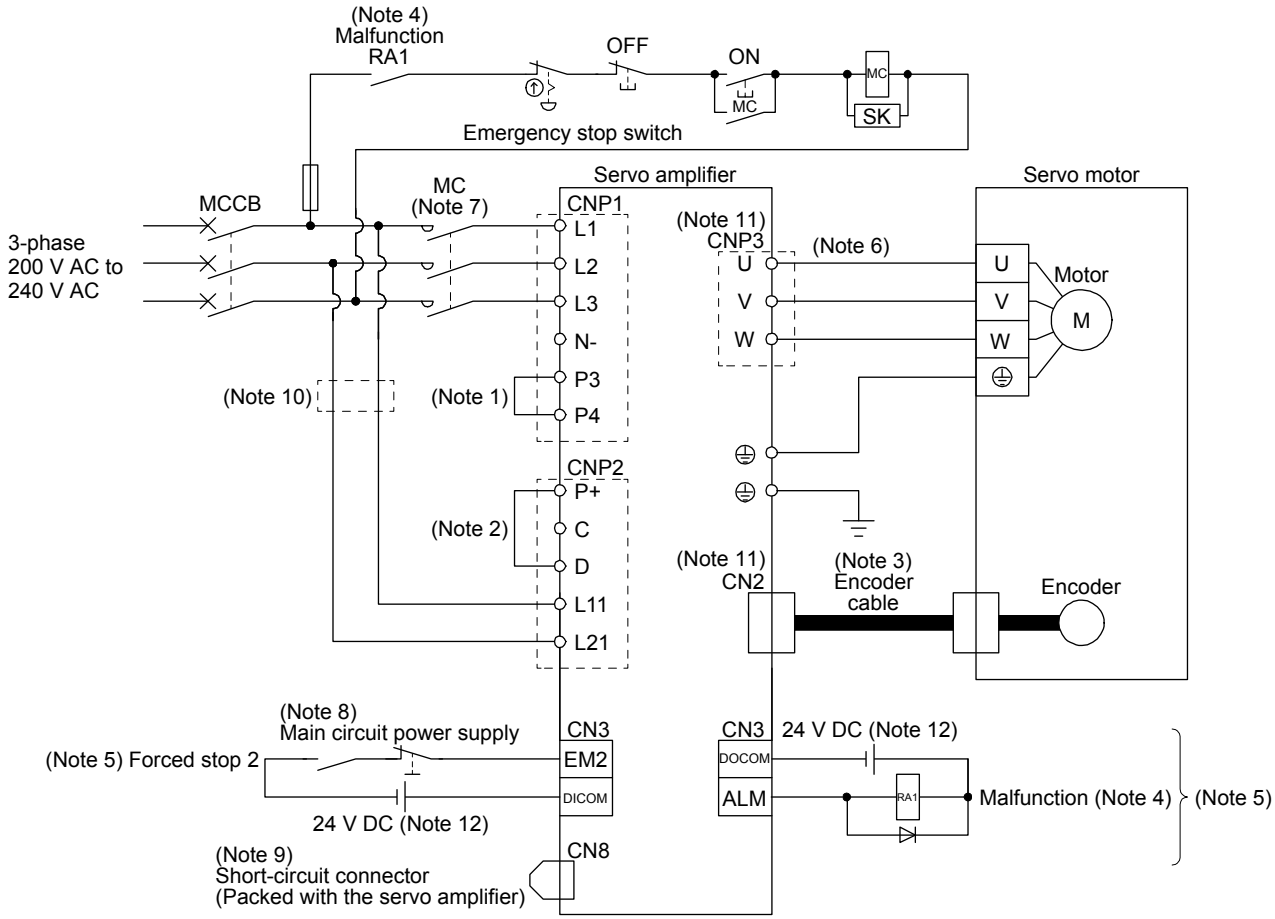

Note 1. Between P3 and P4 is connected by default. When using the power factor improving DC reactor, remove the short bar between P3 and P4. Refer to section 11.11 for details. Additionally, a power factor improving DC reactor and power factor improving AC reactor cannot be used simultaneously.

2. Always connect between P+ and D terminals. (factory-wired) When using the regenerative option, refer to section 11.2.

3. For the encoder cable, use of the option cable is recommended. For selecting cables, refer to "Servo Motor Instruction Manual (Vol. 3)".

4. If disabling ALM (Malfunction) output with the parameter, configure up the power supply circuit which switches off the magnetic contactor after detection of alarm occurrence on the controller side.

5. This diagram shows sink I/O interface. For source I/O interface, refer to section 3.8.3.

6. For connecting servo motor power wires, refer to "Servo Motor Instruction Manual (Vol. 3)".

7. Use a magnetic contactor with an operation delay time (interval between current being applied to the coil until closure of contacts) of 80 ms or less. Depending on the main circuit voltage and operation pattern, bus voltage decreases, and that may cause the forced stop deceleration to shift to the dynamic brake deceleration. When dynamic brake deceleration is not required, slow the time to turn off the magnetic contactor.

8. Configure a circuit to turn off EM2 when the main circuit power is turned off to prevent an unexpected restart of the servo amplifier.

9. When not using the STO function, attach the short-circuit connector came with a servo amplifier.

10. When wires used for L11 and L21 are thinner than wires used for L1, L2, and L3, use a molded-case circuit breaker. (Refer to section 11.10.)

11. Connecting a servo motor of the wrong axis to U, V, W, or CN2 of the servo amplifier may cause a malfunction.

12. The illustration of the 24 V DC power supply is divided between input signal and output signal for convenience. However, they can be configured by one.

(2) Using 1-phase 200 V AC to 240 V AC power supply for MR-J4-10TM to MR-J4-200TM

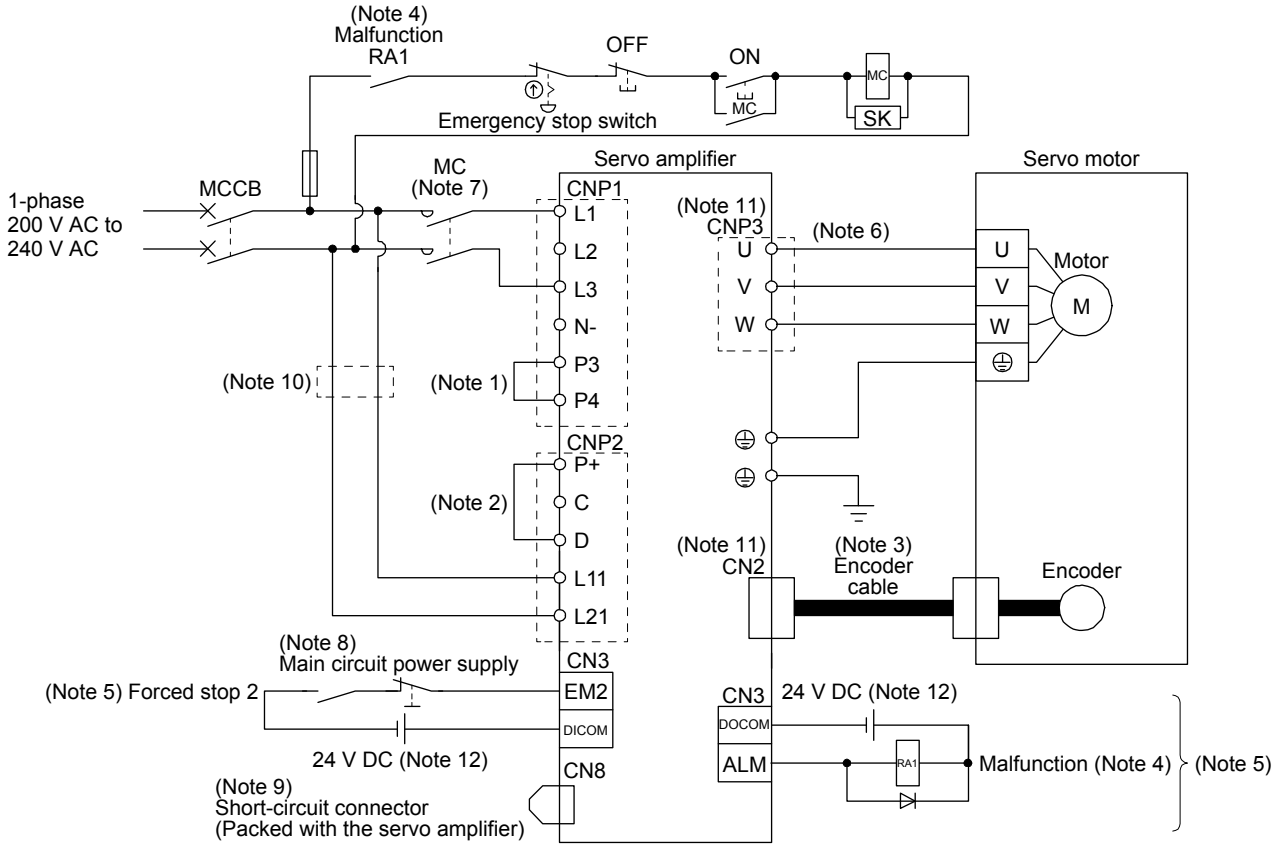

Note 1. Between P3 and P4 is connected by default. When using the power factor improving DC reactor, remove the short bar between P3 and P4. Refer to section 11.11 for details. Additionally, a power factor improving DC reactor and power factor improving AC reactor cannot be used simultaneously.

2. Always connect between P+ and D terminals. (factory-wired) When using the regenerative option, refer to section 11.2.

3. For the encoder cable, use of the option cable is recommended. For selecting cables, refer to "Servo Motor Instruction Manual (Vol. 3)".

4. If disabling ALM (Malfunction) output with the parameter, configure up the power supply circuit which switches off the magnetic contactor after detection of alarm occurrence on the controller side.

5. This diagram shows sink I/O interface. For source I/O interface, refer to section 3.8.3.

6. For connecting servo motor power wires, refer to "Servo Motor Instruction Manual (Vol. 3)".

7. Use a magnetic contactor with an operation delay time (interval between current being applied to the coil until closure of contacts) of 80 ms or less. Depending on the main circuit voltage and operation pattern, bus voltage decreases, and that may cause the forced stop deceleration to shift to the dynamic brake deceleration. When dynamic brake deceleration is not required, slow the time to turn off the magnetic contactor.

8. Configure a circuit to turn off EM2 when the main circuit power is turned off to prevent an unexpected restart of the servo amplifier.

9. When not using the STO function, attach the short-circuit connector came with a servo amplifier.

10. When wires used for L11 and L21 are thinner than wires used for L1, and L3, use a molded-case circuit breaker. (Refer to section 11.10.)

11. Connecting a servo motor of the wrong axis to U, V, W, or CN2 of the servo amplifier may cause a malfunction.

12. The illustration of the 24 V DC power supply is divided between input signal and output signal for convenience. However, they can be configured by one.

(3) MR-J4-500TM

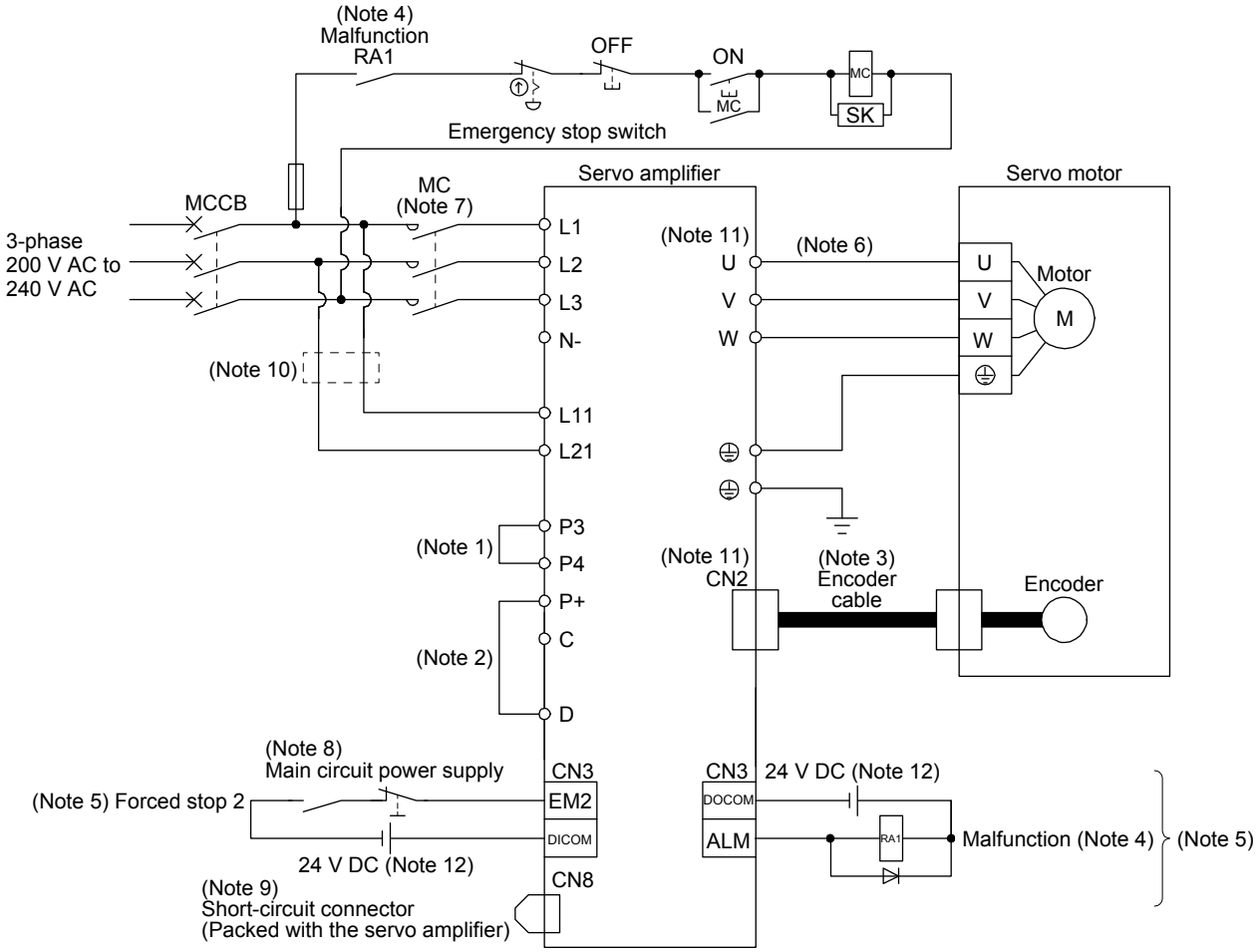

Note 1. Between P3 and P4 is connected by default. When using the power factor improving DC reactor, remove the short bar between P3 and P4. Refer to section 11.11 for details. Additionally, a power factor improving DC reactor and power factor improving AC reactor cannot be used simultaneously.

2. Always connect between P+ and D terminals. (factory-wired) When using the regenerative option, refer to section 11.2.

3. For the encoder cable, use of the option cable is recommended. For selecting cables, refer to "Servo Motor Instruction Manual (Vol. 3)".

4. If disabling ALM (Malfunction) output with the parameter, configure up the power supply circuit which switches off the magnetic contactor after detection of alarm occurrence on the controller side.

5. This diagram shows sink I/O interface. For source I/O interface, refer to section 3.8.3.

6. For connecting servo motor power wires, refer to "Servo Motor Instruction Manual (Vol. 3)".

7. Use a magnetic contactor with an operation delay time (interval between current being applied to the coil until closure of contacts) of 80 ms or less. Depending on the main circuit voltage and operation pattern, bus voltage decreases, and that may cause the forced stop deceleration to shift to the dynamic brake deceleration. When dynamic brake deceleration is not required, slow the time to turn off the magnetic contactor.

8. Configure a circuit to turn off EM2 when the main circuit power is turned off to prevent an unexpected restart of the servo amplifier.

9. When not using the STO function, attach the short-circuit connector came with a servo amplifier.

10. When wires used for L11 and L21 are thinner than wires used for L1, L2, and L3, use a molded-case circuit breaker. (Refer to section 11.10.)

11. Connecting a servo motor of the wrong axis to U, V, W, or CN2 of the servo amplifier may cause a malfunction.

12. The illustration of the 24 V DC power supply is divided between input signal and output signal for convenience. However, they can be configured by one.

(4) MR-J4-700TM

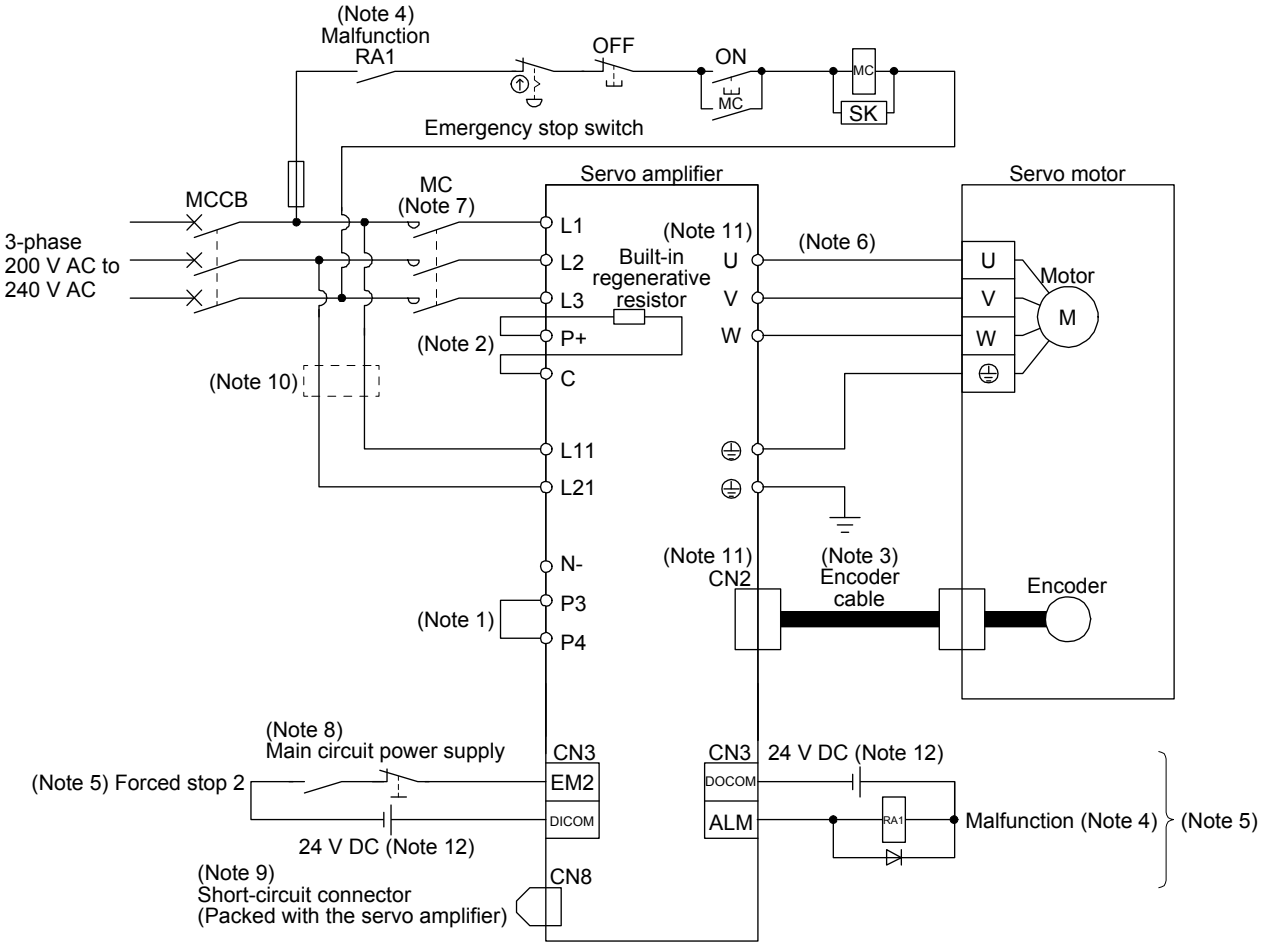

Note 1. Between P3 and P4 is connected by default. When using the power factor improving DC reactor, remove the short bar between P3 and P4. Refer to section 11.11 for details. Additionally, a power factor improving DC reactor and power factor improving AC reactor cannot be used simultaneously.

2. When using the regenerative option, refer to section 11.2.

3. For the encoder cable, use of the option cable is recommended. For selecting cables, refer to "Servo Motor Instruction Manual (Vol. 3)".

4. If disabling ALM (Malfunction) output with the parameter, configure up the power supply circuit which switches off the magnetic contactor after detection of alarm occurrence on the controller side.

5. This diagram shows sink I/O interface. For source I/O interface, refer to section 3.8.3.

6. For connecting servo motor power wires, refer to "Servo Motor Instruction Manual (Vol. 3)".

7. Use a magnetic contactor with an operation delay time (interval between current being applied to the coil until closure of contacts) of 80 ms or less. Depending on the main circuit voltage and operation pattern, bus voltage decreases, and that may cause the forced stop deceleration to shift to the dynamic brake deceleration. When dynamic brake deceleration is not required, slow the time to turn off the magnetic contactor.

8. Configure a circuit to turn off EM2 when the main circuit power is turned off to prevent an unexpected restart of the servo amplifier.

9. When not using the STO function, attach the short-circuit connector came with a servo amplifier.

10. When wires used for L11 and L21 are thinner than wires used for L1, L2, and L3, use a molded-case circuit breaker. (Refer to section 11.10.)

11. Connecting a servo motor of the wrong axis to U, V, W, or CN2 of the servo amplifier may cause a malfunction.

12. The illustration of the 24 V DC power supply is divided between input signal and output signal for convenience. However, they can be configured by one.

(5) MR-J4-11KTM/MR-J4-15KTM/MR-J4-22KTM

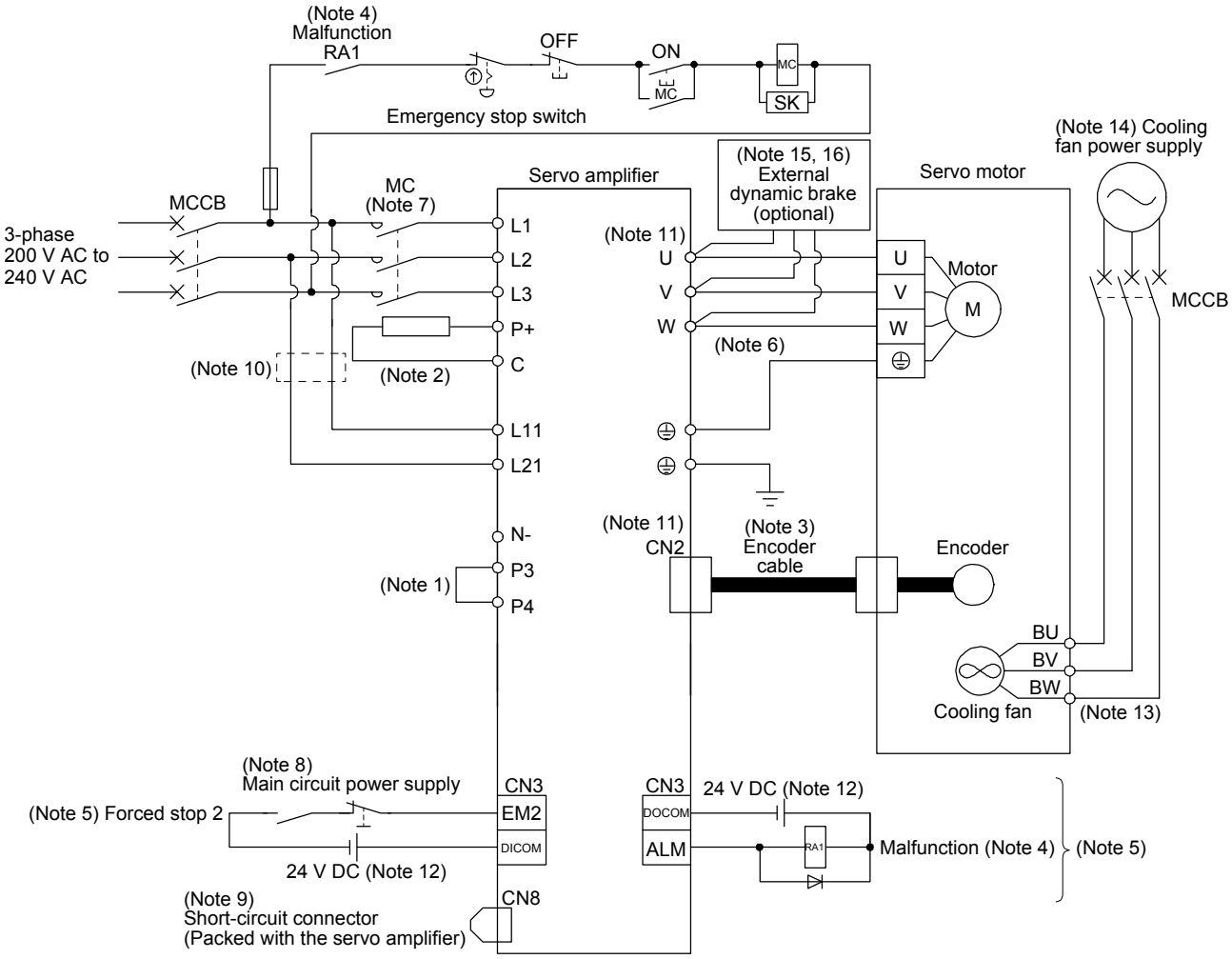

Note 1. Between P3 and P4 is connected by default. When using the power factor improving DC reactor, remove the short bar between P3 and P4. Refer to section 11.11 for details. Additionally, a power factor improving DC reactor and power factor improving AC reactor cannot be used simultaneously.
2. When using the regenerative option, refer to section 11.2.
3. For the encoder cable, use of the option cable is recommended. For selecting cables, refer to "Servo Motor Instruction Manual (Vol. 3)".
4. If disabling ALM (Malfunction) output with the parameter, configure up the power supply circuit which switches off the magnetic contactor after detection of alarm occurrence on the controller side.
5. This diagram shows sink I/O interface. For source I/O interface, refer to section 3.8.3.
6. For connecting servo motor power wires, refer to "Servo Motor Instruction Manual (Vol. 3)".
7. Use a magnetic contactor with an operation delay time (interval between current being applied to the coil until closure of contacts) of 80 ms or less. Depending on the main circuit voltage and operation pattern, bus voltage decreases, and that may cause the forced stop deceleration to shift to the dynamic brake deceleration. When dynamic brake deceleration is not required, slow the time to turn off the magnetic contactor.
8. Configure a circuit to turn off EM2 when the main circuit power is turned off to prevent an unexpected restart of the servo amplifier.
9. When not using the STO function, attach the short-circuit connector came with a servo amplifier.
10. When wires used for L11 and L21 are thinner than wires used for L1, L2, and L3, use a molded-case circuit breaker. (Refer to section 11.10.)
11. Connecting a servo motor of the wrong axis to U, V, W, or CN2 of the servo amplifier may cause a malfunction.
12. The illustration of the 24 V DC power supply is divided between input signal and output signal for convenience. However, they can be configured by one.
13. For the servo motor with a cooling fan.
14. For the cooling fan power supply, refer to "Servo Motor Instruction Manual (Vol. 3)".
15. Use an external dynamic brake for this servo amplifier. Failure to do so will cause an accident because the servo motor does not stop immediately but coasts at an alarm occurrence for which the servo motor does not decelerate to stop. Ensure the safety in the entire equipment. For alarms for which the servo motor does not decelerate to stop, refer to chapter 8. For wiring of the external dynamic brake, refer to section 11.17.
16. The external dynamic brake cannot be used for compliance with SEMI-F47 standard. Do not assign DB (Dynamic brake interlock) in [Pr. PD07] to [Pr. PD09]. Failure to do so will cause the servo amplifier to become servo-off when an instantaneous power failure occurs.

3.1.2 400 V class

(1) MR-J4-60TM4 to MR-J4-350TM4

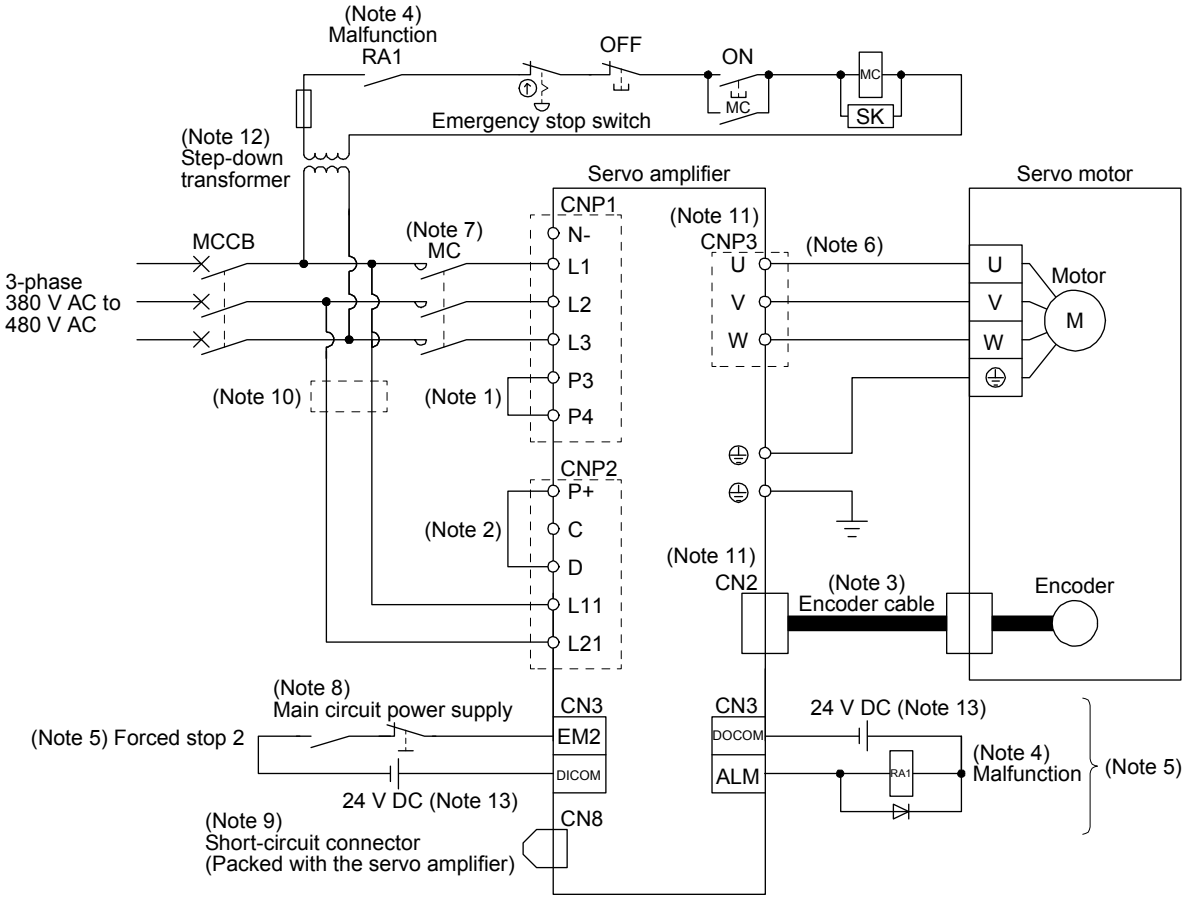

Note 1. Between P3 and P4 is connected by default. When using the power factor improving DC reactor, remove the short bar between P3 and P4. Refer to section 11.11 for details. Additionally, a power factor improving DC reactor and power factor improving AC reactor cannot be used simultaneously.

2. Always connect between P+ and D terminals. (factory-wired) When using the regenerative option, refer to section 11.2.
3. For the encoder cable, use of the option cable is recommended. For selecting cables, refer to "Servo Motor Instruction Manual (Vol. 3)".
4. If disabling ALM (Malfunction) output with the parameter, configure up the power supply circuit which switches off the magnetic contactor after detection of alarm occurrence on the controller side.
5. This diagram shows sink I/O interface. For source I/O interface, refer to section 3.8.3.
6. For connecting servo motor power wires, refer to "Servo Motor Instruction Manual (Vol. 3)".
7. Use a magnetic contactor with an operation delay time (interval between current being applied to the coil until closure of contacts) of 80 ms or less. Depending on the main circuit voltage and operation pattern, bus voltage decreases, and that may cause the forced stop deceleration to shift to the dynamic brake deceleration. When dynamic brake deceleration is not required, slow the time to turn off the magnetic contactor.
8. Configure a circuit to turn off EM2 when the main circuit power is turned off to prevent an unexpected restart of the servo amplifier.
9. When not using the STO function, attach the short-circuit connector came with a servo amplifier.
10. When wires used for L11 and L21 are thinner than wires used for L1, L2, and L3, use a molded-case circuit breaker. (Refer to section 11.10.)
11. Connecting a servo motor for different axis to U, V, W, or CN2 of the servo amplifier may cause a malfunction.
12. Stepdown transformer is required when the coil voltage of the magnetic contactor is 200 V class.
13. The illustration of the 24 V DC power supply is divided between input signal and output signal for convenience. However, they can be configured by one.

(2) MR-J4-500TM4/MR-J4-700TM4

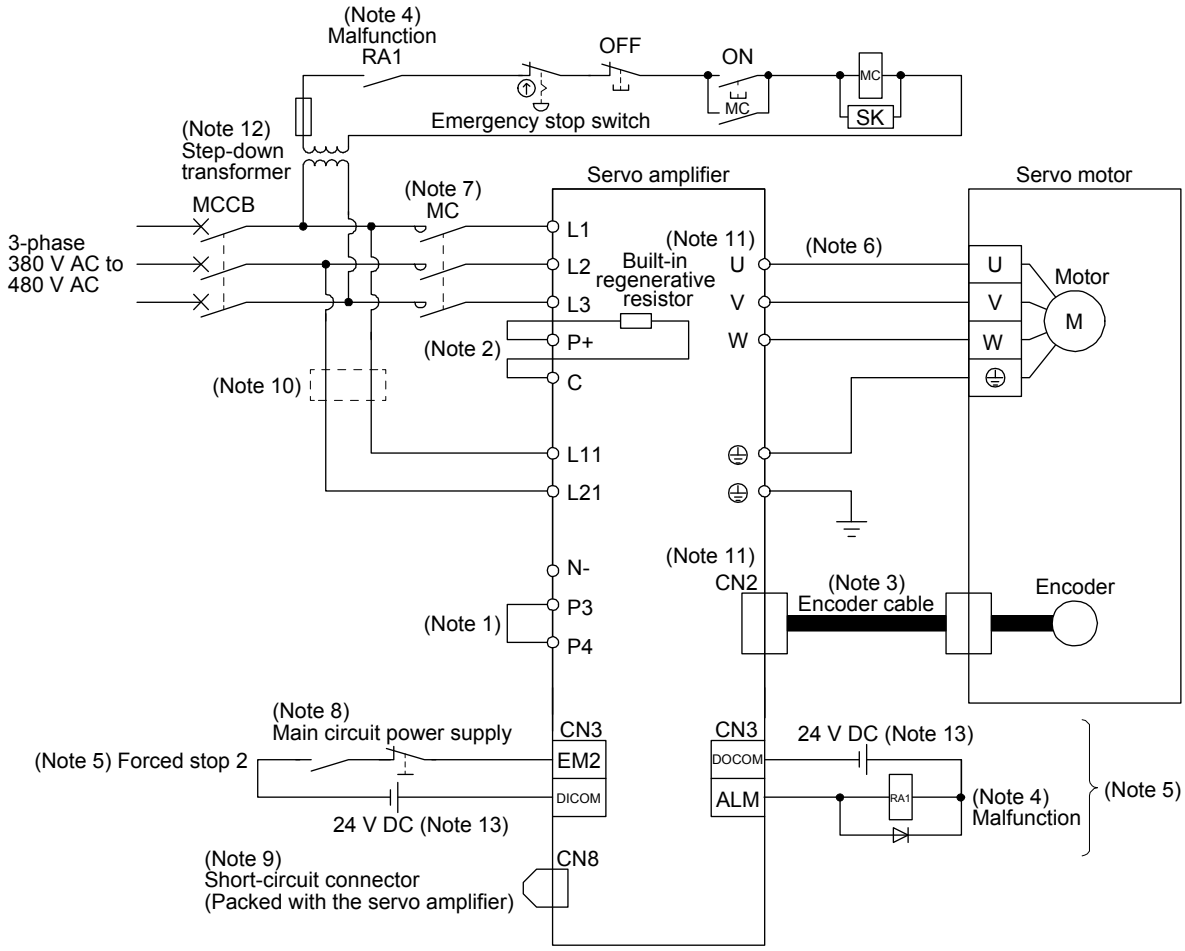

Note 1. Between P3 and P4 is connected by default. When using the power factor improving DC reactor, remove the short bar between P3 and P4. Refer to section 11.11 for details. Additionally, a power factor improving DC reactor and power factor improving AC reactor cannot be used simultaneously.

2. When using the regenerative option, refer to section 11.2.

3. For the encoder cable, use of the option cable is recommended. For selecting cables, refer to "Servo Motor Instruction Manual (Vol. 3)".

4. If disabling ALM (Malfunction) output with the parameter, configure up the power supply circuit which switches off the magnetic contactor after detection of alarm occurrence on the controller side.

5. This diagram shows sink I/O interface. For source I/O interface, refer to section 3.8.3.

6. For connecting servo motor power wires, refer to "Servo Motor Instruction Manual (Vol. 3)".

7. Use a magnetic contactor with an operation delay time (interval between current being applied to the coil until closure of contacts) of 80 ms or less. Depending on the main circuit voltage and operation pattern, bus voltage decreases, and that may cause the forced stop deceleration to shift to the dynamic brake deceleration. When dynamic brake deceleration is not required, slow the time to turn off the magnetic contactor.

8. Configure a circuit to turn off EM2 when the main circuit power is turned off to prevent an unexpected restart of the servo amplifier.

9. When not using the STO function, attach the short-circuit connector came with a servo amplifier.

10. When wires used for L11 and L21 are thinner than wires used for L1, L2, and L3, use a molded-case circuit breaker. (Refer to section 11.10.)

11. Connecting a servo motor for different axis to U, V, W, or CN2 of the servo amplifier may cause a malfunction.

12. Stepdown transformer is required when the coil voltage of the magnetic contactor is 200 V class.

13. The illustration of the 24 V DC power supply is divided between input signal and output signal for convenience. However, they can be configured by one.

(3) MR-J4-11KTM4/MR-J4-15KTM4/MR-J4-22KTM4

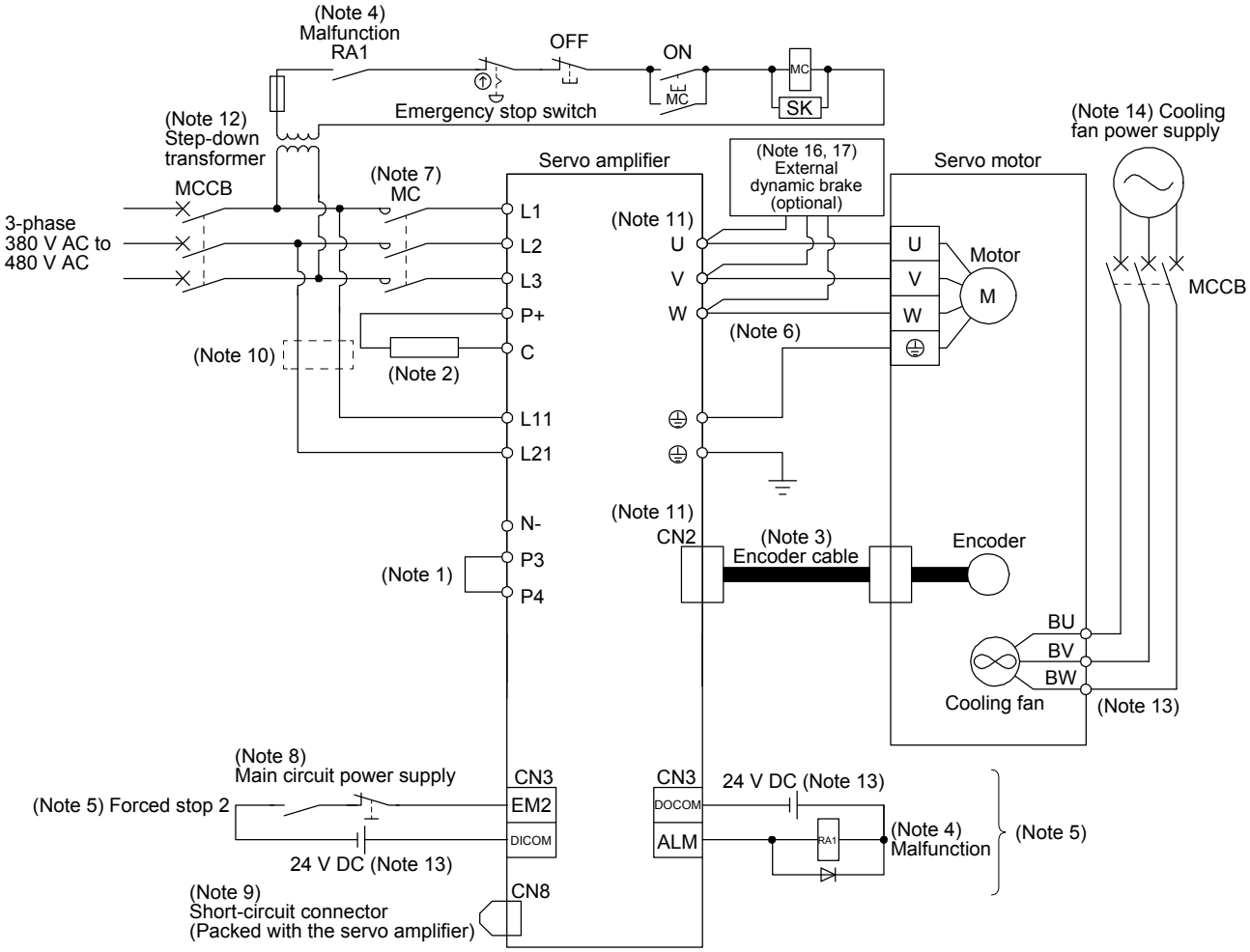

Note 1. Between P3 and P4 is connected by default. When using the power factor improving DC reactor, remove the short bar between P3 and P4. Refer to section 11.11 for details. Additionally, a power factor improving DC reactor and power factor improving AC reactor cannot be used simultaneously.
2. When using the regenerative option, refer to section 11.2.
3. For the encoder cable, use of the option cable is recommended. For selecting cables, refer to "Servo Motor Instruction Manual (Vol. 3)".
4. If disabling ALM (Malfunction) output with the parameter, configure up the power supply circuit which switches off the magnetic contactor after detection of alarm occurrence on the controller side.
5. This diagram shows sink I/O interface. For source I/O interface, refer to section 3.8.3.
6. For connecting servo motor power wires, refer to "Servo Motor Instruction Manual (Vol. 3)".
7. Use a magnetic contactor with an operation delay time (interval between current being applied to the coil until closure of contacts) of 80 ms or less. Depending on the main circuit voltage and operation pattern, bus voltage decreases, and that may cause the forced stop deceleration to shift to the dynamic brake deceleration. When dynamic brake deceleration is not required, slow the time to turn off the magnetic contactor.
8. Configure a circuit to turn off EM2 when the main circuit power is turned off to prevent an unexpected restart of the servo amplifier.
9. When not using the STO function, attach the short-circuit connector came with a servo amplifier.
10. When wires used for L11 and L21 are thinner than wires used for L1, L2, and L3, use a molded-case circuit breaker. (Refer to section 11.10.)
11. Connecting a servo motor for different axis to U, V, W, or CN2 of the servo amplifier may cause a malfunction.
12. Stepdown transformer is required when the coil voltage of the magnetic contactor is 200 V class.
13. For the servo motor with a cooling fan.
14. For the cooling fan power supply, refer to "Servo Motor Instruction Manual (Vol. 3)".
15. The illustration of the 24 V DC power supply is divided between input signal and output signal for convenience. However, they can be configured by one.
16. Use an external dynamic brake for this servo amplifier. Failure to do so will cause an accident because the servo motor does not stop immediately but coasts at an alarm occurrence for which the servo motor does not decelerate to stop. Ensure the safety in the entire equipment. For alarms for which the servo motor does not decelerate to stop, refer to chapter 8. For wiring of the external dynamic brake, refer to section 11.17.
17. The external dynamic brake cannot be used for compliance with SEMI-F47 standard. Do not assign DB (Dynamic brake interlock) in [Pr. PD07] to [Pr. PD09]. Failure to do so will cause the servo amplifier to become servo-off when an instantaneous power failure occurs.

3.1.3 100 V class

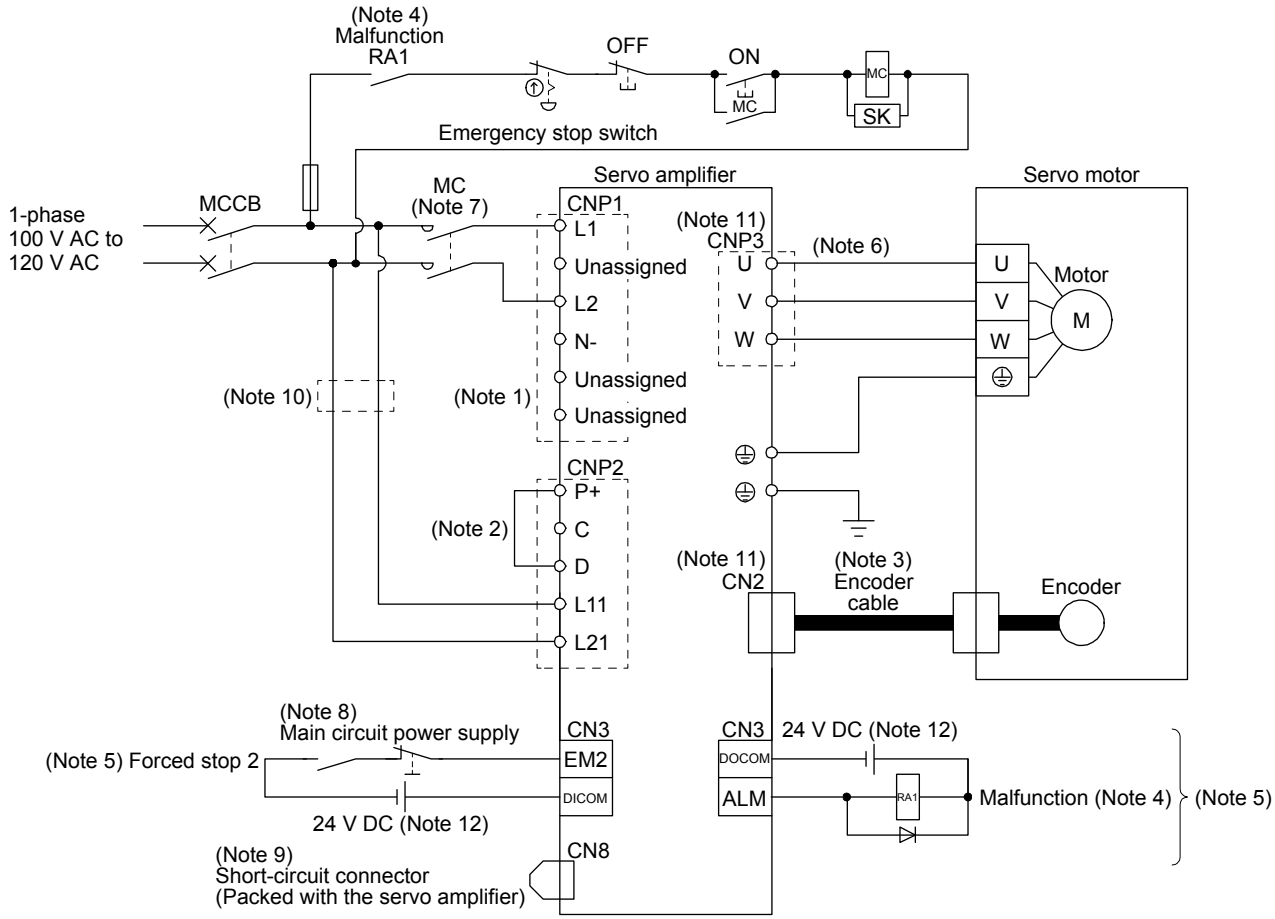

Note 1. The power factor improving DC reactor cannot be used.
2. Always connect between P+ and D terminals. (factory-wired) When using the regenerative option, refer to section 11.2.
3. For the encoder cable, use of the option cable is recommended. For selecting cables, refer to "Servo Motor Instruction Manual (Vol. 3)".
4. If disabling ALM (Malfunction) output with the parameter, configure up the power supply circuit which switches off the magnetic contactor after detection of alarm occurrence on the controller side.
5. This diagram shows sink I/O interface. For source I/O interface, refer to section 3.8.3.
6. For connecting servo motor power wires, refer to "Servo Motor Instruction Manual (Vol. 3)".
7. Use a magnetic contactor with an operation delay time (interval between current being applied to the coil until closure of contacts) of 80 ms or less. Depending on the main circuit voltage and operation pattern, bus voltage decreases, and that may cause the forced stop deceleration to shift to the dynamic brake deceleration. When dynamic brake deceleration is not required, slow the time to turn off the magnetic contactor.
8. Configure a circuit to turn off EM2 when the main circuit power is turned off to prevent an unexpected restart of the servo amplifier.
9. When not using the STO function, attach the short-circuit connector came with a servo amplifier.
10. When wires used for L11 and L21 are thinner than wires used for L1 and L2, use a molded-case circuit breaker. (Refer to section 11.10.)
11. Connecting a servo motor of the wrong axis to U, V, W, or CN2 of the servo amplifier may cause a malfunction.
12. The illustration of the 24 V DC power supply is divided between input signal and output signal for convenience. However, they can be configured by one.

3.2 I/O signal connection example

POINT
●EM2 has the same function as EM1 in the torque mode.

3.2.1 For sink I/O interface

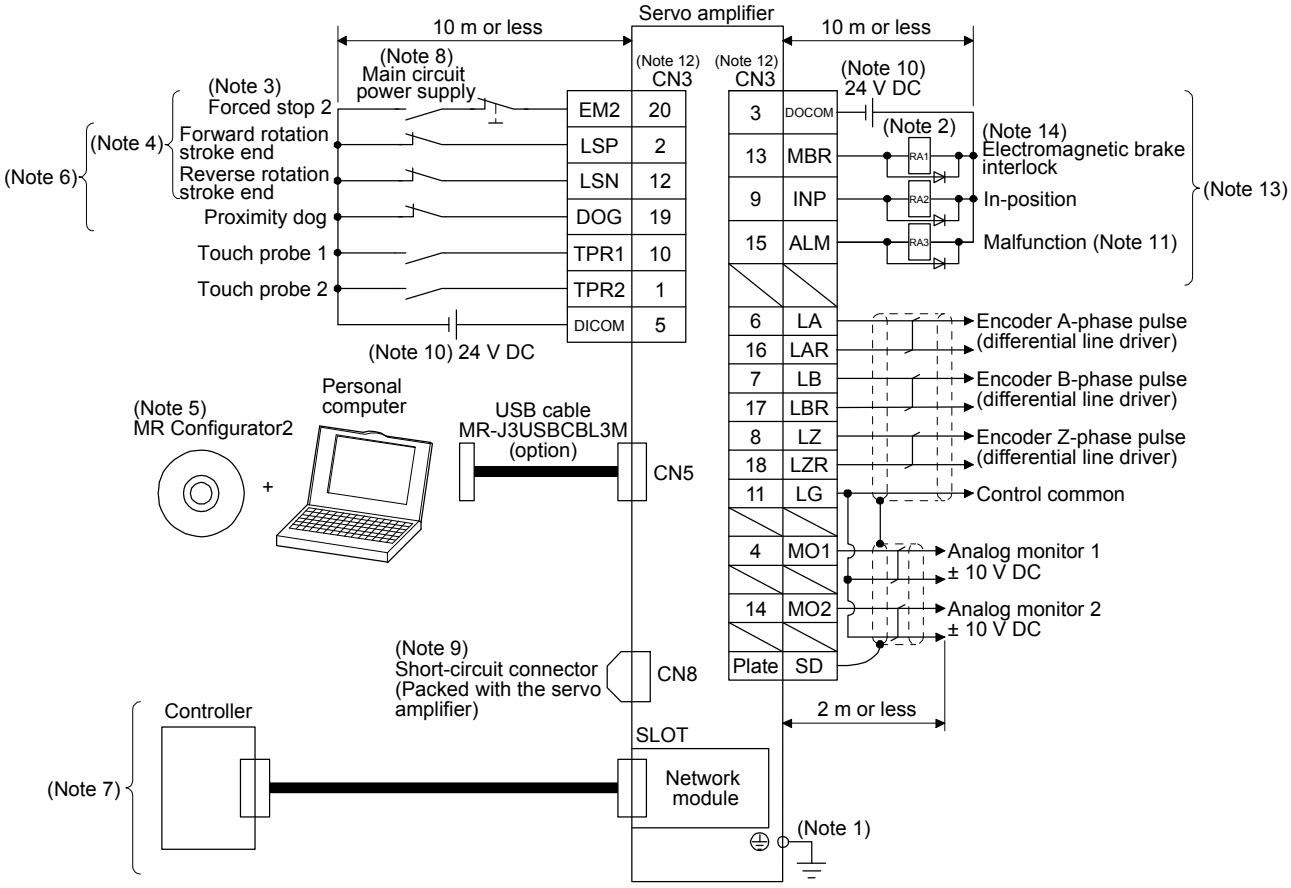

Note 1. To prevent an electric shock, always connect the protective earth (PE) terminal (marked ⏚) of the servo amplifier to the protective earth (PE) of the cabinet.
2. Connect the diode in the correct direction. If it is connected reversely, the servo amplifier will malfunction and will not output signals, disabling EM2 (Forced stop 2) and other protective circuits.
3. If the controller does not have forced stop function, always install the forced stop 2 switch (normally closed contact).
4. When starting operation, always turn on EM2 (Forced stop 2), LSP (Forward rotation stroke end) and LSN (Reverse rotation stroke end). (Normally closed contact)
5. Use SW1DNC-MRC2-_. (Refer to section 11.7.)
6. You can change devices of these pins with [Pr. PD03], [Pr. PD05], and [Pr. PD06].
7. For the network connections, refer to respective communication method manuals of "MR-J4-_TM_ Servo Amplifier Instruction Manual".
8. Configure a circuit to turn off EM2 when the main circuit power is turned off to prevent an unexpected restart of the servo amplifier.
9. When not using the STO function, attach the short-circuit connector came with a servo amplifier.
10. Supply 24 V DC ± 10% for interfaces from outside. Set the total current capacity to 300 mA. 300 mA is the value applicable when all I/O signals are used. The current capacity can be decreased by reducing the number of I/O points. Refer to section 3.8.2 (1) that gives the current value necessary for the interface. The illustration of the 24 V DC power supply is divided between input signal and output signal for convenience. However, they can be configured by one.
11. ALM (Malfunction) turns on in normal alarm-free condition. (Normally closed contact)
12. The pins with the same signal name are connected in the servo amplifier.
13. You can change devices of these pins with [Pr. PD07], [Pr. PD08], and [Pr. PD09].
14. When you use a linear servo motor or direct drive motor, use MBR (Electromagnetic brake interlock) for an external brake mechanism.

3.2.2 For source I/O interface

POINT
●For notes, refer to section 3.2.1.

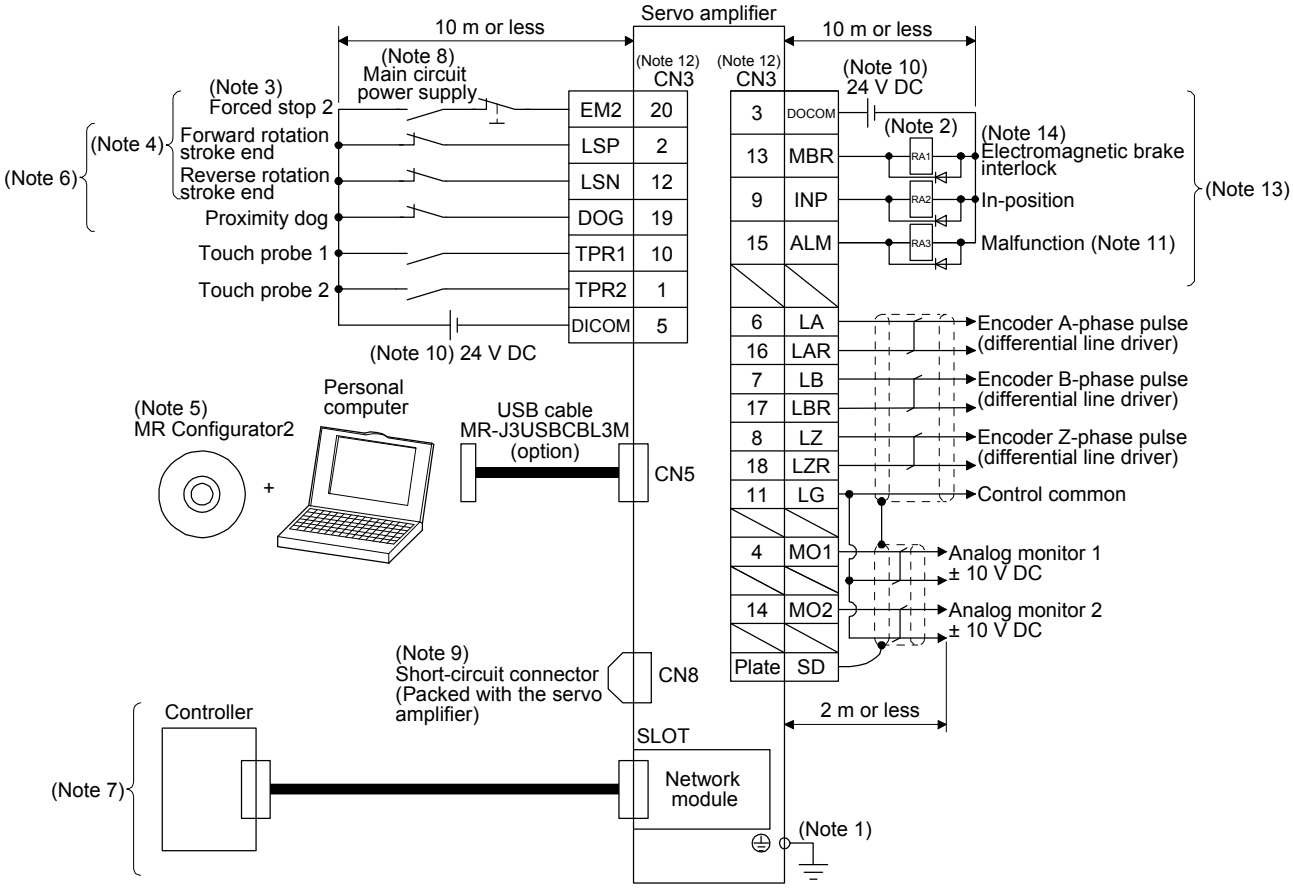

3.3 Explanation of power supply system

3.3.1 Signal explanations

POINT

- For the layout of connector and terminal block, refer to chapter 9 DIMENSIONS.
- When using the servo amplifier with the DC power supply input, refer to app. 1.

<table>
<tr><th>Symbol</th><th>Connection target (application)</th><th>Description</th></tr>
<tr><td>L1/L2/L3</td><td>Main circuit power supply</td><td>Supply the following power to L1, L2, and L3. For 1-phase 200 V AC to 240 V AC, connect the power supply to L1 and L3. Leave L2 open.
<table>
<tr><th>Servo amplifier / Power</th><th>MR-J4-10TM to MR-J4-200TM</th><th>MR-J4-350TM to MR-J4-22KTM</th><th>MR-J4-60TM4 to MR-J4-22KTM4</th><th>MR-J4-10TM1 to MR-J4-40TM1</th></tr>
<tr><td>3-phase 200 V AC to 240 V AC, 50 Hz/60 Hz</td><td colspan="2">L1/L2/L3</td><td></td><td></td></tr>
<tr><td>1-phase 200 V AC to 240 V AC, 50 Hz/60 Hz</td><td>L1/L3</td><td></td><td></td><td></td></tr>
<tr><td>3-phase 380 V AC to 480 V AC, 50 Hz/60 Hz</td><td></td><td></td><td>L1/L2/L3</td><td></td></tr>
<tr><td>1-phase 100 V AC to 120 V AC, 50 Hz/60 Hz</td><td></td><td></td><td></td><td>L1/L2</td></tr>
</table></td></tr>
<tr><td>P3/P4</td><td>Power factor improving DC reactor</td><td>When not using the power factor improving DC reactor, connect P3 and P4. (factory-wired)
When using the power factor improving DC reactor, disconnect P3 and P4, and connect the power factor improving DC reactor to P3 and P4. Additionally, the power factor improving DC reactor cannot be used for the 100 V class servo amplifiers.
Refer to section 11.11 for details.</td></tr>
<tr><td>P+/C/D</td><td>Regenerative option</td><td>(1) 200 V class/100 V class
1) MR-J4-500TM or less and MR-J4-40TM1 or less
When using a servo amplifier built-in regenerative resistor, connect P+ and D. (factory-wired)
When using a regenerative option, disconnect P+ and D, and connect the regenerative option to P+ and C.
2) MR-J4-700TM to MR-J4-22KTM
MR-J4-700TM to MR-J4-22KTM do not have D.
When using a servo amplifier built-in regenerative resistor, connect P+ and C. (factory-wired)
When using a regenerative option, disconnect wires of P+ and C for the built-in regenerative resistor. And then connect wires of the regenerative option to P+ and C.
(2) 400 V class
1) MR-J4-350TM4 or less
When using a servo amplifier built-in regenerative resistor, connect P+ and D. (factory-wired)
When using a regenerative option, disconnect P+ and D, and connect the regenerative option to P+ and C.
2) MR-J4-500TM4 to MR-J4-22KTM4
MR-J4-500TM4 to MR-J4-22KTM4 do not have D.
When using a servo amplifier built-in regenerative resistor, connect P+ and C. (factory-wired)
When using a regenerative option, disconnect wires of P+ and C for the built-in regenerative resistor. And then connect wires of the regenerative option to P+ and C.
Refer to section 11.2 for details.</td></tr>
</table>

<table>
<tr><th>Symbol</th><th>Connection target (application)</th><th>Description</th></tr>
<tr><td>L11/L21</td><td>Control circuit power supply</td><td>Supply the following power to L11 and L21.
<table>
<tr><th>Servo amplifier / Power</th><th>MR-J4-10TM to MR-J4-22KTM</th><th>MR-J4-60TM4 to MR-J4-22KTM4</th><th>MR-J4-10TM1 to MR-J4-40TM1</th></tr>
<tr><td>1-phase 200 V AC to 240 V AC, 50 Hz/60 Hz</td><td>L11/L21</td><td></td><td></td></tr>
<tr><td>1-phase 380 V AC to 480 V AC, 50 Hz/60 Hz</td><td></td><td>L11/L21</td><td></td></tr>
<tr><td>1-phase 100 V AC to 120 V AC, 50 Hz/60 Hz</td><td></td><td></td><td>L11/L21</td></tr>
</table></td></tr>
<tr><td>U/V/W</td><td>Servo motor power input</td><td>Connect the servo amplifier power output (U/V/W) to the servo motor power input (U/V/W) directly. Do not let a magnetic contactor, etc. intervene. Otherwise, it may cause a malfunction.</td></tr>
<tr><td>N-</td><td>Power regeneration converter
Power regeneration common converter
Brake unit</td><td>This terminal is used for a power regeneration converter, power regeneration common converter and brake unit.
Refer to section 11.3 to 11.5 for details.</td></tr>
<tr><td>⏚</td><td>Protective earth (PE)</td><td>Connect it to the grounding terminal of the servo motor and to the protective earth (PE) of the cabinet for grounding.</td></tr>
</table>

3.3.2 Power-on sequence

POINT
●The output signal, etc. may be unstable at power-on.

(1) Power-on procedure

1) Always wire the power supply as shown in above section 3.1 using the magnetic contactor with the main circuit power supply (L1/L2/L3). Configure up an external sequence to switch off the magnetic contactor as soon as an alarm occurs.

2) Switch on the control circuit power supply (L11/L21) simultaneously with the main circuit power supply or before switching on the main circuit power supply. If the control circuit power supply is turned on with the main circuit power supply off, and then the servo-on command is transmitted, [AL. E9 Main circuit off warning] will occur. Turning on the main circuit power supply stops the warning and starts the normal operation.

3) The servo amplifier receives the servo-on command in 3 s to 4 s + network initial communication time after the main circuit power supply is switched on.
(Refer to (2) in this section.)

(2) Timing chart

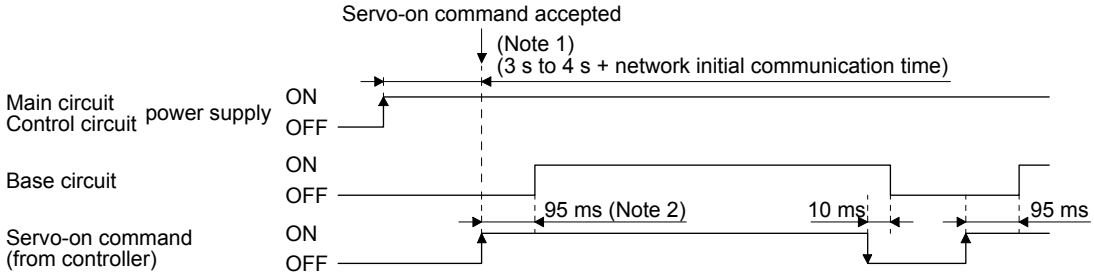

Note 1. This range will be "5 s to 6 s" + network initial communication time for the linear servo system and fully closed loop system.
2. The time will be longer during the magnetic pole detection of a linear servo motor and direct drive motor.

3.3.3 Wiring CNP1, CNP2, and CNP3

POINT

- For the wire sizes used for wiring, refer to section 11.9.
- When wiring, remove the power connectors from the servo amplifier.
- Insert only one wire or ferrule to each wire insertion hole.
- MR-J4-500TM or more and MR-J4-500TM4 or more do not have these connectors.

Use the servo amplifier power connector for wiring CNP1, CNP2, and CNP3.

(1) Connector

(a) MR-J4-10TM to MR-J4-100TM

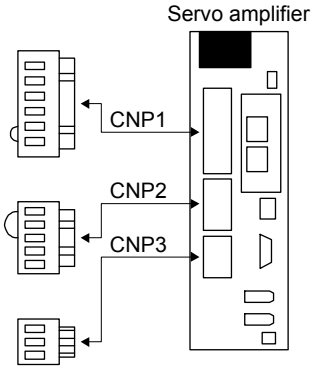

Table 3.1 Connector and applicable wire

Connector	Receptacle assembly	Applicable wire		Stripped length [mm]	Open tool	Manufacturer
		Size	Insulator OD			
CNP1	06JFAT-SAXGDK-H7.5	AWG 18 to 14	3.9 mm or shorter	9	J-FAT-OT (N) or J-FAT-OT	JST
CNP2	05JFAT-SAXGDK-H5.0					
CNP3	03JFAT-SAXGDK-H7.5					

(b) MR-J4-200TM/MR-J4-350TM

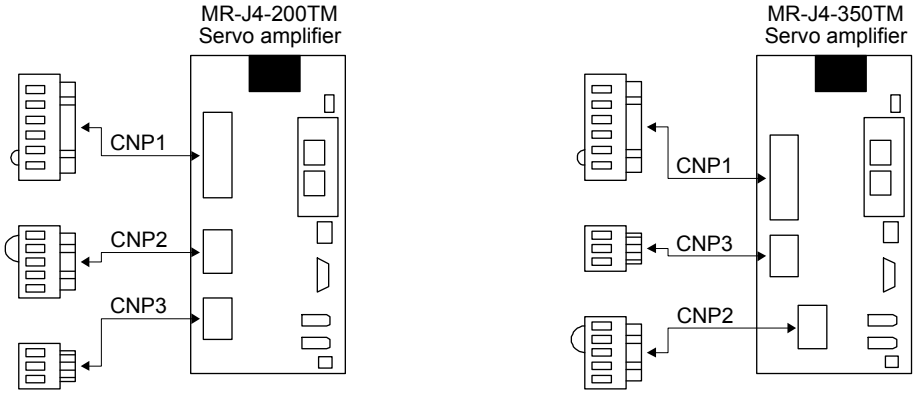

Table 3.2 Connector and applicable wire

Connector	Receptacle assembly	Applicable wire		Stripped length [mm]	Open tool	Manufacturer
		Size	Insulator OD			
CNP1	06JFAT-SAXGFK-XL	AWG 16 to 10	4.7 mm or shorter	11.5	J-FAT-OT-EXL	JST
CNP3	03JFAT-SAXGFK-XL					
CNP2	05JFAT-SAXGDK-H5.0	AWG 18 to 14	3.9 mm or shorter	9		

(c) MR-J4-60TM4 to MR-J4-350TM4

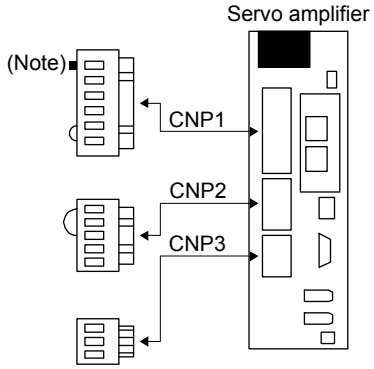

Note. A pin for preventing improper connection is inserted to N- of CNP1 connector.

Table 3.3 Connector and applicable wire

Connector	Receptacle assembly	Applicable wire		Stripped length [mm]	Open tool	Manufacturer
		Size	Insulator OD			
CNP1	06JFAT-SAXGDK-HT10.5	AWG 16 to 14	3.9 mm or shorter	10	J-FAT-OT-XL	JST
CNP2	05JFAT-SAXGDK-HT7.5					
CNP3	03JFAT-SAXGDK-HT10.5					

(d) MR-J4-10TM1 to MR-J4-40TM1

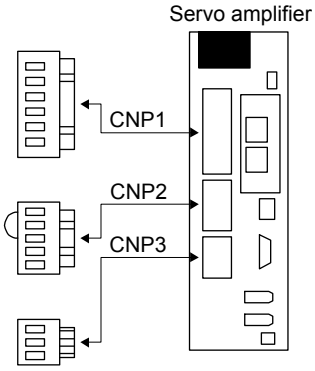

Table 3.4 Connector and applicable wire

Connector	Receptacle assembly	Applicable wire		Stripped length [mm]	Open tool	Manufacturer
		Size	Insulator OD			
CNP1	06JFAT-SAXGDK-H7.5	AWG 18 to 14	3.9 mm or shorter	9	J-FAT-OT (N) or J-FAT-OT	JST
CNP2	05JFAT-SAXGDK-H5.0					
CNP3	03JFAT-SAXGDK-H7.5					

(2) Cable connection procedure

(a) Fabrication on cable insulator

Refer to table 3.1 to 3.4 for stripped length of cable insulator. The appropriate stripped length of cables depends on their type, etc. Set the length considering their status.

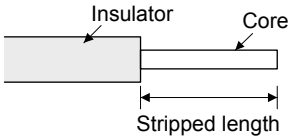

Twist strands lightly and straighten them as follows.

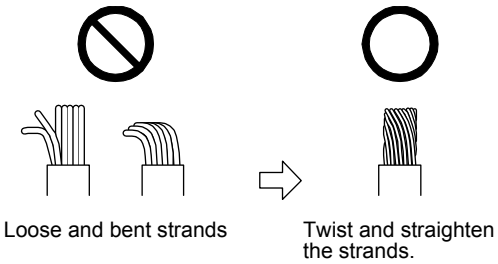

You can also use a ferrule to connect with the connectors. When using a ferrule, select a ferrule and crimping tool listed in the table below.

Servo amplifier	Wire size	Ferrule model (Phoenix Contact)		Crimping tool (Phoenix Contact)
		For one	For two	
MR-J4-10TM to MR-J4-100TM	AWG 16	AI1.5-10BK	AI-TWIN2×1.5-10BK	CRIMPFOX-ZA3
	AWG 14	AI2.5-10BU		
MR-J4-200TM to MR-J4-350TM	AWG 16	AI1.5-10BK	AI-TWIN2×1.5-10BK	
	AWG 14	AI2.5-10BU	AI-TWIN2×2.5-10BU	
	AWG 12	AI4-10GY		
MR-J4-60TM4 to MR-J4-350TM4	AWG 16	AI1.5-10BK	AI-TWIN2×1.5-10BK	
	AWG 14	AI2.5-10BU		
MR-J4-10TM1 to MR-J4-40TM1	AWG 16	AI1.5-10BK	AI-TWIN2×1.5-10BK	
	AWG 14	AI2.5-10BU		

(b) Inserting wire

Insert only one wire or ferrule to each wire insertion hole.

Insert the open tool as follows and push it down to open the spring. While the open tool is pushed down, insert the stripped wire into the wire insertion hole. Check the wire insertion depth, and make sure that the cable insulator will not be caught by the spring and that the conductive part of the stripped wire will not be exposed.

Release the open tool to fix the wire. Pull the wire lightly to confirm that the wire is surely connected. In addition, make sure that no conductor wire sticks out of the connector.

The following shows a connection example of the CNP3 connector for MR-J4-200TM and MR-J4-350TM.

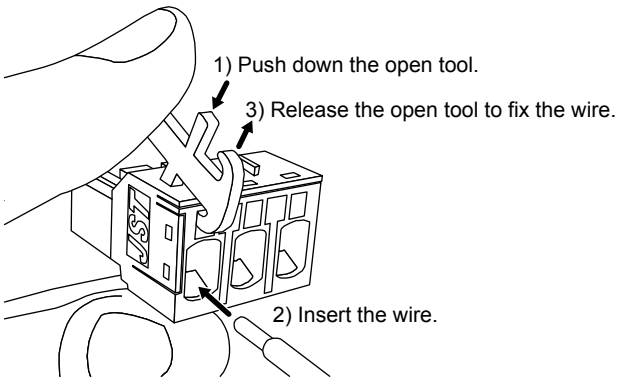

3.4 Connectors and pin assignment

POINT

- The pin assignment of the connectors is as viewed from the cable connector wiring section.
- For the STO I/O signal connector (CN8), refer to chapter 13.
- For the CN3 connector, securely connect the external conductor of the shielded cable to the ground plate and fix it to the connector shell.

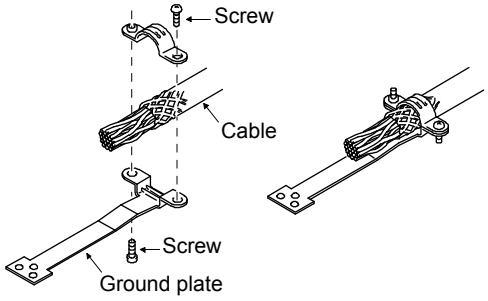

The servo amplifier front view shown is that of the MR-J4-60TM or less. Refer to chapter 9 DIMENSIONS for the appearances and connector layouts of the other servo amplifiers.

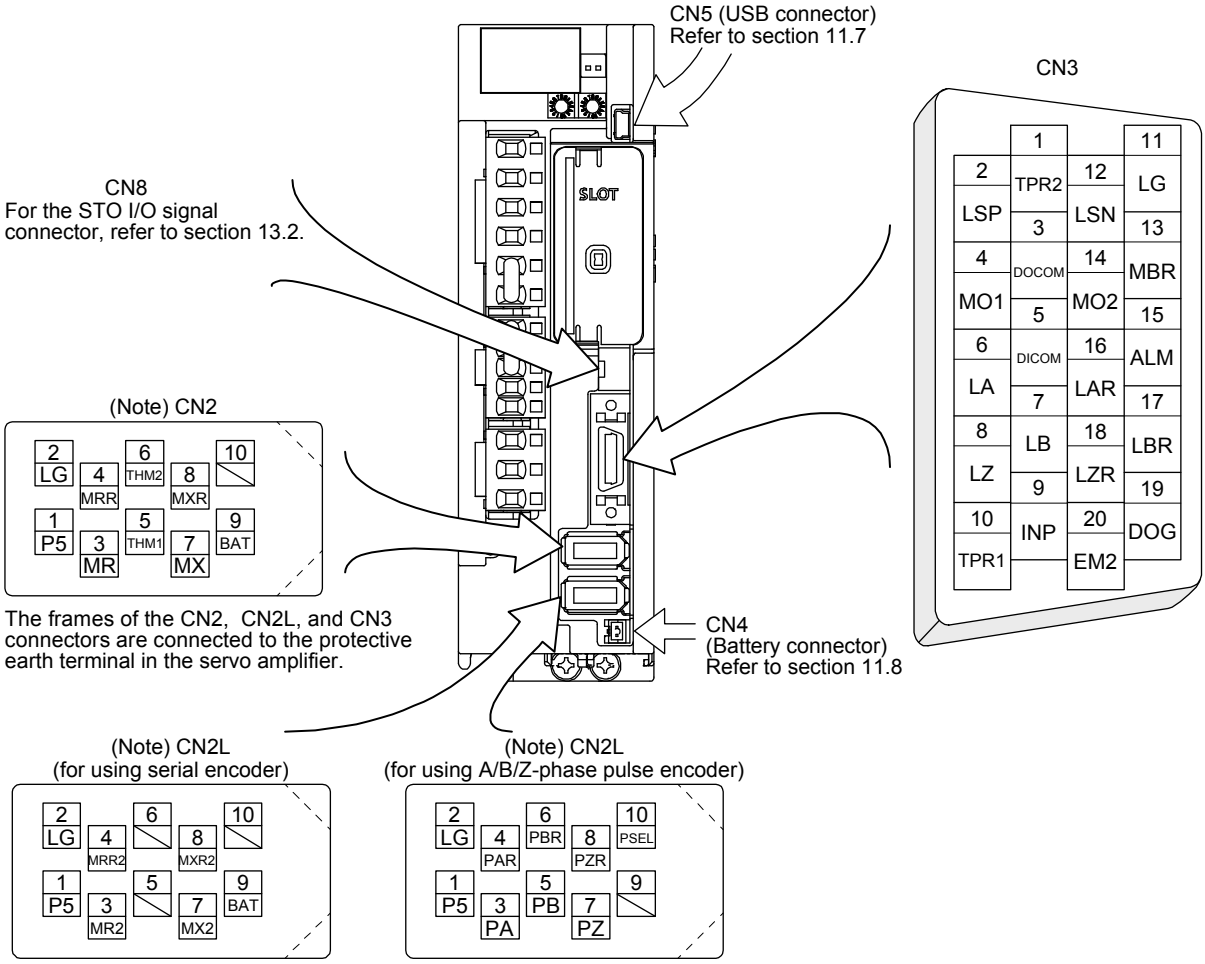

Note. This is a connector of 3M. Refer to table 1.1 for connections of external encoders.

3.5 Signal (device) explanations

For the I/O interfaces (symbols in I/O division column in the table), refer to section 3.8.2.
The pin numbers in the connector pin No. column are those in the initial status.

3.5.1 Input device

(1) Input device pin

The following shows the input device pins and parameters for setting devices.

Connector pin No.	Parameter	Initial device	I/O division
CN3-2	[Pr. PD03]	LSP	DI-1
CN3-12	[Pr. PD04]	LSN	
CN3-19	[Pr. PD05]	DOG	
CN3-10	[Pr. PD38]	TPR1	
CN3-20	[Pr. PA04]	EM2	

The on/off statuses of the pins can be read with "Digital inputs" of the object. "Digital inputs" is available with servo amplifiers with software version B2 or later. For details, refer to respective communication method manuals of "MR-J4-_TM_ Servo Amplifier Instruction Manual".

(2) Input device explanations

<table>
<tr><th>Device</th><th>Symbol</th><th>Connector pin No.</th><th>Function and application</th><th>I/O division</th></tr>
<tr><td>Forced stop 2</td><td>EM2</td><td>CN3-20</td><td>Turn off EM2 (open between commons) to decelerate the servo motor to a stop with commands.
Turn EM2 on (short between commons) in the forced stop state to reset that state.
Set [Pr. PA04] to "2 1 _ _" to disable EM2.
The following shows the setting of [Pr. PA04].
<table>
<tr><th>[Pr. PA04] setting</th><th>EM2/EM1</th><th colspan="2">Deceleration method</th></tr>
<tr><th></th><th></th><th>EM2 or EM1 is off</th><th>Alarm occurred</th></tr>
<tr><td>0 0 _ _</td><td>EM1</td><td>MBR (Electromagnetic brake interlock) turns off without the forced stop deceleration.</td><td>MBR (Electromagnetic brake interlock) turns off without the forced stop deceleration.</td></tr>
<tr><td>2 0 _ _</td><td>EM2</td><td>MBR (Electromagnetic brake interlock) turns off after the forced stop deceleration.</td><td>MBR (Electromagnetic brake interlock) turns off after the forced stop deceleration.</td></tr>
<tr><td>0 1 _ _</td><td>Not using EM2 and EM1</td><td></td><td>MBR (Electromagnetic brake interlock) turns off without the forced stop deceleration.</td></tr>
<tr><td>2 1 _ _</td><td>Not using EM2 and EM1</td><td></td><td>MBR (Electromagnetic brake interlock) turns off after the forced stop deceleration.</td></tr>
</table>
EM2 and EM1 are mutually exclusive.
EM2 has the same function as EM1 in the torque mode.</td><td>DI-1</td></tr>
<tr><td>Forced stop 1</td><td>EM1</td><td>(CN3-20)</td><td>When using EM1, set [Pr. PA04] to "0 0 _ _" to enable EM1.
When EM1 is turned off (open between commons), the base circuit shuts off, and the dynamic brake operates to decelerate the servo motor to a stop.
The forced stop will be reset when EM1 is turned on (short between commons).
Set [Pr. PA04] to "0 1 _ _" to disable EM1.</td><td>DI-1</td></tr>
</table>

<table>
<tr><th>Device</th><th>Symbol</th><th>Connector pin No.</th><th>Function and application</th><th>I/O division</th></tr>
<tr><td>Touch probe 1</td><td>TPR1</td><td>CN3-10</td><td rowspan="2">The touch probe function is available to latch the current position by sensor input. Turn it on to latch the current position. For the touch probe function, refer to respective communication method manuals of "MR-J4-_TM_ Servo Amplifier Instruction Manual".</td><td>DI-1</td></tr>
<tr><td>Touch probe 2</td><td>TPR2</td><td>CN3-1</td><td>DI-1</td></tr>
<tr><td>Operation start-up</td><td>ST</td><td>(CN3-10)</td><td>Use this device for the positioning function by the operation start-up signal.
For details, refer to respective communication method manuals of "MR-J4-_TM_ Servo Amplifier Instruction Manual".</td><td>DI-1</td></tr>
<tr><td>Forward rotation stroke end</td><td>LSP</td><td>CN3-2</td><td rowspan="2">To start the operation, turn on LSP and LSN. Turn it off to bring the servo motor to a slow stop and make it servo-locked.

<table>
<tr><th colspan="2">(Note) Input device</th><th colspan="2">Operation</th></tr>
<tr><th>LSP</th><th>LSN</th><th>CCW direction Positive direction</th><th>CW direction Negative direction</th></tr>
<tr><td>1</td><td>1</td><td>○</td><td>○</td></tr>
<tr><td>0</td><td>1</td><td></td><td>○</td></tr>
<tr><td>1</td><td>0</td><td>○</td><td></td></tr>
<tr><td>0</td><td>0</td><td></td><td></td></tr>
</table>
Note. 0: Off
1: On

Setting [Pr. PD01] as follows turn the signals on automatically (always connected) in the servo amplifier.

<table>
<tr><th rowspan="2">[Pr. PD01]</th><th colspan="2">Status</th></tr>
<tr><th>LSP</th><th>LSN</th></tr>
<tr><td>_ 4 _ _</td><td>Automatic on</td><td></td></tr>
<tr><td>_ 8 _ _</td><td></td><td>Automatic on</td></tr>
<tr><td>_ C _ _</td><td>Automatic on</td><td>Automatic on</td></tr>
</table>
When LSP or LSN is turned off, [AL. 99 Stroke limit warning] occurs.
In the torque mode, this device cannot be used during normal operation. It can be used during the magnetic pole detection in the linear servo motor control mode and the DD motor control mode. Also, when the magnetic pole detection in the torque mode is completed, this signal will be disabled.</td><td rowspan="2">DI-1</td></tr>
<tr><td>Reverse rotation stroke end</td><td>LSN</td><td>CN3-12</td></tr>
<tr><td>Proximity dog</td><td>DOG</td><td>CN3-19</td><td>Proximity dog at home position return will be detected. The polarity for dog detection can be changed with [Pr. PT29].

<table>
<tr><th rowspan="2">[Pr. PT29]</th><th colspan="2">Polarity for proximity dog detection</th></tr>
<tr><th>Profile mode
Cyclic synchronous mode
Point table method</th><th>Indexer method</th></tr>
<tr><td>_ _ _ 0</td><td>Dog detection with off</td><td>Dog detection with on</td></tr>
<tr><td>_ _ _ 1</td><td>Dog detection with on</td><td>Dog detection with off</td></tr>
</table></td><td>DI-1</td></tr>
</table>

Device	Symbol	Connector pin No.	Function and application	I/O division
Proportional control	PC		Turn PC on to switch the speed amplifier from the proportional integral type to the proportional type. If the servo motor at a stop is rotated even one pulse due to any external factor, it generates torque to compensate for a position shift. When the servo motor shaft is to be locked mechanically after positioning completion (stop), switching on the PC (Proportion control) upon positioning completion will suppress the unnecessary torque generated to compensate for a position shift. When the shaft is to be locked for a long time, switch on the PC (Proportion control) at the same time to make the torque less than the rated one. Do not use PC (Proportional control) in the torque mode. When PC (Proportional control) is used in the torque mode, operation may be performed at a speed exceeding the speed limit value.	DI-1
Gain switching	CDP		Turn on CDP to use the values of [Pr. PB29] to [Pr. PB36] and [Pr. PB56] to [Pr. PB60] as the load to motor inertia ratio and gain values.	DI-1
Fully closed loop selection	CLD		This is used when the semi closed loop control/fully closed loop control switching is enabled with [Pr. PE01]. Turn off CLD to select the semi closed loop control, and turn on CLD to select the fully closed loop control.	DI-1
General-purpose input A	DIA		When using input signals of the servo amplifier with a controller, use this device. This device is available with servo amplifiers with software version B2 or later.	DI-1
General-purpose input B	DIB			
General-purpose input C	DIC			

3.5.2 Output device

(1) Output device pin

The following shows the output device pins and parameters for assigning devices.

Connector pin No.	Parameter	Initial device	I/O division
CN3-13	[Pr. PD07]	MBR	DO-1
CN3-9	[Pr. PD08]	INP	
CN3-15	[Pr. PD09]	ALM	

(2) Output device explanations

Device	Symbol	Function and application
Electromagnetic brake interlock	MBR	When using the device, set operation delay time of the electromagnetic brake in [Pr. PC02]. When a servo-off status or alarm occurs, MBR will turn off.
Malfunction	ALM	When the protective circuit is activated to shut off the base circuit, ALM will turn off. When an alarm does not occur, ALM will turn on after 2.5 s to 3.5 s after power-on.
In-position	INP	When the number of droop pulses is in the in-position range, INP will turn on. The in-position range can be changed using [Pr. PA10]. When the in-position range is increased, INP may be on during low-speed rotation. The device cannot be used in the velocity mode and torque mode.
Dynamic brake interlock	DB	When using the signal, enable it by the setting of [Pr. PD07] to [Pr. PD09]. DB turns off when the dynamic brake needs to operate. When using the external dynamic brake on the servo amplifier of 11 kW or more, this device is required. (Refer to section 11.17.) For the servo amplifier of 7 kW or less, it is not necessary to use this device. The external dynamic brake cannot be used with 11 kW or more servo amplifier for compliance with SEMI-F47 standard. Do not assign DB (Dynamic brake interlock) in [Pr. PD07] to [Pr. PD09]. Failure to do so will cause the servo amplifier to become servo-off when an instantaneous power failure occurs.
Ready	RD	Enabling servo-on to make the servo amplifier ready to operate will turn on RD.
Speed reached	SA	SA will turn off during servo-off. When the servo motor speed reaches the following range, SA will turn on. Set speed ± ((Set speed × 0.05) + 20) r/min When the preset speed is 20 r/min or less, SA always turns on. The device cannot be used in the position mode and torque mode.

Device	Symbol	Function and application
Limiting speed	VLC	When the speed reaches the speed limit value in the torque mode, VLC will turn on. When the servo is off, TLC will be turned off. The device cannot be used in the position mode and velocity mode.
Zero speed detection	ZSP	ZSP turns on when the servo motor speed is zero speed (50 r/min) or less. Zero speed can be changed with [Pr. PC07]. 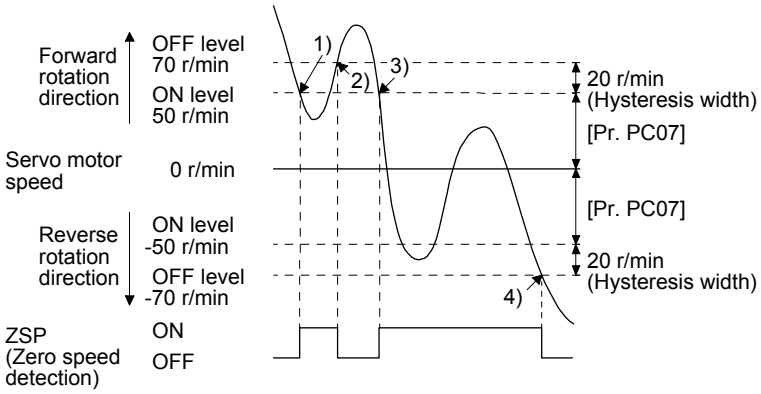 ZSP will turn on when the servo motor is decelerated to 50 r/min (at 1)), and will turn off when the servo motor is accelerated to 70 r/min again (at 2)). ZSP will turn on when the servo motor is decelerated again to 50 r/min (at 3)), and will turn off when the servo motor speed has reached -70 r/min (at 4)). The range from the point when the servo motor speed has reached on level, and ZSP turns on, to the point when it is accelerated again and has reached off level is called hysteresis width. Hysteresis width is 20 r/min for this servo amplifier. When you use a linear servo motor, [r/min] explained above will be [mm/s].
Limiting torque	TLC	When the torque reaches the torque limit value during torque generation, TLC will turn on. When the servo is off, TLC will be turned off. This device cannot be used in the torque mode.
Warning	WNG	When warning has occurred, WNG turns on. When a warning is not occurring, WNG will turn off in 2.5 s to 3.5 s after power-on.
Battery warning	BWNG	BWNG turns on when [AL. 92 Battery cable disconnection warning] or [AL. 9F Battery warning] has occurred. When the battery warning is not occurring, BWNG will turn off in 2.5 s to 3.5 s after power-on.
Variable gain selection	CDPS	CDPS will turn on during variable gain.
Absolute position undetermined	ABSV	ABSV turns on when the absolute position is undetermined. The device cannot be used in the velocity mode and torque mode.
During tough drive	MTTR	When a tough drive is enabled in [Pr. PA20], activating the instantaneous power failure tough drive will turn on MTTR.
During fully closed loop control	CLDS	CLDS turns on during fully closed loop control.
General-purpose output A	DOA	The pins to which this device is assigned can be switched on/off with "Digital outputs" of the object. For details, refer to respective communication method manuals of "MR-J4-_TM_ Servo Amplifier Instruction Manual". This device is available with servo amplifiers with software version B2 or later.
General-purpose output B	DOB	
General-purpose output C	DOC	

3.5.3 Output signal

Signal name	Symbol	Connector pin No.	Function and application
Encoder A-phase pulse (differential line driver)	LA LAR	CN3-6 CN3-16	These devices output pulses of encoder output set in [Pr. PA15] and [Pr. PA16] in the differential line driver type. In CCW rotation of the servo motor, the encoder B-phase pulse lags the encoder A-phase pulse by a phase angle of π/2. The relation between rotation direction and phase difference of the A-phase and B-phase pulses can be changed with [Pr. PC03]. Output pulse specification, dividing ratio setting, and electronic gear setting can be selected.
Encoder B-phase pulse (differential line driver)	LB LBR	CN3-7 CN3-17	
Encoder Z-phase pulse (differential line driver)	LZ LZR	CN3-8 CN3-18	The encoder zero-point signal is output in the differential line driver type. One pulse is output per servo motor revolution. This turns on when the zero-point position is reached. (negative logic) The minimum pulse width is about 400 μs. For home position return using this pulse, set the creep speed to 100 r/min or less.
Analog monitor 1	MO1	CN3-4	This is used to output the data set in [Pr. PC09] to between MO1 and LG in terms of voltage. Resolution: 10 bits or equivalent
Analog monitor 2	MO2	CN3-14	This signal output the data set in [Pr. PC10] to between MO2 and LG in terms of voltage. Resolution: 10 bits or equivalent

3.5.4 Power supply

Signal name	Symbol	Connector pin No.	Function and application
Digital I/F power supply input	DICOM	CN3-5	Input 24 V DC (24 V DC ± 10% 300 mA) for I/O interface. The power supply capacity changes depending on the number of I/O interface points to be used. For sink interface, connect + of 24 V DC external power supply. For source interface, connect - of 24 V DC external power supply.
Digital I/F common	DOCOM	CN3-3	Common terminal of input signal such as EM2 of the servo amplifier. This is separated from LG. For sink interface, connect - of 24 V DC external power supply. For source interface, connect + of 24 V DC external power supply.
Monitor common	LG	CN3-11	Common terminal of MO1 and MO2.
Shield	SD	Plate	Connect the external conductor of the shielded wire.

3.6 Forced stop deceleration function

POINT

- When alarms not related to the forced stop function occur, control of motor deceleration cannot be guaranteed. (Refer to chapter 8.)
- When network communication is shut-off, forced stop deceleration will operate. (Refer to section 3.7.1 (3).)
- In the torque mode, the forced stop deceleration function is not available.
- Disable the forced stop deceleration function for a machine in which multiple axes are connected together, such as a tandem structure. If an alarm occurs with the forced stop deceleration function disabled, the servo motor will stop with the dynamic brake.

3.6.1 Forced stop deceleration function

When EM2 is turned off, dynamic brake will start to stop the servo motor after forced stop deceleration. During this sequence, the display shows [AL. E6 Servo forced stop warning].
During normal operation, do not use EM2 (Forced stop 2) to alternate stop and drive. The servo amplifier life may be shortened.

(1) Connection diagram

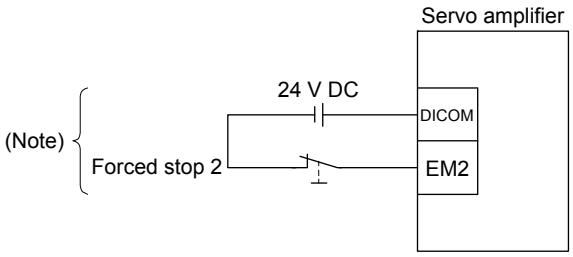

Note. This diagram shows sink I/O interface. For source I/O interface, refer to section 3.8.3.

(2) Timing chart

When EM2 (Forced stop 2) is turned off, the motor will decelerate according to [Pr. PC24 Forced stop deceleration time constant]. Once the motor speed is below [Pr. PC07 Zero speed], base power is cut and the dynamic brake activates.

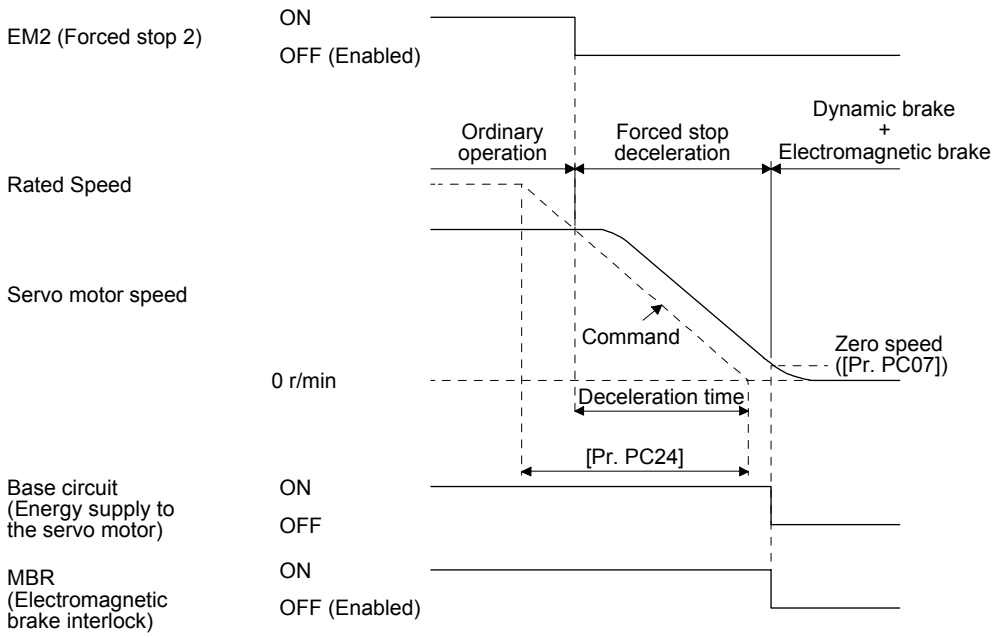

3.6.2 Base circuit shut-off delay time function

The base circuit shut-off delay time function is used to prevent vertical axis from dropping at a forced stop (EM2 goes off), alarm occurrence, or network communication shut-off due to delay time of the electromagnetic brake. Set the time from MBR (Electromagnetic brake interlock) off to base circuit shut-off with [Pr. PC02].

(1) Timing chart

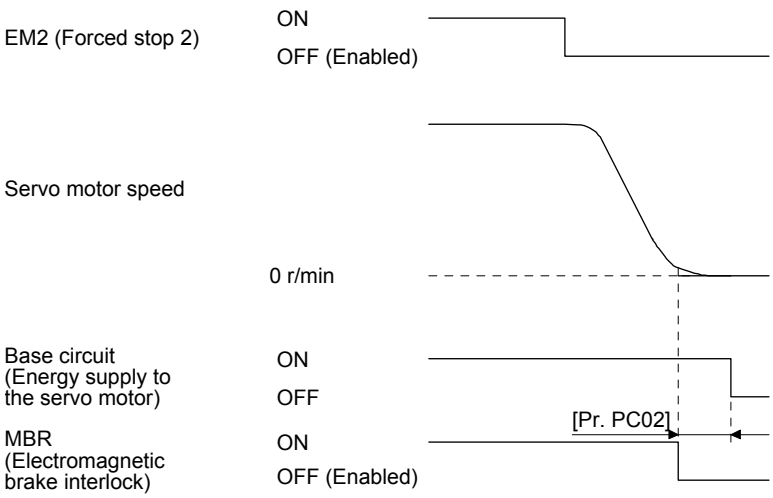

When EM2 (Forced stop 2) turns off or an alarm occurs during driving, the servo motor will decelerate based on the deceleration time constant. MBR (Electromagnetic brake interlock) will turn off, and then after the delay time set in [Pr. PC02], the servo amplifier will be base circuit shut-off status.

(2) Adjustment

While the servo motor is stopped, turn off EM2 (Forced stop 2), adjust the base circuit shut-off delay time in [Pr. PC02], and set the value to approximately 1.5 times of the smallest delay time in which the servo motor shaft does not freefall.

3.6.3 Vertical axis freefall prevention function

The vertical axis freefall prevention function avoids machine damage by pulling up the shaft slightly like the following case.
When the servo motor is used for operating vertical axis, the servo motor electromagnetic brake and the base circuit shut-off delay time function avoid dropping axis at forced stop. However, the functions may not avoid dropping axis a few μm due to the backlash of the servo motor electromagnetic brake.
The vertical axis freefall prevention function is enabled with the following conditions.

- Other than "0" is set to [Pr. PC31 Vertical axis freefall prevention compensation amount].
- EM2 (Forced stop 2) turned off, an alarm occurred, or network communication shut-off occurred while the servo motor speed is zero speed or less.
- The base circuit shut-off delay time function is enabled.

(1) Timing chart

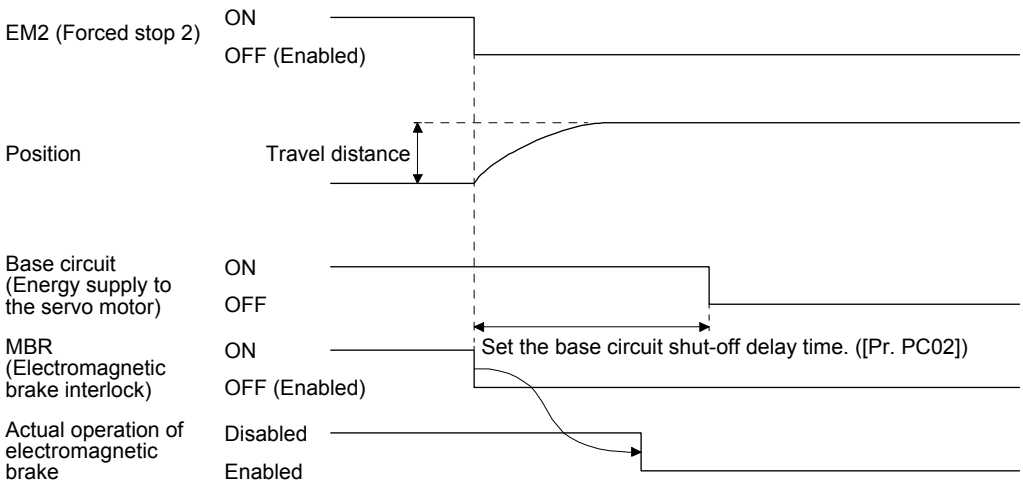

(2) Adjustment

- Set the freefall prevention compensation amount in [Pr. PC31].
- While the servo motor is stopped, turn off the EM2 (Forced stop 2). Adjust the base circuit shut-off delay time in [Pr. PC02] in accordance with the travel distance ([Pr. PC31). Adjust it considering the freefall prevention compensation amount by checking the servo motor speed, torque ripple, etc.

3.6.4 Residual risks of the forced stop function (EM2)

(1) The forced stop function is not available for alarms that activate the dynamic brake when the alarms occur.

(2) When an alarm that activates the dynamic brake during forced stop deceleration occurs, the braking distance until the servo motor stops will be longer than that of normal forced stop deceleration without the dynamic brake.

(3) If STO is turned off during forced stop deceleration, [AL. 63 STO timing error] will occur.

3.7 Alarm occurrence timing chart

⚠CAUTION	●When an alarm has occurred, remove its cause, make sure that the operation signal is not being input, ensure safety, and reset the alarm before restarting operation.

POINT

●In the torque mode, the forced stop deceleration function is not available.

To deactivate the alarm, cycle the control circuit power, give the error reset command from the controller, or perform network communication reset. However, the alarm cannot be deactivated unless its cause is removed.

3.7.1 When you use the forced stop deceleration function

POINT

●To enable the function, set "2 _ _ _ (initial value)" in [Pr. PA04].

●Disable the forced stop deceleration function for a machine in which multiple axes are connected together, such as a tandem structure. If an alarm occurs with the forced stop deceleration function disabled, the servo motor will stop with the dynamic brake.

(1) When the forced stop deceleration function is enabled

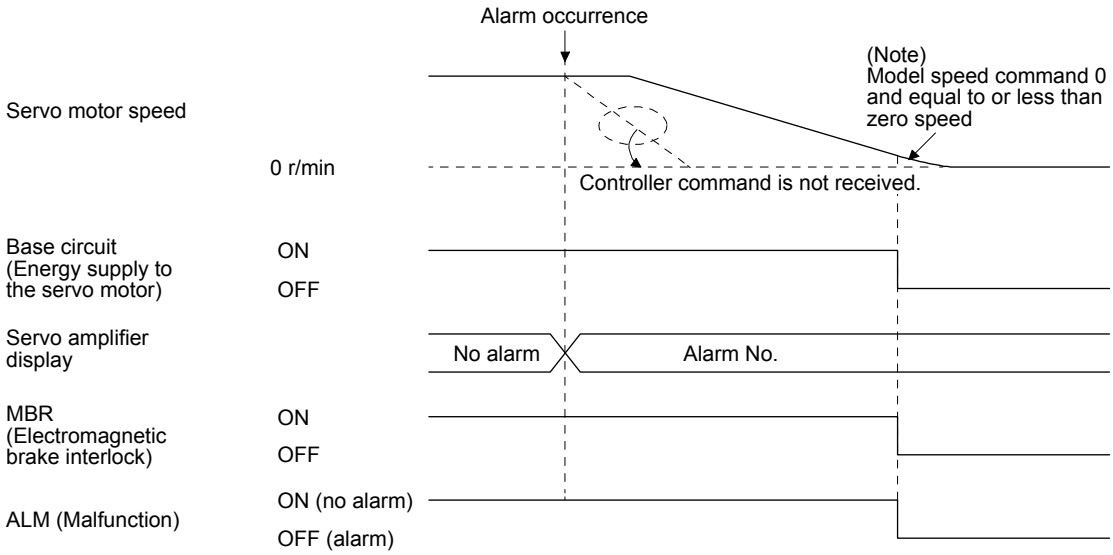

Note. The model speed command is a speed command generated in the servo amplifier for forced stop deceleration of the servo motor.

(2) When the forced stop deceleration function is not enabled

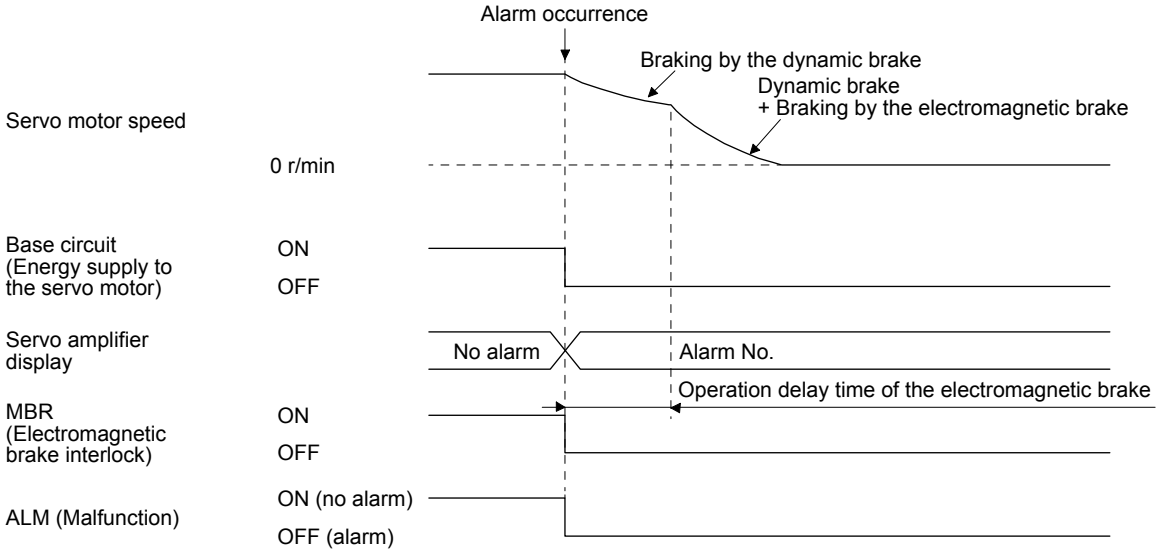

(3) When network communication is shut-off
The dynamic brake may operate depending on the communication shut-off status.

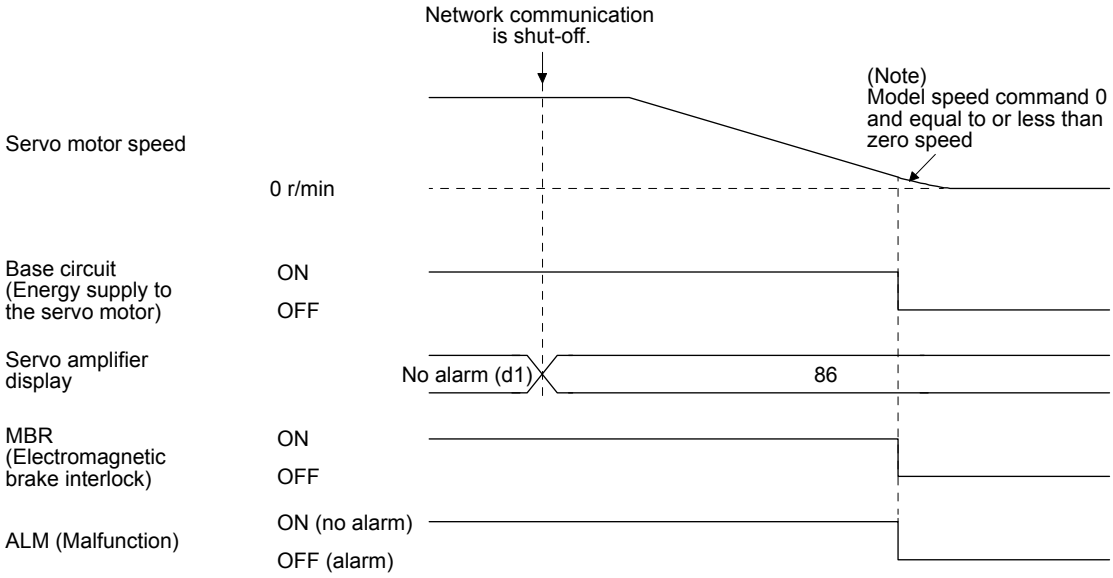

Note. The model speed command is a speed command generated in the servo amplifier for forced stop deceleration of the servo motor.

3.7.2 When you do not use the forced stop deceleration function

POINT
●To disable the function, set "0 _ _ _" in [Pr. PA04].

The timing chart that shows the servo motor condition when an alarm or network communication shut-off occurs is the same as section 3.7.1 (2).

3.8 Interfaces

3.8.1 Internal connection diagram

POINT
●Refer to section 13.3.1 for the CN8 connector.

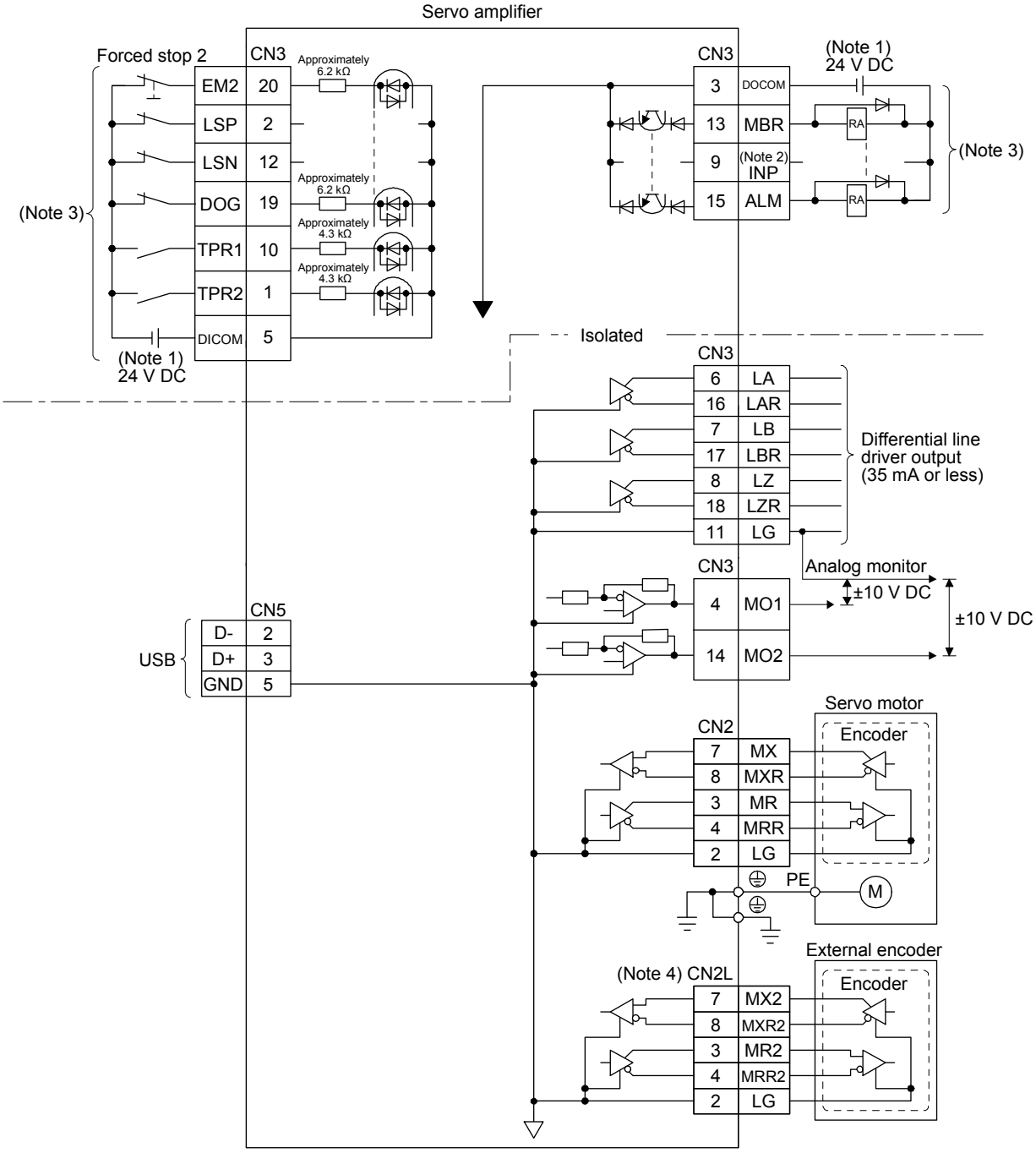

Note 1. The illustration of the 24 V DC power supply is divided between input signal and output signal for convenience. However, they can be configured by one.
2. The signal cannot be used in the velocity mode and torque mode.
3. This diagram shows sink I/O interface. For source I/O interface, refer to section 3.8.3.
4. Refer to table 1.1 for connections of external encoders.

3.8.2 Detailed explanation of interfaces

This section provides the details of the I/O signal interfaces (refer to the I/O division in the table) given in section 3.5. Refer to this section and make connection with the external device.

(1) Digital input interface DI-1

This is an input circuit whose photocoupler cathode side is input terminal. Transmit signals from sink (open-collector) type transistor output, relay switch, etc. The following is a connection diagram for sink input. Refer to section 3.8.3 for source input.

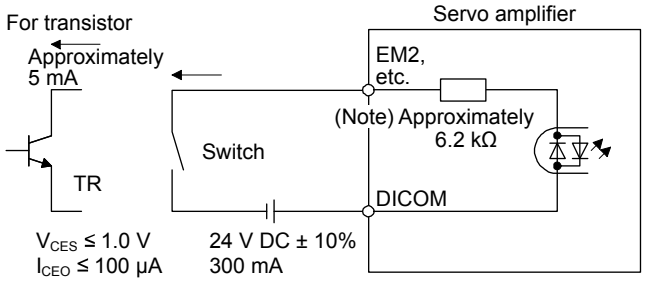

Note. It will be approximately 4.3 kΩ for interface of CN3-1 and CN3-10 pins.

(2) Digital output interface DO-1

This is a circuit in which the collector of the output transistor is the output terminal. When the output transistor is turned on, the current will flow to the collector terminal.

A lamp, relay or photocoupler can be driven. Install a diode (D) for an inductive load, or install an inrush current suppressing resistor (R) for a lamp load.

(Rated current: 40 mA or less, maximum current: 50 mA or less, inrush current: 100 mA or less) A maximum of 2.6 V voltage drop occurs in the servo amplifier.

The following shows a connection diagram for sink output. Refer to section 3.8.3 for source output.

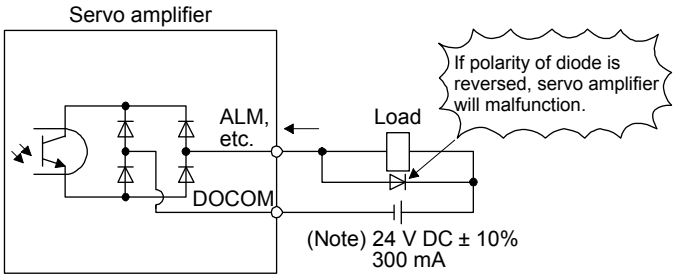

Note. If the voltage drop (maximum of 2.6 V) interferes with the relay operation, apply high voltage (maximum of 26.4 V) from external source.

(3) Encoder output pulses DO-2 (differential line driver type)

(a) Interface

Maximum output current: 35 mA

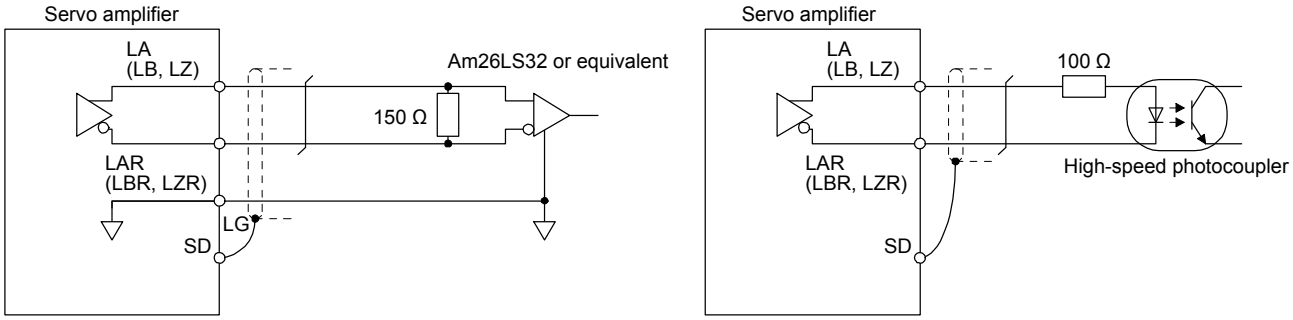

(b) Output pulse

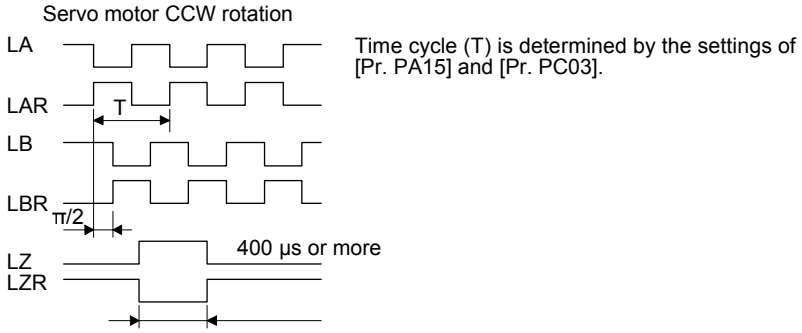

(4) Analog output

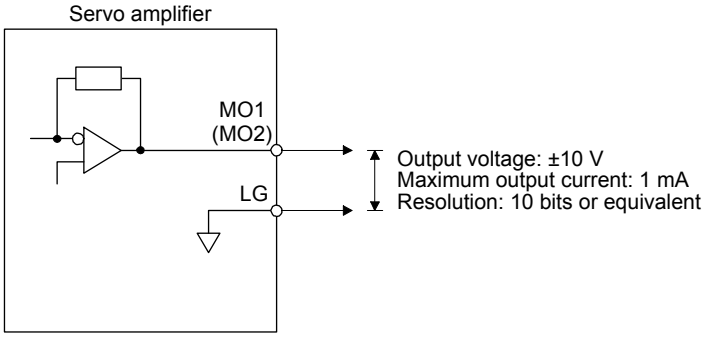

Note. Output voltage range varies depending on the output contents.

3.8.3 Source I/O interfaces

In this servo amplifier, source type I/O interfaces can be used.

(1) Digital input interface DI-1
This is an input circuit whose photocoupler anode side is input terminal. Transmit signals from source (open-collector) type transistor output, relay switch, etc.

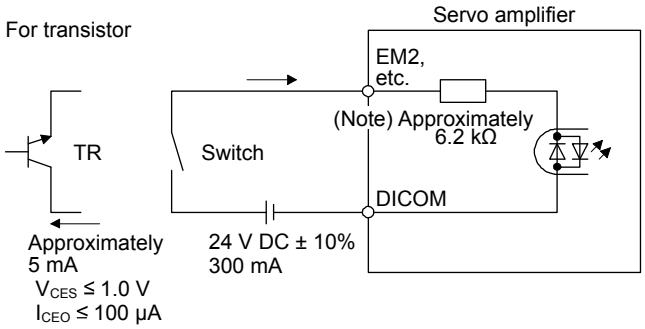

Note. It will be approximately 4.3 kΩ for interface of CN3-1 and CN3-10 pins.

(2) Digital output interface DO-1
This is a circuit in which the emitter of the output transistor is the output terminal. When the output transistor is turned on, the current will flow from the output terminal to a load.
A maximum of 2.6 V voltage drop occurs in the servo amplifier.

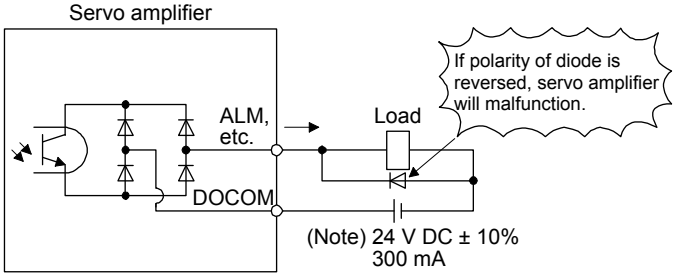

Note. If the voltage drop (maximum of 2.6 V) interferes with the relay operation, apply high voltage (maximum of 26.4 V) from external source.

3.9 Servo motor with an electromagnetic brake

3.9.1 Safety precautions

●Configure an electromagnetic brake circuit which is interlocked with an external emergency stop switch.

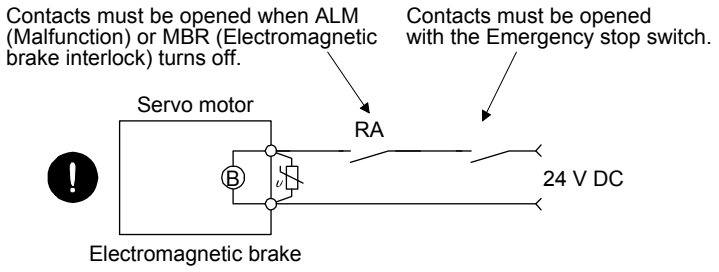

⚠CAUTION

●The electromagnetic brake is provided for holding purpose and must not be used for ordinary braking.

●Before operating the servo motor, be sure to confirm that the electromagnetic brake operates properly.

●Do not use the 24 V DC interface power supply for the electromagnetic brake. Always use the power supply designed exclusively for the electromagnetic brake. Otherwise, it may cause a malfunction.

●When using EM2 (Forced stop 2), use MBR (Electromagnetic brake interlock) for operating the electromagnetic brake. Operating the electromagnetic brake without using MBR during deceleration to a stop will saturate servo motor torques at the maximum value due to brake torque of the electromagnetic brake. This can result in delay of the deceleration to a stop from a set value.

POINT

●Refer to "Servo Motor Instruction Manual (Vol. 3)" for specifications such as the power supply capacity and operation delay time of the electromagnetic brake.

●Refer to "Servo Motor Instruction Manual (Vol. 3)" for the selection of a surge absorber for the electromagnetic brake.

Note the following when the servo motor with an electromagnetic brake is used.

1) The brake will operate when the power (24 V DC) turns off.

2) Turn off the servo-on command after the servo motor stopped.

(1) Connection diagram

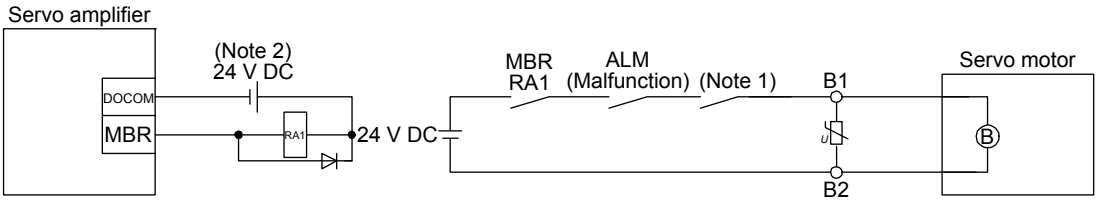

Note 1. Create the circuit in order to shut off by interlocking with the emergency stop switch.
2. Do not use the 24 V DC interface power supply for the electromagnetic brake.

(2) Setting

In [Pr. PC02 Electromagnetic brake sequence output], set a delay time (Tb) from MBR (Electromagnetic brake interlock) off to base circuit shut-off at a servo-off as in the timing chart in section 3.9.2.

3.9.2 Timing chart

(1) When you use the forced stop deceleration function

POINT
●To enable the function, set "2 _ _ _ (initial value)" in [Pr. PA04].

(a) Servo-on command (from controller) on/off

When servo-on command is turned off, the servo lock will be released after Tb [ms], and the servo motor will coast. If the electromagnetic brake is enabled during servo-lock, the brake life may be shorter. Therefore, set Tb about 1.5 times of the minimum delay time where the moving part will not drop down for a vertical axis system, etc.

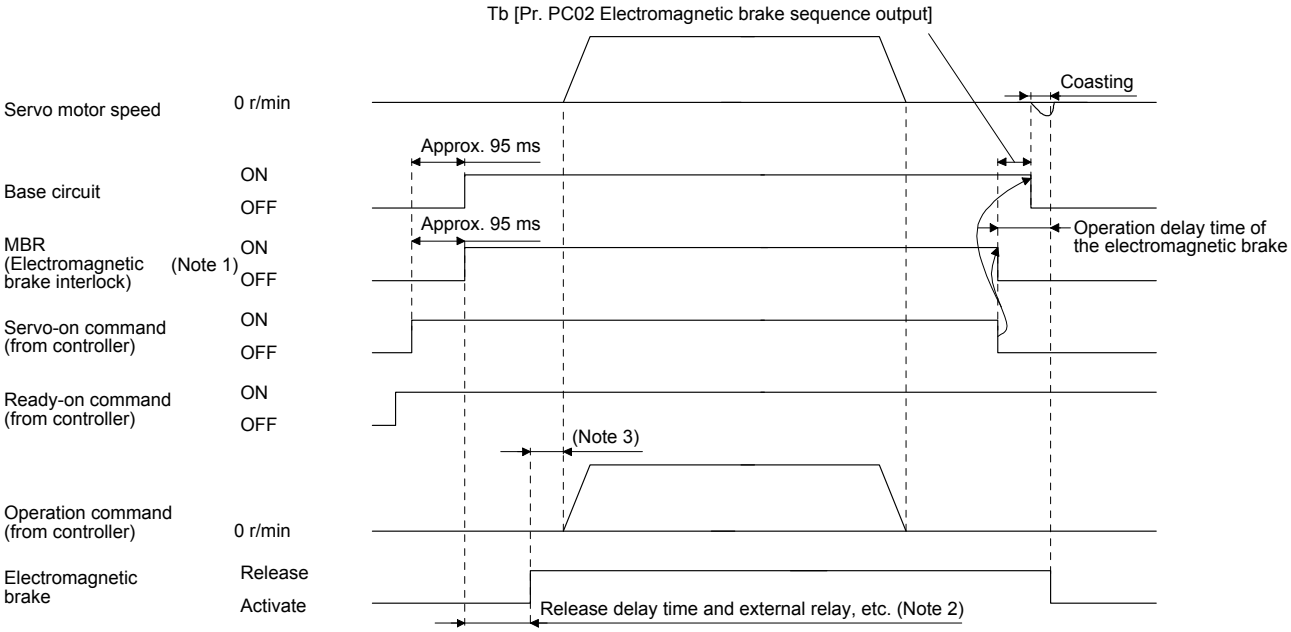

Note 1. ON: Electromagnetic brake is not activated.
OFF: Electromagnetic brake is activated.
2. Electromagnetic brake is released after delaying for the release delay time of electromagnetic brake and operation time of external circuit relay. For the release delay time of electromagnetic brake, refer to "Servo Motor Instruction Manual (Vol. 3)".
3. Give the operation command from the controller after the electromagnetic brake is released.

(b) Off/on of the sudden stop command (from controller) or EM2 (Forced stop 2)

> POINT
>
> ●In the torque mode, the forced stop deceleration function is not available.

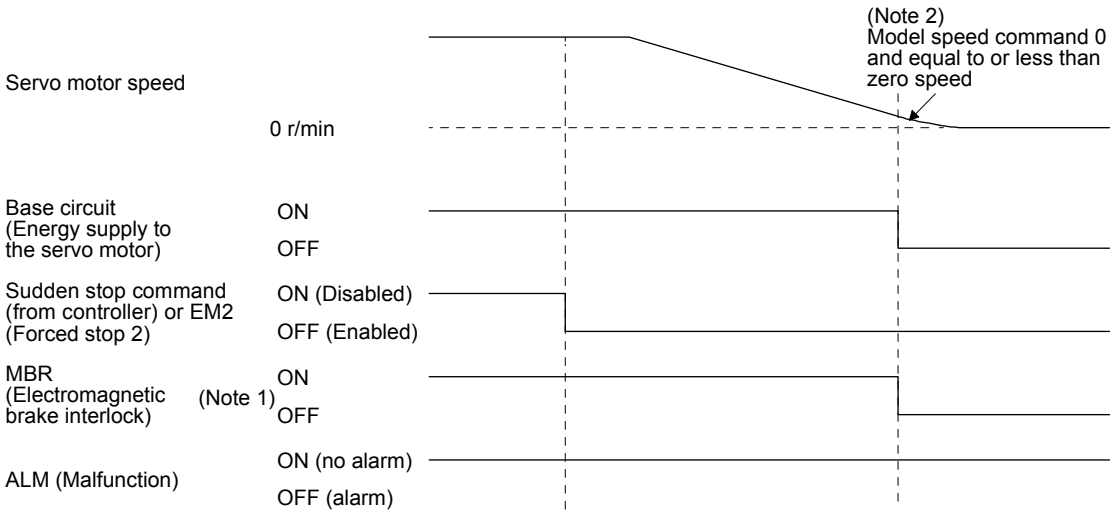

Note 1. ON: Electromagnetic brake is not activated.
OFF: Electromagnetic brake is activated.
2. The model speed command is a speed command generated in the servo amplifier for forced stop deceleration of the servo motor.

(c) Alarm occurrence

The operation status during an alarm is the same as section 3.7.

(d) Both main and control circuit power supplies off

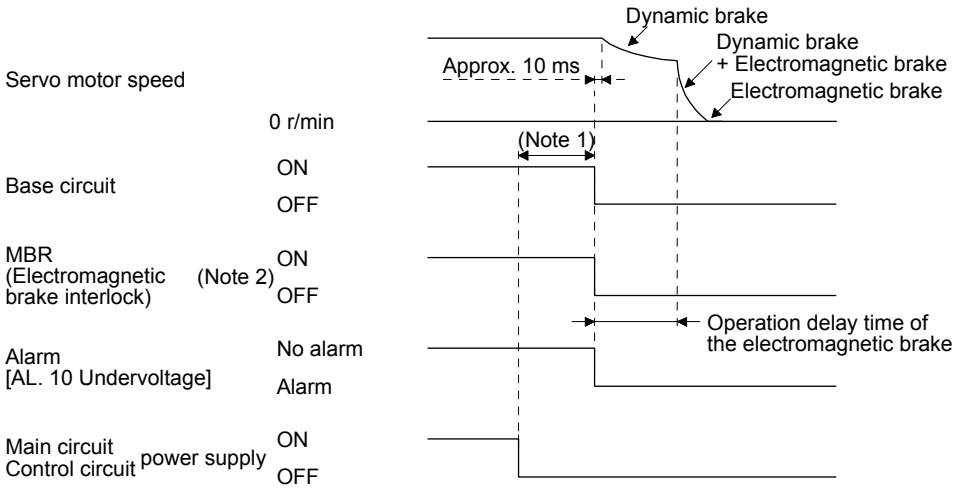

Note 1. Variable according to the operation status.
2. ON: Electromagnetic brake is not activated.
OFF: Electromagnetic brake is activated.

(e) Main circuit power supply off during control circuit power supply on

POINT
●In the torque mode, the forced stop deceleration function is not available.

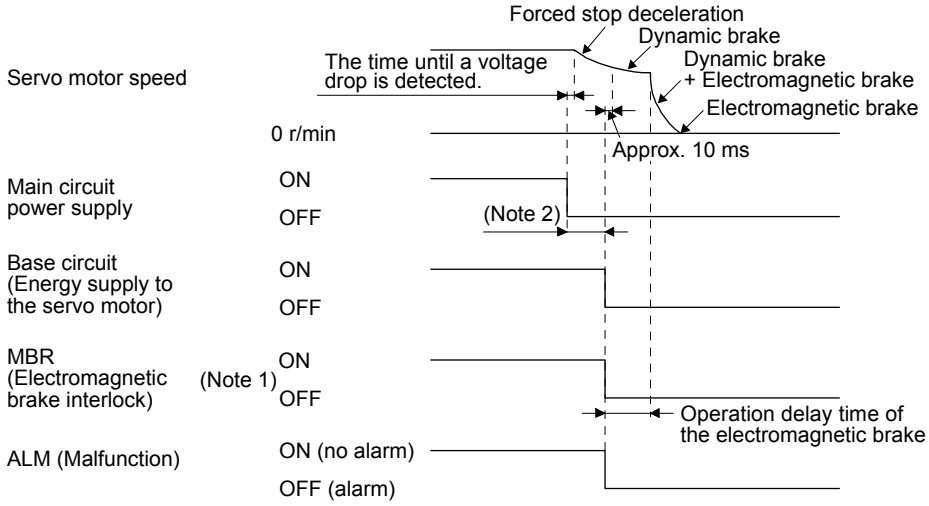

Note 1. ON: Electromagnetic brake is not activated.
OFF: Electromagnetic brake is activated.
2. Variable according to the operation status.

(f) Ready-off command from controller

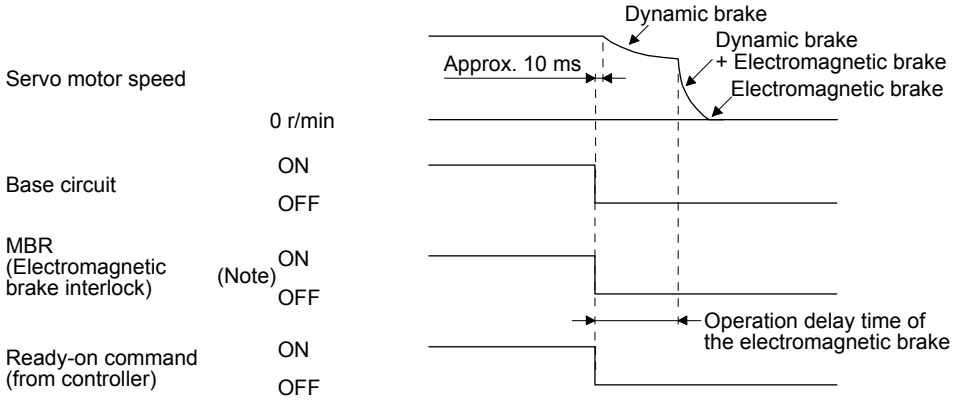

Note. ON: Electromagnetic brake is not activated.
OFF: Electromagnetic brake is activated.

(2) When you do not use the forced stop deceleration function

POINT
●To disable the function, set "0 _ _ _" in [Pr. PA04].

(a) Servo-on command (from controller) on/off
It is the same as (1) (a) in this section.

(b) Off/on of the sudden stop command (from controller) or EM1 (Forced stop 1)

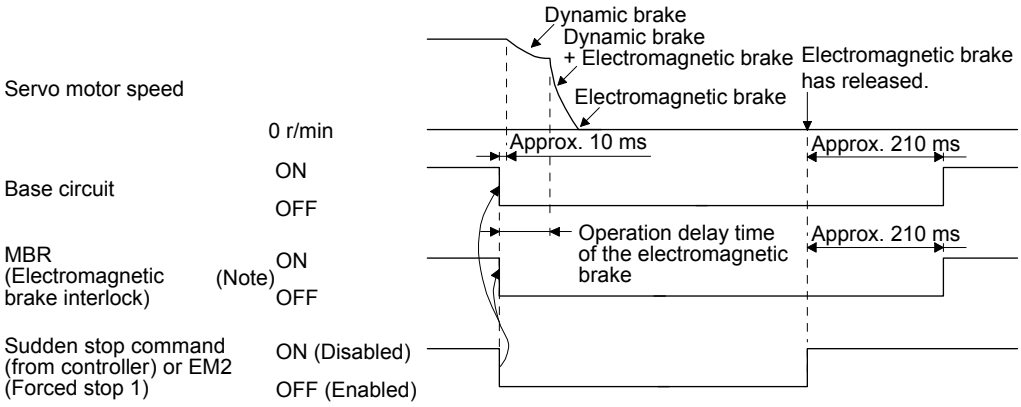

Note. ON: Electromagnetic brake is not activated.
OFF: Electromagnetic brake is activated.

(c) Alarm occurrence
The operation status during an alarm is the same as section 3.7.

(d) Both main and control circuit power supplies off
It is the same as (1) (d) in this section.

(e) Main circuit power supply off during control circuit power supply on

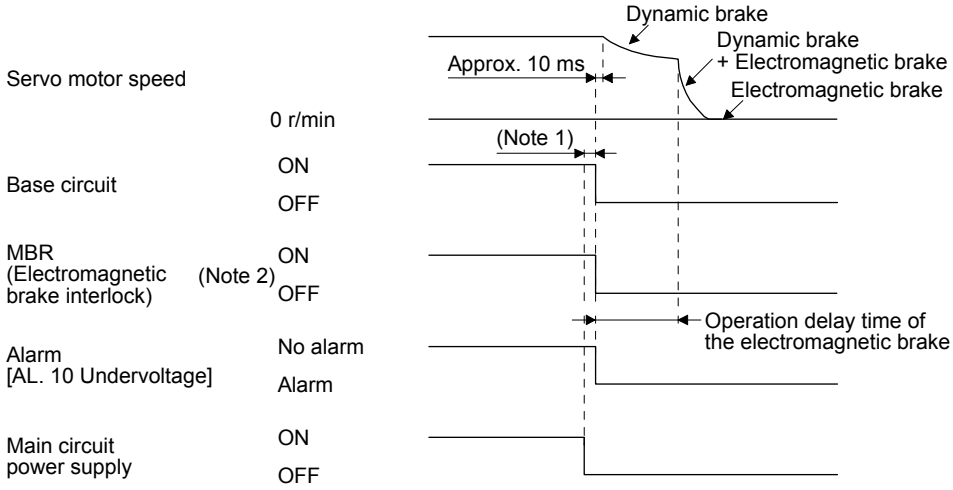

Note 1. Variable according to the operation status.
2. ON: Electromagnetic brake is not activated.
OFF: Electromagnetic brake is activated.

(f) Ready-off command from controller
It is the same as (1) (f) in this section.

3.10 Grounding

⚠WARNING
- Ground the servo amplifier and servo motor securely.
- To prevent an electric shock, always connect the protective earth (PE) terminal (marked ⏚) of the servo amplifier to the protective earth (PE) of the cabinet.

The servo amplifier switches the power transistor on-off to supply power to the servo motor. Depending on the wiring and ground cable routing, the servo amplifier may be affected by the switching noise (due to di/dt and dv/dt) of the transistor. To prevent such a fault, refer to the following diagram and always ground.
To conform to the EMC Directive, refer to "EMC Installation Guidelines".

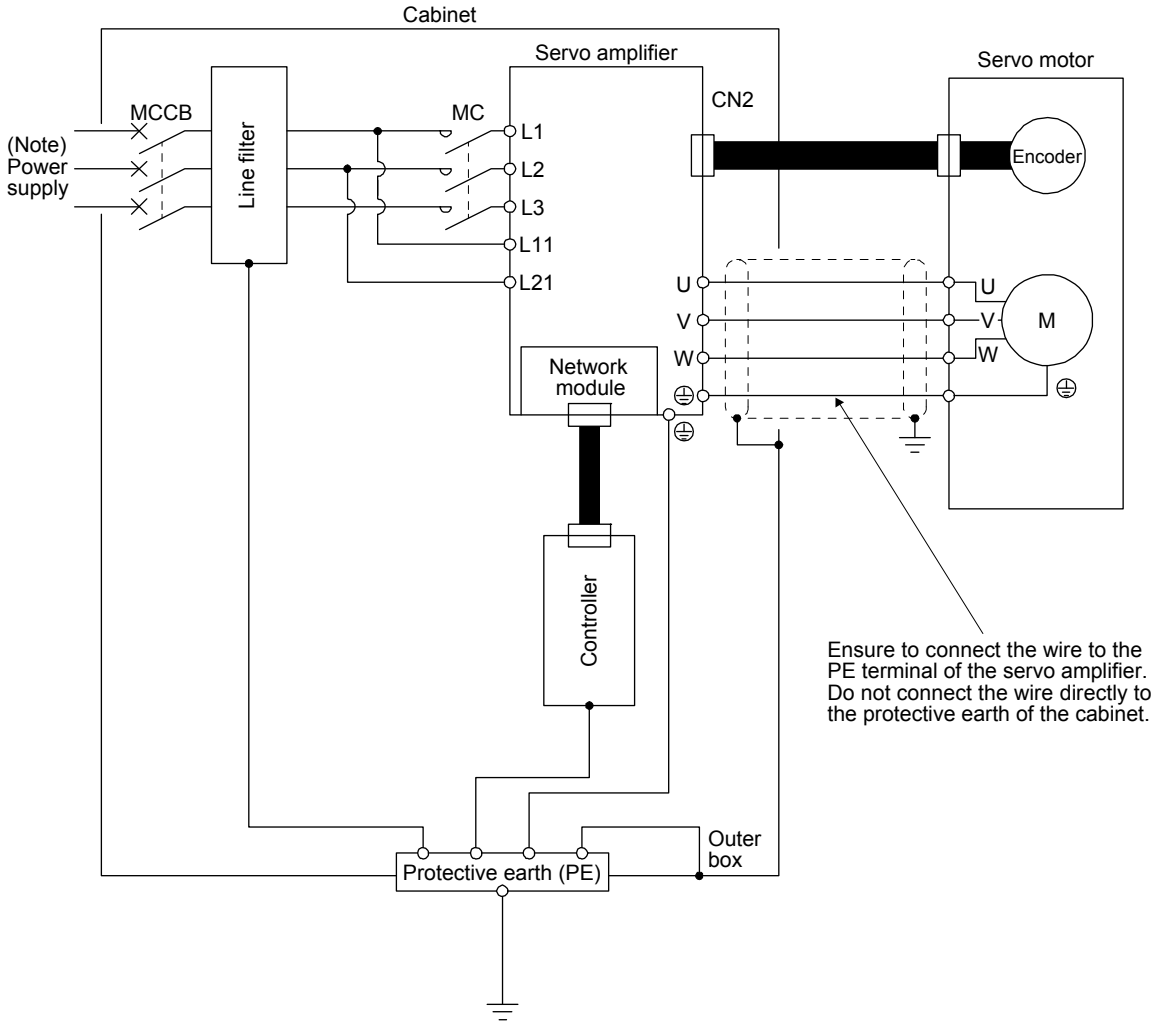

Note. For the power supply specifications, refer to section 1.3.

MEMO

4. STARTUP

⚠WARNING	●When executing a test run, follow the notice and procedures in this instruction manual. Otherwise, it may cause a malfunction, damage to the machine, or injury. ●Do not operate the switches with wet hands. Otherwise, it may cause an electric shock.

⚠CAUTION	●Before starting operation, check the parameters. Improper settings may cause some machines to operate unexpectedly. ●The servo amplifier heat sink, regenerative resistor, servo motor, etc., may be hot while the power is on and for some time after power-off. Take safety measures such as providing covers to avoid accidentally touching them by hands and parts such as cables. ●During operation, never touch the rotor of the servo motor. Otherwise, it may cause injury. ●Before wiring, switch operation, etc., eliminate static electricity. Otherwise, it may cause a malfunction.

POINT

●When you use a linear servo motor, replace the following words in the left to the words in the right.

Load to motor inertia ratio	→ Load to motor mass ratio
Torque	→ Thrust

4. STARTUP

4.1 Switching power on for the first time

POINT
●When using the servo amplifier in the point table method, refer to section 18.2. ●When using the servo amplifier in the indexer method, refer to section 19.2.

When switching power on for the first time, follow this section to make a startup.

4.1.1 Startup procedure

Wiring check	Check whether the servo amplifier and servo motor are wired correctly using visual inspection, DO forced output function (section 4.5.1), etc. (Refer to section 4.1.2.)
Surrounding environment check	Check the surrounding environment of the servo amplifier and servo motor. (Refer to section 4.1.3.)
Parameter setting	Set the parameters as necessary, such as the used operation mode and regenerative option selection. (Refer to chapter 5.)
Test operation of the servo motor alone in test operation mode	For the test operation, with the servo motor disconnected from the machine and operated at the speed as low as possible, check whether the servo motor rotates correctly. (Refer to section 4.5.)
Network setting check	Check the network setting to connect the controller. For the network setting, refer to respective communication method manuals of "MR-J4-_TM_ Servo Amplifier Instruction Manual".
Test operation of the servo motor alone by commands	For the test operation with the servo motor disconnected from the machine and operated at the speed as low as possible, give commands to the servo amplifier and check whether the servo motor rotates correctly.
Test operation with the servo motor and machine connected	After connecting the servo motor with the machine, check machine motions with sending operation commands from the controller.
Gain adjustment	Make gain adjustment to optimize the machine motions. (Refer to chapter 6.)
Actual operation	
Stop	Stop giving commands and stop operation.

4.1.2 Wiring check

(1) Power supply system wiring
Before switching on the main circuit and control circuit power supplies, check the following items.

(a) Power supply system wiring
1) The power supplied to the power input terminals (L1/L2/L3/L11/L21) of the servo amplifier should satisfy the defined specifications. (Refer to section 1.3.)

2) When the power factor improving DC reactor is not used, between P3 and P4 should be connected.

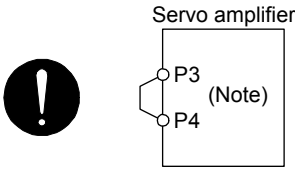

Note. The 100 V class servo amplifiers do not have P3 and P4.

(b) Connection of servo amplifier and servo motor
1) The servo amplifier power output (U/V/W) should match in phase with the servo motor power input terminals (U/V/W).

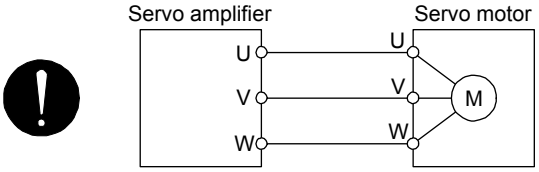

2) The power supplied to the servo amplifier should not be connected to the servo motor power terminals (U/V/W). Doing so will fail the servo amplifier and servo motor.

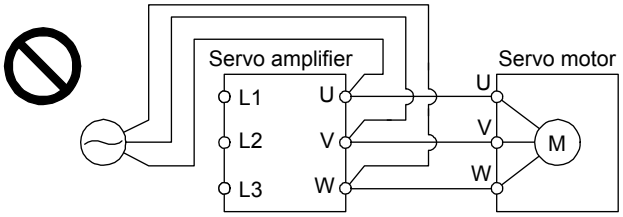

3) The grounding terminal of the servo motor is connected to the PE terminal of the servo amplifier.

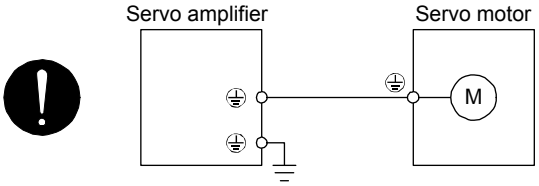

4) The CN2 connector of the servo amplifier should be connected to the encoder of the servo motor securely using the encoder cable.

(c) When you use an option and auxiliary equipment

1) 200 V class

a) When you use a regenerative option for 5 kW or less servo amplifiers

- The lead wire between P+ terminal and D terminal should not be connected.
- The regenerative option wire should be connected between P+ and C terminal.
- Twisted wires should be used. (Refer to section 11.2.4.)

b) When you use a regenerative option for 7 kW or more servo amplifiers

- For 7 kW servo amplifiers, the lead wire of the built-in regenerative resistor connected to P+ terminal and C terminal should not be connected.
- The regenerative option wire should be connected between P+ and C terminal.
- Twisted wires should be used. (Refer to section 11.2.4.)

c) When you use a brake unit and power regeneration converter for 5 kW or more servo amplifiers

- For 5 kW or less servo amplifiers, the lead wire between P+ terminal and D terminal should not be connected.
- For 7 kW servo amplifiers, the lead wire of the built-in regenerative resistor connected to P+ terminal and C terminal should not be connected.
- Brake unit, power regeneration converter should be connected to P+ terminal and N- terminal. (Refer to section 11.3 and 11.4.)
- Twisted wires should be used when wiring is over 5 m and equal to or less than 10 m using a brake unit. (Refer to section 11.3)

d) When you use a power regeneration common converter

- For 5 kW or less servo amplifiers, the lead wire between P+ terminal and D terminal should not be connected.
- For 7 kW servo amplifiers, the lead wire of built-in regenerative resistor connected to P+ terminal and C terminal should not be connected.
- The wire of power regeneration common converter should be connected to P4 terminal and N- terminal. (Refer to section 11.5.)

e) The power factor improving DC reactor should be connected between P3 and P4. (Refer to section 11.11.)

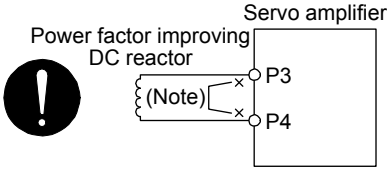

Note. Always disconnect between P3 and P4 terminals.

2) 400 V class

a) When you use a regenerative option for 3.5 kW or less servo amplifiers

- The lead wire between P+ terminal and D terminal should not be connected.
- The regenerative option should be connected to P+ terminal and C terminal.
- Twisted wires be used. (Refer to section 11.2.4.)

b) When you use a regenerative option for 5 kW or more servo amplifiers

- For 5 kW or 7 kW servo amplifiers, the lead wire of the built-in regenerative resistor connected to P+ terminal and C terminal should not be connected.
- The regenerative option should be connected to P+ terminal and C terminal.
- Twisted wires be used. (Refer to section 11.2.4.)

c) When you use a brake unit and power regeneration converter for 5 kW or more servo amplifiers
- For 5 kW or 7 kW servo amplifiers, the lead wire of the built-in regenerative resistor connected to P+ terminal and C terminal should not be connected.
- Brake unit, power regeneration converter should be connected to P+ terminal and N- terminal. (Refer to section 11.3 and 11.4.)
- Twisted wires be used when wiring is over 5 m and equal to or less than 10 m using a brake unit. (Refer to section 11.3)

d) When you use a power regeneration common converter for 11 kW or more servo amplifiers
- Power regeneration common converter should be connected to P4 terminal and N- terminal. (Refer to section 11.5.)

e) The power factor improving DC reactor should be connected between P3 and P4. (Refer to section 11.11.)

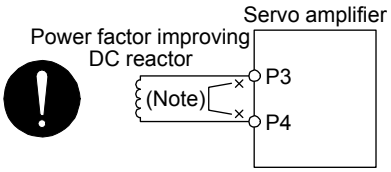

Note. Always disconnect between P3 and P4.

3) 100 V class
- The lead wire between P+ terminal and D terminal should not be connected.
- The regenerative option should be connected to P+ terminal and C terminal.
- Twisted wires be used. (Refer to section 11.2.4.)

(2) I/O signal wiring

(a) The I/O signals should be connected correctly.
Use DO forced output to forcibly turn on/off the pins of the CN3 connector. You can use the function to check the wiring. In this case, switch on the control circuit power supply only.
Refer to section 3.2 for details of I/O signal connection.

(b) 24 V DC or higher voltage is not applied to the pins of the CN3 connector.

(c) Plate and DOCOM of the CN3 connector is not shorted.

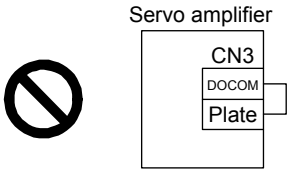

4.1.3 Surrounding environment

(1) Cable routing

(a) The wiring cables should not be stressed.

(b) The encoder cable should not be used in excess of its bending life. (Refer to section 10.4.)

(c) The connector of the servo motor should not be stressed.

(2) Environment

Signal cables and power cables are not shorted by wire offcuts, metallic dust or the like.

4.2 Startup

Connect the servo motor with a machine after confirming that the servo motor operates properly alone.

(1) Power on

When the main and control circuit power supplies are turned on, "b01" (for the first axis) appears on the servo amplifier display.

When the absolute position detection system is used in a rotary servo motor, first power-on results in [AL. 25 Absolute position erased] and the servo-on cannot be ready. The alarm can be deactivated by then switching power off once and on again.

Also, if power is switched on at the servo motor speed of 3000 r/min or higher, position mismatch may occur due to external force or the like. Power must therefore be switched on when the servo motor is at a stop.

(2) Parameter setting

POINT

●The following encoder cables are of four-wire type. When using any of these encoder cables, set [Pr. PC04] to "1 _ _ _" to select the four-wire type. Incorrect setting will result in [AL. 16 Encoder initial communication error 1].
MR-EKCBL30M-L
MR-EKCBL30M-H
MR-EKCBL40M-H
MR-EKCBL50M-H

Set the parameters according to the structure and specifications of the machine. Refer to chapter 5 for details.

After setting the above parameters, turn power off as necessary. Then switch power on again to enable the parameter values.

(3) Servo-on

Enable the servo-on with the following procedure.

(a) Switch on main circuit power supply and control circuit power supply.

(b) Transmit the servo-on command with the controller.

When the servo-on status is enabled, the servo amplifier is ready to operate and the servo motor is locked.

(4) Home position return

Always perform home position return before starting positioning operation.

(5) Stop

Turn off the servo-on command after the servo motor has stopped, and then switch the power off.

If any of the following situations occurs, the servo amplifier suspends the running of the servo motor and brings it to a stop.

Refer to section 3.9 for the servo motor with an electromagnetic brake.

	Operation/command	Stopping condition
Controller	Servo-off command	The base circuit is shut off and the servo motor coasts.
	Ready-off command	The base circuit is shut off and the dynamic brake operates to bring the servo motor to a stop.
	Quick stop command	The servo motor decelerates to a stop with the command.
Servo amplifier	Alarm occurrence	The servo motor decelerates to a stop with the command. With some alarms, however, the dynamic brake operates to bring the servo motor to a stop. (Refer to chapter 8.)
	EM2 (Forced stop 2) off	The servo motor decelerates to a stop with the command. [AL. E6 Servo forced stop warning] occurs. EM2 has the same function as EM1 in the torque mode. Refer to section 3.5 for EM1.
	STO (STO1, STO2) off	The base circuit is shut off and the dynamic brake operates to bring the servo motor to a stop.

4.3 Switch setting and display of the servo amplifier

POINT
●For EtherNet/IP and PROFINET, an IP address is displayed in the digit of the axis number.

Switching to the test operation mode and setting control axis No. are enabled with switches on the servo amplifier.
On the servo amplifier display (three-digit, seven-segment LED), check the status of communication with the controller at power-on, and the axis number, and diagnose a malfunction at occurrence of an alarm.

4.3.1 Switches

⚠WARNING	●When switching the axis selection rotary switch (SW2/SW3) and mode select switch (SW1), use insulated screw driver. Do not use a metal screw driver. Touching patterns on electronic boards, lead of electronic parts, etc. may cause an electric shock.

POINT
●Turning "ON (up)" all the mode select switches (SW1) enables an operation mode for manufacturer setting and displays "off". The mode is not available. Set the mode select switches (SW1) correctly according to this section. ●Cycling the main circuit power supply and control circuit power supply enables the setting of each switch.

The following explains the mode select switches (SW1) and the axis selection rotary switch.

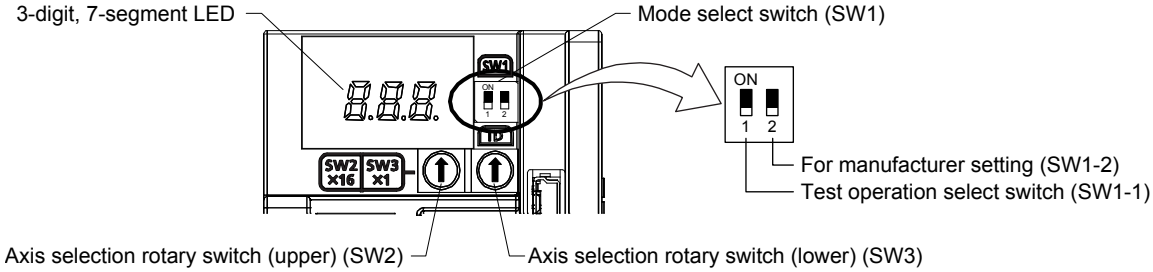

(1) Test operation select switch (SW1-1)
To use the test operation mode, turn "ON (up)" the switch. Turning "ON (up)" the switch enables the test operation mode. In the test operation mode, the functions such as JOG operation, positioning operation, and machine analyzer are available with MR Configurator2.

(2) Axis selection rotary switch (SW2/SW3)
Control axis No. of the servo can be set. For the settings, refer to respective communication method manuals of "MR-J4-_TM_ Servo Amplifier Instruction Manual".

4.3.2 Scrolling display

Axis number will be displayed in hexadecimal. For 100h or more, last two digits will be displayed.

(1) Normal display

(a) For EtherCAT

When there is no alarm, the axis No. and blank are displayed in rotation.

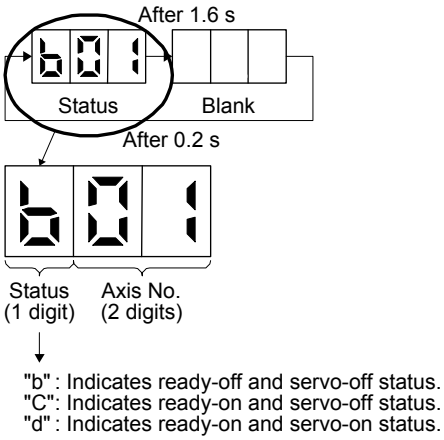

(b) For EtherNet/IP and PROFINET

When there is no alarm, the IP address is displayed.

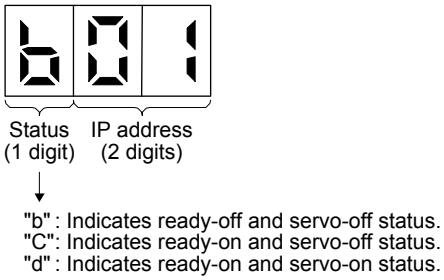

(2) Alarm display

When an alarm occurs, the alarm number (two digits) and the alarm detail (one digit) are displayed following the status display. For example, the following shows when [AL. 32 Overcurrent] is occurring.

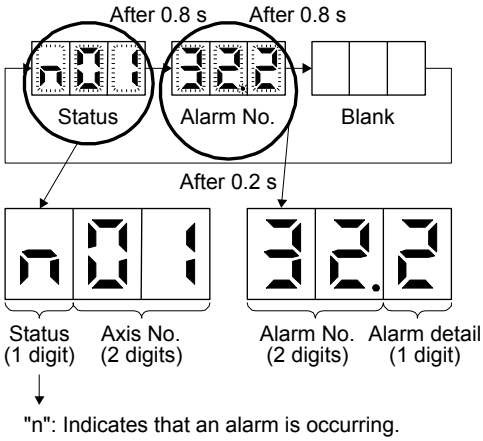

When an alarm occurs during the network initial communication, the alarm number (two digits), the alarm detail (one digit), and the network initial communication status are displayed following the status display. For example, the following shows when [AL. 16.1 Encoder initial communication - Receive data error 1] is occurring.

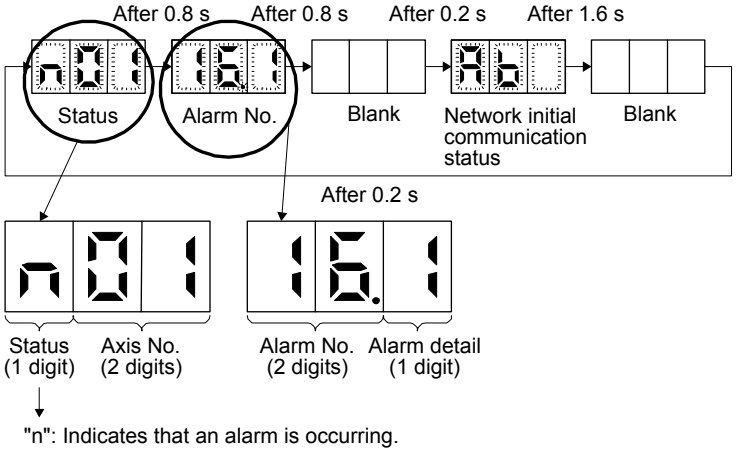

4.3.3 Status display of an axis

(1) Display sequence

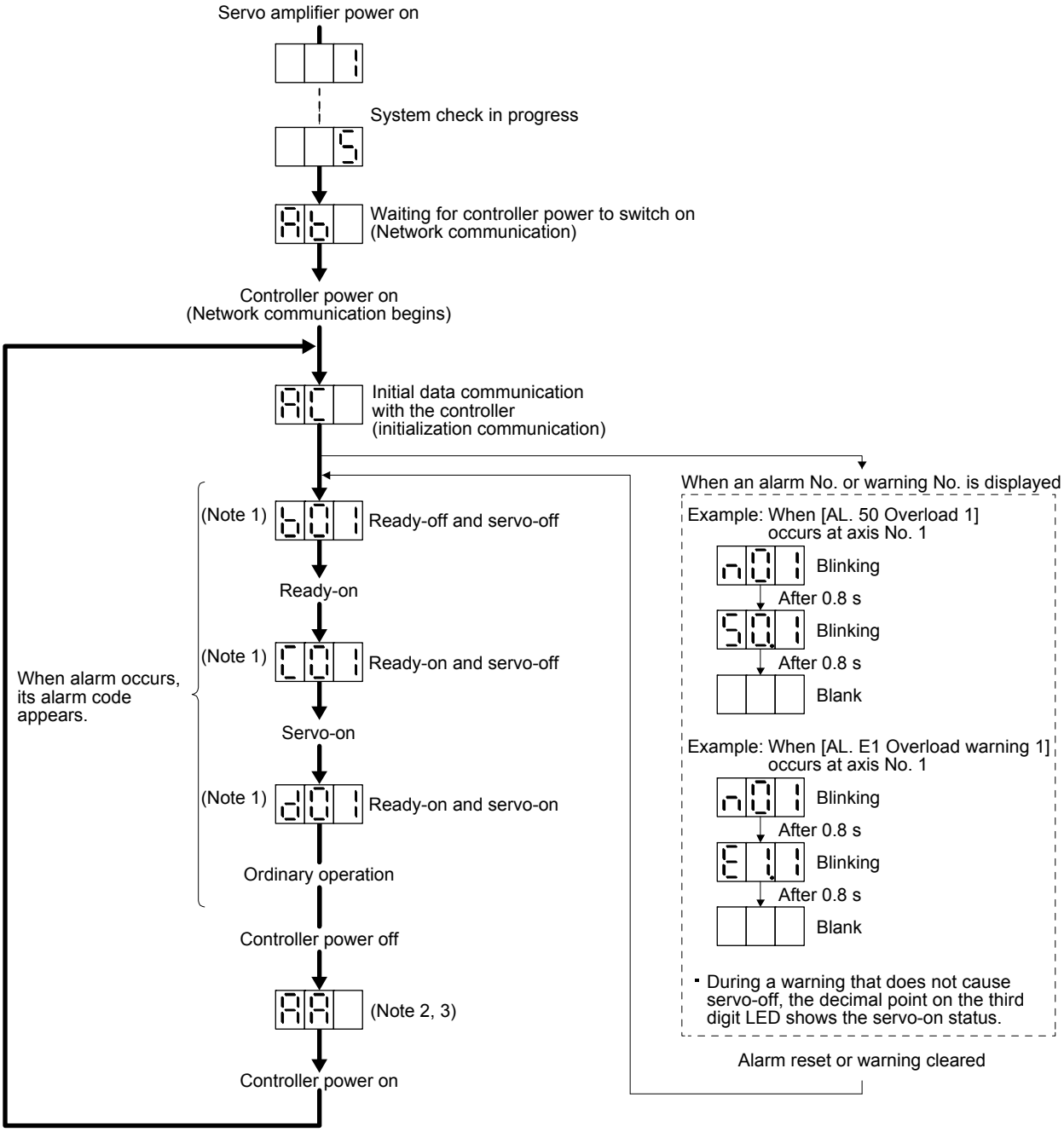

Note 1. 01 02 ··· The segment of the last 2 digits shows the axis number.
Axis No. 1 Axis No. 2

2. For the EtherCAT, turning off the controller power in the "Operational" state triggers [AL. 86.1 Network communication error 1].
3. For PROFINET, "Ab" is displayed.

(2) Indication list

Indication	Status	Description
1 ⋮ 5	Initializing	System check in progress
Ab	Initializing	No connection with the controller
AC	Initializing	During initial communication with the controller
AA	Initializing standby	Communication disconnection with the controller
(Note 1) b##	Ready-off	The ready-off signal from the controller was received.
(Note 1) d##	Servo-on	The ready-off signal from the controller was received.
(Note 1) C##	Servo-off	The ready-off signal from the controller was received.
(Note 1) n##	Alarm occurrence	An alarm or warning occurred on the servo amplifier.
(Note 2) ***	Alarm and warning	The alarm No. and the warning No. that occurred is displayed. (Refer to chapter 8.)
888	CPU error	CPU watchdog error has occurred.
(Note 1) b##. d##. C##.	(Note 3) Test operation mode	During test operation JOG operation, positioning operation, program operation, output signal (DO) forced output, motor-less operation, or single-step feed was set.

Note 1. ## is displayed in hexadecimal. The following table shows the description.

##	Description
00	For the last 2 digits of axis No. or automatic setting with the controller.
01 ~ FF	Last 2 digits of axis No.

2. ** indicates the alarm No. and the warning No.
3. Requires the MR Configurator2.

4.4 Test operation

Before starting actual operation, perform test operation to make sure that the machine operates normally. Refer to section 4.2 for the power on and off methods of the servo amplifier.

> **POINT**
> - If necessary, verify controller program by using motor-less operation. Refer to section 4.5.2 for the motor-less operation.
> - When EtherNet/IP and PROFINET are used and the test operation mode is set, the value set with the axis selection rotary switch (SW2/SW3) is displayed in the digit of the axis number.

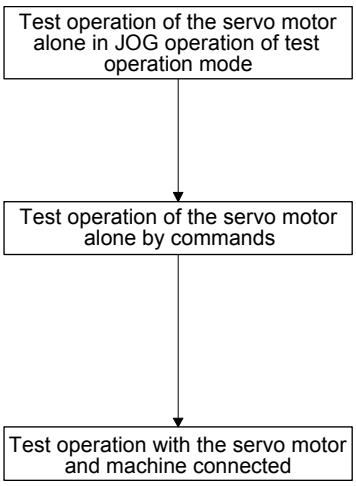

In this step, confirm that the servo amplifier and servo motor operate normally. With the servo motor disconnected from the machine, use the test operation mode and check whether the servo motor rotates correctly. Refer to section 4.5 for the test operation mode.

In this step, confirm that the servo motor rotates correctly under the commands from the controller.
Give a low speed command at first and check the rotation direction, etc. of the servo motor. If the machine does not operate in the intended direction, check the input signal.

In this step, connect the servo motor with the machine and confirm that the machine operates normally under the commands from the controller.
Give a low speed command at first and check the operation direction, etc. of the machine. If the machine does not operate in the intended direction, check the input signal.
Check any problems with the servo motor speed, load ratio, and other status display items with MR Configurator2.
Then, check automatic operation with the program of the controller.

4.5 Test operation mode

> **⚠CAUTION**
> - The test operation mode is designed for checking servo operation. It is not for checking machine operation. Do not use this mode with the machine. Always use the servo motor alone.
> - If the servo motor operates abnormally, use EM2 (Forced stop 2) to stop it.

> **POINT**
> - The content described in this section indicates that the servo amplifier and a personal computer are directly connected.

By using a personal computer and MR Configurator2, you can execute JOG operation, positioning operation, output signal (DO) forced output, and program operation.

4.5.1 Test operation mode in MR Configurator2

POINT

- When the test operation mode is selected with the test operation select switch (SW1-1), the Network communication for the servo amplifier in the test operation mode and the following servo amplifiers is blocked.
- For the EtherCAT, turning on the test operation select switch (SW1-1) with the following parameter settings triggers [AL. 37 Parameter error].
  - "Automatic selection by each network (_ _ _ 0) (initial value)" of "Control mode selection" is selected in [Pr. PA01].
  - "Switching by fully closed loop selection command from controller (C_CLD) and Input device CLD (Fully closed loop selection) (_ _ _ 1)" of "Fully closed loop function selection" is selected in [Pr. PE01].

  In this case, select "Cyclic synchronous mode (_ _ _ 1)" of "Control mode selection" in [Pr. PA01], and turn on the test operation select switch (SW1-1).

(1) Test operation mode

(a) Jog operation

Jog operation can be performed without using the controller. Use this operation with the forced stop reset. This operation may be used independently of whether the servo is on or off and whether the controller is connected or not.

Exercise control on the jog operation screen of MR Configurator2.

1) Operation pattern

Item	initial value	Setting range
Motor speed [r/min]	200	0 to max. speed
Acceleration/deceleration time constant [ms]	1000	0 to 50000

2) Operation method

a) When the check box of "Rotation only while the CCW or CW button is being pushed." is checked.

Operation	Screen control
Forward rotation start	Keep pressing "Forward".
Reverse rotation start	Keep pressing "Reverse".
Stop	Release "Forward" or "Reverse".
Forced stop	Click "Forced stop".

b) When the check box of "Rotation only while the CCW or CW button is being pushed." is not checked.

Operation	Screen control
Forward rotation start	Click "Forward".
Reverse rotation start	Click "Reverse".
Stop	Click "Stop".
Forced stop	Click "Forced stop".

(b) Positioning operation

Positioning operation can be performed without using the controller. Use this operation with the forced stop reset. This operation may be used independently of whether the servo is on or off and whether the controller is connected or not.

Exercise control on the positioning operation screen of MR Configurator2.

1) Operation pattern

Item	initial value	Setting range
Travel distance [pulse]	4000	0 to 99999999
Motor speed [r/min]	200	0 to max. speed
Acceleration/deceleration time constant [ms]	1000	0 to 50000
Repeat pattern	Fwd. rot. (CCW) to rev. rot. (CW)	Fwd. rot. (CCW) to rev. rot. (CW) Fwd. rot. (CCW) to fwd. rot. (CCW) Rev. rot. (CW) to fwd. rot. (CCW) Rev. rot. (CW) to rev. rot. (CW)
Dwell time [s]	2.0	0.1 to 50.0
Number of repeats [time]	1	1 to 9999

2) Operation method

Operation	Screen control
Forward rotation start	Click "Forward".
Reverse rotation start	Click "Reverse".
Pause	Click "Pause".
Stop	Click "Stop".
Forced stop	Click "Forced stop".

(c) Program operation

Positioning operation can be performed in two or more operation patterns combined, without using the controller. Use this operation with the forced stop reset. This operation may be used independently of whether the servo is on or off and whether the controller is connected or not.

Exercise control on the program operation screen of MR Configurator2. For details, refer to Help of MR Configurator2.

Operation	Screen control
Start	Click "Start".
Pause	Click "Pause".
Stop	Click "Stop".
Forced stop	Click "Forced stop".

(d) Output signal (DO) forced output

Output signals can be switched on/off forcibly independently of the servo status. Use this function for output signal wiring check, etc. Exercise control on the DO forced output screen of MR Configurator2.

(e) Single-step feed

The positioning operation can be performed in accordance with the point table No. set with MR Configurator2.

Select the test operation/single-step feed from the menu of MR Configurator2. When the single-step feed window is displayed, input the following items and operate.

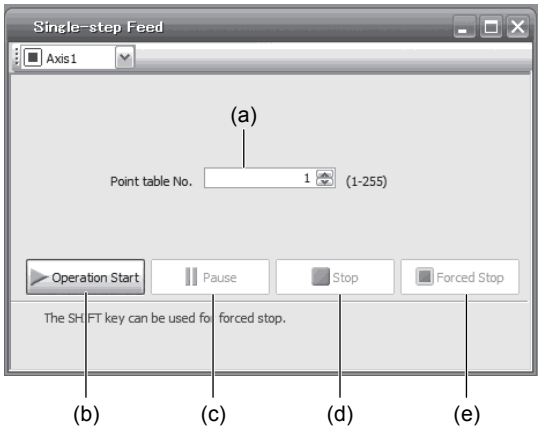

Point table operation

1) Set the point table No.
   Enter a point table No. in the input box (a) "Point table No.".

2) Forward/reverse the servo motor
   Click "Operation Start" (b) to rotate the servo motor.

3) Pause the servo motor
   Click "Pause" (c) to temporarily stop the servo motor.
   Click "Operation Start" (b) during a temporary stop to restart the rotation of the remaining travel distance.
   In addition, click "Stop" (d) during a temporary stop to clear the remaining travel distance.

4) Stop the servo motor
   Click "Stop" (d) to stop the servo motor. At this time, the remaining travel distance will be cleared.
   Click "Operation Start" (b) to restart the rotation.

5) Execute the servo motor forced stop
   Click "Forced Stop" (e) to make an instantaneous stop. When "Forced Stop" is enabled, "Operation Start" cannot be used. Click "Forced Stop" again to enable "Operation Start".

6) Switch to the normal operation mode
   Before switching from the test operation mode to the normal operation mode, turn off the servo amplifier.

(2) Operation procedure

1) Turn off the power.

2) Turn "ON (up)" SW1-1.

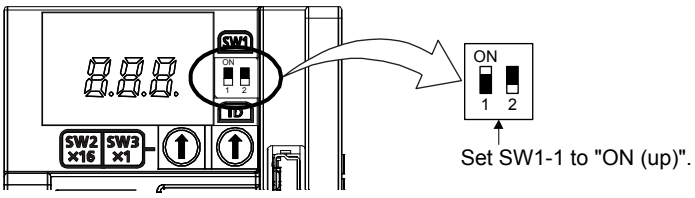

Turning "ON (up)" SW1-1 during power-on will not start the test operation mode.

3) Turn on the servo amplifier.
When initialization is completed, the decimal point on the first digit will blink.

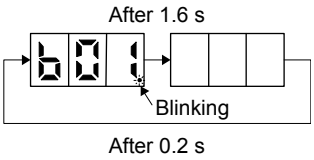

When an alarm or warning also occurs during the test operation, the decimal point on the first digit will blink as follows.

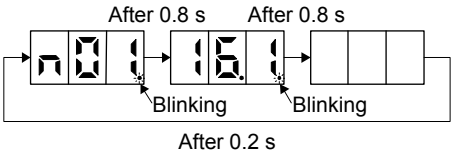

4) Start operation with the personal computer.

4.5.2 Motor-less operation in controller

POINT
●Connect the controller to the servo amplifier before the motor-less operation. ●The motor-less operation cannot be used in the fully closed loop control mode, linear servo motor control mode, or DD motor control mode.

(1) Motor-less operation

Without connecting the servo motor to the servo amplifier, output signals or status displays can be provided in response to the controller commands as if the servo motor is actually running. This operation may be used to check the controller sequence. Use this operation with the forced stop reset. Use this operation with the servo amplifier connected to the controller.

To stop the motor-less operation, set "Disabled (_ _ _ 0)" of "Motor-less operation selection" in [Pr. PC05]. The motor-less operation will be disabled from the next power-on.

(a) Load conditions

Load item	Condition
Load torque	0
Load to motor inertia ratio	[Pr. PB06 Load to motor inertia ratio/load to motor mass ratio]

(b) Alarms

The following alarms and warning do not occur. However, the other alarms and warnings occur as when the servo motor is connected.

- [AL. 16 Encoder initial communication error 1]
- [AL. 1E Encoder initial communication error 2]
- [AL. 1F Encoder initial communication error 3]
- [AL. 20 Encoder normal communication error 1]
- [AL. 21 Encoder normal communication error 2]
- [AL. 25 Absolute position erased]
- [AL. 92 Battery cable disconnection warning]
- [AL. 9F Battery warning]

(2) Operation procedure

1) Set the servo amplifier to the servo-off status.

2) Set [Pr. PC05] to "_ _ _ 1", turn "OFF (down)" the test operation mode switch (SW1-1), and then turn on the power supply.

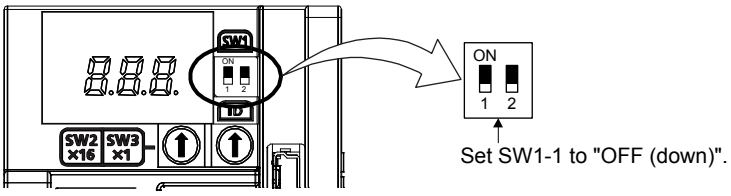

3) Start the motor-less operation with the controller.
The display shows the following screen.

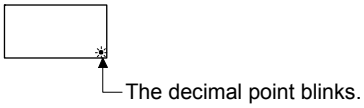

MEMO

5. PARAMETERS

⚠CAUTION	●Never make a drastic adjustment or change to the parameter values as doing so will make the operation unstable. ●Do not change the parameter settings as described below. Doing so may cause an unexpected condition, such as failing to start up the servo amplifier. ・Changing the values of the parameters for manufacturer setting ・Setting a value out of the range ・Changing the fixed values in the digits of a parameter ●When you write parameters with the controller, make sure that the control axis No. of the servo amplifier is set correctly. Otherwise, the parameter settings of another axis may be written, possibly causing the servo amplifier to be an unexpected condition.

POINT

●EtherNet/IP is available with servo amplifiers with software version B0 or later. PROFINET is available with servo amplifiers with software version B1 or later.

●The fractional portion of the value in each of the following parameters will be rounded down. If a value smaller than 1 r/min is set in either of them, the servo motor may not rotate.

・[Pr. PT05 Home position return speed]
・[Pr. PT06 Creep speed]
・[Pr. PT65 Profile speed command]

5.1 Parameter list

POINT

●The parameter whose symbol is preceded by * is enabled with the following conditions:

*: After setting the parameter, cycle the power or reset the network communication.

**: After setting the parameter, cycle the power.

●Abbreviations of operation modes indicate the followings.

Standard: Standard (semi closed loop system) use of the rotary servo motor
Full.: Fully closed loop system use of the rotary servo motor
Lin.: Linear servo motor use
DD: Direct drive (DD) motor use

5.1.1 Basic setting parameters ([Pr. PA_ _])

No.	Symbol	Name	Initial value	Unit	Operation mode			
					Standard	Full.	Lin.	DD
PA01	**STY	Operation mode	1000h		○	○	○	○
PA02	**REG	Regenerative option	0000h		○	○	○	○
PA03	*ABS	Absolute position detection system	0000h		○	○	○	○
PA04	*AOP1	Function selection A-1	2000h		○	○	○	○
PA05		For manufacturer setting	10000					
PA06	*CMX	Electronic gear numerator/Number of gear teeth on machine side	1		○	○	○	○
PA07	*CDV	Electronic gear denominator/Number of gear teeth on servo motor side	1		○	○	○	○
PA08	ATU	Auto tuning mode	0001h		○	○	○	○
PA09	RSP	Auto tuning response	16		○	○	○	○
PA10	INP	In-position range	1600	[μm]/ 10^{-4} [inch]/ 10^{-3} [degree]/ [pulse]	○	○	○	○
PA11	TLP	Forward rotation torque limit/positive direction thrust limit	1000.0	[%]	○	○	○	○
PA12	TLN	Reverse rotation torque limit/negative direction thrust limit	1000.0	[%]	○	○	○	○
PA13		For manufacturer setting	0000h					
PA14	*POL	Rotation direction selection/travel direction selection	0		○	○	○	○
PA15	*ENR	Encoder output pulses	4000	[pulse/rev]	○	○	○	○
PA16	*ENR2	Encoder output pulses 2	1		○	○	○	○
PA17	**MSR	Servo motor series setting	0000h				○	
PA18	**MTY	Servo motor type setting	0000h				○	
PA19	*BLK	Parameter writing inhibit	00ABh		○	○	○	○
PA20	*TDS	Tough drive setting	0000h		○	○	○	○
PA21	*AOP3	Function selection A-3	0001h		○	○	○	○
PA22	**PCS	Position control composition selection	0000h		○	○	○	○
PA23	DRAT	Drive recorder arbitrary alarm trigger setting	0000h		○	○	○	○
PA24	AOP4	Function selection A-4	0000h		○	○	○	○
PA25	OTHOV	One-touch tuning - Overshoot permissible level	0	[%]	○	○	○	○
PA26	*AOP5	Function selection A-5	0000h		○	○	○	○
PA27		For manufacturer setting	0000h					
PA28			0000h					
PA29			0000h					
PA30			0000h					
PA31			0000h					
PA32			0000h					

5.1.2 Gain/filter setting parameters ([Pr. PB_ _])

No.	Symbol	Name	Initial value	Unit	Operation mode			
					Standard	Full.	Lin.	DD
PB01	FILT	Adaptive tuning mode (adaptive filter II)	0000h		○	○	○	○
PB02	VRFT	Vibration suppression control tuning mode (advanced vibration suppression control II)	0000h		○	○	○	○
PB03		For manufacturer setting	18000					
PB04	FFC	Feed forward gain	0	[%]	○	○	○	○
PB05		For manufacturer setting	500					
PB06	GD2	Load to motor inertia ratio/load to motor mass ratio	7.00	[Multiplier]	○	○	○	○
PB07	PG1	Model loop gain	15.0	[rad/s]	○	○	○	○
PB08	PG2	Position loop gain	37.0	[rad/s]	○	○	○	○
PB09	VG2	Speed loop gain	823	[rad/s]	○	○	○	○
PB10	VIC	Speed integral compensation	33.7	[ms]	○	○	○	○
PB11	VDC	Speed differential compensation	980		○	○	○	○
PB12	OVA	Overshoot amount compensation	0	[%]	○	○	○	○
PB13	NH1	Machine resonance suppression filter 1	4500	[Hz]	○	○	○	○
PB14	NHQ1	Notch shape selection 1	0000h		○	○	○	○
PB15	NH2	Machine resonance suppression filter 2	4500	[Hz]	○	○	○	○
PB16	NHQ2	Notch shape selection 2	0000h		○	○	○	○
PB17	NHF	Shaft resonance suppression filter	0000h		○	○	○	○
PB18	LPF	Low-pass filter setting	3141	[rad/s]	○	○	○	○
PB19	VRF11	Vibration suppression control 1 - Vibration frequency	100.0	[Hz]	○	○	○	○
PB20	VRF12	Vibration suppression control 1 - Resonance frequency	100.0	[Hz]	○	○	○	○
PB21	VRF13	Vibration suppression control 1 - Vibration frequency damping	0.00		○	○	○	○
PB22	VRF14	Vibration suppression control 1 - Resonance frequency damping	0.00		○	○	○	○
PB23	VFBF	Low-pass filter selection	0000h		○	○	○	○
PB24	*MVS	Slight vibration suppression control	0000h		○	○	○	○
PB25	*BOP1	Function selection B-1	0000h		○	○	○	○
PB26	*CDP	Gain switching function	0000h		○	○	○	○
PB27	CDL	Gain switching condition	10	[kpulse/s]/ [pulse]/ [r/min]	○	○	○	○
PB28	CDT	Gain switching time constant	1	[ms]	○	○	○	○
PB29	GD2B	Load to motor inertia ratio/load to motor mass ratio after gain switching	7.00	[Multiplier]	○	○	○	○
PB30	PG2B	Position loop gain after gain switching	0.0	[rad/s]	○	○	○	○
PB31	VG2B	Speed loop gain after gain switching	0	[rad/s]	○	○	○	○
PB32	VICB	Speed integral compensation after gain switching	0.0	[ms]	○	○	○	○
PB33	VRF11B	Vibration suppression control 1 - Vibration frequency after gain switching	0.0	[Hz]	○	○	○	○
PB34	VRF12B	Vibration suppression control 1 - Resonance frequency after gain switching	0.0	[Hz]	○	○	○	○
PB35	VRF13B	Vibration suppression control 1 - Vibration frequency damping after gain switching	0.00		○	○	○	○
PB36	VRF14B	Vibration suppression control 1 - Resonance frequency damping after gain switching	0.00		○	○	○	○
PB37		For manufacturer setting	1600					
PB38			0.00					
PB39			0.00					
PB40			0.00					
PB41			0000h					
PB42			0000h					
PB43			0000h					
PB44			0.00					
PB45	CNHF	Command notch filter	0000h		○	○	○	○

No.	Symbol	Name	Initial value	Unit	Operation mode			
					Standard	Full.	Lin.	DD
PB46	NH3	Machine resonance suppression filter 3	4500	[Hz]	○	○	○	○
PB47	NHQ3	Notch shape selection 3	0000h		○	○	○	○
PB48	NH4	Machine resonance suppression filter 4	4500	[Hz]	○	○	○	○
PB49	NHQ4	Notch shape selection 4	0000h		○	○	○	○
PB50	NH5	Machine resonance suppression filter 5	4500	[Hz]	○	○	○	○
PB51	NHQ5	Notch shape selection 5	0000h		○	○	○	○
PB52	VRF21	Vibration suppression control 2 - Vibration frequency	100.0	[Hz]	○	○	○	○
PB53	VRF22	Vibration suppression control 2 - Resonance frequency	100.0	[Hz]	○	○	○	○
PB54	VRF23	Vibration suppression control 2 - Vibration frequency damping	0.00		○	○	○	○
PB55	VRF24	Vibration suppression control 2 - Resonance frequency damping	0.00		○	○	○	○
PB56	VRF21B	Vibration suppression control 2 - Vibration frequency after gain switching	0.0	[Hz]	○	○	○	○
PB57	VRF22B	Vibration suppression control 2 - Resonance frequency after gain switching	0.0	[Hz]	○	○	○	○
PB58	VRF23B	Vibration suppression control 2 - Vibration frequency damping after gain switching	0.00		○	○	○	○
PB59	VRF24B	Vibration suppression control 2 - Resonance frequency damping after gain switching	0.00		○	○	○	○
PB60	PG1B	Model loop gain after gain switching	0.0	[rad/s]	○	○	○	○
PB61		For manufacturer setting	0.0					
PB62			0000h					
PB63			0000h					
PB64			0000h					

5.1.3 Extension setting parameters ([Pr. PC_ _])

No.	Symbol	Name	Initial value	Unit	Operation mode			
					Standard	Full.	Lin.	DD
PC01	ERZ	Error excessive alarm level	0	[rev]/ [mm]	○	○	○	○
PC02	MBR	Electromagnetic brake sequence output	0	[ms]	○	○	○	○
PC03	*ENRS	Encoder output pulse selection	0000h		○	○	○	○
PC04	**COP1	Function selection C-1	0000h		○	○	○	○
PC05	**COP2	Function selection C-2	0000h		○			
PC06	*COP3	Function selection C-3	0000h		○	○	○	○
PC07	ZSP	Zero speed	50	[r/min]/ [mm/s]	○	○	○	○
PC08	OSL	Overspeed alarm detection level	0	[r/min]/ [mm/s]	○	○	○	○
PC09	MOD1	Analog monitor 1 output	0000h		○	○	○	○
PC10	MOD2	Analog monitor 2 output	0001h		○	○	○	○
PC11	MO1	Analog monitor 1 offset	0	[mV]	○	○	○	○
PC12	MO2	Analog monitor 2 offset	0	[mV]	○	○	○	○
PC13		For manufacturer setting	0					
PC14			0					
PC15			0					
PC16			0000h					
PC17	**COP4	Function selection C-4	0000h				○	
PC18	*COP5	Function selection C-5	0010h		○	○	○	○
PC19	*COP6	Function selection C-6	0000h		○	○	○	○
PC20	*COP7	Function selection C-7	0000h		○	○	○	○
PC21	*BPS	Alarm history clear	0000h		○	○	○	○
PC22		For manufacturer setting	0					
PC23			0000h					
PC24	RSBR	Forced stop deceleration time constant	100	[ms]	○	○	○	○
PC25		For manufacturer setting	0					
PC26	**COP8	Function selection C-8	0000h		○ (Note)	○	○	○
PC27	**COP9	Function selection C-9	0000h		○ (Note)	○	○	
PC28		For manufacturer setting	0000h					
PC29	*COPB	Function selection C-B	1000h		○	○	○	○
PC30		For manufacturer setting	0					
PC31	RSUP1	Vertical axis freefall prevention compensation amount	0	[0.0001 rev]/ [0.01 mm]	○	○	○	○
PC32		For manufacturer setting	0000h					
PC33			0					
PC34			100					
PC35			0000h					
PC36			0000h					
PC37			0000h					
PC38	ERW	Error excessive warning level	0	[rev]/[mm]	○	○	○	○
PC39		For manufacturer setting	0000h					
PC40			0000h					
PC41			0000h					
PC42			0000h					
PC43			0000h					
PC44			0000h					
PC45			0000h					

No.	Symbol	Name	Initial value	Unit	Operation mode			
					Standard	Full.	Lin.	DD
PC46		For manufacturer setting	0000h					
PC47			0000h					
PC48			0000h					
PC49			0000h					
PC50			0000h					
PC51			0000h					
PC52			0000h					
PC53			0000h					
PC54			0000h					
PC55			0000h					
PC56			0000h					
PC57			0000h					
PC58			0000h					
PC59			0000h					
PC60			0000h					
PC61			0000h					
PC62			0000h					
PC63			0000h					
PC64			0000h					
PC65	ZSP2L	Zero speed 2 level	50.00	[r/min]/ [mm/s]	○	○	○	○
PC66	ZSP2F	Zero speed 2 filtering time	10	[ms]	○	○	○	○
PC67	FEWL	Following error output level	0000h	10^{STM} [μm]/ $10^{(STM-4)}$ [inch]/ 10^{-3} [degree]/ [pulse]	○	○	○	○
PC68	FEWH		00C0h					
PC69	FEWF	Following error output filtering time	10	[ms]	○	○	○	○
PC70	INP2R	In-position 2 output range	100	10^{STM} [μm]/ $10^{(STM-4)}$ [inch]/ 10^{-3} [degree]/ [pulse]	○	○	○	○
PC71	INP2F	In-position 2 output filtering time	10	[ms]	○	○	○	○
PC72	SA2R	Speed reached 2 output range	20.00	[r/min]/ [mm/s]	○	○	○	○
PC73	SA2F	Speed reached 2 output filtering time	10	[ms]	○	○	○	○
PC74		For manufacturer setting	10.0					
PC75			10					
PC76	*COPE	Function selection C-E	0001h		○	○	○	○
PC77		For manufacturer setting	0000h					
PC78			0000h					
PC79	*COP10	Function selection C-10	0000h		○	○	○	○
PC80		For manufacturer setting	0000h					

Note. It is available when the scale measurement function is enabled ([Pr. PA22] is "1 _ _ _" or "2 _ _ _").

5.1.4 I/O setting parameters ([Pr. PD_ _])

No.	Symbol	Name	Initial value	Unit	Operation mode			
					Standard	Full.	Lin.	DD
PD01	*DIA1	Input signal automatic on selection 1	0000h		○	○	○	○
PD02		For manufacturer setting	0000h					
PD03	*DI1	Input device selection 1	000Ah		○	○	○	○
PD04	*DI2	Input device selection 2	000Bh		○	○	○	○
PD05	*DI3	Input device selection 3	0022h		○	○	○	○
PD06		For manufacturer setting	0000h					
PD07	*DO1	Output device selection 1	0005h		○	○	○	○
PD08	*DO2	Output device selection 2	0004h		○	○	○	○
PD09	*DO3	Output device selection 3	0003h		○	○	○	○
PD10		For manufacturer setting	0000h					
PD11	*DIF	Input filter setting	0004h		○	○	○	○
PD12	*DOP1	Function selection D-1	0101h		○	○	○	○
PD13	*DOP2	Function selection D-2	0000h		○	○	○	○
PD14	*DOP3	Function selection D-3	0000h		○	○	○	○
PD15		For manufacturer setting	0000h					
PD16			0000h					
PD17			0000h					
PD18			0000h					
PD19			0000h					
PD20			0					
PD21			0					
PD22			0					
PD23			0					
PD24			0000h					
PD25			0000h					
PD26			0000h					
PD27			0000h					
PD28			0000h					
PD29			0000h					
PD30			0					
PD31			0					
PD32			0					
PD33			0000h					
PD34			0000h					
PD35			0000h					
PD36			0000h					
PD37	*TPOP	Touch probe function selection	0000h		○	○	○	○
PD38	*TPR1	Touch probe selection 1	002Ch		○	○	○	○
PD39		For manufacturer setting	002Dh					
PD40			0					
PD41			0000h					
PD42			0000h					
PD43			0000h					
PD44			0000h					
PD45			0000h					
PD46			0000h					
PD47			0000h					
PD48			0000h					

5.1.5 Extension setting 2 parameters ([Pr. PE_ _])

No.	Symbol	Name	Initial value	Unit	Operation mode			
					Standard	Full.	Lin.	DD
PE01	**FCT1	Fully closed loop function selection 1	0000h			○		
PE02		For manufacturer setting	0000h					
PE03	*FCT2	Fully closed loop function selection 2	0003h			○		
PE04	**FBN	Fully closed loop control - Feedback pulse electronic gear 1 - Numerator	1			○		
PE05	**FBD	Fully closed loop control - Feedback pulse electronic gear 1 - Denominator	1			○		
PE06	BC1	Fully closed loop control - Speed deviation error detection level	400	[r/min]		○		
PE07	BC2	Fully closed loop control - Position deviation error detection level	100	[kpulse]		○		
PE08	DUF	Fully closed loop dual feedback filter	10	[rad/s]		○		
PE09		For manufacturer setting	0000h					
PE10	FCT3	Fully closed loop function selection 3	0000h			○		
PE11		For manufacturer setting	0000h					
PE12			0000h					
PE13			0000h					
PE14			0111h					
PE15			20					
PE16			0000h					
PE17			0000h					
PE18			0000h					
PE19			0000h					
PE20			0000h					
PE21			0000h					
PE22			0000h					
PE23			0000h					
PE24			0000h					
PE25			0000h					
PE26			0000h					
PE27			0000h					
PE28			0000h					
PE29			0000h					
PE30			0000h					
PE31			0000h					
PE32			0000h					
PE33			0000h					
PE34	**FBN2	Fully closed loop control - Feedback pulse electronic gear 2 - Numerator	1			○		
PE35	**FBD2	Fully closed loop control - Feedback pulse electronic gear 2 - Denominator	1			○		
PE36		For manufacturer setting	0.0					
PE37			0.00					
PE38			0.00					
PE39			20					
PE40			0000h					
PE41	EOP3	Function selection E-3	0000h		○	○	○	○
PE42		For manufacturer setting	0					
PE43			0.0					
PE44	LMCP	Lost motion compensation positive-side compensation value selection	0	[0.01%]	○	○	○	○
PE45	LMCN	Lost motion compensation negative-side compensation value selection	0	[0.01%]	○	○	○	○
PE46	LMFLT	Lost motion filter setting	0	[0.1 ms]	○	○	○	○
PE47	TOF	Torque offset	0	[0.01%]	○	○		
PE48	*LMOP	Lost motion compensation function selection	0000h		○	○	○	○
PE49	LMCD	Lost motion compensation timing	0	[0.1 ms]	○	○	○	○
PE50	LMCT	Lost motion compensation non-sensitive band	0	[pulse]/ [kpulse]	○	○	○	○

No.	Symbol	Name	Initial value	Unit	Operation mode			
					Standard	Full.	Lin.	DD
PE51		For manufacturer setting	0000h					
PE52			0000h					
PE53			0000h					
PE54			0000h					
PE55			0000h					
PE56			0000h					
PE57			0000h					
PE58			0000h					
PE59			0000h					
PE60			0000h					
PE61			0.00					
PE62			0.00					
PE63			0.00					
PE64			0.00					

5.1.6 Extension setting 3 parameters ([Pr. PF_ _])

No.	Symbol	Name	Initial value	Unit	Operation mode			
					Standard	Full.	Lin.	DD
PF01		For manufacturer setting	0000h					
PF02			0000h					
PF03			0000h					
PF04			0					
PF05			0000h					
PF06	*FOP5	Function selection F-5	0000h		○	○		
PF07		For manufacturer setting	0000h					
PF08			0000h					
PF09			0					
PF10			0					
PF11			0					
PF12	DBT	Electronic dynamic brake operating time	2000	[ms]	○	○		
PF13		For manufacturer setting	0000h					
PF14			10					
PF15			0000h					
PF16			0000h					
PF17			0000h					
PF18	**STOD	STO diagnosis error detection time	10	[s]	○	○	○	○
PF19		For manufacturer setting	0000h					
PF20			0000h					
PF21	DRT	Drive recorder switching time setting	0	[s]	○	○	○	○
PF22		For manufacturer setting	200					
PF23	OSCL1	Vibration tough drive - Oscillation detection level	50	[%]	○	○	○	○
PF24	*OSCL2	Vibration tough drive function selection	0000h		○	○	○	○
PF25	CVAT	SEMI-F47 function - Instantaneous power failure detection time	200	[ms]	○	○	○	○
PF26		For manufacturer setting	0					
PF27			0					
PF28			0					
PF29			0000h					
PF30			0					
PF31	FRIC	Machine diagnosis function - Friction judgment speed	0	[r/min]/ [mm/s]	○	○	○	○
PF32		For manufacturer setting	50					
PF33			0000h					
PF34			0000h					
PF35			0000h					
PF36			0000h					
PF37			0000h					
PF38			0000h					
PF39			0000h					
PF40			0000h					
PF41			0000h					
PF42			0000h					
PF43			0000h					
PF44			0					
PF45			0000h					
PF46			0000h					
PF47			0000h					
PF48			0000h					
PF49			100					
PF50			100					

No.	Symbol	Name	Initial value	Unit	Operation mode			
					Standard	Full.	Lin.	DD
PF51		For manufacturer setting	0000h					
PF52			0000h					
PF53			0					
PF54			0					
PF55			0					
PF56			0					
PF57			0000h					
PF58			0000h					
PF59			0000h					
PF60			0000h					
PF61			0000h					
PF62			0000h					
PF63			0000h					
PF64			0000h					

5.1.7 Linear servo motor/DD motor setting parameters ([Pr. PL_ _])

No.	Symbol	Name	Initial value	Unit	Operation mode			
					Standard	Full.	Lin.	DD
PL01	**LIT1	Linear servo motor/DD motor function selection 1	0301h				○	○
PL02	**LIM	Linear encoder resolution - Numerator	1000	[μm]			○	
PL03	**LID	Linear encoder resolution - Denominator	1000	[μm]			○	
PL04	*LIT2	Linear servo motor/DD motor function selection 2	0003h				○	○
PL05	LB1	Position deviation error detection level	0	[mm]/ [0.01 rev]			○	○
PL06	LB2	Speed deviation error detection level	0	[mm/s]/ [r/min]			○	○
PL07	LB3	Torque/thrust deviation error detection level	100	[%]			○	○
PL08	*LIT3	Linear servo motor/DD motor function selection 3	0010h				○	○
PL09	LPWM	Magnetic pole detection voltage level	30	[%]			○	○
PL10		For manufacturer setting	5					
PL11			100					
PL12			500					
PL13			0000h					
PL14			0000h					
PL15			20					
PL16			0					
PL17	LTSTS	Magnetic pole detection - Minute position detection method - Function selection	0000h				○	○
PL18	IDLV	Magnetic pole detection - Minute position detection method - Identification signal amplitude	0	[%]			○	○
PL19		For manufacturer setting	0					
PL20			0					
PL21			0					
PL22			0					
PL23			0000h					
PL24			0					
PL25			0000h					
PL26			0000h					
PL27			0000h					
PL28			0000h					
PL29			0000h					
PL30			0000h					
PL31			0000h					
PL32			0000h					
PL33			0000h					
PL34			0000h					
PL35			0000h					
PL36			0000h					
PL37			0000h					
PL38			0000h					
PL39			0000h					
PL40			0000h					
PL41			0000h					
PL42			0000h					
PL43			0000h					
PL44			0000h					
PL45			0000h					

No.	Symbol	Name	Initial value	Unit	Operation mode			
					Standard	Full.	Lin.	DD
PL46		For manufacturer setting	0000h					
PL47			0000h					
PL48			0000h					

5.1.8 Positioning control parameters ([Pr. PT_ _])

No.	Symbol	Name	Initial value	Unit	Operation mode			
					Standard	Full.	Lin.	DD
PT01	**CTY	Command mode selection	0300h		○	○	○	○
PT02		For manufacturer setting	0001h					
PT03	*FTY	Feeding function selection	0000h		○			○
PT04		For manufacturer setting	0000h					
PT05	ZRF	Home position return speed	100.00	[r/min]/ [mm/s]	○	○	○	○
PT06	CRF	Creep speed	10.00	[r/min]/ [mm/s]	○	○	○	○
PT07	ZST	Home position shift distance	0	[μm]/ 10^{-4} [inch]/ 10^{-3} [degree]/ [pulse]	○	○	○	○
PT08		For manufacturer setting	0					
PT09	DCT	Travel distance after proximity dog	0	10^{STM} [μm]/ $10^{(STM-4)}$ [inch]/ 10^{-3} [degree]/ [pulse]	○	○	○	○
PT10	ZTM	Stopper type home position return stopper time	100	[ms]	○	○	○	○
PT11	ZTT	Stopper type home position return torque limit value	15.0	[%]	○	○	○	○
PT12	CRP	Rough match output range	0	10^{STM} [μm]/ $10^{(STM-4)}$ [inch]/ 10^{-3} [degree]/ [pulse]	○	○	○	○
PT13		For manufacturer setting	100					
PT14			0					
PT15	LMPL	Software limit +	0000h	10^{STM} [μm]/ $10^{(STM-4)}$ [inch]/ 10^{-3} [degree]/ [pulse]	○	○	○	○
PT16	LMPH		0000h					
PT17	LMNL	Software limit -	0000h	10^{STM} [μm]/ $10^{(STM-4)}$ [inch]/ 10^{-3} [degree]/ [pulse]	○	○	○	○
PT18	LMNH		0000h					
PT19	*LPPL	Position range output address +	0000h	10^{STM} [μm]/ $10^{(STM-4)}$ [inch]/ 10^{-3} [degree]/ [pulse]	○	○	○	○
PT20	*LPPH		0000h					

No.	Symbol	Name	Initial value	Unit	Operation mode			
					Standard	Full.	Lin.	DD
PT21	*LNPL	Position range output address -	0000h	10^{STM} [μm]/ $10^{(STM-4)}$ [inch]/ 10^{-3} [degree]/ [pulse]	○	○	○	○
PT22	*LNPH		0000h					
PT23		For manufacturer setting	0					
PT24			0					
PT25			0					
PT26	*TOP2	Function selection T-2	0000h		○	○	○	○
PT27	*ODM	Indexer method - Operation mode selection	0000h		○			○
PT28	*STN	Number of stations per rotation	8	[stations]	○			○
PT29	*TOP3	Function selection T-3	0000h		○	○	○	○
PT30		For manufacturer setting	0000h					
PT31			0000h					
PT32			0000h					
PT33			0000h					
PT34	**PDEF	Point table default	0000h		○	○	○	○
PT35	*TOP5	Function selection T-5	0000h		○			
PT36		For manufacturer setting	0000h					
PT37			10					
PT38			0000h					
PT39	INT	Torque limit delay time	100	[ms]	○			○
PT40	*SZS	Station home position shift distance	0	[pulse]	○			○
PT41	ORP	Home position return inhibit function selection	0000h		○	○	○	○
PT42		For manufacturer setting	0					
PT43			0					
PT44			0000h					
PT45	HMM	Home position return method	37		○	○	○	○
PT46	ESTC	Synchronous encoder filter time constant	0	[ms]	○			
PT47		For manufacturer setting	0000h					
PT48			0000h					
PT49	STA	Acceleration time constant	0	[ms]	○		○	○
PT50	STB	Deceleration time constant	0	[ms]	○		○	○
PT51	STC	S-pattern acceleration/deceleration time constant	0	[ms]	○		○	○
PT52		For manufacturer setting	0					
PT53	TQS	Torque slope	0.0	[%/s]	○	○	○	○
PT54		For manufacturer setting	0					
PT55	*TOP8	Function selection T-8	0000h		○		○	○
PT56	HMA	Home position return acceleration time constant	0	[ms]	○		○	○
PT57	HMB	Home position return deceleration time constant	0	[ms]	○		○	○
PT58		For manufacturer setting	100.00					
PT59			500.00					
PT60			1000.00					
PT61			200.00					
PT62			0000h					
PT63			0000h					
PT64			0000h					
PT65	PVC	Profile speed command	100.00	[r/min]/ [mm/s]	○	○	○	○
PT66	MPVC	Maximum profile speed	20000.00	[r/min]/ [mm/s]	○	○	○	○
PT67	VLMT	Speed limit	500.00	[r/min]/ [mm/s]	○	○	○	○

No.	Symbol	Name	Initial value	Unit	Operation mode			
					Standard	Full.	Lin.	DD
PT68		For manufacturer setting	0102h					
PT69	ZSTH	Home position shift distance (extension parameter)	0	[μm]/ 10^{-4} [inch]/ 10^{-3} [degree]/ [pulse]	○	○	○	○
PT70		For manufacturer setting	0000h					
PT71	DCTH	Travel distance after proximity dog (extension parameter)	0	10^{STM} [μm]/ $10^{(STM-4)}$ [inch]/ 10^{-3} [degree]/ [pulse]	○	○	○	○
PT72	ECMXL	Synchronous encoder electronic gear - Numerator	0000h		○			
PT73	ECMXH		0000h					
PT74	ECDVL	Synchronous encoder electronic gear - Denominator	0000h		○			
PT75	ECDVH		0000h					
PT76		For manufacturer setting	0000h					
PT77			0000h					
PT78			0000h					
PT79			0000h					
PT80			0000h					

5.1.9 Network setting parameters ([Pr. PN_ _])

No.	Symbol	Name	Initial value	Unit	Operation mode			
					Standard	Full.	Lin.	DD
PN01	**NADR	Node address setting	0000h		○	○	○	○
PN02		For manufacturer setting	0					
PN03			0000h					
PN04			0000h					
PN05			0000h					
PN06			0000h					
PN07			0000h					
PN08			0000h					
PN09			0000h					
PN10			0000h					
PN11			0000h					
PN12			0000h					
PN13			0000h					
PN14			0000h					
PN15			0000h					
PN16			0000h					
PN17			0000h					
PN18			0000h					
PN19			0000h					
PN20			0000h					
PN21			0000h					
PN22			0000h					
PN23			0000h					
PN24			0000h					
PN25			0000h					
PN26			0000h					
PN27			0000h					
PN28			0000h					
PN29			0000h					
PN30			0000h					
PN31			0000h					
PN32			0000h					

5.2 Detailed list of parameters

POINT

- Set a value to each "x" in the "Setting digit" columns.
- Symbols in the network column indicate the following networks.
  ECT: EtherCAT
  EIP: EtherNet/IP
  PNT: PROFINET
  EtherNet/IP is available with servo amplifiers with software version B0 or later.
  PROFINET is available with servo amplifiers with software version B1 or later.

5.2.1 Basic setting parameters ([Pr. PA_ _])

No./ symbol/name	Setting digit	Function	Initial value [unit]	Network		
				ECT	EIP	PNT
PA01 **STY Operation mode	_ _ _ x	Control mode selection Select a control mode. 0: Automatic selection by each network It will be "Profile mode" during test operation or when the network module is not connected. 1: Cyclic synchronous mode 2: Profile mode 6: Positioning mode (point table method) 8: Positioning mode (indexer method) Setting any value other than above will trigger [AL. 37 Parameter error]. Setting "1" when an incompatible network module is connected will trigger [AL. 37 Parameter error]. With EtherNet/IP, setting "6" or "8" will trigger [AL. 37 Parameter error]. The setting values of "6" and "8" are available with servo amplifier with software version B2 or later. Refer to table 5.1 for details of control modes in respective networks.	0h	○	○	○
	_ _ x _	Operation mode selection 0: Standard control mode 1: Fully closed loop control mode 4. Linear servo motor control mode 6: DD motor control mode Setting any value other than above will trigger [AL. 37 Parameter error]. Setting "1" or "4" in the positioning mode (indexer method) will trigger [AL. 37]. If "1" or "4" is set while degree unit is selected in the profile mode or positioning mode, [AL. 37] will occur.	0h	○	○	○
	_ x _ _	For manufacturer setting	0h			
	x _ _ _		1h			

Table 5.1 Control mode selection

[Pr. PA01] setting	Control mode		
	EtherCAT	EtherNet/IP (Note 2)	PROFINET (Note 3)
_ _ _ 0	Cyclic synchronous mode (csp/csv/cst) (Note 1) Homing mode (hm)	Profile mode (pp/pv/tq)/homing mode (hm)	
_ _ _ 1	Cyclic synchronous mode (csp/csv/cst) Homing mode (hm)		
_ _ _ 2	Profile mode (pp/pv/tq)/homing mode (hm)		
_ _ _ 6	Point table mode (pt)/Jog mode (jg)/homing mode (hm)		Point table mode (pt)/Jog mode (jg)/homing mode (hm)
_ _ _ 8	Indexer mode (idx)/Jog mode (jg)/homing mode (hm)		Indexer mode (idx)/Jog mode (jg)/homing mode (hm)

Note 1. Selecting "Fully closed loop selection command from controller (C_CLD) and switching by Input device CLD (Fully closed loop selection) (_ _ _1)" of "Fully closed loop function selection" in [Pr. PE01] will trigger [AL. 37 Parameter error] by turning on the test operation select switch (SW1-1).
2. This is available with servo amplifiers with software version B0 or later.
3. This is available with servo amplifiers with software version B1 or later.

No./ symbol/name	Setting digit	Function	Initial value [unit]	Network		
				ECT	EIP	PNT
PA02 **REG Regenerative option	_ _ x x	Regenerative option Select a regenerative option. Incorrect setting may cause the regenerative option to burn. If a selected regenerative option is not for use with the servo amplifier, [AL. 37 Parameter error] occurs. 00: Regenerative option is not used. ・For the servo amplifiers of 100 W, a regenerative resistor is not used. ・For servo amplifier of 0.2 kW to 7 kW, built-in regenerative resistor is used. ・Supplied regenerative resistors or regenerative option is used with the servo amplifier of 11 kW to 22 kW. 01: FR-RC-(H)/FR-CV-(H)/FR-BU2-(H) When you use FR-RC-(H) or FR-CV-(H), select "1" of "[AL. 10 Undervoltage] detection method selection" in [Pr. PC20]. 02: MR-RB032 03: MR-RB12 04: MR-RB32 05: MR-RB30 06: MR-RB50 (Cooling fan is required.) 08: MR-RB31 09: MR-RB51 (Cooling fan is required.) 0B: MR-RB3N 0C: MR-RB5N (Cooling fan is required.) 80: MR-RB1H-4 81: MR-RB3M-4 (Cooling fan is required.) 82: MR-RB3G-4 (Cooling fan is required.) 83: MR-RB5G-4 (Cooling fan is required.) 84: MR-RB34-4 (Cooling fan is required.) 85: MR-RB54-4 (Cooling fan is required.) 91: MR-RB3U-4 (Cooling fan is required.) 92: MR-RB5U-4 (Cooling fan is required.) FA: When the supplied regenerative resistors or the regenerative option is cooled by the cooling fan to increase the ability with the servo amplifier of 11 kW to 22 kW.	00h	○	○	○
	_ x _ _	For manufacturer setting	0h			
	x _ _ _		0h			
PA03 *ABS Absolute position detection system	_ _ _ x	Absolute position detection system selection Set this digit when using the absolute position detection system. 0: Disabled (incremental system) 1:Enabled (absolute position detection system) The absolute position detection system cannot be used when an incremental type linear encoder is used or the semi closed loop/fully closed loop switching is enabled. Enabling the absolute position detection system will trigger [AL. 37].	0h	○	○	○
	_ _ x _	For manufacturer setting	0h			
	_ x _ _		0h			
	x _ _ _		0h			

No./ symbol/name	Setting digit	Function	Initial value [unit]	Network		
				ECT	EIP	PNT
PA04 *AOP1 Function selection A-1	_ _ _ x	For manufacturer setting	0h			
	_ _ x _		0h			
	_ x _ _	Servo forced stop selection 0: Enabled (The forced stop input EM2 or EM1 is used.) 1: Disabled (The forced stop input EM2 and EM1 are not used.) Refer to table 5.2 for details.	0h	○	○	○
	x _ _ _	Forced stop deceleration function selection 0: Forced stop deceleration function disabled (EM1) 2: Forced stop deceleration function enabled (EM2) Refer to table 5.2 for details.	2h	○	○	○

Table 5.2 Deceleration method

Setting value	EM2/EM1	Deceleration method	
		EM2 or EM1 is off	Alarm occurred
0 0 _ _	EM1	MBR (Electromagnetic brake interlock) turns off without the forced stop deceleration.	MBR (Electromagnetic brake interlock) turns off without the forced stop deceleration.
2 0 _ _	EM2	MBR (Electromagnetic brake interlock) turns off after the forced stop deceleration.	MBR (Electromagnetic brake interlock) turns off after the forced stop deceleration.
0 1 _ _	Not using EM2 and EM1		MBR (Electromagnetic brake interlock) turns off without the forced stop deceleration.
2 1 _ _	Not using EM2 and EM1		MBR (Electromagnetic brake interlock) turns off after the forced stop deceleration.

No./ symbol/name	Setting digit	Function	Initial value [unit]	Network		
				ECT	EIP	PNT
PA06 *CMX Electronic gear numerator/ Number of gear teeth on machine side		・In the cyclic synchronous mode Set an electronic gear numerator. The following shows the recommended range of the electronic gear ratio. Refer to section 5.4.1 for details. $\frac{1}{10} < \frac{CMX}{CDV} < 4000$ If any value other than the recommended range is set, noise may be generated during acceleration/deceleration. In servo amplifiers with software version B2 or earlier, setting other values than 1/1 will trigger [AL. 37 Parameter error]. ・In the profile mode and the positioning mode (point table method) Set an electronic gear numerator. Set the electronic gear within the following range. Setting out of the range will trigger [AL. 37 Parameter error]. Refer to section 5.4.1 for details. $\frac{1}{865} < \frac{CMX}{CDV} < 271471$ ・In the positioning mode (indexer method) Set the number of gear teeth on machine side. Set the electronic gear within the following range. Refer to section 5.4.2 for details. (1) $1 \leq CMX \leq 16384$, $1 \leq CDV \leq 16384$ (2) $\frac{1}{9999} \leq \frac{CMX}{CDV} \leq 9999$ (3) $CDV \times STN \leq 32767$ (STN: Number of stations per rotation [Pr. PT28]) (4) $CMX \times CDV \leq 100000$ Setting out of the range will trigger [AL. 37 Parameter error]. When a small value is set to the electronic gear ratio with the manual operation mode, the servo motor may not drive at the set servo motor speed. Travel distance of 1 station = P_t (servo motor resolution) $\times \frac{1}{STN} \times \frac{CMX}{CDV}$ This parameter corresponds to "Motor revolutions (Index: 6091h, Sub: 1)". When this parameter is mapped for the PDO communication, the value written with MR Configurator2 is overwritten with the controller. Thus, do not write a value with MR Configurator2. Setting range: 1 to 16777215	1	○		
PA06 *CMX Electronic gear numerator		Set an electronic gear numerator. Set the electronic gear within the following range. Setting out of the range will trigger [AL. 37 Parameter error]. Refer to section 5.4.1 for details. $\frac{1}{865} < \frac{CMX}{CDV} < 271471$ This parameter corresponds to "Motor revolutions (Class ID: 64h, Ins ID: 6091h, Attr ID: 1)". When this parameter is mapped for the I/O communication, the value written with MR Configurator2 is overwritten with the controller. Thus, do not write a value with MR Configurator2. Setting range: 1 to 16777215	1		○	

No./ symbol/name	Setting digit	Function	Initial value [unit]	Network		
				ECT	EIP	PNT
PA06 *CMX Electronic gear numerator/ Number of gear teeth on machine side		・In the profile mode and the positioning mode (point table method) Set an electronic gear numerator. Set the electronic gear within the following range. Setting out of the range will trigger [AL. 37 Parameter error]. Refer to section 5.4.1 for details. $\frac{1}{865} < \frac{CMX}{CDV} < 271471$ ・In the positioning mode (indexer method) Set the number of gear teeth on machine side. Set the electronic gear within the following range. Refer to section 5.4.2 for details. (1) $1 \leq CMX \leq 16384$, $1 \leq CDV \leq 16384$ (2) $\frac{1}{9999} \leq \frac{CMX}{CDV} \leq 9999$ (3) $CDV \times STN \leq 32767$ (STN: Number of stations per rotation [Pr. PT28]) (4) $CMX \times CDV \leq 100000$ Setting out of the range will trigger [AL. 37 Parameter error]. When a small value is set to the electronic gear ratio with the manual operation mode, the servo motor may not drive at the set servo motor speed. Travel distance of 1 station = P_t (servo motor resolution) $\times \frac{1}{STN} \times \frac{CMX}{CDV}$ This parameter corresponds to "Motor revolutions (PNU: 24721, Sub: 0)". When this parameter is mapped for the Process Data communication, the value written with MR Configurator2 is overwritten with the controller. Thus, do not write a value with MR Configurator2. Setting range: 1 to 16777215	1			○

No./ symbol/name	Setting digit	Function	Initial value [unit]	Network		
				ECT	EIP	PNT
PA07 *CDV Electronic gear denominator/ Number of gear teeth on servo motor side		Set an electronic gear denominator. In the indexer method, set the number of gear teeth on servo motor side. Set the value within the range of [Pr. PA06]. This parameter corresponds to "Shaft revolutions (Index: 6091h, Sub: 2)". When this parameter is mapped for the PDO communication, the value written with MR Configurator2 is overwritten with the controller. Thus, do not write a value with MR Configurator2. Setting range: 1 to 16777215	1	○		
		Set an electronic gear denominator. Set the value within the range of [Pr. PA06]. This parameter corresponds to "Shaft revolutions (Class ID: 64h, Ins ID: 6091h, Attr ID: 2)". When this parameter is mapped for the I/O communication, the value written with MR Configurator2 is overwritten with the controller. Thus, do not write a value with MR Configurator2. Setting range: 1 to 16777215	1		○	
		Set an electronic gear denominator. In the indexer method, set the number of gear teeth on servo motor side. Set the value within the range of [Pr. PA06]. This parameter corresponds to "Shaft revolutions (PNU: 24721, Sub: 1)". When this parameter is mapped for the Process Data communication, the value written with MR Configurator2 is overwritten with the controller. Thus, do not write a value with MR Configurator2. Setting range: 1 to 16777215	1			○

No./ symbol/name	Setting digit	Function	Initial value [unit]	Network		
				ECT	EIP	PNT
PA08 ATU Auto tuning mode	_ _ _ x	Gain adjustment mode selection Select the gain adjustment mode. 0: 2 gain adjustment mode 1 (interpolation mode) 1: Auto tuning mode 1 2: Auto tuning mode 2 3: Manual mode 4: 2 gain adjustment mode 2 Refer to table 5.3 for details.	1h	○	○	○
	_ _ x _	For manufacturer setting	0h			
	_ x _ _		0h			
	x _ _ _		0h			

Table 5.3 Gain adjustment mode selection

Setting value	Gain adjustment mode	Automatically adjusted parameter
_ _ _ 0	2 gain adjustment mode 1 (interpolation mode)	[Pr. PB06 Load to motor inertia ratio/load to motor mass ratio] [Pr. PB08 Position loop gain] [Pr. PB09 Speed loop gain] [Pr. PB10 Speed integral compensation]
_ _ _ 1	Auto tuning mode 1	[Pr. PB06 Load to motor inertia ratio/load to motor mass ratio] [Pr. PB07 Model loop gain] [Pr. PB08 Position loop gain] [Pr. PB09 Speed loop gain] [Pr. PB10 Speed integral compensation]
_ _ _ 2	Auto tuning mode 2	[Pr. PB07 Model loop gain] [Pr. PB08 Position loop gain] [Pr. PB09 Speed loop gain] [Pr. PB10 Speed integral compensation]
_ _ _ 3	Manual mode	
_ _ _ 4	2 gain adjustment mode 2	[Pr. PB08 Position loop gain] [Pr. PB09 Speed loop gain] [Pr. PB10 Speed integral compensation]

<table>
<tr><th rowspan="2">No./
symbol/name</th><th rowspan="2">Setting
digit</th><th rowspan="2">Function</th><th rowspan="2">Initial
value
[unit]</th><th colspan="3">Network</th></tr>
<tr><th>ECT</th><th>EIP</th><th>PNT</th></tr>
<tr><td>PA09
RSP
Auto tuning
response</td><td></td><td>Set the auto tuning response.
<table>
<tr><th rowspan="2">Setting
value</th><th colspan="2">Machine characteristic</th></tr>
<tr><th>Response</th><th>Guideline for
machine
resonance
frequency [Hz]</th></tr>
<tr><td>1</td><td rowspan="20">Low
response
↕
Middle
response</td><td>2.7</td></tr>
<tr><td>2</td><td>3.6</td></tr>
<tr><td>3</td><td>4.9</td></tr>
<tr><td>4</td><td>6.6</td></tr>
<tr><td>5</td><td>10.0</td></tr>
<tr><td>6</td><td>11.3</td></tr>
<tr><td>7</td><td>12.7</td></tr>
<tr><td>8</td><td>14.3</td></tr>
<tr><td>9</td><td>16.1</td></tr>
<tr><td>10</td><td>18.1</td></tr>
<tr><td>11</td><td>20.4</td></tr>
<tr><td>12</td><td>23.0</td></tr>
<tr><td>13</td><td>25.9</td></tr>
<tr><td>14</td><td>29.2</td></tr>
<tr><td>15</td><td>32.9</td></tr>
<tr><td>16</td><td>37.0</td></tr>
<tr><td>17</td><td>41.7</td></tr>
<tr><td>18</td><td>47.0</td></tr>
<tr><td>19</td><td>52.9</td></tr>
<tr><td>20</td><td>59.6</td></tr>
</table>
<table>
<tr><th rowspan="2">Setting
value</th><th colspan="2">Machine characteristic</th></tr>
<tr><th>Response</th><th>Guideline for
machine
resonance
frequency [Hz]</th></tr>
<tr><td>21</td><td rowspan="20">Middle
response
↕
High
response</td><td>67.1</td></tr>
<tr><td>22</td><td>75.6</td></tr>
<tr><td>23</td><td>85.2</td></tr>
<tr><td>24</td><td>95.9</td></tr>
<tr><td>25</td><td>108.0</td></tr>
<tr><td>26</td><td>121.7</td></tr>
<tr><td>27</td><td>137.1</td></tr>
<tr><td>28</td><td>154.4</td></tr>
<tr><td>29</td><td>173.9</td></tr>
<tr><td>30</td><td>195.9</td></tr>
<tr><td>31</td><td>220.6</td></tr>
<tr><td>32</td><td>248.5</td></tr>
<tr><td>33</td><td>279.9</td></tr>
<tr><td>34</td><td>315.3</td></tr>
<tr><td>35</td><td>355.1</td></tr>
<tr><td>36</td><td>400.0</td></tr>
<tr><td>37</td><td>446.6</td></tr>
<tr><td>38</td><td>501.2</td></tr>
<tr><td>39</td><td>571.5</td></tr>
<tr><td>40</td><td>642.7</td></tr>
</table>
Setting range: 1 to 40</td><td>16</td><td>○</td><td>○</td><td>○</td></tr>
<tr><td>PA10
INP
In-position
range</td><td></td><td>Set an in-position range per command pulse.
To change it to the servo motor encoder pulse unit, set [Pr. PC06].
<table>
<tr><th>Pr. PA01</th><th>In-position setting range</th></tr>
<tr><td>_ _ _ 0 (Automatic selection by each network)
_ _ _ 1 (Cyclic synchronous mode)
_ _ _ 2 (Profile mode)</td><td>The range in which INP/S_INP (In-position) turns on</td></tr>
<tr><td>_ _ _ 6 (Positioning mode (point table method))
_ _ _ 8 (Positioning mode (indexer method))</td><td>The range in which S_MEND (Travel completion) and INP/S_INP (In-position) turn on</td></tr>
</table>
The unit will be as follows, depending on the control mode.
・In the cyclic synchronous mode
The unit is [pulse].
・In the profile mode and the point table method
When [Pr. PC06] is set to "_ _ _ 0", the unit can be changed to [μm], 10^{-4} [inch], 10^{-3} [degree] or [pulse] with the setting of [Pr. PT01]. When [Pr. PC06] is set to "_ _ _ 1", the unit is [pulse].
・In the indexer method
Command unit [pulse] (A load-side rotation expressed by the number of servo motor resolution pulses)
For example, when making an in-position range "± 1 degree" for the rotation angle on the load side, set 4194304 × (1/360) = 11650 pulses.
Setting range: 0 to 65535</td><td>1600
Refer
to
Function
column
for unit.</td><td>○</td><td>○</td><td>○</td></tr>
</table>

No./ symbol/name	Setting digit	Function	Initial value [unit]	Network		
				ECT	EIP	PNT
PA11 TLP Forward rotation torque limit/positive direction thrust limit		You can limit the torque or thrust generated by the servo motor. When torque or thrust is output with the analog monitor output, the setting of [Pr. PA11 Forward rotation torque limit/positive direction thrust limit] or [Pr. PA12 Reverse rotation torque limit/negative direction thrust limit], whichever is larger, will be the maximum output voltage (8 V). Set the parameter on the assumption that the rated torque or continuous thrust is 100.0 [%]. Set the parameter for limiting the torque of the servo motor in the CCW power running or CW regeneration, or for limiting the thrust of the linear servo motor in the positive direction power running or negative direction regeneration. Set this parameter to "0.0" to generate no torque or thrust. The polarity of the torque limit can be changed depending on the setting values of [Pr. PA14 Rotation direction selection/travel direction selection] and [Pr. PC29 POL reflection selection at torque mode]. This parameter corresponds to "Positive torque limit value (Index: 60E0h)". When this parameter is mapped for the PDO communication, the value written with MR Configurator2 is overwritten with the controller. Thus, do not write a value with MR Configurator2. Setting range: 0.0 to 1000.0	1000.0 [%]	○		
		You can limit the torque or thrust generated by the servo motor. When torque or thrust is output with the analog monitor output, the setting of [Pr. PA11 Forward rotation torque limit/positive direction thrust limit] or [Pr. PA12 Reverse rotation torque limit/negative direction thrust limit], whichever is larger, will be the maximum output voltage (8 V). Set the parameter on the assumption that the rated torque or continuous thrust is 100.0 [%]. Set the parameter for limiting the torque of the servo motor in the CCW power running or CW regeneration, or for limiting the thrust of the linear servo motor in the positive direction power running or negative direction regeneration. Set this parameter to "0.0" to generate no torque or thrust. The polarity of the torque limit can be changed depending on the setting values of [Pr. PA14 Rotation direction selection/travel direction selection] and [Pr. PC29 POL reflection selection at torque mode]. This parameter corresponds to "Positive torque limit value (Class ID: 64h, Ins ID: 60E0h, Attr ID: 0)". When this parameter is mapped for the I/O communication, the value written with MR Configurator2 is overwritten with the controller. Thus, do not write a value with MR Configurator2. Setting range: 0.0 to 1000.0	1000.0 [%]		○	
		You can limit the torque or thrust generated by the servo motor. When torque or thrust is output with the analog monitor output, the setting of [Pr. PA11 Forward rotation torque limit/positive direction thrust limit] or [Pr. PA12 Reverse rotation torque limit/negative direction thrust limit], whichever is larger, will be the maximum output voltage (8 V). Set the parameter on the assumption that the rated torque or continuous thrust is 100.0 [%]. Set the parameter for limiting the torque of the servo motor in the CCW power running or CW regeneration, or for limiting the thrust of the linear servo motor in the positive direction power running or negative direction regeneration. Set this parameter to "0.0" to generate no torque or thrust. The polarity of the torque limit can be changed depending on the setting values of [Pr. PA14 Rotation direction selection/travel direction selection] and [Pr. PC29 POL reflection selection at torque mode]. This parameter corresponds to "Positive torque limit value (PNU: 24800, Sub: 0)". When this parameter is mapped for the Process Data communication, the value written with MR Configurator2 is overwritten with the controller. Thus, do not write a value with MR Configurator2. Setting range: 0.0 to 1000.0	1000.0 [%]			○

No./ symbol/name	Setting digit	Function	Initial value [unit]	Network		
				ECT	EIP	PNT
PA12 TLN Reverse rotation torque limit/negative direction thrust limit		You can limit the torque or thrust generated by the servo motor. When torque or thrust is output with the analog monitor output, the setting of [Pr. PA11 Forward rotation torque limit/positive direction thrust limit] or [Pr. PA12 Reverse rotation torque limit/negative direction thrust limit], whichever is larger, will be the maximum output voltage (8 V). Set the parameter on the assumption that the rated torque or continuous thrust is 100.0 [%]. The parameter is for limiting the torque of the servo motor in the CW power running or CCW regeneration, or for limiting the thrust of the linear servo motor in the negative direction power running or positive direction regeneration. Set this parameter to "0.0" to generate no torque or thrust. The polarity of the torque limit can be changed depending on the setting values of [Pr. PA14 Rotation direction selection/travel direction selection] and [Pr. PC29 POL reflection selection at torque mode]. This parameter corresponds to "Negative torque limit value (Index: 60E1)". When this parameter is mapped for the PDO communication, the value written with MR Configurator2 is overwritten with the controller. Thus, do not write a value with MR Configurator2. Setting range: 0.0 to 1000.0	1000.0 [%]	○		
		You can limit the torque or thrust generated by the servo motor. When torque or thrust is output with the analog monitor output, the setting of [Pr. PA11 Forward rotation torque limit/positive direction thrust limit] or [Pr. PA12 Reverse rotation torque limit/negative direction thrust limit], whichever is larger, will be the maximum output voltage (8 V). Set the parameter on the assumption that the rated torque or continuous thrust is 100.0 [%]. The parameter is for limiting the torque of the servo motor in the CW power running or CCW regeneration, or for limiting the thrust of the linear servo motor in the negative direction power running or positive direction regeneration. Set this parameter to "0.0" to generate no torque or thrust. The polarity of the torque limit can be changed depending on the setting values of [Pr. PA14 Rotation direction selection/travel direction selection] and [Pr. PC29 POL reflection selection at torque mode]. This parameter corresponds to "Negative torque limit value (Class ID: 64h, Ins ID: 60E1h, Attr ID: 0)". When this parameter is mapped for the I/O communication, the value written with MR Configurator2 is overwritten with the controller. Thus, do not write a value with MR Configurator2. Setting range: 0.0 to 1000.0	1000.0 [%]		○	
		You can limit the torque or thrust generated by the servo motor. When torque or thrust is output with the analog monitor output, the setting of [Pr. PA11 Forward rotation torque limit/positive direction thrust limit] or [Pr. PA12 Reverse rotation torque limit/negative direction thrust limit], whichever is larger, will be the maximum output voltage (8 V). Set the parameter on the assumption that the rated torque or continuous thrust is 100.0 [%]. The parameter is for limiting the torque of the servo motor in the CW power running or CCW regeneration, or for limiting the thrust of the linear servo motor in the negative direction power running or positive direction regeneration. Set this parameter to "0.0" to generate no torque or thrust. The polarity of the torque limit can be changed depending on the setting values of [Pr. PA14 Rotation direction selection/travel direction selection] and [Pr. PC29 POL reflection selection at torque mode]. This parameter corresponds to "Negative torque limit value (PNU: 24801, Sub: 0)". When this parameter is mapped for the Process Data communication, the value written with MR Configurator2 is overwritten with the controller. Thus, do not write a value with MR Configurator2. Setting range: 0.0 to 1000.0	1000.0 [%]			○

No./ symbol/name	Setting digit	Function	Initial value [unit]	Network		
				ECT	EIP	PNT
PA14 *POL Rotation direction selection/ travel direction selection		Select a rotation direction or travel direction. You can enable or disable the following settings for the torque mode depending on the setting value of [Pr. PC29 POL reflection selection at torque mode]. ・At position mode/velocity mode	0	○	○	○

Setting value	Servo motor rotation direction/linear servo motor travel direction	
	Position mode Positioning address increase/ Velocity mode Speed command: Positive	Position mode Positioning address decrease/ Velocity mode Speed command: Negative
0	CCW or positive direction	CW or negative direction
1	CW or negative direction	CCW or positive direction

・At torque mode

Setting value		Servo motor rotation direction/travel direction	
[Pr. PA14]	[Pr. PC29]	Torque mode Torque command: Positive	Torque mode Torque command: Negative
0	0 _ _ _: Enabled	CCW or positive direction	CW or negative direction
	1 _ _ _: Disabled	CCW or positive direction	CW or negative direction
1	0 _ _ _: Enabled	CW or negative direction	CCW or positive direction
	1 _ _ _: Disabled	CCW or positive direction	CW or negative direction

The following shows the servo motor rotation directions.

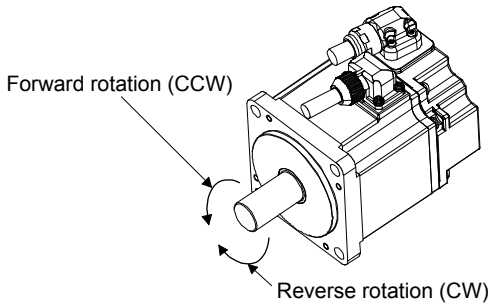

The positive/negative directions of the linear servo motor are as follows.

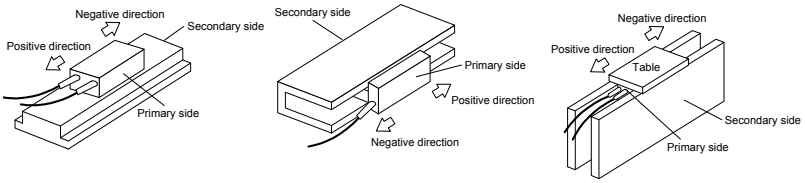

LM-H3/LM-F series LM-U2 series LM-K2 series

Setting range: 0, 1

No./ symbol/name	Setting digit	Function	Initial value [unit]	Network		
				ECT	EIP	PNT
PA15 *ENR Encoder output pulses		Set the encoder output pulses from the servo amplifier by using the number of output pulses per revolution, dividing ratio, or electronic gear ratio. (after multiplication by 4) Selecting "Dividing ratio setting (_ _ 1 _)" of "Encoder output pulse setting selection" in [Pr. PC03] will divide the travel distance [pulse] of the linear encoder by the setting value. Set a numerator of the electronic gear for the A/B-phase pulse output when selecting "A-phase/B-phase pulse electronic gear setting (_ _ 3 _)" of "Encoder output pulse setting selection" in [Pr. PC03]. The maximum output frequency is 4.6 Mpulses/s. Set the parameter within this range. Setting range: 1 to 4194304	4000 [pulse/ rev]	○	○	○
PA16 *ENR2 Encoder output pulses 2		Set a denominator of the electronic gear for the A/B-phase pulse output. Set a denominator of the electronic gear when selecting "A-phase/B-phase pulse electronic gear setting (_ _ 3 _)" of "Encoder output pulse setting selection" in [Pr. PC03]. Selecting "Dividing ratio setting (_ _ 1 _)" of "Encoder output pulse setting selection" in [Pr. PC03] will disable the setting value. Setting range: 1 to 4194304	1	○	○	○

No./ symbol/name	Setting digit	Function	Initial value [unit]	Network		
				ECT	EIP	PNT
PA17 **MSR Servo motor series setting		When using a linear servo motor, select any linear servo motor with [Pr. PA17] and [Pr. PA18]. Set this and [Pr. PA18] at a time. Refer to the following table for settings.	0000h	○	○	○

Linear servo motor series	Linear servo motor (Primary side)	Parameter	
		[Pr. PA17] setting	[Pr. PA18] setting
LM-H3	LM-H3P2A-07P-BSS0	00BBh	2101h
	LM-H3P3A-12P-CSS0		3101h
	LM-H3P3B-24P-CSS0		3201h
	LM-H3P3C-36P-CSS0		3301h
	LM-H3P3D-48P-CSS0		3401h
	LM-H3P7A-24P-ASS0		7101h
	LM-H3P7B-48P-ASS0		7201h
	LM-H3P7C-72P-ASS0		7301h
	LM-H3P7D-96P-ASS0		7401h
LM-U2	LM-U2PAB-05M-0SS0	00B4h	A201h
	LM-U2PAD-10M-0SS0		A401h
	LM-U2PAF-15M-0SS0		A601h
	LM-U2PBB-07M-1SS0		B201h
	LM-U2PBD-15M-1SS0		B401h
	LM-U2PBF-22M-1SS0		2601h
	LM-U2P2B-40M-2SS0		2201h
	LM-U2P2C-60M-2SS0		2301h
	LM-U2P2D-80M-2SS0		2401h
LM-F	LM-FP2B-06M-1SS0 (natural cooling)	00B2h	2201h
	LM-FP2D-12M-1SS0 (natural cooling)		2401h
	LM-FP2F-18M-1SS0 (natural cooling)		2601h
	LM-FP4B-12M-1SS0 (natural cooling)		4201h
	LM-FP4D-24M-1SS0 (natural cooling)		4401h
	LM-FP4F-36M-1SS0 (natural cooling)		4601h
	LM-FP4H-48M-1SS0 (natural cooling)		4801h
	LM-FP5H-60M-1SS0 (natural cooling)		5801h
	LM-FP2B-06M-1SS0 (liquid-cooling)		2202h
	LM-FP2D-12M-1SS0 (liquid-cooling)		2402h
	LM-FP2F-18M-1SS0 (liquid-cooling)		2602h
	LM-FP4B-12M-1SS0 (liquid-cooling)		4202h
	LM-FP4D-24M-1SS0 (liquid-cooling)		4402h
	LM-FP4F-36M-1SS0 (liquid-cooling)		4602h
	LM-FP4H-48M-1SS0 (liquid-cooling)		4802h
	LM-FP5H-60M-1SS0 (liquid-cooling)		5802h
LM-K2	LM-K2P1A-01M-2SS1	00B8h	1101h
	LM-K2P1C-03M-2SS1		1301h
	LM-K2P2A-02M-1SS1		2101h
	LM-K2P2C-07M-1SS1		2301h
	LM-K2P2E-12M-1SS1		2501h
	LM-K2P3C-14M-1SS1		3301h
	LM-K2P3E-24M-1SS1		3501h

PA18 **MTY Servo motor type setting		When using a linear servo motor, select any linear servo motor with [Pr. PA17] and [Pr. PA18]. Set this and [Pr. PA17] at a time. Refer to the table of [Pr. PA17] for settings.	0000h	○	○	○

No./ symbol/name	Setting digit	Function	Initial value [unit]	Network ECT	Network EIP	Network PNT
PA19 *BLK Parameter writing inhibit		Select a reference range and writing range of the parameter. Refer to table 5.4 for settings.	00ABh	○	○	○

Table 5.4 [Pr. PA19] setting value and reading/writing range

PA19	Setting operation	PA	PB	PC	PD	PE	PF	PL	PT	PN
Other than below	Reading	○								
	Writing	○								
000Ah	Reading	Only 19								
	Writing	Only 19								
000Bh	Reading	○	○	○						
	Writing	○	○	○						
000Ch	Reading	○	○	○	○					
	Writing	○	○	○	○					
000Fh	Reading	○	○	○	○	○		○		
	Writing	○	○	○	○	○		○		
00AAh	Reading	○	○	○	○	○	○			
	Writing	○	○	○	○	○	○			
00ABh (initial value)	Reading	○	○	○	○	○	○	○	○	○
	Writing	○	○	○	○	○	○	○	○	○
100Bh	Reading	○								
	Writing	Only 19								
100Ch	Reading	○	○	○	○					
	Writing	Only 19								
100Fh	Reading	○	○	○	○	○		○		
	Writing	Only 19								
10AAh	Reading	○	○	○	○	○	○			
	Writing	Only 19								
10ABh	Reading	○	○	○	○	○	○	○	○	○
	Writing	Only 19								

PA20 *TDS Tough drive setting	Alarms may not be avoided with the tough drive function depending on the situations of the power supply and load fluctuation. You can assign MTTR (During tough drive) to pins CN3-9, CN3-13, and CN3-15 with [Pr. PD07] to [Pr. PD09].					
	_ _ _ x	For manufacturer setting	0h			
	_ _ x _	Vibration tough drive selection 0: Disabled 1: Enabled Selecting "1" enables to suppress vibrations by automatically changing the setting values of [Pr. PB13 Machine resonance suppression filter 1] and [Pr. PB15 Machine resonance suppression filter 2] in case that the vibration exceeds the value of the oscillation level set in [Pr. PF23]. The parameter will operate when [Pr. PB13 Machine resonance suppression filter 1] and [Pr. PB15 Machine resonance suppression filter 2] are enabled. Refer to section 7.3 for details.	0h	○	○	○
	_ x _ _	SEMI-F47 function selection 0: Disabled 1: Enabled Selecting "1" enables to avoid triggering [AL. 10 Undervoltage] using the electrical energy charged in the capacitor in case that an instantaneous power failure occurs during operation. In [Pr. PF25 SEMI-F47 function - Instantaneous power failure detection time], set the time until the occurrence of [AL. 10.1 Voltage drop in the control circuit power].	0h	○	○	○
	x _ _ _	For manufacturer setting	0h			

No./ symbol/name	Setting digit	Function	Initial value [unit]	Network		
				ECT	EIP	PNT
PA21 *AOP3 Function selection A-3	_ _ _ x	One-touch tuning function selection 0: Disabled 1: Enabled When this digit is "0", the one-touch tuning will be disabled.	1h	○	○	○
	_ _ x _	For manufacturer setting	0h			
	_ x _ _		0h			
	x _ _ _		0h			
PA22 **PCS Position control composition selection	_ _ _ x	For manufacturer setting	0h			
	_ _ x _	Super trace control selection 0: Disabled 2: Enabled	0h	○	○	○
	_ x _ _	For manufacturer setting	0h			
	x _ _ _	Scale measurement function selection 0: Disabled 1: Used in absolute position detection system 2: Used in incremental system The absolute position detection system cannot be used while an incremental type encoder is used. Enabling absolute position detection system will trigger [AL. 37 Parameter error]. Additionally, the setting is enabled only in the standard control mode. Setting other than "0" in other operation modes triggers [AL. 37 Parameter error]. The setting of this digit is used by servo amplifier with software version B0 or later.	0h	○	○	
PA23 DRAT Drive recorder arbitrary alarm trigger setting	_ _ x x	Alarm detail No. setting Set the digits when you execute the trigger with arbitrary alarm detail No. for the drive recorder function. When these digits are "0 0", only the arbitrary alarm No. setting will be enabled.	00h	○	○	○
	x x _ _	Alarm No. setting Set the digits when you execute the trigger with arbitrary alarm No. for the drive recorder function. When "0 0" are set, arbitrary alarm trigger of the drive recorder will be disabled.	00h	○	○	○
	Setting example: To activate the drive recorder when [AL. 50 Overload 1] occurs, set "5 0 0 0". To activate the drive recorder when [AL. 50.3 Thermal overload error 4 during operation] occurs, set "5 0 0 3".					
PA24 AOP4 Function selection A-4	_ _ _ x	Vibration suppression mode selection 0: Standard mode 1: 3 inertia mode 2: Low response mode When you select the standard mode or low response mode, "Vibration suppression control 2" is not available. When you select the 3 inertia mode, the feed forward gain is not available. Before changing the control mode during the 3 inertia mode or low response mode, stop the motor.	0h	○	○	○
	_ _ x _	For manufacturer setting	0h			
	_ x _ _		0h			
	x _ _ _		0h			

No./ symbol/name	Setting digit	Function	Initial value [unit]	Network		
				ECT	EIP	PNT
PA25 OTHOV One-touch tuning - Overshoot permissible level		Set a permissible value of overshoot amount for one-touch tuning as a percentage of the in-position range. Note that setting "0" will be 50%. Setting range: 0 to 100	0 [%]	○	○	○
PA26 *AOP5 Function selection A-5	_ _ _ x	Torque limit function selection at instantaneous power failure 0: Disabled 1: Enabled When an instantaneous power failure occurs during operation, you can save electric energy charged in the capacitor in the servo amplifier by limiting torque at acceleration. You can also delay the time until [AL. 10.2 Voltage drop in the main circuit power] occurs with instantaneous power failure tough drive function. Doing this will enable you to set a longer time in [Pr. PF25 SEMI-F47 function - Instantaneous power failure detection time]. The torque limit function at instantaneous power failure is enabled when "SEMI-F47 function selection" in [Pr. PA20] is "Enabled (_ 1 _ _)".	0h	○	○	○
	_ _ x _	For manufacturer setting	0h			
	_ x _ _		0h			
	x _ _ _		0h			

5.2.2 Gain/filter setting parameters ([Pr. PB_ _])

No./ symbol/name	Setting digit	Function	Initial value [unit]	Network		
				ECT	EIP	PNT
PB01 FILT Adaptive tuning mode (adaptive filter II)	_ _ _ x	Filter tuning mode selection Set the adaptive tuning. Select the adjustment mode of the machine resonance suppression filter 1. Refer to section 7.1.2 for details. 0: Disabled 1: Automatic setting 2: Manual setting	0h	○	○	○
	_ _ x _	For manufacturer setting	0h			
	_ x _ _		0h			
	x _ _ _		0h			
PB02 VRFT Vibration suppression control tuning mode (advanced vibration suppression control II)	_ _ _ x	Vibration suppression control 1 tuning mode selection Select the tuning mode of the vibration suppression control 1. Refer to section 7.1.5 for details. 0: Disabled 1: Automatic setting 2: Manual setting	0h	○	○	○
	_ _ x _	Vibration suppression control 2 tuning mode selection Select the tuning mode of the vibration suppression control 2. To enable the digit, set "Vibration suppression mode selection" to "3 inertia mode (_ _ _ 1)" in [Pr. PA24]. Refer to section 7.1.5 for details. 0: Disabled 1: Automatic setting 2: Manual setting	0h	○	○	○
	_ x _ _	For manufacturer setting	0h			
	x _ _ _		0h			

No./ symbol/name	Setting digit	Function	Initial value [unit]	Network		
				ECT	EIP	PNT
PB04 FFC Feed forward gain		Set the feed forward gain. When the setting is 100%, the droop pulses during operation at constant speed will be almost 0. When the super trace control is enabled, constant speed and uniform acceleration/deceleration droop pulses will be almost 0. However, sudden acceleration/deceleration will increase the overshoot. As a guideline, when the feed forward gain setting is 100%, set 1 s or more for the acceleration time constant to the rated speed. Setting range: 0 to 100	0 [%]	○	○	○
PB06 GD2 Load to motor inertia ratio/load to motor mass ratio		Set a load to motor inertia ratio or load to motor mass ratio. Setting a value considerably different from the actual load moment of inertia or load mass may cause an unexpected operation such as an overshoot. The setting of this parameter will be automatic or manual depending on the setting of [Pr. PA08]. Refer to the following table for details. When the parameter is set to automatic, the value will vary between 0.00 and 100.00. Setting range: 0.00 to 300.00	7.00 [times]	○	○	○

Pr. PA08	This parameter
_ _ _ 0 (2 gain adjustment mode 1 (interpolation mode))	Automatic setting
_ _ _ 1: (Auto tuning mode 1)	
_ _ _ 2: (Auto tuning mode 2)	Manual setting
_ _ _ 3 (Manual mode)	
_ _ _ 4: (2 gain adjustment mode 2)	

PB07 PG1 Model loop gain		Set the response gain to the target position. Increasing the setting value will also increase the response level to the position command but will be liable to generate vibration and noise. For the vibration suppression control tuning mode, the setting range of [Pr. PB07] is limited. Refer to section 7.1.5 (4) for details. The setting of this parameter will be automatic or manual depending on the setting of [Pr. PA08]. Refer to the following table for details. Setting range: 1.0 to 2000.0	15.0 [rad/s]	○	○	○

Pr. PA08	This parameter
_ _ _ 0 (2 gain adjustment mode 1 (interpolation mode))	Manual setting
_ _ _ 1: (Auto tuning mode 1)	Automatic setting
_ _ _ 2: (Auto tuning mode 2)	
_ _ _ 3 (Manual mode)	Manual setting
_ _ _ 4: (2 gain adjustment mode 2)	

No./ symbol/name	Setting digit	Function	Initial value [unit]	Network		
				ECT	EIP	PNT
PB08 PG2 Position loop gain		Set the gain of the position loop. Set this parameter to increase the position response to level load disturbance. Increasing the setting value will also increase the response level to the load disturbance but will be liable to generate vibration and noise. The setting of this parameter will be automatic or manual depending on the setting of [Pr. PA08]. Refer to the following table for details. Setting range: 1.0 to 2000.0	37.0 [rad/s]	○	○	○
		Pr. PA08 / This parameter _ _ _ 0 (2 gain adjustment mode 1 (interpolation mode)) — Automatic setting _ _ _ 1: (Auto tuning mode 1) — Automatic setting _ _ _ 2: (Auto tuning mode 2) — Automatic setting _ _ _ 3 (Manual mode) — Manual setting _ _ _ 4: (2 gain adjustment mode 2) — Automatic setting				
PB09 VG2 Speed loop gain		Set the gain of the speed loop. Set this parameter when vibration occurs on machines of low rigidity or with large backlash. Increasing the setting value will also increase the response level but will be liable to generate vibration and noise. The setting of this parameter will be automatic or manual depending on the setting of [Pr. PA08]. Refer to the table of [Pr. PB08] for details. Setting range: 20 to 65535	823 [rad/s]	○	○	○
PB10 VIC Speed integral compensation		Set the integral time constant of the speed loop. Decreasing the setting value will increase the response level but will be liable to generate vibration and noise. The setting of this parameter will be automatic or manual depending on the setting of [Pr. PA08]. Refer to the table of [Pr. PB08] for details. Setting range: 0.1 to 1000.0	33.7 [ms]	○	○	○
PB11 VDC Speed differential compensation		Set the differential compensation. To enable the parameter at all times, select "Continuous PID control enabled (_ _ 3 _)" of "PI-PID switching control selection" in [Pr. PB24]. To enable it, turn on PC (Proportional control) or PID switching signal (C_PC) from controller. Setting range: 0 to 1000	980	○	○	○
PB12 OVA Overshoot amount compensation		Set a viscous friction torque in percentage to the rated torque at servo motor rated speed. Or, set a percentage of viscous friction force against the continuous thrust at linear servo motor rated speed. When the response level is low or when the torque/thrust is limited, the efficiency of the parameter may be lower. Setting range: 0 to 100	0 [%]	○	○	○
PB13 NH1 Machine resonance suppression filter 1		Set the notch frequency of the machine resonance suppression filter 1. When "Filter tuning mode selection" is set to "Automatic setting (_ _ _ 1)" in [Pr. PB01], this parameter will be adjusted automatically by adaptive tuning. When "Filter tuning mode selection" is set to "Manual setting (_ _ _ 2)" in [Pr. PB01], the setting value will be enabled. Setting range: 10 to 4500	4500 [Hz]	○	○	○

No./ symbol/name	Setting digit	Function	Initial value [unit]	Network		
				ECT	EIP	PNT
PB14 NHQ1 Notch shape selection 1	Set forms of the machine resonance suppression filter 1. When "Filter tuning mode selection" is set to "Automatic setting (_ _ _ 1)" in [Pr. PB01], this parameter will be adjusted automatically by adaptive tuning. When "Filter tuning mode selection" is set to "Manual setting (_ _ _ 2)" in [Pr. PB01], the setting value will be enabled.					
	_ _ _ x	For manufacturer setting	0h			
	_ _ x _	Notch depth selection 0: -40 dB 1: -14 dB 2: -8 dB 3: -4 dB	0h	○	○	○
	_ x _ _	Notch width selection 0: α = 2 1: α = 3 2: α = 4 3: α = 5	0h	○	○	○
	x _ _ _	For manufacturer setting	0h			
PB15 NH2 Machine resonance suppression filter 2		Set the notch frequency of the machine resonance suppression filter 2. To enable the setting value, select "Enabled (_ _ _ 1)" of "Machine resonance suppression filter 2 selection" in [Pr. PB16]. Setting range: 10 to 4500	4500 [Hz]	○	○	○
PB16 NHQ2 Notch shape selection 2	Set forms of the machine resonance suppression filter 2.					
	_ _ _ x	Machine resonance suppression filter 2 selection 0: Disabled 1: Enabled	0h	○	○	○
	_ _ x _	Notch depth selection 0: -40 dB 1: -14 dB 2: -8 dB 3: -4 dB	0h	○	○	○
	_ x _ _	Notch width selection 0: α = 2 1: α = 3 2: α = 4 3: α = 5	0h	○	○	○
	x _ _ _	For manufacturer setting	0h			

No./ symbol/name	Setting digit	Function	Initial value [unit]	Network ECT	Network EIP	Network PNT
PB17 NHF Shaft resonance suppression filter	Set the shaft resonance suppression filter. Use this to suppress a low-frequency machine vibration. When you select "Automatic setting (_ _ _ 0)" of "Shaft resonance suppression filter selection" in [Pr. PB23], the value will be calculated automatically from the servo motor you use and load to motor inertia ratio. It will not be automatically calculated for the linear servo motor. When "Manual setting (_ _ _ 1)" is selected, the setting written to the parameter is used. When "Shaft resonance suppression filter selection" is set to "Disabled (_ _ _ 2)" in [Pr. PB23], the setting value of this parameter will be disabled. When "Machine resonance suppression filter 4 selection" is set to "Enabled (_ _ _ 1)" in [Pr. PB49], the shaft resonance suppression filter is not available. When "Shaft resonance suppression filter selection" is set to "Disabled (_ _ _ 2)" in [Pr. PB23], the performance may be reduced.						
	_ _ x x	Shaft resonance suppression filter setting frequency selection Refer to table 5.5 for settings. Set the value closest to the frequency you need.	00h	○	○	○
	_ x _ _	Notch depth selection 0: -40 dB 1: -14 dB 2: -8 dB 3: -4 dB	0h	○	○	○
	x _ _ _	For manufacturer setting	0h			

Table 5.5 Shaft resonance suppression filter setting frequency selection

Setting value	Frequency [Hz]	Setting value	Frequency [Hz]
_ _ 0 0	Disabled	_ _ 1 0	562
_ _ 0 1	Disabled	_ _ 1 1	529
_ _ 0 2	4500	_ _ 1 2	500
_ _ 0 3	3000	_ _ 1 3	473
_ _ 0 4	2250	_ _ 1 4	450
_ _ 0 5	1800	_ _ 1 5	428
_ _ 0 6	1500	_ _ 1 6	409
_ _ 0 7	1285	_ _ 1 7	391
_ _ 0 8	1125	_ _ 1 8	375
_ _ 0 9	1000	_ _ 1 9	360
_ _ 0 A	900	_ _ 1 A	346
_ _ 0 B	818	_ _ 1 B	333
_ _ 0 C	750	_ _ 1 C	321
_ _ 0 D	692	_ _ 1 D	310
_ _ 0 E	642	_ _ 1 E	300
_ _ 0 F	600	_ _ 1 F	290

PB18 LPF Low-pass filter setting		Set the low-pass filter. The following shows a relation of a required parameter to this parameter. Setting range: 100 to 18000	3141 [rad/s]	○	○	○

[Pr. PB23]	[Pr. PB18]
_ _ 0 _ (Initial value)	Automatic setting
_ _ 1 _	Setting value enabled
_ _ 2 _	Setting value disabled

No./ symbol/name	Setting digit	Function	Initial value [unit]	Network		
				ECT	EIP	PNT
PB19 VRF11 Vibration suppression control 1 - Vibration frequency		Set the vibration frequency for vibration suppression control 1 to suppress low-frequency machine vibration. When "Vibration suppression control 1 tuning mode selection" is set to "Automatic setting (_ _ _ 1)" in [Pr. PB02], this parameter will be set automatically. When "Manual setting (_ _ _ 2)" is selected, the setting written to the parameter is used. The setting range of this parameter varies, depending on the value in [Pr. PB07]. If a value out of the range is set, the vibration suppression control will be disabled. Refer to section 7.1.5 for details. Setting range: 0.1 to 300.0	100.0 [Hz]	○	○	○
PB20 VRF12 Vibration suppression control 1 - Resonance frequency		Set the resonance frequency for vibration suppression control 1 to suppress low-frequency machine vibration. When "Vibration suppression control 1 tuning mode selection" is set to "Automatic setting (_ _ _ 1)" in [Pr. PB02], this parameter will be set automatically. When "Manual setting (_ _ _ 2)" is selected, the setting written to the parameter is used. The setting range of this parameter varies, depending on the value in [Pr. PB07]. If a value out of the range is set, the vibration suppression control will be disabled. Refer to section 7.1.5 for details. Setting range: 0.1 to 300.0	100.0 [Hz]	○	○	○
PB21 VRF13 Vibration suppression control 1 - Vibration frequency damping		Set a damping of the vibration frequency for vibration suppression control 1 to suppress low-frequency machine vibration. When "Vibration suppression control 1 tuning mode selection" is set to "Automatic setting (_ _ _ 1)" in [Pr. PB02], this parameter will be set automatically. When "Manual setting (_ _ _ 2)" is selected, the setting written to the parameter is used. Refer to section 7.1.5 for details. Setting range: 0.00 to 0.30	0.00	○	○	○
PB22 VRF14 Vibration suppression control 1 - Resonance frequency damping		Set a damping of the resonance frequency for vibration suppression control 1 to suppress low-frequency machine vibration. When "Vibration suppression control 1 tuning mode selection" is set to "Automatic setting (_ _ _ 1)" in [Pr. PB02], this parameter will be set automatically. When "Manual setting (_ _ _ 2)" is selected, the setting written to the parameter is used. Refer to section 7.1.5 for details. Setting range: 0.00 to 0.30	0.00	○	○	○
PB23 VFBF Low-pass filter selection	_ _ _ x	Shaft resonance suppression filter selection Select the shaft resonance suppression filter. 0: Automatic setting 1: Manual setting 2: Disabled When you select "Enabled (_ _ _ 1)" of "Machine resonance suppression filter 4 selection" in [Pr. PB49], the shaft resonance suppression filter is not available.	0h	○	○	○
	_ _ x _	Low-pass filter selection Select the low-pass filter. 0: Automatic setting 1: Manual setting 2: Disabled	0h	○	○	○
	_ x _ _	For manufacturer setting	0h			
	x _ _ _		0h			

No./ symbol/name	Setting digit	Function	Initial value [unit]	Network		
				ECT	EIP	PNT
PB24 *MVS Slight vibration suppression control	_ _ _ x	Slight vibration suppression control selection Select the slight vibration suppression control. 0: Disabled 1: Enabled To enable the slight vibration suppression control, set "Gain adjustment mode selection" to "Manual mode (_ _ _ 3)" in [Pr. PA08]. Slight vibration suppression control selection cannot be used in the velocity mode.	0h	○	○	○
	_ _ x _	PI-PID switching control selection 0: PI control enabled (Switching is enabled by PID switching signal from controller (C_PC) and Input device PC (Proportional control).) 3: Continuous PID control enabled If the servo motor at a stop is rotated even for a pulse due to any external factor, it generates torque to compensate for a position shift. When the servo motor shaft is to be locked mechanically after positioning completion (stop), enabling PID control and completing positioning simultaneously will suppress the unnecessary torque generated to compensate for a position shift.	0h	○	○	○
	_ x _ _	For manufacturer setting	0h			
	x _ _ _		0h			
PB25 *BOP1 Function selection B-1	_ _ _ x	Model adaptive control selection 0: Enabled (model adaptive control) 2: Disabled (PID control) Refer to section 7.5 for details.	0h	○	○	○
	_ _ x _	For manufacturer setting	0h			
	_ x _ _		0h			
	x _ _ _		0h			
PB26 *CDP Gain switching function	Select a gain switching condition. Set conditions to enable the gain switching values set in [Pr. PB29] to [Pr. PB36] and [Pr. PB56] to [Pr. PB60].					
	_ _ _ x	Gain switching selection 0: Disabled 1: Switching is enabled by control command from controller (C_CDP) and Input device CDP (Gain switching). 2: Command frequency 3: Droop pulses 4: Servo motor speed	0h	○	○	○
	_ _ x _	Gain switching condition selection 0: Gain after switching is enabled with gain switching condition or more 1: Gain after switching is enabled with gain switching condition or less	0h	○	○	○
	_ x _ _	Gain switching time constant disabling condition selection 0: Switching time constant enabled 1: Switching time constant disabled 2: Return time constant disabled Refer to section 7.2.4 for details.	0h	○	○	○
	x _ _ _	For manufacturer setting	0h			
PB27 CDL Gain switching condition		This is used to set the value of gain switching (command frequency, droop pulses, and servo motor speed) selected in [Pr. PB26]. The set value unit differs depending on the switching condition item. (Refer to section 7.2.3.) The unit "r/min" will be "mm/s" for linear servo motors. Setting range: 0 to 65535	10 [kpulse/s]/ [pulse]/ [r/min]	○	○	○
PB28 CDT Gain switching time constant		Set the time constant until the gains switch in response to the conditions set in [Pr. PB26] and [Pr. PB27]. Setting range: 0 to 100	1 [ms]	○	○	○

No./ symbol/name	Setting digit	Function	Initial value [unit]	Network		
				ECT	EIP	PNT
PB29 GD2B Load to motor inertia ratio/load to motor mass ratio after gain switching		Set a load to motor inertia ratio/load to motor mass ratio for when gain switching is enabled. This parameter is enabled only when "Gain adjustment mode selection" is set to "Manual mode (_ _ _ 3)" in [Pr. PA08]. Setting range: 0.00 to 300.00	7.00 [times]	○	○	○
PB30 PG2B Position loop gain after gain switching		Set the position loop gain for when the gain switching is enabled. When a value less than 1.0 rad/s is set, the value will be the same as that of [Pr. PB08]. This parameter is enabled only when "Gain adjustment mode selection" is set to "Manual mode (_ _ _ 3)" in [Pr. PA08]. Setting range: 0.0 to 2000.0	0.0 [rad/s]	○	○	○
PB31 VG2B Speed loop gain after gain switching		Set the speed loop gain for when the gain switching is enabled. When a value less than 20 rad/s is set, the value will be the same as that of [Pr. PB09]. This parameter is enabled only when "Gain adjustment mode selection" is set to "Manual mode (_ _ _ 3)" in [Pr. PA08]. Setting range: 0 to 65535	0 [rad/s]	○	○	○
PB32 VICB Speed integral compensation after gain switching		Set the speed integral compensation for when the gain switching is enabled. When a value less than 0.1 ms is set, the value will be the same as that of [Pr. PB10]. This parameter is enabled only when "Gain adjustment mode selection" is set to "Manual mode (_ _ _ 3)" in [Pr. PA08]. Setting range: 0.0 to 5000.0	0.0 [ms]	○	○	○
PB33 VRF11B Vibration suppression control 1 - Vibration frequency after gain switching		Set the vibration frequency of the vibration suppression control 1 for when the gain switching is enabled. When a value less than 0.1 Hz is set, the value will be the same as that of [Pr. PB19]. This parameter is enabled only when the following conditions are fulfilled. ・"Gain adjustment mode selection" is set to "Manual mode (_ _ _ 3)" in [Pr. PA08]. ・"Vibration suppression control 1 tuning mode selection" is set to "Manual setting (_ _ _ 2)" in [Pr. PB02]. ・"Gain switching selection" is set to "Switching is enabled by control command from controller (C_CDP) and Input device CDP (Gain switching). (_ _ _ 1)" in [Pr. PB26]. Switching during driving may cause a shock. Be sure to switch them after the servo motor stops. Setting range: 0.0 to 300.0	0.0 [Hz]	○	○	○
PB34 VRF12B Vibration suppression control 1 - Resonance frequency after gain switching		Set the resonance frequency for vibration suppression control 1 for when the gain switching is enabled. When a value less than 0.1 Hz is set, the value will be the same as that of [Pr. PB20]. This parameter will be enabled only when the following conditions are fulfilled. ・"Gain adjustment mode selection" is set to "Manual mode (_ _ _ 3)" in [Pr. PA08]. ・"Vibration suppression control 1 tuning mode selection" is set to "Manual setting (_ _ _ 2)" in [Pr. PB02]. ・"Gain switching selection" is set to "Switching is enabled by control command from controller (C_CDP) and Input device CDP (Gain switching). (_ _ _ 1)" in [Pr. PB26]. Switching during driving may cause a shock. Be sure to switch them after the servo motor stops. Setting range: 0.0 to 300.0	0.0 [Hz]	○	○	○

No./ symbol/name	Setting digit	Function	Initial value [unit]	Network		
				ECT	EIP	PNT
PB35 VRF13B Vibration suppression control 1 - Vibration frequency damping after gain switching		Set a damping of the vibration frequency for vibration suppression control 1 when the gain switching is enabled. This parameter will be enabled only when the following conditions are fulfilled. ・"Gain adjustment mode selection" is set to "Manual mode (_ _ _ 3)" in [Pr. PA08]. ・"Vibration suppression control 1 tuning mode selection" is set to "Manual setting (_ _ _ 2)" in [Pr. PB02]. ・"Gain switching selection" is set to "Switching is enabled by control command from controller (C_CDP) and Input device CDP (Gain switching). (_ _ _ 1)" in [Pr. PB26]. Switching during driving may cause a shock. Be sure to switch them after the servo motor stops. Setting range: 0.00 to 0.30	0.00	○	○	○
PB36 VRF14B Vibration suppression control 1 - Resonance frequency damping after gain switching		Set a damping of the resonance frequency for vibration suppression control 1 when the gain switching is enabled. This parameter will be enabled only when the following conditions are fulfilled. ・"Gain adjustment mode selection" is set to "Manual mode (_ _ _ 3)" in [Pr. PA08]. ・"Vibration suppression control 1 tuning mode selection" is set to "Manual setting (_ _ _ 2)" in [Pr. PB02]. ・"Gain switching selection" is set to "Switching is enabled by control command from controller (C_CDP) and Input device CDP (Gain switching). (_ _ _ 1)" in [Pr. PB26]. Switching during driving may cause a shock. Be sure to switch them after the servo motor stops. Setting range: 0.00 to 0.30	0.00	○	○	○

No./ symbol/name	Setting digit	Function	Initial value [unit]	Network		
				ECT	EIP	PNT
PB45 CNHF Command notch filter	Set the command notch filter.					
	_ _ x x	Command notch filter setting frequency selection Refer to table 5.6 for the relation of setting values to frequency.	00h	○	○	○
	_ x _ _	Notch depth selection Refer to table 5.7 for details.	0h	○	○	○
	x _ _ _	For manufacturer setting	0h			

Table 5.6 Command notch filter setting frequency selection

Setting value	Frequency [Hz]	Setting value	Frequency [Hz]	Setting value	Frequency [Hz]
_ _ 0 0	Disabled	_ _ 2 0	70	_ _ 4 0	17.6
_ _ 0 1	2250	_ _ 2 1	66	_ _ 4 1	16.5
_ _ 0 2	1125	_ _ 2 2	62	_ _ 4 2	15.6
_ _ 0 3	750	_ _ 2 3	59	_ _ 4 3	14.8
_ _ 0 4	562	_ _ 2 4	56	_ _ 4 4	14.1
_ _ 0 5	450	_ _ 2 5	53	_ _ 4 5	13.4
_ _ 0 6	375	_ _ 2 6	51	_ _ 4 6	12.8
_ _ 0 7	321	_ _ 2 7	48	_ _ 4 7	12.2
_ _ 0 8	281	_ _ 2 8	46	_ _ 4 8	11.7
_ _ 0 9	250	_ _ 2 9	45	_ _ 4 9	11.3
_ _ 0 A	225	_ _ 2 A	43	_ _ 4 A	10.8
_ _ 0 B	204	_ _ 2 B	41	_ _ 4 B	10.4
_ _ 0 C	187	_ _ 2 C	40	_ _ 4 C	10
_ _ 0 D	173	_ _ 2 D	38	_ _ 4 D	9.7
_ _ 0 E	160	_ _ 2 E	37	_ _ 4 E	9.4
_ _ 0 F	150	_ _ 2 F	36	_ _ 4 F	9.1
_ _ 1 0	140	_ _ 3 0	35.2	_ _ 5 0	8.8
_ _ 1 1	132	_ _ 3 1	33.1	_ _ 5 1	8.3
_ _ 1 2	125	_ _ 3 2	31.3	_ _ 5 2	7.8
_ _ 1 3	118	_ _ 3 3	29.6	_ _ 5 3	7.4
_ _ 1 4	112	_ _ 3 4	28.1	_ _ 5 4	7.0
_ _ 1 5	107	_ _ 3 5	26.8	_ _ 5 5	6.7
_ _ 1 6	102	_ _ 3 6	25.6	_ _ 5 6	6.4
_ _ 1 7	97	_ _ 3 7	24.5	_ _ 5 7	6.1
_ _ 1 8	93	_ _ 3 8	23.4	_ _ 5 8	5.9
_ _ 1 9	90	_ _ 3 9	22.5	_ _ 5 9	5.6
_ _ 1 A	86	_ _ 3 A	21.6	_ _ 5 A	5.4
_ _ 1 B	83	_ _ 3 B	20.8	_ _ 5 B	5.2
_ _ 1 C	80	_ _ 3 C	20.1	_ _ 5 C	5.0
_ _ 1 D	77	_ _ 3 D	19.4	_ _ 5 D	4.9
_ _ 1 E	75	_ _ 3 E	18.8	_ _ 5 E	4.7
_ _ 1 F	72	_ _ 3 F	18.2	_ _ 5 F	4.5

Table 5.7 Notch depth selection

Setting value	Depth [dB]	Setting value	Depth [dB]
_ 0 _ _	-40.0	_ 8 _ _	-6.0
_ 1 _ _	-24.1	_ 9 _ _	-5.0
_ 2 _ _	-18.1	_ A _ _	-4.1
_ 3 _ _	-14.5	_ B _ _	-3.3
_ 4 _ _	-12.0	_ C _ _	-2.5
_ 5 _ _	-10.1	_ D _ _	-1.8
_ 6 _ _	-8.5	_ E _ _	-1.2
_ 7 _ _	-7.2	_ F _ _	-0.6

No./ symbol/name	Setting digit	Function	Initial value [unit]	Network		
				ECT	EIP	PNT
PB46 NH3 Machine resonance suppression filter 3		Set the notch frequency of the machine resonance suppression filter 3. To enable the setting value, set "Machine resonance suppression filter 3 selection" to "Enabled (_ _ _ 1)" in [Pr. PB47]. Setting range: 10 to 4500	4500 [Hz]	○	○	○
PB47 NHQ3 Notch shape selection 3	Set forms of the machine resonance suppression filter 3.					
	_ _ _ x	Machine resonance suppression filter 3 selection 0: Disabled 1: Enabled	0h	○	○	○
	_ _ x _	Notch depth selection 0: -40 dB 1: -14 dB 2: -8 dB 3: -4 dB	0h	○	○	○
	_ x _ _	Notch width selection 0: α = 2 1: α = 3 2: α = 4 3: α = 5	0h	○	○	○
	x _ _ _	For manufacturer setting	0h			
PB48 NH4 Machine resonance suppression filter 4		Set the notch frequency of the machine resonance suppression filter 4. To enable the setting value, set "Machine resonance suppression filter 4 selection" to "Enabled (_ _ _ 1)" in [Pr. PB49]. Setting range: 10 to 4500	4500 [Hz]	○	○	○
PB49 NHQ4 Notch shape selection 4	Set forms of the machine resonance suppression filter 4.					
	_ _ _ x	Machine resonance suppression filter 4 selection 0: Disabled 1: Enabled When "Enabled" is set, [Pr. PB17 Shaft resonance suppression filter] is not available.	0h	○	○	○
	_ _ x _	Notch depth selection 0: -40 dB 1: -14 dB 2: -8 dB 3: -4 dB	0h	○	○	○
	_ x _ _	Notch width selection 0: α = 2 1: α = 3 2: α = 4 3: α = 5	0h	○	○	○
	x _ _ _	For manufacturer setting	0h			
PB50 NH5 Machine resonance suppression filter 5		Set the notch frequency of the machine resonance suppression filter 5. To enable the setting value, set "Machine resonance suppression filter 5 selection" to "Enabled (_ _ _ 1)" in [Pr. PB51]. Setting range: 10 to 4500	4500 [Hz]	○	○	○

No./ symbol/name	Setting digit	Function	Initial value [unit]	Network		
				ECT	EIP	PNT
PB51 NHQ5 Notch shape selection 5	Set forms of the machine resonance suppression filter 5. When "Robust filter selection" is set to "Enabled (_ _ _ 1)" in [Pr. PE41], the machine resonance suppression filter 5 is not available.					
	_ _ _ x	Machine resonance suppression filter 5 selection 0: Disabled 1: Enabled	0h	○	○	○
	_ _ x _	Notch depth selection 0: -40 dB 1: -14 dB 2: -8 dB 3: -4 dB	0h	○	○	○
	_ x _ _	Notch width selection 0: α = 2 1: α = 3 2: α = 4 3: α = 5	0h	○	○	○
	x _ _ _	For manufacturer setting	0h			
PB52 VRF21 Vibration suppression control 2 - Vibration frequency		Set the vibration frequency for vibration suppression control 2 to suppress low-frequency machine vibration. When "Vibration suppression control 2 tuning mode selection" is set to "Automatic setting (_ _ 1 _)" in [Pr. PB02], this parameter will be set automatically. When "Manual setting (_ _ 2 _)" is selected, the setting written to the parameter is used. The setting range of this parameter varies, depending on the value in [Pr. PB07]. If a value out of the range is set, the vibration suppression control will be disabled. Refer to section 7.1.5 for details. To enable the setting value, set "Vibration suppression mode selection" to "3 inertia mode (_ _ _ 1)" in [Pr. PA24]. Setting range: 0.1 to 300.0	100.0 [Hz]	○	○	○
PB53 VRF22 Vibration suppression control 2 - Resonance frequency		Set the resonance frequency for vibration suppression control 2 to suppress low-frequency machine vibration. When "Vibration suppression control 2 tuning mode selection" is set to "Automatic setting (_ _ 1 _)" in [Pr. PB02], this parameter will be set automatically. When "Manual setting (_ _ 2 _)" is selected, the setting written to the parameter is used. The setting range of this parameter varies, depending on the value in [Pr. PB07]. If a value out of the range is set, the vibration suppression control will be disabled. Refer to section 7.1.5 for details. To enable the setting value, set "Vibration suppression mode selection" to "3 inertia mode (_ _ _ 1)" in [Pr. PA24]. Setting range: 0.1 to 300.0	100.0 [Hz]	○	○	○
PB54 VRF23 Vibration suppression control 2 - Vibration frequency damping		Set a damping of the vibration frequency for vibration suppression control 2 to suppress low-frequency machine vibration. When "Vibration suppression control 2 tuning mode selection" is set to "Automatic setting (_ _ 1 _)" in [Pr. PB02], this parameter will be set automatically. When "Manual setting (_ _ 2 _)" is selected, the setting written to the parameter is used. Refer to section 7.1.5 for details. To enable the setting value, set "Vibration suppression mode selection" to "3 inertia mode (_ _ _ 1)" in [Pr. PA24]. Setting range: 0.00 to 0.30	0.00	○	○	○
PB55 VRF24 Vibration suppression control 2 - Resonance frequency damping		Set a damping of the resonance frequency for vibration suppression control 2 to suppress low-frequency machine vibration. When "Vibration suppression control 2 tuning mode selection" is set to "Automatic setting (_ _ 1 _)" in [Pr. PB02], this parameter will be set automatically. When "Manual setting (_ _ 2 _)" is selected, the setting written to the parameter is used. Refer to section 7.1.5 for details. To enable the setting value, set "Vibration suppression mode selection" to "3 inertia mode (_ _ _ 1)" in [Pr. PA24]. Setting range: 0.00 to 0.30	0.00	○	○	○

No./ symbol/name	Setting digit	Function	Initial value [unit]	Network		
				ECT	EIP	PNT
PB56 VRF21B Vibration suppression control 2 - Vibration frequency after gain switching		Set the vibration frequency for vibration suppression control 2 for when the gain switching is enabled. When a value less than 0.1 Hz is set, the value will be the same as that of [Pr. PB52]. This parameter will be enabled only when the following conditions are fulfilled. ・"Gain adjustment mode selection" is set to "Manual mode (_ _ _ 3)" in [Pr. PA08]. ・"Vibration suppression mode selection" is set to "3 inertia mode (_ _ _ 1)" in [Pr. PA24]. ・"Vibration suppression control 2 tuning mode selection" is set to "Manual setting (_ _ 2 _)" in [Pr. PB02]. ・"Gain switching selection" is set to "Switching is enabled by control command from controller (C_CDP) and Input device CDP (Gain switching). (_ _ _ 1)" in [Pr. PB26]. Switching during driving may cause a shock. Be sure to switch them after the servo motor stops. Setting range: 0.0 to 300.0	0.0 [Hz]	○	○	○
PB57 VRF22B Vibration suppression control 2 - Resonance frequency after gain switching		Set the resonance frequency for vibration suppression control 2 for when the gain switching is enabled. When a value less than 0.1 Hz is set, the value will be the same as that of [Pr. PB53]. This parameter will be enabled only when the following conditions are fulfilled. ・"Gain adjustment mode selection" is set to "Manual mode (_ _ _ 3)" in [Pr. PA08]. ・"Vibration suppression mode selection" is set to "3 inertia mode (_ _ _ 1)" in [Pr. PA24]. ・"Vibration suppression control 2 tuning mode selection" is set to "Manual setting (_ _ 2 _)" in [Pr. PB02]. ・"Gain switching selection" is set to "Switching is enabled by control command from controller (C_CDP) and Input device CDP (Gain switching). (_ _ _ 1)" in [Pr. PB26]. Switching during driving may cause a shock. Be sure to switch them after the servo motor stops. Setting range: 0.0 to 300.0	0.0 [Hz]	○	○	○
PB58 VRF23B Vibration suppression control 2 - Vibration frequency damping after gain switching		Set a damping of the vibration frequency for vibration suppression control 2 when the gain switching is enabled. This parameter will be enabled only when the following conditions are fulfilled. ・"Gain adjustment mode selection" is set to "Manual mode (_ _ _ 3)" in [Pr. PA08]. ・"Vibration suppression mode selection" is set to "3 inertia mode (_ _ _ 1)" in [Pr. PA24]. ・"Vibration suppression control 2 tuning mode selection" is set to "Manual setting (_ _ 2 _)" in [Pr. PB02]. ・"Gain switching selection" is set to "Switching is enabled by control command from controller (C_CDP) and Input device CDP (Gain switching). (_ _ _ 1)" in [Pr. PB26]. Switching during driving may cause a shock. Be sure to switch them after the servo motor stops. Setting range: 0.00 to 0.30	0.00	○	○	○
PB59 VRF24B Vibration suppression control 2 - Resonance frequency damping after gain switching		Set a damping of the resonance frequency for vibration suppression control 2 when the gain switching is enabled. This parameter will be enabled only when the following conditions are fulfilled. ・"Gain adjustment mode selection" is set to "Manual mode (_ _ _ 3)" in [Pr. PA08]. ・"Vibration suppression mode selection" is set to "3 inertia mode (_ _ _ 1)" in [Pr. PA24]. ・"Vibration suppression control 2 tuning mode selection" is set to "Manual setting (_ _ 2 _)" in [Pr. PB02]. ・"Gain switching selection" is set to "Switching is enabled by control command from controller (C_CDP) and Input device CDP (Gain switching). (_ _ _ 1)" in [Pr. PB26]. Switching during driving may cause a shock. Be sure to switch them after the servo motor stops. Setting range: 0.00 to 0.30	0.00	○	○	○

No./ symbol/name	Setting digit	Function	Initial value [unit]	Network		
				ECT	EIP	PNT
PB60 PG1B Model loop gain after gain switching		Set the model loop gain for when the gain switching is enabled. When a value less than 1.0 rad/s is set, the value will be the same as that of [Pr. PB07]. This parameter will be enabled only when the following conditions are fulfilled. ・"Gain adjustment mode selection" is set to "Manual mode (_ _ _ 3)" in [Pr. PA08]. ・"Gain switching selection" is set to "Switching is enabled by control command from controller (C_CDP) and Input device CDP (Gain switching). (_ _ _ 1)" in [Pr. PB26]. Switching during driving may cause a shock. Be sure to switch them after the servo motor stops. Setting range: 0.0 to 2000.0	0.0 [rad/s]	○	○	○

5.2.3 Extension setting parameters ([Pr. PC_ _])

No./ symbol/name	Setting digit	Function	Initial value [unit]	Network		
				ECT	EIP	PNT
PC01 ERZ Error excessive alarm level		Set an error excessive alarm level. The setting unit can be changed with "Error excessive alarm/error excessive warning level unit selection" in [Pr. PC06]. Set this per rev. for rotary servo motors and direct drive motors. When "0" is set, 3 rev will be applied. Setting over 200 rev will be clamped to 200 rev. Set this per mm for linear servo motors. Setting "0" will be 100 mm. Setting range: 0 to 1000	0 [rev]/ [mm]	○	○	○
PC02 MBR Electromagnetic brake sequence output		Set the delay time from when MBR (Electromagnetic brake interlock) turns off until when the base drive circuit is shut-off. Setting range: 0 to 1000	0 [ms]	○	○	○

No./ symbol/name	Setting digit	Function	Initial value [unit]	Network		
				ECT	EIP	PNT
PC03 *ENRS Encoder output pulse selection	_ _ _ x	Encoder output pulse phase selection Select an encoder pulse direction. 0: Increasing A-phase 90° in CCW or positive direction 1: Increasing A-phase 90° in CW or negative direction Setting value: 0 Servo motor rotation direction/linear servo motor travel direction: CCW or positive direction 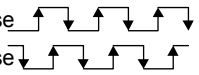 CW or negative direction 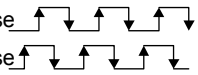 Setting value: 1 CCW or positive direction 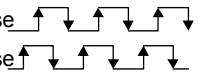 CW or negative direction 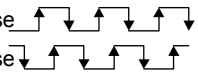 	0h	○	○	○
	_ _ x _	Encoder output pulse setting selection 0: Output pulse setting When "_ 1 0 _" is set to this parameter, [AL. 37 Parameter error] will occur. 1: Division ratio setting The setting of [Pr. PA16 Encoder output pulses 2] will be disabled. 3: A-phase/B-phase pulse electronic gear setting 4: A/B-phase pulse through output setting The settings of [Pr. PA15 Encoder output pulses] and [Pr. PA16 Encoder output pulses 2] will be disabled. "Encoder output pulse phase selection (_ _ _ x)" will be disabled. The setting will be enabled only when A/B/Z-phase differential output linear encoder is used. When another encoder is connected, [AL. 37 Parameter error] will occur. Setting "Standard control mode (_ _ 0 _)" in [Pr. PA01] will trigger [AL. 37 Parameter error]. For linear servo motors, selecting "0" will output as division ratio setting because the output pulse setting is not available.	0h	○	○	○
	_ x _ _	Selection of the encoders for encoder output pulse Select an encoder used for the encoder output pulses which the servo amplifier outputs. 0: Servo motor encoder 1: Load-side encoder When "_ 1 0 _" is set to this parameter, [AL. 37 Parameter error] will occur. This is only for the fully closed loop system. If "1" is set other than in the fully closed loop system, [AL. 37 Parameter error] will occur.	0h	○	○	○
	x _ _ _	For manufacturer setting	0h			
PC04 **COP1 Function selection C-1	_ _ _ x	For manufacturer setting	0h			
	_ _ x _		0h			
	_ x _ _		0h			
	x _ _ _	Encoder cable communication method selection Select how to execute the encoder cable communication method. 0: Two-wire type 1: Four-wire type When using an encoder of A/B/Z-phase differential output method, set "0". If the setting is incorrect, [AL. 16 Encoder initial communication error 1] or [AL. 20 Encoder normal communication error 1] occurs.	0h	○	○	○

No./ symbol/name	Setting digit	Function	Initial value [unit]	Network		
				ECT	EIP	PNT
PC05 **COP2 Function selection C-2	_ _ _ x	Motor-less operation selection Set the motor-less operation. The motor-less operation cannot be used in the fully closed loop control mode, linear servo motor control mode, or DD motor control mode. 0: Disabled 1: Enabled	0h	○	○	○
	_ _ x _	For manufacturer setting	0h			
	_ x _ _		0h			
	x _ _ _		0h			
PC06 *COP3 Function selection C-3	_ _ _ x	In-position range unit selection Select a unit of in-position range. 0: Command input pulse unit 1: Servo motor encoder pulse unit	0h	○	○	○
	_ _ x _	For manufacturer setting	0h			
	_ x _ _		0h			
	x _ _ _	Error excessive alarm/error excessive warning level unit selection Select units for error excessive alarm level setting with [Pr. PC01] and for error excessive warning level setting with [Pr. PC38]. 0: Per 1 rev or 1 mm 1: Per 0.1 rev or 0.1 mm 2: Per 0.01 rev or 0.01 mm 3: Per 0.001 rev or 0.001 mm	0h	○	○	○
PC07 ZSP Zero speed		Set an output range of ZSP (Zero speed detection). ZSP (Zero speed detection) has hysteresis of 20 r/min or 20 mm/s. Setting range: 0 to 10000	50 [r/min]/ [mm/s]	○	○	○
PC08 OSL Overspeed alarm detection level		Set an overspeed alarm detection level. When you set a value more than "servo motor maximum speed × 120%", the set value will be clamped. When you set "0", the value of "servo motor maximum speed × 120%" will be set. Setting range: 0 to 20000	0 [r/min]/ [mm/s]	○	○	○

No./ symbol/name	Setting digit	Function	Initial value [unit]	Network		
				ECT	EIP	PNT
PC09 MOD1 Analog monitor 1 output	_ _ x x	Analog monitor 1 output selection Select a signal to output to MO1 (Analog monitor 1). Refer to app. 8.3 for detection point of output selection. Refer to table 5.8 for settings.	00h	○	○	○
	_ x _ _	For manufacturer setting	0h			
	x _ _ _		0h			

Table 5.8 Analog monitor setting value

Setting value	Item	Operation mode (Note 1)			
		Standard	Full.	Lin.	DD
_ _ 0 0	Servo motor speed (±8 V/max. speed)	○	○	○	○
_ _ 0 1	Torque or thrust (±8 V/max. torque or max. thrust) (Note 3)	○	○	○	○
_ _ 0 2	Servo motor speed (+8 V/max. speed)	○	○	○	○
_ _ 0 3	Torque or thrust (+8 V/max. torque or max. thrust) (Note 3)	○	○	○	○
_ _ 0 4	Current command (±8 V/max. current command)	○	○	○	○
_ _ 0 5	Speed command (±8 V/max. speed)	○	○	○	○
_ _ 0 6	Servo motor-side droop pulses (±10 V/100 pulses) (Note 2)	○	○	○	○
_ _ 0 7	Servo motor-side droop pulses (±10 V/1000 pulses) (Note 2)	○	○	○	○
_ _ 0 8	Servo motor-side droop pulses (±10 V/10000 pulses) (Note 2)	○	○	○	○
_ _ 0 9	Servo motor-side droop pulses (±10 V/100000 pulses) (Note 2)	○	○	○	○
_ _ 0 D	Bus voltage (200 V class and 100 V class: +8 V/400 V, 400 V class: +8 V/800 V)	○	○	○	○
_ _ 0 E	Speed command 2 (±8 V/max. speed)	○	○	○	○
_ _ 1 0	Load-side droop pulses (±10 V/100 pulses) (Note 2)		○		
_ _ 1 1	Load-side droop pulses (±10 V/1000 pulses) (Note 2)		○		
_ _ 1 2	Load-side droop pulses (±10 V/10000 pulses) (Note 2)		○		
_ _ 1 3	Load-side droop pulses (±10 V/100000 pulses) (Note 2)		○		
_ _ 1 4	Load-side droop pulses (±10 V/1 Mpulses) (Note 2)		○		
_ _ 1 5	Servo motor-side/load-side position deviation (±10 V/100000 pulses)		○		
_ _ 1 6	Servo motor-side/load-side speed deviation (±8 V/max. speed)		○		
_ _ 1 7	Internal temperature of encoder (±10 V/±128 °C)	○	○		○

Note 1. Items with ○ are available for each operation mode.
Standard: Standard (semi closed loop system) use of the rotary servo motor
Full.: Fully closed loop system use of the rotary servo motor
Lin.: Linear servo motor use
DD: Direct drive (DD) motor use
2. Encoder pulse unit
3. The value in [Pr. PA11] or [Pr. PA12] whichever is higher is applied for the maximum torque or maximum thrust.

No./ symbol/name	Setting digit	Function	Initial value [unit]	Network		
				ECT	EIP	PNT
PC10 MOD2 Analog monitor 2 output	_ _ x x	Analog monitor 2 output selection Select a signal to output to MO2 (Analog monitor 2). Refer to app. 8.3 for detection point of output selection. Refer to [Pr. PC09] for settings.	01h	○	○	○
	_ x _ _	For manufacturer setting	0h			
	x _ _ _		0h			
PC11 MO1 Analog monitor 1 offset		Set the offset voltage of MO1 (Analog monitor 1). Setting range: -999 to 999	0 [mV]	○	○	○
PC12 MO2 Analog monitor 2 offset		Set the offset voltage of MO2 (Analog monitor 2). Setting range: -999 to 999	0 [mV]	○	○	○
PC17 **COP4 Function selection C-4	_ _ _ x	For manufacturer setting	0h			
	_ _ x _	Linear scale multipoint Z-phase input function selection When two or more reference marks exist during the full stroke of the linear encoder, set "1". 0: Disabled 1: Enabled	0h	○	○	○
	_ x _ _	For manufacturer setting	0h			
	x _ _ _		0h			
PC18 *COP5 Function selection C-5	_ _ _ x	For manufacturer setting	0h			
	_ _ x _		1h			
	_ x _ _		0h			
	x _ _ _	[AL. E9 Main circuit off warning] selection Select an occurring condition of [AL. E9 Main circuit off warning]. 0: Detection with ready-on and servo-on command 1: Detection with servo-on command	0h	○	○	○
PC19 *COP6 Function selection C-6	_ _ _ x	[AL. 99 Stroke limit warning] selection Enable or disable [AL. 99 Stroke limit warning]. 0: Enabled 1: Disabled When "Disabled" is selected, [AL. 99 Stroke limit warning] will not occur while LSP (Forward rotation stroke end) or LSN (Reverse rotation stroke end) is off, but the operation will be stopped with the stroke limit.	0h	○	○	○
	_ _ x _	For manufacturer setting	0h			
	_ x _ _		0h			
	x _ _ _		0h			

No./ symbol/name	Setting digit	Function	Initial value [unit]	Network		
				ECT	EIP	PNT
PC20 *COP7 Function selection C-7	_ _ _ x	[AL. 10 Undervoltage] detection method selection Set this parameter when [AL. 10 undervoltage] occurs due to distorted power supply voltage waveform while using FR-RC-(H) or FR-CV-(H). 0: [AL. 10] not occurrence 1: [AL. 10] occurrence	0h	○	○	○
	_ _ x _	For manufacturer setting	0h			
	_ x _ _	Undervoltage alarm selection Select the alarm and warning that occurs when the bus voltage drops to the undervoltage alarm level. 0: [AL. 10] regardless of servo motor speed 1: [AL. E9] at servo motor speed 50 r/min (50 mm/s) or less, [AL. 10] at over 50 r/min (50 mm/s)	0h	○	○	○
	x _ _ _	For manufacturer setting	0h			
PC21 *BPS Alarm history clear	_ _ _ x	Alarm history clear selection This parameter is used to clear the alarm history. 0: Disabled 1: Enabled When "Enabled" is set, the alarm history will be cleared at the next power-on. Once the alarm history is cleared, the setting becomes disabled automatically.	0h	○	○	○
	_ _ x _	For manufacturer setting	0h			
	_ x _ _		0h			
	x _ _ _		0h			

No./ symbol/name	Setting digit	Function	Initial value [unit]	Network		
				ECT	EIP	PNT
PC24 RSBR Forced stop deceleration time constant		Set a deceleration time constant for the forced stop deceleration function. Set the time taken from the rated speed to 0 r/min or 0 mm/s in units of ms. Setting "0" will apply 100 ms. 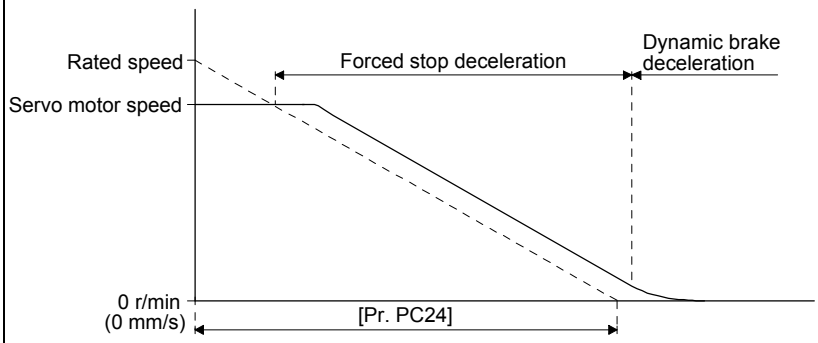 [Precautions] - If the servo motor torque or linear servo motor thrust is saturated at the maximum value during forced stop deceleration because the set time is too short, the time to stop the servo motor will be longer than the set time constant. - [AL. 50 Overload 1] or [AL. 51 Overload 2] may occur during forced stop deceleration, depending on the set value. - After an alarm that leads to a forced stop deceleration, if an alarm that does not lead to a forced stop deceleration occurs or if the control circuit power supply is cut, dynamic braking will start regardless of the deceleration time constant setting. This parameter corresponds to "Quick stop deceleration (Index: 6085h)". When this parameter is mapped for the PDO communication, the value written with MR Configurator2 is overwritten with the controller. Thus, do not write a value with MR Configurator2. Setting range: 0 to 20000	100 [ms]	○		
		Set a deceleration time constant for the forced stop deceleration function. Set the time taken from the rated speed to 0 r/min or 0 mm/s in units of ms. Setting "0" will apply 100 ms. 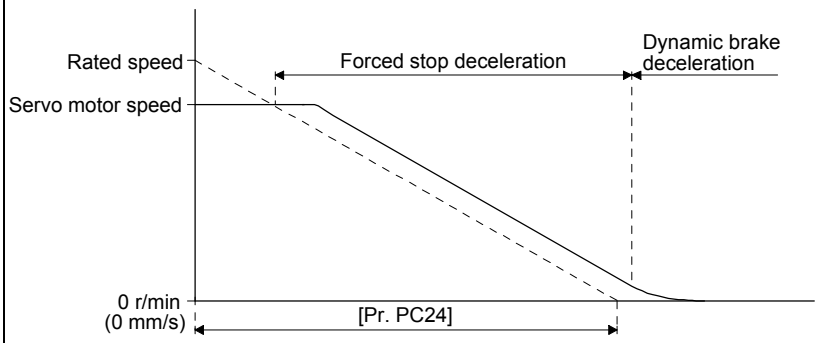 [Precautions] - If the servo motor torque or linear servo motor thrust is saturated at the maximum value during forced stop deceleration because the set time is too short, the time to stop the servo motor will be longer than the set time constant. - [AL. 50 Overload 1] or [AL. 51 Overload 2] may occur during forced stop deceleration, depending on the set value. - After an alarm that leads to a forced stop deceleration, if an alarm that does not lead to a forced stop deceleration occurs or if the control circuit power supply is cut, dynamic braking will start regardless of the deceleration time constant setting. This parameter corresponds to "Quick stop deceleration (Class ID: 64h, Ins ID: 6085h, Attr ID: 0)". When this parameter is mapped for the I/O communication, the value written with MR Configurator2 is overwritten with the controller. Thus, do not write a value with MR Configurator2. Setting range: 0 to 20000	100 [ms]		○	

No./ symbol/name	Setting digit	Function	Initial value [unit]	Network		
				ECT	EIP	PNT
PC24 RSBR Forced stop deceleration time constant		Set a deceleration time constant for the forced stop deceleration function. Set the time taken from the rated speed to 0 r/min or 0 mm/s in units of ms. Setting "0" will apply 100 ms. 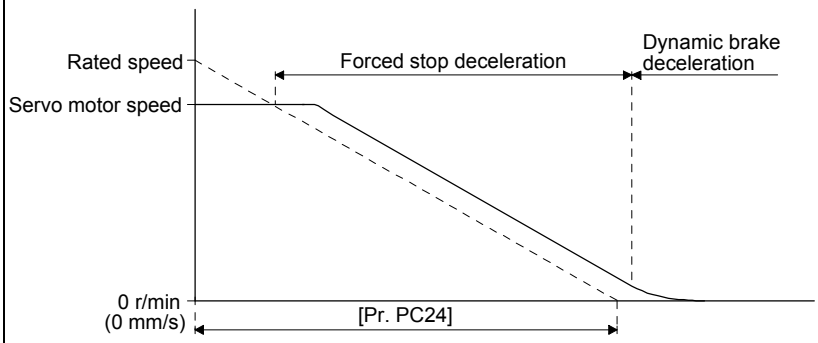 [Precautions] - If the servo motor torque or linear servo motor thrust is saturated at the maximum value during forced stop deceleration because the set time is too short, the time to stop the servo motor will be longer than the set time constant. - [AL. 50 Overload 1] or [AL. 51 Overload 2] may occur during forced stop deceleration, depending on the set value. - After an alarm that leads to a forced stop deceleration, if an alarm that does not lead to a forced stop deceleration occurs or if the control circuit power supply is cut, dynamic braking will start regardless of the deceleration time constant setting. This parameter corresponds to "Quick stop deceleration (PNU: 24709, Sub: 0)". When this parameter is mapped for the Process Data communication, the value written with MR Configurator2 is overwritten with the controller. Thus, do not write a value with MR Configurator2. Setting range: 0 to 20000	100 [ms]			○

No./ symbol/name	Setting digit	Function	Initial value [unit]	Network		
				ECT	EIP	PNT
PC26 **COP8 Function selection C-8	_ _ _ x	For manufacturer setting	0h			
	_ _ x _		0h			
	_ x _ _		0h			
	x _ _ _	Load-side encoder cable communication method selection Select an encoder cable to be connected to the CN2L connector. 0: Two-wire type 1: Four-wire type When using a load-side encoder of A/B/Z-phase differential output method, set "0". Incorrect setting will trigger [AL. 70] and [AL. 71].	0h	○	○	○
PC27 **COP9 Function selection C-9	_ _ _ x	Encoder pulse count polarity selection Select a polarity of the linear encoder or load-side encoder. 0: Encoder pulse increasing direction in the servo motor CCW or positive direction 1: Encoder pulse decreasing direction in the servo motor CCW or positive direction	0h	○	○	○
	_ _ x _	For manufacturer setting	0h			
	_ x _ _	Selection of A/B/Z-phase input interface encoder Z-phase connection judgment function Select the non-signal detection status for the pulse train signal from the A/B/Z-phase input interface encoder used as a linear encoder or load-side encoder. This function is enabled only when you use an A/B/Z-phase input interface encoder.	0h	○	○	○
	x _ _ _	For manufacturer setting	0h			

Setting value	Detection of disconnection	Alarm status		
	Z-phase-side non-signal	Standard (scale measurement function enabled)	Full.	Lin.
0	Enabled	[AL. 71.6] (Z-phase)	[AL. 71.6] (Z-phase)	[AL. 20.6] (Z-phase)
1	Disabled			

<table>
<tr><th rowspan="2">No./
symbol/name</th><th rowspan="2">Setting
digit</th><th rowspan="2">Function</th><th rowspan="2">Initial
value
[unit]</th><th colspan="3">Network</th></tr>
<tr><th>ECT</th><th>EIP</th><th>PNT</th></tr>
<tr><td rowspan="4">PC29
*COPB
Function
selection C-B</td><td>_ _ _ x</td><td rowspan="3">For manufacturer setting</td><td>0h</td><td></td><td></td><td></td></tr>
<tr><td>_ _ x _</td><td>0h</td><td></td><td></td><td></td></tr>
<tr><td>_ x _ _</td><td>0h</td><td></td><td></td><td></td></tr>
<tr><td>x _ _ _</td><td>POL reflection selection at torque mode
Select whether to enable or disable [Pr. PA14 Rotation direction selection/travel direction selection] in the torque mode. When this parameter is enabled, the polarities of "Target torque (Index: 6071h)", "Torque demand (Index: 6074h)", "Positive torque limit value (Index: 60E0h)", "Negative torque limit value (Index: 60E1h)", and "Torque actual value (Index: 6077h)" will be changed with the setting of [Pr. PA14].
0: Enabled
1: Disabled

<table>
<tr><th colspan="2">Setting value</th><th colspan="2">Servo motor rotation direction/travel direction</th></tr>
<tr><th>[Pr. PA14]</th><th>[Pr. PC29]</th><th>Torque mode
Torque command:
Positive</th><th>Torque mode
Torque command:
Negative</th></tr>
<tr><td rowspan="2">0</td><td>0 _ _ _:
Enabled</td><td>CCW or positive direction</td><td>CW or negative direction</td></tr>
<tr><td>1 _ _ _:
Disabled</td><td>CCW or positive direction</td><td>CW or negative direction</td></tr>
<tr><td rowspan="2">1</td><td>0 _ _ _:
Enabled</td><td>CW or negative direction</td><td>CCW or positive direction</td></tr>
<tr><td>1 _ _ _:
Disabled</td><td>CCW or positive direction</td><td>CW or negative direction</td></tr>
</table>
This digit can be set with a servo amplifier with software version B0 or later.</td><td>1h</td><td>○</td><td></td><td></td></tr>
<tr><td></td><td></td><td>POL reflection selection at torque mode
Select whether to enable or disable [Pr. PA14 Rotation direction selection/travel direction selection] in the torque mode. When this parameter is enabled, the polarities of "Target torque (Class ID: 64h, Ins ID: 6071h)", "Torque demand (Class ID: 64h, Ins ID: 6074h)", "Positive torque limit value (Class ID: 64h, Ins ID: 60E0h)", "Negative torque limit value (Class ID: 64h, Ins ID: 60E1h)", and "Torque actual value (Class ID: 64h, Ins ID: 6077h)" will be changed with the setting of [Pr. PA14].
0: Enabled
1: Disabled

<table>
<tr><th colspan="2">Setting value</th><th colspan="2">Servo motor rotation direction/travel direction</th></tr>
<tr><th>[Pr. PA14]</th><th>[Pr. PC29]</th><th>Torque mode
Torque command:
Positive</th><th>Torque mode
Torque command:
Negative</th></tr>
<tr><td rowspan="2">0</td><td>0 _ _ _:
Enabled</td><td>CCW or positive direction</td><td>CW or negative direction</td></tr>
<tr><td>1 _ _ _:
Disabled</td><td>CCW or positive direction</td><td>CW or negative direction</td></tr>
<tr><td rowspan="2">1</td><td>0 _ _ _:
Enabled</td><td>CW or negative direction</td><td>CCW or positive direction</td></tr>
<tr><td>1 _ _ _:
Disabled</td><td>CCW or positive direction</td><td>CW or negative direction</td></tr>
</table>
This digit can be set with a servo amplifier with software version B0 or later.</td><td>1h</td><td></td><td>○</td><td></td></tr>
</table>

<table>
<tr><th rowspan="2">No./
symbol/name</th><th rowspan="2">Setting
digit</th><th rowspan="2">Function</th><th rowspan="2">Initial
value
[unit]</th><th colspan="3">Network</th></tr>
<tr><th>ECT</th><th>EIP</th><th>PNT</th></tr>
<tr><td>PC29
*COPB
Function
selection C-B</td><td>x _ _ _</td><td>POL reflection selection at torque mode
Select whether to enable or disable [Pr. PA14 Rotation direction selection/travel direction selection] in the torque mode. When this parameter is enabled, the polarities of "Target torque (PNU: 24689)", "Torque demand (PNU: 24692)", "Positive torque limit value (PNU: 24800)", "Negative torque limit value (PNU: 24801)", and "Torque actual value (PNU: 24695)" will be changed with the setting of [Pr. PA14].
0: Enabled
1: Disabled
<table><tr><th colspan="2">Setting value</th><th colspan="2">Servo motor rotation direction/travel direction</th></tr><tr><th>[Pr. PA14]</th><th>[Pr. PC29]</th><th>Torque mode
Torque command:
Positive</th><th>Torque mode
Torque command:
Negative</th></tr><tr><td rowspan="2">0</td><td>0 _ _ _:
Enabled</td><td>CCW or positive direction</td><td>CW or negative direction</td></tr><tr><td>1 _ _ _:
Disabled</td><td>CCW or positive direction</td><td>CW or negative direction</td></tr><tr><td rowspan="2">1</td><td>0 _ _ _:
Enabled</td><td>CW or negative direction</td><td>CCW or positive direction</td></tr><tr><td>1 _ _ _:
Disabled</td><td>CCW or positive direction</td><td>CW or negative direction</td></tr></table>This digit can be set with a servo amplifier with software version B0 or later.</td><td>1h</td><td></td><td></td><td>○</td></tr>
<tr><td>PC31
RSUP1
Vertical axis freefall prevention compensation amount</td><td></td><td>Set the compensation amount of the vertical axis freefall prevention function.
Set it per servo motor rotation amount or linear servo motor travel distance.
When setting a positive value, the servo motor or linear servo motor moves in the direction set with [Pr. PA14] for the forward rotation pulse input. When setting a negative value, the servo motor or linear servo motor moves in the direction set with [Pr. PA14] for the reverse rotation pulse input.
For example, when [Pr. PA14 Rotation direction selection/travel direction selection] is set to "1" and a positive value is set for the compensation amount, the servo motor pulls up in the CW direction.
The vertical axis freefall prevention function is performed when all of the following conditions are met.
1) Position mode
2) The setting value of this parameter is other than "0".
3) The forced stop deceleration function is enabled.
4) Alarm occurs or EM2 turns off when the servo motor speed is zero speed or less.
5) MBR (Electromagnetic brake interlock) was enabled in [Pr. PD07] to [Pr. PD09], and the base circuit shut-off delay time was set in [Pr. PC02].

Setting range: -25000 to 25000</td><td>0
[0.0001
rev]/
[0.01
mm]</td><td>○</td><td>○</td><td>○</td></tr>
<tr><td>PC38
ERW
Error excessive warning level</td><td></td><td>Set an error excessive warning level.
The setting unit can be changed with "Error excessive alarm/error excessive warning level unit selection" in [Pr. PC06].
Set this per rev. for rotary servo motors and direct drive motors. Setting over 200 rev will be clamped with 200 rev. Set this per mm for linear servo motors. However, setting "0" will not trigger [AL. 9B Error excessive warning].

When an error reaches the set value, [AL. 9B Error excessive warning] will occur. When the error decreases lower than the set value, the warning will be canceled automatically. The minimum pulse width of the warning signal is 100 [ms].
Set as follows.: [Pr. PC38 Error excessive warning level] < [Pr. PC01 Error excessive alarm level] When you set as follows, [AL. 52 Error excessive] will occur earlier than the warning.: [Pr. PC38 Error excessive warning level] ≥ [Pr. PC01 Error excessive alarm level]

Setting range: 0 to 1000</td><td>0
[rev]/
[mm]</td><td>○</td><td>○</td><td>○</td></tr>
</table>

No./ symbol/name	Setting digit	Function	Initial value [unit]	Network		
				ECT	EIP	PNT
PC65 ZSP2L Zero speed 2 level		Set a speed level for turning on the zero speed 2. When the state in which the absolute value of the servo motor speed exceeds the parameter setting value continues for the time set in [Pr. PC66 Zero speed 2 filtering time] or longer, "Statusword (Index: 6041h) bit 12 Speed" will be turned off. This function will be enabled in the profile velocity mode (pv). This parameter corresponds to "Velocity threshold (Index: 606Fh)". When this parameter is mapped for the PDO communication, the value written with MR Configurator2 is overwritten with the controller. Thus, do not write a value with MR Configurator2. Setting range: 0.00 to 655.35	50.00 [r/min]/ [mm/s]	○		
		Set a speed level for turning on the zero speed 2. When the state in which the absolute value of the servo motor speed exceeds the parameter setting value continues for the time set in [Pr. PC66 Zero speed 2 filtering time] or longer, "Statusword (Class ID: 64h, Ins ID: 6041h) bit 12 Speed" will be turned off. This function will be enabled in the profile velocity mode (pv). This parameter corresponds to "Velocity threshold (Class ID: 64h, Ins ID: 606Fh, Attr ID: 0)". When this parameter is mapped for the I/O communication, the value written with MR Configurator2 is overwritten with the controller. Thus, do not write a value with MR Configurator2. Setting range: 0.00 to 655.35	50.00 [r/min]/ [mm/s]		○	
		Set a speed level for turning on the zero speed 2. When the state in which the absolute value of the servo motor speed exceeds the parameter setting value continues for the time set in [Pr. PC66 Zero speed 2 filtering time] or longer, "Statusword (PNU: 24641) bit 12 Speed" will be turned off. This function will be enabled in the profile velocity mode (pv). This parameter corresponds to "Velocity threshold (PNU: 24687, Sub: 0)". When this parameter is mapped for the Process Data communication, the value written with MR Configurator2 is overwritten with the controller. Thus, do not write a value with MR Configurator2. Setting range: 0.00 to 655.35	50.00 [r/min]/ [mm/s]			○
PC66 ZSP2F Zero speed 2 filtering time		Set the zero speed 2 filtering time. When the state in which the absolute value of the servo motor speed exceeds [Pr. PC65 Zero speed 2 level] continues for the time set in this parameter or longer, "Statusword (Index: 6041h) bit 12 Speed" will be turned off. This function will be enabled in the profile velocity mode (pv). This parameter corresponds to "Velocity threshold time (Index: 6070h)". When this parameter is mapped for the PDO communication, the value written with MR Configurator2 is overwritten with the controller. Thus, do not write a value with MR Configurator2. Setting range: 0 to 65535	10 [ms]	○		
		Set the zero speed 2 filtering time. When the state in which the absolute value of the servo motor speed exceeds [Pr. PC65 Zero speed 2 level] continues for the time set in this parameter or longer, "Statusword (Class ID: 64h, Ins ID: 6041h) bit 12 Speed" will be turned off. This function will be enabled in the profile velocity mode (pv). This parameter corresponds to "Velocity threshold time (Class ID: 64h, Ins ID: 6070h, Attr ID: 0)". When this parameter is mapped for the I/O communication, the value written with MR Configurator2 is overwritten with the controller. Thus, do not write a value with MR Configurator2. Setting range: 0 to 65535	10 [ms]		○	

No./ symbol/name	Setting digit	Function	Initial value [unit]	Network		
				ECT	EIP	PNT
PC66 ZSP2F Zero speed 2 filtering time		Set the zero speed 2 filtering time. When the state in which the absolute value of the servo motor speed exceeds [Pr. PC65 Zero speed 2 level] continues for the time set in this parameter or longer, "Statusword (PNU: 24641) bit 12 Speed" will be turned off. This function will be enabled in the profile velocity mode (pv). This parameter corresponds to "Velocity threshold time (PNU: 24688, Sub: 0)". When this parameter is mapped for the Process Data communication, the value written with MR Configurator2 is overwritten with the controller. Thus, do not write a value with MR Configurator2. Setting range: 0 to 65535	10 [ms]			○
PC67 FEWL Following error output level (lower four digits)		Set a following error output level. Upper and lower are a set. When the state in which droop pulses ≥ the parameter setting value continues for the time set in [Pr. PC69 Following error output filtering time], "Statusword (Index: 6041h) bit 13 Following error" will be turned on. However, setting "FFFFh FFFFh" will disable it. Set a value in hexadecimal. Setting value: $\underbrace{_\ _\ _\ _}_{\text{Upper four digits}}\ \underbrace{_\ _\ _\ _}_{\text{Lower four digits}}$ Lower four digits → [Pr. PC67] Upper four digits → [Pr. PC68] This function is enabled in the cyclic synchronous position mode (csp), profile position mode (pp), point table mode (pt), Jog mode (jg) and indexer mode (idx). The unit can be changed to 10^{STM} [μm], $10^{(STM-4)}$ [inch], 10^{-3} [degree] or [pulse] according to the setting of [Pr. PT01]. This parameter corresponds to "Following error window (Index: 6065h)". When this parameter is mapped for the PDO communication, the value written with MR Configurator2 is overwritten with the controller. Thus, do not write a value with MR Configurator2. Setting range: 0000h 0000h to FFFFh FFFFh	0000h Refer to Function Column for unit.	○		

No./ symbol/name	Setting digit	Function	Initial value [unit]	Network		
				ECT	EIP	PNT
PC67 FEWL Following error output level (lower four digits)		Set a following error output level. Upper and lower are a set. When the state in which droop pulses ≥ the parameter setting value continues for the time set in [Pr. PC69 Following error output filtering time], "Statusword (Class ID: 64h, Ins ID: 6041h, Attr ID: 0) bit 13 Following error" will be turned on. However, setting "FFFFh FFFFh" will disable it. Set a value in hexadecimal. Setting value: ＿ ＿ ＿ ＿ ＿ ＿ ＿ ＿ Upper four digits / Lower four digits [Pr. PC67] [Pr. PC68] This function is enabled in the profile position mode (pp). The unit can be changed to 10^{STM} [μm], $10^{(STM-4)}$ [inch], 10^{-3} [degree] or [pulse] according to the setting of [Pr. PT01]. This parameter corresponds to "Following error window (Class ID: 64h, Ins ID: 6065h, Attr ID: 0)". When this parameter is mapped for the I/O communication, the value written with MR Configurator2 is overwritten with the controller. Thus, do not write a value with MR Configurator2. Setting range: 0000h 0000h to FFFFh FFFFh	0000h Refer to Function column for unit.		○	
		Set a following error output level. Upper and lower are a set. When the state in which droop pulses ≥ the parameter setting value continues for the time set in [Pr. PC69 Following error output filtering time], "Statusword (PNU: 24641, Sub: 0) bit 13 Following error" will be turned on. However, setting "FFFFh FFFFh" will disable it. Set a value in hexadecimal. Setting value: ＿ ＿ ＿ ＿ ＿ ＿ ＿ ＿ Upper four digits / Lower four digits [Pr. PC67] [Pr. PC68] This function is enabled in the profile position mode (pp), point table mode (pt), Jog mode (jg) and indexer mode (idx). The unit can be changed to 10^{STM} [μm], $10^{(STM-4)}$ [inch], 10^{-3} [degree] or [pulse] according to the setting of [Pr. PT01]. This parameter corresponds to "Following error window (PNU: 24677, Sub: 0)". When this parameter is mapped for the Process Data communication, the value written with MR Configurator2 is overwritten with the controller. Thus, do not write a value with MR Configurator2. Setting range: 0000h 0000h to FFFFh FFFFh	0000h Refer to Function column for unit.			○
PC68 FEWH Following error output level (upper four digits)		Set a following error output level. Upper and lower are a set. Refer to [Pr. PC67] for details. The unit can be changed to 10^{STM} [μm], $10^{(STM-4)}$ [inch], 10^{-3} [degree] or [pulse] according to the setting of [Pr. PT01].	0000h Refer to Function column for unit.	○	○	○

No./ symbol/name	Setting digit	Function	Initial value [unit]	Network		
				ECT	EIP	PNT
PC69 FEWF Following error output filtering time		Set the time until the following error output turns on. When the state in which droop pulses ≥ [Pr. PC67/Pr. PC68 Following error output level] continues for the time set in the parameter setting value, "Statusword (Index: 6041h) bit 13 Following error" will be turned on. This function is enabled in the cyclic synchronous position mode (csp), profile position mode (pp), point table mode (pt), Jog mode (jg) and indexer mode (idx). The following error output will be disabled when both [Pr. PC67] and [Pr. PC68] are "FFFFh". This parameter corresponds to "Following error time out (Index: 6066h)". When this parameter is mapped for the PDO communication, the value written with MR Configurator2 is overwritten with the controller. Thus, do not write a value with MR Configurator2. Setting range: 0 to 65535	10 [ms]	○		
		Set the time until the following error output turns on. When the state in which droop pulses ≥ [Pr. PC67/Pr. PC68 Following error output level] continues for the time set in the parameter setting value, "Statusword (Class ID: 64h, Ins ID: 6041h) bit 13 Following error" will be turned on. This function is enabled in the profile position mode (pp). The following error output will be disabled when both [Pr. PC67] and [Pr. PC68] are "FFFFh". This parameter corresponds to "Following error time out (Class ID: 64h, Ins ID: 6066h, Attr ID: 0)". When this parameter is mapped for the I/O communication, the value written with MR Configurator2 is overwritten with the controller. Thus, do not write a value with MR Configurator2. Setting range: 0 to 65535	10 [ms]		○	
		Set the time until the following error output turns on. When the state in which droop pulses ≥ [Pr. PC67/Pr. PC68 Following error output level] continues for the time set in the parameter setting value, "Statusword (PNU: 24641) bit 13 Following error" will be turned on. This function is enabled in the profile position mode (pp), point table mode (pt), Jog mode (jg) and indexer mode (idx). The following error output will be disabled when both [Pr. PC67] and [Pr. PC68] are "FFFFh". This parameter corresponds to "Following error time out (PNU: 24678, Sub: 0)". When this parameter is mapped for the Process Data communication, the value written with MR Configurator2 is overwritten with the controller. Thus, do not write a value with MR Configurator2. Setting range: 0 to 65535	10 [ms]			○

No./ symbol/name	Setting digit	Function	Initial value [unit]	Network		
				ECT	EIP	PNT
PC70 INP2R In-position 2 output range		Set a position range for turning on the in-position 2 output. When the state in which an error between the command position and current position is within the parameter setting value continues for the time set in [Pr. PC71 In-position 2 output filtering time] or longer, "Statusword (Index: 6041h) bit 10 Target reached" will be turned on. However, when this parameter is set to "65535", "Statusword (Index: 6041h) bit 10 Target reached" will be always on. This function is enabled in the profile position mode (pp), point table mode (pt) and Jog mode (jg). The unit can be changed to 10^{STM} [μm], $10^{(STM-4)}$ [inch], 10^{-3} [degree] or [pulse] according to the setting of [Pr. PT01]. This parameter corresponds to "Position window (Index: 6067h)". When this parameter is mapped for the PDO communication, the value written with MR Configurator2 is overwritten with the controller. Thus, do not write a value with MR Configurator2. Setting range: 0 to 65535	100 Refer to Function column for unit.	○		
		Set a position range for turning on the in-position 2 output. When the state in which an error between the command position and current position is within the parameter setting value continues for the time set in [Pr. PC71 In-position 2 output filtering time] or longer, "Statusword (Class ID: 64h, Ins ID: 6041h) bit 10 Target reached" will be turned on. However, when the parameter is set to "65535", "Statusword (Class ID: 64h, Ins ID: 6041h) bit 10 Target reached" will be always on. This function is enabled in the profile position mode (pp). The unit can be changed to 10^{STM} [μm], $10^{(STM-4)}$ [inch], 10^{-3} [degree] or [pulse] according to the setting of [Pr. PT01]. This parameter corresponds to "Position window (Class ID: 64h, Ins ID: 6067h, Attr ID: 0)". When this parameter is mapped for the I/O communication, the value written with MR Configurator2 is overwritten with the controller. Thus, do not write a value with MR Configurator2. Setting range: 0 to 65535	100 Refer to Function column for unit.		○	
		Set a position range for turning on the in-position 2 output. When the state in which an error between the command position and current position is within the parameter setting value continues for the time set in [Pr. PC71 In-position 2 output filtering time] or longer, "Statusword (PNU: 24641) bit 10 Target reached" will be turned on. However, when the parameter is set to "65535", "Statusword (PNU: 24641) bit 10 Target reached" will be always on. This function is enabled in the profile position mode (pp), point table mode (pt) and Jog mode (jg). The unit can be changed to 10^{STM} [μm], $10^{(STM-4)}$ [inch], 10^{-3} [degree] or [pulse] according to the setting of [Pr. PT01]. This parameter corresponds to "Position window (PNU: 24679, Sub: 0)". When this parameter is mapped for the Process Data communication, the value written with MR Configurator2 is overwritten with the controller. Thus, do not write a value with MR Configurator2. Setting range: 0 to 65535	100 Refer to Function column for unit.			○

No./ symbol/name	Setting digit	Function	Initial value [unit]	Network		
				ECT	EIP	PNT
PC71 INP2F In-position 2 output filtering time		Set the time until the in-position 2 output turns on. When the state in which an error between the command position and current position is within [Pr. PC70 In-position 2 output range] continues for the time set in this parameter or longer, "Statusword (Index: 6041h) bit 10 Target reached" will be turned on. However, when this parameter is set to "65535", "Statusword (Index: 6041h) bit 10 Target reached" will be always on. This function is enabled in the profile position mode (pp), point table mode (pt) and Jog mode (jg). This parameter corresponds to "Position window time (Index: 6068h)". When this parameter is mapped for the PDO communication, the value written with MR Configurator2 is overwritten with the controller. Thus, do not write a value with MR Configurator2. Setting range: 0 to 65535	10 [ms]	○		
		Set the time until the in-position 2 output turns on. When the state in which an error between the command position and current position is within [Pr. PC70 In-position 2 output range] continues for the time set in this parameter or longer, "Statusword (Class ID: 64h, Ins ID: 6041h) bit 10 Target reached" will be turned on. However, when the parameter is set to "65535", "Statusword (Class ID: 64h, Ins ID: 6041h) bit 10 Target reached" will be always on. This function is enabled in the profile position mode (pp). This parameter corresponds to "Position window time (Class ID: 64h, Ins ID: 6068h, Attr ID: 0)". When this parameter is mapped for the I/O communication, the value written with MR Configurator2 is overwritten with the controller. Thus, do not write a value with MR Configurator2. Setting range: 0 to 65535	10 [ms]		○	
		Set the time until the in-position 2 output turns on. When the state in which an error between the command position and current position is within [Pr. PC70 In-position 2 output range] continues for the time set in this parameter or longer, "Statusword (PNU: 24641) bit 10 Target reached" will be turned on. However, when the parameter is set to "65535", "Statusword (PNU: 24641) bit 10 Target reached" will be always on. This function is enabled in the profile position mode (pp), point table mode (pt) and Jog mode (jg). This parameter corresponds to "Position window time (PNU: 24680, Sub: 0)". When this parameter is mapped for the Process Data communication, the value written with MR Configurator2 is overwritten with the controller. Thus, do not write a value with MR Configurator2. Setting range: 0 to 65535	10 [ms]			○

No./ symbol/name	Setting digit	Function	Initial value [unit]	Network		
				ECT	EIP	PNT
PC72 SA2R Speed reached 2 output range		Set a speed range for turning on the speed reached 2 output. When the state in which an error between the command speed and servo motor speed is within the parameter setting value continues for the time set in [Pr. PC73 Speed reached 2 output filtering time] or longer, "Statusword (Index: 6041h) bit 10 Target velocity reached" will be turned on. This function will be enabled in the profile velocity mode (pv). This parameter corresponds to "Velocity window (Index: 606Dh)". When this parameter is mapped for the PDO communication, the value written with MR Configurator2 is overwritten with the controller. Thus, do not write a value with MR Configurator2. Setting range: 0.00 to 655.35	20.00 [r/min]/ [mm/s]	○		
		Set a speed range for turning on the speed reached 2 output. When the state in which an error between the command speed and servo motor speed is within the parameter setting value continues for the time set in [Pr. PC73 Speed reached 2 output filtering time] or longer, "Statusword (Class ID: 64h, Ins ID: 6041h) bit 10 Target velocity reached" will be turned on. This function will be enabled in the profile velocity mode (pv). This parameter corresponds to "Velocity window (Class ID: 64h, Ins ID: 606Dh, Attr ID: 0)". When this parameter is mapped for the I/O communication, the value written with MR Configurator2 is overwritten with the controller. Thus, do not write a value with MR Configurator2. Setting range: 0.00 to 655.35	20.00 [r/min]/ [mm/s]		○	
		Set a speed range for turning on the speed reached 2 output. When the state in which an error between the command speed and servo motor speed is within the parameter setting value continues for the time set in [Pr. PC73 Speed reached 2 output filtering time] or longer, "Statusword (PNU: 24641) bit 10 Target velocity reached" will be turned on. This function will be enabled in the profile velocity mode (pv). This parameter corresponds to "Velocity window (PNU: 24685, Sub: 0)". When this parameter is mapped for the Process Data communication, the value written with MR Configurator2 is overwritten with the controller. Thus, do not write a value with MR Configurator2. Setting range: 0.00 to 655.35	20.00 [r/min]/ [mm/s]			○

No./ symbol/name	Setting digit	Function	Initial value [unit]	Network		
				ECT	EIP	PNT
PC73 SA2F Speed reached 2 output filtering time		Set the time until the speed reached 2 output turns on. When the state in which an error between the speed command and servo motor speed is within [Pr. PC72 Speed reached 2 output range] continues for the time set in this parameter or longer, "Statusword (Index: 6041h) bit 10 Target velocity reached" will be turned on. This function will be enabled in the profile velocity mode (pv). This parameter corresponds to "Velocity window time (Index: 606Eh)". When this parameter is mapped for the PDO communication, the value written with MR Configurator2 is overwritten with the controller. Thus, do not write a value with MR Configurator2. Setting range: 0 to 65535	10 [ms]	○		
		Set the time until the speed reached 2 output turns on. When the state in which an error between the speed command and servo motor speed is within [Pr. PC72 Speed reached 2 output range] continues for the time set in this parameter or longer, "Statusword (Class ID: 64h, Ins ID: 6041h) bit 10 Target velocity reached" will be turned on. This function will be enabled in the profile velocity mode (pv). This parameter corresponds to "Velocity window time (Class ID: 64h, Ins ID: 606Eh, Attr ID: 0)". When this parameter is mapped for the I/O communication, the value written with MR Configurator2 is overwritten with the controller. Thus, do not write a value with MR Configurator2. Setting range: 0 to 65535	10 [ms]		○	
		Set the time until the speed reached 2 output turns on. When the state in which an error between the speed command and servo motor speed is within [Pr. PC72 Speed reached 2 output range] continues for the time set in this parameter or longer, "Statusword (PNU: 24641) bit 10 Target velocity reached" will be turned on. This function will be enabled in the profile velocity mode (pv). This parameter corresponds to "Velocity window time (PNU: 24686, Sub: 0)". When this parameter is mapped for the Process Data communication, the value written with MR Configurator2 is overwritten with the controller. Thus, do not write a value with MR Configurator2. Setting range: 0 to 65535	10 [ms]			○

No./ symbol/name	Setting digit	Function	Initial value [unit]	Network		
				ECT	EIP	PNT
PC76 *COPE Function selection C-E	_ _ _ x	For manufacturer setting	1h			
	_ _ x _		0h			
	_ x _ _	Internal command speed POL reflection selection When this parameter is enabled, the polarity of "Velocity demand value (Index: 606Bh)" can be changed depending on the setting of [Pr. PA14 Rotation direction selection/travel direction selection]. 0: Automatic setting (POL setting disabled) 1: POL setting enabled 2: POL setting disabled This digit can be set with a servo amplifier with software version B0 or later.	0h	○		
		Internal command speed POL reflection selection When this parameter is enabled, the polarity of "Velocity demand value (Class ID: 64h, Ins ID: 606Bh)" can be changed depending on the setting of [Pr. PA14 Rotation direction selection/travel direction selection]. 0: Automatic setting (POL setting enabled) 1: POL setting enabled 2: POL setting disabled This digit can be set with a servo amplifier with software version B0 or later.	0h		○	
		Internal command speed POL reflection selection When this parameter is enabled, the polarity of "Velocity demand value (PNU: 24683)" can be changed depending on the setting of [Pr. PA14 Rotation direction selection/travel direction selection]. 0: Automatic setting (POL setting enabled) 1: POL setting enabled 2: POL setting disabled This digit can be set with a servo amplifier with software version B0 or later.	0h			○
	x _ _ _	Limit switch status reading selection Select the on/off statuses of "Digital inputs (Index: 60FDh)" for the on/off statuses of LSP (Forward rotation stroke end) and LSN (Reverse rotation stroke end). Refer to the following table for details. This digit can be set with servo amplifiers with software version B2 or later.	0h	○		
		Limit switch status reading selection Select the on/off statuses of "Digital inputs (Class ID: 64h, Ins ID: 60FDh, Attr ID: 0)" for the on/off statuses of LSP (Forward rotation stroke end) and LSN (Reverse rotation stroke end). Refer to the following table for details. This digit can be set with servo amplifiers with software version B2 or later.	0h		○	
		Limit switch status reading selection Select the on/off statuses of "Digital inputs (PNU: 24829, Sub: 0)" for the on/off statuses of LSP (Forward rotation stroke end) and LSN (Reverse rotation stroke end). Refer to the following table for details. This digit can be set with servo amplifiers with software version B2 or later.	0h			○

[Pr. PC76]	LSP/LSN	Digital inputs (Note)
0 _ _ _	Off	Off
	On	On
1 _ _ _	Off	On
	On	Off

Note. For details of "Digital inputs", refer to respective communication method manuals of "MR-J4-_TM_ Servo Amplifier Instruction Manual".

No./ symbol/name	Setting digit	Function	Initial value [unit]	Network ECT	Network EIP	Network PNT
PC79 *COP10 Function selection C-10	Select whether the on/off status of the input device is returned or the on/off status of the pins are returned when reading "Digital inputs". For details of "Digital inputs", refer to respective communication method manuals of "MR-J4-_TM_ Servo Amplifier Instruction Manual". This parameter setting is available with servo amplifiers with software version B2 or later.					
	_ _ _ x (HEX)	_ _ _ x (BIN): For manufacturer setting	0h			
		_ _ x _ (BIN): DI1 status reading selection Select DI1 (bit 17) status reading. 0: The on/off status of the input device is returned. 1: The on/off status of the CN3-2 pin is returned.		○	○	○
		_ x _ _ (BIN): DI2 status reading selection Select DI2 (bit 18) status reading. 0: The on/off status of the input device is returned. 1: The on/off status of the CN3-12 pin is returned.		○	○	○
		x _ _ _ (BIN): DI3 status reading selection Select DI3 (bit 19) status reading. 0: The on/off status of the input device is returned. 1: The on/off status of the CN3-19 pin is returned.		○	○	○
	_ _ x _ (HEX)	_ _ _ x (BIN): DI4 status reading selection Select DI4 (bit 20) status reading. 0: The on/off status of the input device is returned. 1: The on/off status of the CN3-10 pin is returned.	0h	○	○	○
		_ _ x _ (BIN): DI5 status reading selection Select DI5 (bit 21) status reading. 0: The on/off status of the input device is returned. 1: The on/off status of the CN3-1 pin is returned.		○	○	○
		_ x _ _ (BIN): EM2/EM1 status reading selection Select EM2/EM1 (bit 22) status reading. 0: The on/off status of the input device is returned. 1: The on/off status of the CN3-20 pin is returned.		○	○	○
		x _ _ _ (BIN): For manufacturer setting				
	_ x _ _	For manufacturer setting	0h			
	x _ _ _	For manufacturer setting	0h			

Convert the setting value into hexadecimal as follows.

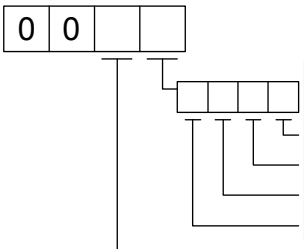

Signal name	Initial value BIN	Initial value HEX
	0	0
DI1 status reading selection	0	
DI2 status reading selection	0	
DI3 status reading selection	0	

Signal name	Initial value BIN	Initial value HEX
DI4 status reading selection	0	0
DI5 status reading selection	0	
EM2/EM1 status reading selection	0	
	0	

BIN 0: The on/off status of the input device is returned.
BIN 1: The on/off status of the pin is returned.

5.2.4 I/O setting parameters ([Pr. PD_ _])

No./ symbol/name	Setting digit	Function	Initial value [unit]	Network ECT	Network EIP	Network PNT
PD01 *DIA1 Input signal automatic on selection 1	Select input devices to turn on automatically.					
	_ _ _ x	For manufacturer setting	0h			
	_ _ x _		0h			
	_ x _ _ (HEX)	_ _ _ x (BIN): For manufacturer setting	0h	○	○	○
		_ _ x _ (BIN): For manufacturer setting				
		_ x _ _ (BIN): LSP (Forward rotation stroke end) 0: Disabled (Use for an external input signal.) 1: Enabled (automatic on)				
		x _ _ _ (BIN): LSN (Reverse rotation stroke end) 0: Disabled (Use for an external input signal.) 1: Enabled (automatic on)				
	x _ _ _	For manufacturer setting	0h			

Convert the setting value into hexadecimal as follows.

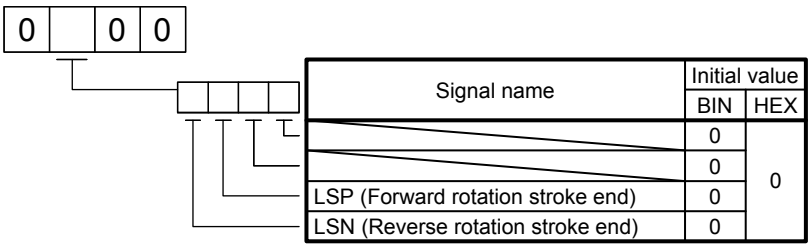

Signal name	Initial value BIN	Initial value HEX
	0	0
	0	
LSP (Forward rotation stroke end)	0	
LSN (Reverse rotation stroke end)	0	

BIN 0: Use for an external input signal.
BIN 1: Automatic on

When you perform a magnetic pole detection without using LSP (Forward rotation stroke end) and LSN (Reverse rotation stroke end), setting [Pr. PL08 Linear servo motor/DD motor function selection 3] to "_ 1 _ _" allows you to disable LSP and LSN.

No./ symbol/name	Setting digit	Function	Initial value [unit]	Network ECT	Network EIP	Network PNT
PD03 *DI1 Input device selection 1	Any input device can be assigned to the CN3-2 pin.					
	_ _ x x	Device selection Refer to table 5.9 for settings.	0Ah	○	○	○
	_ x _ _	For manufacturer setting	0h			
	x _ _ _		0h			

Table 5.9 Selectable input devices

Setting value	Input device
_ _ 0 0	
_ _ 0 4	PC (Proportional control)
_ _ 0 A	LSP (Forward rotation stroke end)
_ _ 0 B	LSN (Reverse rotation stroke end)
_ _ 0 D	CDP (Gain switching)
_ _ 0 E	CLD (Fully closed loop selection)
_ _ 2 2	DOG (Proximity dog)
_ _ 2 8	DIA (General-purpose input A) (Note)
_ _ 2 9	DIB (General-purpose input B) (Note)
_ _ 2 A	DIC (General-purpose input C) (Note)

Note. The setting value is available with servo amplifiers with software version B2 or later.

No./ symbol/name	Setting digit	Function	Initial value [unit]	Network		
				ECT	EIP	PNT
PD04 *DI2 Input device selection 2	Any input device can be assigned to the CN3-12 pin.					
	_ _ x x	Device selection Refer to table 5.9 in [Pr. PD03] for settings.	0Bh	○	○	○
	_ x _ _	For manufacturer setting	0h			
	x _ _ _		0h			
PD05 *DI3 Input device selection 3	Any input device can be assigned to the CN3-19 pin.					
	_ _ x x	Device selection Refer to table 5.9 in [Pr. PD03] for settings.	22h	○	○	○
	_ x _ _	For manufacturer setting	0h			
	x _ _ _		0h			
PD07 *DO1 Output device selection 1	_ _ x x	Device selection Any output device can be assigned to the CN3-13 pin. As the initial value, MBR (Electromagnetic brake interlock) is assigned to the pin. Refer to table 5.10 for settings.	05h	○	○	○
	_ x _ _	For manufacturer setting	0h			
	x _ _ _		0h			

Table 5.10 Selectable output devices

Setting value	Output device
_ _ 0 0	Always off
_ _ 0 2	RD (Ready)
_ _ 0 3	ALM (Malfunction)
_ _ 0 4	INP (In-position)
_ _ 0 5	MBR (Electromagnetic brake interlock)
_ _ 0 6	DB (Dynamic brake interlock)
_ _ 0 7	TLC (Limiting torque)
_ _ 0 8	WNG (Warning)
_ _ 0 9	BWNG (Battery warning)
_ _ 0 A	SA (Speed reached)
_ _ 0 B	VLC (Limiting speed)
_ _ 0 C	ZSP (Zero speed detection)
_ _ 0 F	CDPS (Variable gain selection)
_ _ 1 0	CLDS (During fully closed loop control)
_ _ 1 1	ABSV (Absolute position undetermined)
_ _ 1 7	MTTR (During tough drive)
_ _ 2 1	DOA (General-purpose output A) (Note)
_ _ 2 2	DOB (General-purpose output B) (Note)
_ _ 2 3	DOC (General-purpose output C) (Note)

Note. The setting value is available with servo amplifiers with software version B2 or later.

PD08 *DO2 Output device selection 2	_ _ x x	Device selection Any output device can be assigned to the CN3-9 pin. INP (In-position) is assigned as the initial value. Refer to table 5.10 in [Pr. PD07] for settings.	04h	○	○	○
	_ x _ _	For manufacturer setting	0h			
	x _ _ _		0h			
PD09 *DO3 Output device selection 3	_ _ x x	Device selection Any output device can be assigned to the CN3-15 pin. ALM (Malfunction) is assigned as the initial value. Refer to table 5.10 in [Pr. PD07] for settings.	03h	○	○	○
	_ x _ _	For manufacturer setting	0h			
	x _ _ _		0h			

No./ symbol/name	Setting digit	Function	Initial value [unit]	Network		
				ECT	EIP	PNT
PD11 *DIF Input filter setting	Select a filter for the input signal.					
	_ _ _ x	Input signal filter selection If external input signal causes chattering due to noise, etc., input filter is used to suppress it. 0: None 1: 0.888 [ms] 2: 1.777 [ms] 3: 2.666 [ms] 4: 3.555 [ms]	4h	○	○	○
	_ _ x _	For manufacturer setting	0h			
	_ x _ _		0h			
	x _ _ _		0h			
PD12 *DOP1 Function selection D-1	_ _ _ x	For manufacturer setting	1h			
	_ _ x _		0h			
	_ x _ _		1h			
	x _ _ _	Servo motor thermistor enabled/disabled selection 0: Enabled 1: Disabled The setting in this digit will be disabled when you use a servo motor without thermistor.	0h	○	○	○
PD13 *DOP2 Function selection D-2	_ _ _ x	For manufacturer setting	0h			
	_ _ x _		0h			
	_ x _ _	INP (In-position) on condition selection Select a condition for turning on INP (In-position). 0: Within the in-position range 1: Within the in-position range and at the completion of command output	0h	○	○	○
	x _ _ _	For manufacturer setting	0h			
PD14 *DOP3 Function selection D-3	_ _ _ x	For manufacturer setting	0h			
	_ _ x _	Selection of output device at warning occurrence Select WNG (Warning) and ALM (Malfunction) output status at warning occurrence. Servo amplifier output Setting value: 0 (Note 1) Device status: WNG 1/0, ALM 1/0, Warning occurrence Setting value: 1 (Note 1) Device status: WNG 1/0, ALM 1/0, Warning occurrence (Note 2) Note 1. 0: Off 1: On 2. Although ALM is turned off upon occurrence of the warning, the forced stop deceleration is performed.	0h	○	○	○
	_ x _ _	For manufacturer setting	0h			
	x _ _ _		0h			

No./ symbol/name	Setting digit	Function	Initial value [unit]	Network		
				ECT	EIP	PNT
PD37 *TPOP Touch probe function selection	_ _ _ x	Touch probe higher precision selection Latches the rising of TPR2 correctly, and detects it with an accuracy of 2 μs. 0: Disabled 1: Enabled When "Enabled" is selected, encoder output pulses are disabled.	0h	○	○	○
	_ _ x _	For manufacturer setting	0h			
	_ x _ _		0h			
	x _ _ _		0h			
PD38 *TPR1 Touch probe selection 1	_ _ x x	Input signal function selection Select an input device to be assigned to the CN3-10 pin. 2C: TPR1 (touch probe 1) 2E: ST (operation start-up) The setting value "2E" is available with servo amplifiers with software version B0 or later.	2Ch		○	
	_ x _ _	For manufacturer setting	0h			
	x _ _ _		0h			

5.2.5 Extension setting 2 parameters ([Pr. PE_ _])

No./ symbol/name	Setting digit	Function	Initial value [unit]	Network ECT	Network EIP	Network PNT
PE01 **FCT1 Fully closed loop function selection 1	_ _ _ x	Fully closed loop function selection Select the fully closed loop function. 0: Always enabled 1: Switching by fully closed loop selection command from controller (C_CLD) and Input device CLD (Fully closed loop control selection) Fully closed loop selection: Command from controller (C_CLD) / CLD (Fully closed loop selection) (Note) — Control method Off / Off — Semi closed loop control On / Off — Fully closed loop control Off / On — Fully closed loop control On / On — Fully closed loop control Note. It is always off when CLD (Fully closed loop selection) is not assigned in [Pr. PD03] to [Pr. PD05]. To enable the setting, select "Fully closed loop control mode (_ _ 1 _)" of "operation mode selection" in [Pr. PA01]. When "Absolute position detection system" is "Enabled (_ _ _ 1)" in [Pr. PA03], setting "1" will trigger [AL. 37 Parameter error]. When selecting "Profile mode (_ _ _ 2)" of "control mode selection" in [Pr. PA01], setting "1" will trigger [AL. 37 Parameter error].	0h	○		
	_ _ x _	For manufacturer setting	0h			
	_ x _ _		0h			
	x _ _ _		0h			
PE03 *FCT2 Fully closed loop function selection 2	_ _ _ x	Fully closed loop control error detection function selection 0: Disabled 1: Speed deviation error detection 2: Position deviation error detection 3: Speed deviation error/position deviation error detection Refer to table 5.11 for settings.	3h	○	○	○
	_ _ x _	Position deviation error detection system selection 0: Continuous detection system 1: Detection system at stop (detected with command set to "0") Refer to table 5.11 for settings.	0h	○	○	○
	_ x _ _	For manufacturer setting	0h			
	x _ _ _	Fully closed loop control error reset selection 0: Reset disabled (reset by powering off/on enabled) 1: Reset enabled	0h	○	○	○

Table 5.11 Fully closed loop control error detection functions

Setting value	Speed deviation error	Position deviation error: With command	Position deviation error: 0 command
_ _ 0 0	-	-	-
_ _ 0 1	○	-	-
_ _ 0 2	-	○	○
_ _ 0 3	○	○	○
_ _ 1 0	-	-	-
_ _ 1 1	○	-	-
_ _ 1 2	-	-	○
_ _ 1 3	○	-	○

○: Abnormal detection enabled -: Abnormal detection disabled

No./ symbol/name	Setting digit	Function	Initial value [unit]	Network		
				ECT	EIP	PNT
PE04 **FBN Fully closed loop control - Feedback pulse electronic gear 1 - Numerator		Set a numerator of electronic gear for the servo motor encoder pulse at the fully closed loop control. Set the electronic gear so that the number of servo motor encoder pulses for one servo motor revolution is converted to the resolution of the load-side encoder. Setting range: 1 to 65535	1	○	○	○
PE05 **FBD Fully closed loop control - Feedback pulse electronic gear 1 - Denominator		Set a denominator of electronic gear for the servo motor encoder pulse at the fully closed loop control. Set the electronic gear so that the number of servo motor encoder pulses for one servo motor revolution is converted to the resolution of the load-side encoder. Setting range: 1 to 65535	1	○	○	○
PE06 BC1 Fully closed loop control - Speed deviation error detection level		Set [AL. 42.9 Fully closed loop control error by speed deviation] of the fully closed loop control error detection. When the speed deviation between the servo motor encoder and load-side encoder becomes larger than the setting value, the alarm will occur. Setting range: 1 to 50000	400 [r/min]	○	○	○
PE07 BC2 Fully closed loop control - Position deviation error detection level		Set [AL. 42.8 Fully closed loop control error by position deviation] of the fully closed loop control error detection. When the position deviation between the servo motor encoder and load-side encoder becomes larger than the setting value, the alarm will occur. Setting range: 1 to 20000	100 [kpulse]	○	○	○
PE08 DUF Fully closed loop dual feedback filter		Set a dual feedback filter band. For details, refer to section 16.3.1 (7). Setting range: 1 to 4500	10 [rad/s]	○	○	○
PE10 FCT3 Fully closed loop function selection 3	_ _ _ x	For manufacturer setting	0h			
	_ _ x _	Fully closed loop control - Position deviation error detection level - Unit selection 0: 1 kpulse unit 1: 1 pulse unit	0h	○	○	○
	_ x _ _	For manufacturer setting	0h			
	x _ _ _		0h			
PE34 **FBN2 Fully closed loop control - Feedback pulse electronic gear 2 - Numerator		Set a numerator of electronic gear for the servo motor encoder pulse at the fully closed loop control. Set the electronic gear so that the number of servo motor encoder pulses for one servo motor revolution is converted to the resolution of the load-side encoder. For details, refer to section 16.3.1 (5). Setting range: 1 to 65535	1	○	○	○

No./ symbol/name	Setting digit	Function	Initial value [unit]	Network		
				ECT	EIP	PNT
PE35 **FBD2 Fully closed loop control - Feedback pulse electronic gear 2 - Denominator		Set a denominator of electronic gear for the servo motor encoder pulse at the fully closed loop control. Set the electronic gear so that the number of servo motor encoder pulses for one servo motor revolution is converted to the resolution of the load-side encoder. For details, refer to section 16.3.1 (5). Setting range: 1 to 65535	1	○	○	○
PE41 EOP3 Function selection E-3	_ _ _ x	Robust filter selection 0: Disabled 1: Enabled When "Enabled" is set, the machine resonance suppression filter 5 that is set in [Pr. PB51] is not available.	0h	○	○	○
	_ _ x _	For manufacturer setting	0h			
	_ x _ _		0h			
	x _ _ _		0h			
PE44 LMCP Lost motion compensation positive-side compensation value selection		Set the lost motion compensation for when reverse rotation (CW) switches to forward rotation (CCW) in increments of 0.01% assuming the rated torque as 100%. Setting range: 0 to 30000	0 [0.01%]	○	○	○
PE45 LMCN Lost motion compensation negative-side compensation value selection		Set the lost motion compensation for when forward rotation (CCW) switches to reverse rotation (CW) in increments of 0.01% assuming the rated torque as 100%. Setting range: 0 to 30000	0 [0.01%]	○	○	○
PE46 LMFLT Lost motion filter setting		Set the time constant of the lost motion compensation filter in increments of 0.1 ms. If the time constant is "0", the torque is compensated with the value set in [Pr. PE44] and [Pr. PE45]. If the time constant is other than "0", the torque is compensated with the high-pass filter output value of the set time constant, and the lost motion compensation will continue. Setting range: 0 to 30000	0 [0.1 ms]	○	○	○

No./ symbol/name	Setting digit	Function	Initial value [unit]	Network		
				ECT	EIP	PNT
PE47 TOF Torque offset		Set this when canceling unbalanced torque of vertical axis. Set this assuming the rated torque of the servo motor as 100%. The torque offset does not need to be set for a machine where the unbalanced torque does not occur. The torque offset cannot be used for linear servo motors and direct drive motors. Set "0". The torque offset set with this parameter will be enabled in the position mode, velocity mode, and torque mode. Input commands assuming torque offset for the torque mode. Use this parameter when a dynamic change is not necessary in the torque offset. When a dynamic change in the torque offset is required during the operation, use "Torque offset (Index: 60B2h)". "Torque offset (60B2h)" is available with servo amplifiers with software version B2 or later. Setting range: -10000 to 10000	0 [0.01%]	○		
		Set this when canceling unbalanced torque of vertical axis. Set this assuming the rated torque of the servo motor as 100%. The torque offset does not need to be set for a machine where the unbalanced torque does not occur. The torque offset cannot be used for linear servo motors and direct drive motors. Set "0". The torque offset set with this parameter will be enabled in the position mode, velocity mode, and torque mode. Input commands assuming torque offset for the torque mode. Setting range: -10000 to 10000	0 [0.01%]		○	○
PE48 *LMOP Lost motion compensation function selection	_ _ _ x	Lost motion compensation selection 0: Disabled 1: Enabled	0h	○	○	○
	_ _ x _	Unit setting of lost motion compensation non-sensitive band 0: 1 pulse unit 1: 1 kpulse unit	0h	○	○	○
	_ x _ _	For manufacturer setting	0h			
	x _ _ _		0h			
PE49 LMCD Lost motion compensation timing		Set the lost motion compensation timing in increments of 0.1 ms. You can delay the timing to perform the lost motion compensation for the set time. Setting range: 0 to 30000	0 [0.1 ms]	○	○	○
PE50 LMCT Lost motion compensation non-sensitive band		Set the lost motion compensation non-sensitive band. When the fluctuation of droop pulses equals to or less than the setting value, the speed will be 0. Setting can be changed in [Pr. PE48]. Set the parameter per encoder unit. Setting range: 0 to 65535	0 [pulse]/ [kpulse]	○	○	○

5.2.6 Extension setting 3 parameters ([Pr. PF_ _])

<table>
<tr><th rowspan="2">No./
symbol/name</th><th rowspan="2">Setting
digit</th><th rowspan="2">Function</th><th rowspan="2">Initial
value
[unit]</th><th colspan="3">Network</th></tr>
<tr><th>ECT</th><th>EIP</th><th>PNT</th></tr>
<tr><td rowspan="4">PF06
*FOP5
Function
selection F-5</td><td>_ _ _ x</td><td>Electronic dynamic brake selection
0: Automatic (enabled only for specified servo motors)
2: Disabled
Refer to the following table for the specified servo motors.
<table><tr><th>Series</th><th>Servo motor</th></tr><tr><td>HG-KR</td><td>HG-KR053/HG-KR13/HG-KR23/HG-KR43</td></tr><tr><td>HG-MR</td><td>HG-MR053/HG-MR13/HG-MR23/HG-MR43</td></tr><tr><td>HG-SR</td><td>HG-SR51/HG-SR52</td></tr></table></td><td>0h</td><td>○</td><td>○</td><td>○</td></tr>
<tr><td>_ _ x _</td><td rowspan="3">For manufacturer setting</td><td>0h</td><td></td><td></td><td></td></tr>
<tr><td>_ x _ _</td><td>0h</td><td></td><td></td><td></td></tr>
<tr><td>x _ _ _</td><td>0h</td><td></td><td></td><td></td></tr>
<tr><td>PF12
DBT
Electronic
dynamic
brake
operating
time</td><td></td><td>Set an operating time for the electronic dynamic brake.

Setting range: 0 to 10000</td><td>2000
[ms]</td><td>○</td><td>○</td><td>○</td></tr>
<tr><td>PF18
**STOD
STO
diagnosis
error
detection time</td><td></td><td>Set the time from when the error of the STO input or STO circuit is detected until the occurrence of [AL. 68.1 Mismatched STO signal error].
Setting "0" will not trigger [AL. 68.1 Mismatched STO signal error].
The safety level depends on the setting values as follows.
<table><tr><th>Setting value</th><th>STO input diagnosis by TOFB output</th><th>Safety level</th></tr><tr><td rowspan="2">0</td><td>Execute</td><td rowspan="2">EN ISO 13849-1 Category 3 PL d, IEC 61508 SIL 2,
EN 62061 SIL CL2</td></tr><tr><td>Not execute</td></tr><tr><td rowspan="2">1 to 60</td><td>Execute</td><td>EN ISO 13849-1 Category 3 PL e, IEC 61508 SIL 3,
EN 62061 SIL CL3</td></tr><tr><td>Not execute</td><td>EN ISO 13849-1 Category 3 PL d, IEC 61508 SIL 2,
EN 62061 SIL CL2</td></tr></table>
When the short-circuit connector is connected to the CN8 connector, set "0" in the parameter.
When MR-D30 functional safety unit is used, the parameter is not available.
For safety levels at the time of using MR-D30, refer to "MR-D30 Instruction Manual".</td><td>10
[s]</td><td>○</td><td>○</td><td>○</td></tr>
<tr><td>PF21
DRT
Drive
recorder
switching
time setting</td><td></td><td>Set a drive recorder switching time.
When a USB communication is cut during using a graph function, the function will be changed to the drive recorder function after the setting time of this parameter.
When a value from "1" to "32767" is set, the function will be switched to the drive recorder function after the set time.
However, when "0" is set, it will be switched after 600 s.
When "-1" is set, the drive recorder function is disabled.

Setting range: -1 to 32767</td><td>0
[s]</td><td>○</td><td>○</td><td>○</td></tr>
</table>

No./ symbol/name	Setting digit	Function	Initial value [unit]	Network		
				ECT	EIP	PNT
PF23 OSCL1 Vibration tough drive - Oscillation detection level		Set a filter readjustment sensitivity of [Pr. PB13 Machine resonance suppression filter 1] and [Pr. PB15 Machine resonance suppression filter 2] while the vibration tough drive is enabled. Note that setting "0" will be 50%. Example: When you set "50" to the parameter, the filter will be readjusted at the time of 50% or more oscillation level. Setting range: 0 to 100	50 [%]	○	○	○
PF24 *OSCL2 Vibration tough drive function selection	_ _ _ x	Oscillation detection alarm selection Select whether to generate an alarm or a warning when an oscillation continues at a filter readjustment sensitivity level of [Pr. PF23]. The setting is always enabled regardless of the vibration tough drive in [Pr. PA20]. 0: [AL. 54 Oscillation detection] will occur at oscillation detection. 1: [AL. F3.1 Oscillation detection warning] will occur at oscillation detection. 2: Oscillation detection function disabled	0h	○	○	○
	_ _ x _	For manufacturer setting	0h			
	_ x _ _		0h			
	x _ _ _		0h			
PF25 CVAT SEMI-F47 function - Instantaneous power failure detection time		Set the time of the [AL. 10.1 Voltage drop in the control circuit power] occurrence. To comply with SEMI-F47 standard, it is unnecessary to change the initial value (200 ms). When the instantaneous power failure time exceeds 200 ms, and the instantaneous power failure voltage is less than 70% of the rated input voltage, the power may be normally turned off even if a value larger than 200 ms is set in the parameter. To disable the parameter setting value, select "Disabled (_ 0 _ _)" of "SEMI-F47 function selection" in [Pr. PA20]. Setting range: 30 to 500	200 [ms]	○	○	○
PF31 FRIC Machine diagnosis function - Friction judgment speed		Set a servo motor speed that divides a friction estimation area into high and low during the friction estimation process of the machine diagnosis. However, setting "0" will be the value half of the rated speed. When your operation pattern is under rated speed, we recommend that you set half value to the maximum speed with this. 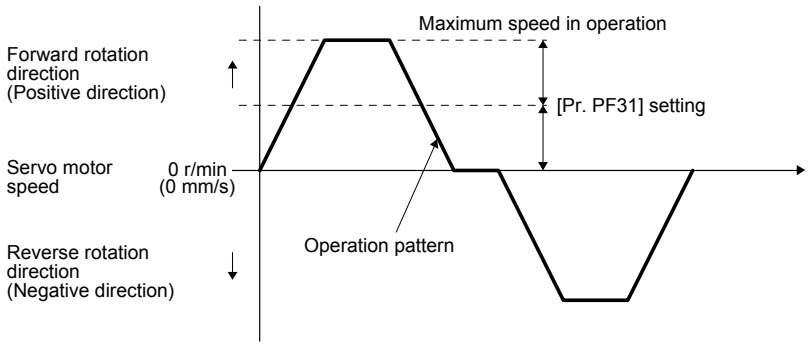 Setting range: 0 to permissible instantaneous speed	0 [r/min]/ [mm/s]	○	○	○

5.2.7 Linear servo motor/DD motor setting parameters ([Pr. PL_ _])

No./ symbol/name	Setting digit	Function	Initial value [unit]	Network		
				ECT	EIP	PNT
PL01 **LIT1 Linear servo motor/DD motor function selection 1	_ _ _ x	Linear servo motor/DD motor magnetic pole detection selection The setting value "0" will be enabled only with absolute position linear encoders. 0: Magnetic pole detection disabled 1: Magnetic pole detection at first servo-on 5: Magnetic pole detection at every servo-on	1h	○	○	○
	_ _ x _	For manufacturer setting	0h			
	_ x _ _	Stop interval selection at the home position return Set a stop interval for the dog type home position return. The digit is enabled only for linear servo motors. 0: 2^{13} (= 8192) pulses 1: 2^{17} (= 131072) pulses 2: 2^{18} (= 262144) pulses 3: 2^{20} (= 1048576) pulses 4: 2^{22} (= 4194304) pulses 5: 2^{24} (= 16777216) pulses 6: 2^{26} (= 67108864) pulses	3h	○	○	○
	x _ _ _	For manufacturer setting	0h			
PL02 **LIM Linear encoder resolution - Numerator		Set a linear encoder resolution with the settings of [Pr. PL02] and [Pr. PL03]. Set a numerator to [Pr. PL02]. This is enabled only for linear servo motors. Setting range: 1 to 65535	1000 [μm]	○	○	○
PL03 **LID Linear encoder resolution - Denominator		Set a linear encoder resolution with the settings of [Pr. PL02] and [Pr. PL03]. Set a denominator to [Pr. PL03]. This is enabled only for linear servo motors. Setting range: 1 to 65535	1000 [μm]	○	○	○

<table>
<tr><th>No./
symbol/name</th><th>Setting
digit</th><th>Function</th><th>Initial
value
[unit]</th><th colspan="3">Network</th></tr>
<tr><th></th><th></th><th></th><th></th><th>ECT</th><th>EIP</th><th>PNT</th></tr>
<tr><td rowspan="3">PL04
*LIT2
Linear servo motor/DD motor function selection 2</td><td>_ _ _ x</td><td>[AL. 42 Servo control error] detection function selection
Refer to the following table.
<table>
<tr><th>Setting value</th><th>Thrust/torque deviation error (Note)</th><th>Speed deviation error (Note)</th><th>Position deviation error (Note)</th></tr>
<tr><td>0</td><td rowspan="4">Disabled</td><td rowspan="2">Disabled</td><td>Disabled</td></tr>
<tr><td>1</td><td>Enabled</td></tr>
<tr><td>2</td><td rowspan="2">Enabled</td><td>Disabled</td></tr>
<tr><td>3</td><td>Enabled</td></tr>
<tr><td>4</td><td rowspan="4">Enabled</td><td rowspan="2">Disabled</td><td>Disabled</td></tr>
<tr><td>5</td><td>Enabled</td></tr>
<tr><td>6</td><td rowspan="2">Enabled</td><td>Disabled</td></tr>
<tr><td>7</td><td>Enabled</td></tr>
</table>
Note. Refer to chapter 14 and 15 for details of each deviation error.</td><td>3h</td><td>○</td><td>○</td><td>○</td></tr>
<tr><td>_ _ x _</td><td rowspan="2">For manufacturer setting</td><td>0h</td><td></td><td></td><td></td></tr>
<tr><td>_ x _ _</td><td>0h</td><td></td><td></td><td></td></tr>
<tr><td>x _ _ _</td><td>[AL. 42 Servo control error] detection function controller reset condition selection
0: Reset disabled (reset by powering off/on enabled)
1: Reset enabled</td><td>0h</td><td>○</td><td>○</td><td>○</td></tr>
<tr><td>PL05
LB1
Position deviation error detection level</td><td></td><td>Set a position deviation error detection level of the servo control error detection.
When the deviation between a model feedback position and actual feedback position is larger than the setting value, [AL. 42 Servo control error] will occur.
However, when "0" is set, the level vary depending on the operation mode in [Pr. PA01].
Linear servo motor: 50 mm
Direct drive motor: 0.09 rev

Setting range: 0 to 1000</td><td>0
[mm]/
[0.01 rev]</td><td>○</td><td>○</td><td>○</td></tr>
<tr><td>PL06
LB2
Speed deviation error detection level</td><td></td><td>Set a speed deviation error detection level of the servo control error detection.
When the deviation between a model feedback speed and actual feedback speed is larger than the setting value, [AL. 42 Servo control error] will occur.
However, when "0" is set, the level vary depending on the operation mode in [Pr. PA01].
Linear servo motor: 1000 mm/s
Direct drive motor: 100 r/min

Setting range: 0 to 5000</td><td>0
[mm/s]/
[r/min]</td><td>○</td><td>○</td><td>○</td></tr>
<tr><td>PL07
LB3
Torque/thrust deviation error detection level</td><td></td><td>Set a torque/thrust deviation error detection level of the servo control error detection.
When the deviation between a current command and current feedback is larger than the setting value, [AL. 42.3 Servo control error by torque/thrust deviation] will occur.

Setting range: 0 to 1000</td><td>100
[%]</td><td>○</td><td>○</td><td>○</td></tr>
<tr><td rowspan="4">PL08
*LIT3
Linear servo motor/DD motor function selection 3</td><td>_ _ _ x</td><td>Magnetic pole detection method selection
0: Position detection method
4: Minute position detection method</td><td>0h</td><td>○</td><td>○</td><td>○</td></tr>
<tr><td>_ _ x _</td><td>For manufacturer setting</td><td>1h</td><td></td><td></td><td></td></tr>
<tr><td>_ x _ _</td><td>Magnetic pole detection - Stroke limit enabled/disabled selection
0: Enabled
1: Disabled</td><td>0h</td><td>○</td><td>○</td><td>○</td></tr>
<tr><td>x _ _ _</td><td>For manufacturer setting</td><td>0h</td><td></td><td></td><td></td></tr>
</table>

No./ symbol/name	Setting digit	Function	Initial value [unit]	Network		
				ECT	EIP	PNT
PL09 LPWM Magnetic pole detection voltage level		Set a direct current exciting voltage level during the magnetic pole detection. If [AL. 32 Overcurrent], [AL. 50 Overload 1], or [AL. 51 Overload 2] occurs during the magnetic pole detection, decrease the setting value. If [AL. 27 Initial magnetic pole detection error] occurs during the magnetic pole detection, increase the setting value. Setting range: 0 to 100	30 [%]	○	○	○
PL17 LTSTS Magnetic pole detection - Minute position detection method - Function selection	_ _ _ x	Response selection Set a response of the minute position detection method. When reducing a travel distance at the magnetic pole detection, increase the setting value. Refer to table 5.12 for settings.	0h	○	○	○
	_ _ x _	Load to motor mass ratio/load to motor inertia ratio selection Select a load to mass of the linear servo motor primary-side ratio or load to mass of the direct drive motor inertia ratio used at the minute position detection method. Set a closest value to the actual load. Refer to table 5.13 for settings.	0h	○	○	○
	_ x _ _	For manufacturer setting	0h			
	x _ _ _		0h			

Table 5.12 Response of minute position detection method at magnetic pole detection

Setting value	Response
_ _ _ 0	Low response
_ _ _ 1	↑
_ _ _ 2	
_ _ _ 3	
_ _ _ 4	
_ _ _ 5	
_ _ _ 6	↓
_ _ _ 7	Middle response

Setting value	Response
_ _ _ 8	Middle response
_ _ _ 9	↑
_ _ _ A	
_ _ _ B	
_ _ _ C	
_ _ _ D	
_ _ _ E	↓
_ _ _ F	High response

Table 5.13 Load to motor mass ratio/load to motor inertia ratio

Setting value	Load to motor mass ratio/load to motor inertia ratio
_ _ 0 _	10 times or less
_ _ 1 _	10 times
_ _ 2 _	20 times
_ _ 3 _	30 times
_ _ 4 _	40 times
_ _ 5 _	50 times
_ _ 6 _	60 times
_ _ 7 _	70 times

Setting value	Load to motor mass ratio/load to motor inertia ratio
_ _ 8 _	80 times
_ _ 9 _	90 times
_ _ A _	100 times
_ _ B _	110 times
_ _ C _	120 times
_ _ D _	130 times
_ _ E _	140 times
_ _ F _	150 times or more

PL18 IDLV Magnetic pole detection - Minute position detection method - Identification signal amplitude		Set an identification signal amplitude used in the minute position detection method. This parameter is enabled only when the magnetic pole detection is the minute position detection method. However, setting "0" will be 100% amplitude. Setting range: 0 to 100	0 [%]	○	○	○

5.2.8 Positioning control parameters ([Pr. PT_ _])

No./ symbol/name	Setting digit	Function	Initial value [unit]	Network		
				ECT	EIP	PNT
PT01 **CTY Command mode selection	_ _ _ x	For manufacturer setting	0h			
	_ _ x _		0h			
	_ x _ _	Position data unit 0: mm 1: inch 2: degree 3: pulse This function will be enabled in the profile mode and point table method. The unit is [pulse] in the cyclic synchronous mode. In the cyclic synchronous mode, setting other values than "3" will trigger [AL. 37]. If "2" is set in the point table method, [AL. 37] will occur. This digit can be set with a servo amplifiers with software version B0 or later. The setting values of "0" and "1" are available with servo amplifiers with software version B2 or later.	3h	○	○	○
	x _ _ _	For manufacturer setting	0h			

No./ symbol/name	Setting digit	Function	Initial value [unit]	Network		
				ECT	EIP	PNT
PT03 *FTY Feeding function selection	_ _ _ x	Feed length multiplication [STM] 0: × 1 1: × 10 2: × 100 3: × 1000 This function will be enabled in the profile mode and point table method. This function will be disabled when [degree] or [pulse] of "Position data unit" is set in [Pr. PT01]. This digit can be set with servo amplifiers with software version B2 or later.	0h	○	○	○
	_ _ x _	For manufacturer setting	0h			
	_ x _ _	Shortest rotation selection per degree 0: Rotation direction specifying 1: Shortest rotation 2: Address decreasing direction 3: Address increasing direction This function will be enabled in the profile mode. Setting a value immediately enables this parameter. This digit can be set with a servo amplifier with software version B0 or later. This parameter corresponds to "Positioning option code (Index: 60F2h)". When this parameter is mapped for the PDO communication, the value written with MR Configurator2 is overwritten with the controller. Thus, do not write a value with MR Configurator2.	0h	○		
		Shortest rotation selection per degree 0: Rotation direction specifying 1: Shortest rotation 2: Address decreasing direction 3: Address increasing direction This function will be enabled in the profile mode. Setting a value immediately enables this parameter. This digit can be set with a servo amplifier with software version B0 or later. This parameter corresponds to "Positioning option code (Class ID: 64h, Ins ID: 60F2h, Attr ID: 0)". When this parameter is mapped for the I/O communication, the value written with MR Configurator2 is overwritten with the controller. Thus, do not write a value with MR Configurator2.	0h		○	
		Shortest rotation selection per degree 0: Rotation direction specifying 1: Shortest rotation 2: Address decreasing direction 3: Address increasing direction This function will be enabled in the profile mode. Setting a value immediately enables this parameter. This digit can be set with a servo amplifier with software version B0 or later. This parameter corresponds to "Positioning option code (PNU: 24818, Sub: 0)". When this parameter is mapped for the Process Data communication, the value written with MR Configurator2 is overwritten with the controller. Thus, do not write a value with MR Configurator2.	0h			○
	x _ _ _	For manufacturer setting	0h			

No./ symbol/name	Setting digit	Function	Initial value [unit]	Network		
				ECT	EIP	PNT
PT05 ZRF Home position return speed		Set the servo motor speed for the home position return. The fractional portion of the parameter will be rounded down. The setting value will be clamped at the instantaneous permissible speed. This parameter corresponds to "Speed during search for switch (Index: 6099h, Sub: 1)". When this parameter is mapped for the PDO communication, the value written with MR Configurator2 is overwritten with the controller. Thus, do not write a value with MR Configurator2. Setting range: 0.00 to 167772.15	100.00 [r/min]/ [mm/s]	○		
		Set the servo motor speed for the home position return. The fractional portion of the parameter will be rounded down. The setting value will be clamped at the instantaneous permissible speed. This parameter corresponds to "Speed during search for switch (Class ID: 64h, Ins ID: 6099h, Attr ID: 1)". When this parameter is mapped for the I/O communication, the value written with MR Configurator2 is overwritten with the controller. Thus, do not write a value with MR Configurator2. Setting range: 0.00 to 167772.15	100.00 [r/min]/ [mm/s]		○	
		Set the servo motor speed for the home position return. The fractional portion of the parameter will be rounded down. The setting value will be clamped at the instantaneous permissible speed. This parameter corresponds to "Speed during search for switch (PNU: 24729, Sub: 0)". When this parameter is mapped for the Process Data communication, the value written with MR Configurator2 is overwritten with the controller. Thus, do not write a value with MR Configurator2. Setting range: 0.00 to 167772.15	100.00 [r/min]/ [mm/s]			○
PT06 CRF Creep speed		Set a creep speed after proximity dog at home position return. The fractional portion of the parameter will be rounded down. The setting value will be clamped at the instantaneous permissible speed. This parameter corresponds to "Speed during search for zero (Index: 6099h, Sub: 2)". When this parameter is mapped for the PDO communication, the value written with MR Configurator2 is overwritten with the controller. Thus, do not write a value with MR Configurator2. Setting range: 0.00 to 167772.15	10.00 [r/min]/ [mm/s]	○		
		Set a creep speed after proximity dog at home position return. The fractional portion of the parameter will be rounded down. The setting value will be clamped at the instantaneous permissible speed. This parameter corresponds to "Speed during search for switch (Class ID: 64h, Ins ID: 6099h, Attr ID: 2)". When this parameter is mapped for the I/O communication, the value written with MR Configurator2 is overwritten with the controller. Thus, do not write a value with MR Configurator2. Setting range: 0.00 to 167772.15	10.00 [r/min]/ [mm/s]		○	
		Set a creep speed after proximity dog at home position return. The fractional portion of the parameter will be rounded down. The setting value will be clamped at the instantaneous permissible speed. This parameter corresponds to "Speed during search for switch (PNU: 24729, Sub: 1)". When this parameter is mapped for the Process Data communication, the value written with MR Configurator2 is overwritten with the controller. Thus, do not write a value with MR Configurator2. Setting range: 0.00 to 167772.15	10.00 [r/min]/ [mm/s]			○

No./ symbol/name	Setting digit	Function	Initial value [unit]	Network		
				ECT	EIP	PNT
PT07 ZST Home position shift distance		Set a shift distance from the Z-phase pulse detection position in the encoder. Up to 22147483647 can be set with [Pr. PT69]. The unit will be as follows with the setting of [Pr. PA01]. ・In the cyclic synchronous mode The unit is [pulse]. ・In the profile mode and the point table method The unit can be changed to [μm], 10^{-4} [inch], 10^{-3} [degree] or [pulse] with the setting of [Pr. PT01]. ・In the indexer method It will be command unit [pulse]. (A load-side rotation expressed by the number of servo motor resolution pulses) Refer to the Function column of [Pr. PA10] for the command unit [pulse]. Setting range: 0 to 65535	0 Refer to Function column for unit.	○	○	○
PT09 DCT Travel distance after proximity dog		Set a travel distance after proximity dog at home position return for the count type (front end detection, Z-phase reference) (Homing method -2, -34) and the following dog references. ・Dog type rear end reference home position return (Homing method -6, -38) ・Count type front end reference home position return (Homing method -7, -39) ・Dog type front end reference home position return (Homing method -10, -42) ・Homing without index pulse (Homing method 19, 20, 21, 22, 23, 24, 27, 28) Up to 2147483647 can be set with the setting of [Pr. PT71]. This function will be enabled in the cyclic synchronous mode, profile mode and point table method. The unit can be changed to 10^{STM} [μm], $10^{(STM-4)}$ [inch], 10^{-3} [degree] or [pulse] with the setting of [Pr. PT01]. Setting range: 0 to 65535	0 Refer to Function column for unit.	○	○	○
PT10 ZTM Stopper type home position return stopper time		Set a time from a moving part touches the stopper and torques reaches to the torque limit of [Pr. PT11 Stopper type home position return - Torque limit value] to a home position is set for the stopper type home position return. This function will be enabled in the cyclic synchronous mode, profile mode and point table method. Setting range: 5 to 1000	100 [ms]	○	○	○
PT11 ZTT Stopper type home position return torque limit value		Set a torque limit value with [%] to the maximum torque at stopper type home position return. This function will be enabled in the cyclic synchronous mode, profile mode and point table method. Setting range: 0.1 to 100.0	15.0 [%]	○	○	○
PT12 CRP Rough match output range		Set a range of the command remaining distance which outputs S_CPO (Rough match). This function will be enabled in the point table method and the indexer method. The unit will be as follows, depending on the control mode. ・In the point table method The unit can be changed to 10^{STM} [μm], $10^{(STM-4)}$ [inch], 10^{-3} [degree] or [pulse] with the setting of [Pr. PT01]. ・In the indexer method It will be command unit [pulse]. (A load-side rotation expressed by the number of servo motor resolution pulses) Refer to the Function column of [Pr. PA10] for the command unit [pulse]. This parameter setting is available with servo amplifiers with software version B2 or later. Setting range: 0 to 65535	0 Refer to Function column for unit.	○		○

No./ symbol/name	Setting digit	Function	Initial value [unit]	Network		
				ECT	EIP	PNT
PT15 LMPL Software limit + (lower four digits)		Set an address increasing side of the software stroke limit. Upper and lower are a set. Set an address in hexadecimal. Setting address: ___ ___ ___ ___ ___ ___ ___ ___ Upper four digits — [Pr. PT16] Lower four digits — [Pr. PT15] Setting an identical value for "Software limit -" and this parameter will disable the software limit. (Refer to section 5.3.) When changing the setting with the parameter, change it during servo-off, in the homing mode (hm), velocity mode, or torque mode. In the position mode during servo-on, changing the setting in a certain order may trigger [AL. 35], [AL. 69], or [AL. 98]. This function will be enabled in the cyclic synchronous mode, profile mode and point table method. The unit can be changed to 10^{STM} [μm], $10^{(STM-4)}$ [inch], 10^{-3} [degree] or [pulse] according to the setting of [Pr. PT01]. This parameter corresponds to "Max position limit (Index: 607Dh, Sub: 2)". When this parameter is mapped for the PDO communication, the value written with MR Configurator2 is overwritten with the controller. Thus, do not write a value with MR Configurator2. Setting range: 0000h 0000h to FFFFh FFFFh	0000h Refer to Function column for unit.	○		
		Set an address increasing side of the software stroke limit. Upper and lower are a set. Set an address in hexadecimal. Setting address: ___ ___ ___ ___ ___ ___ ___ ___ Upper four digits — [Pr. PT16] Lower four digits — [Pr. PT15] Setting an identical value for "Software limit -" and this parameter will disable the software limit. (Refer to section 5.3.) When changing the setting with the parameter, change it during servo-off, in the homing mode (hm), velocity mode, or torque mode. In the position mode during servo-on, changing the setting in a certain order may trigger [AL. 35], [AL. 69], or [AL. 98]. This function will be enabled in the profile mode. The unit can be changed to 10^{STM} [μm], $10^{(STM-4)}$ [inch], 10^{-3} [degree] or [pulse] according to the setting of [Pr. PT01]. This parameter corresponds to "Max position limit (Class ID: 64h, Ins ID: 607Dh, Attr ID: 2)". When this parameter is mapped for the I/O communication, the value written with MR Configurator2 is overwritten with the controller. Thus, do not write a value with MR Configurator2. Setting range: 0000h 0000h to FFFFh FFFFh	0000h Refer to Function column for unit.		○	

No./ symbol/name	Setting digit	Function	Initial value [unit]	Network		
				ECT	EIP	PNT
PT15 LMPL Software limit + (lower four digits)		Set an address increasing side of the software stroke limit. Upper and lower are a set. Set an address in hexadecimal. Setting address: _ _ _ _ _ _ _ _ Upper four digits — [Pr. PT16] Lower four digits — [Pr. PT15] Setting an identical value for "Software limit -" and this parameter will disable the software limit. (Refer to section 5.3.) When changing the setting with the parameter, change it during servo-off, in the homing mode (hm), velocity mode, or torque mode. In the position mode during servo-on, changing the setting in a certain order may trigger [AL. 35], [AL. 69], or [AL. 98]. This function will be enabled in the profile mode and point table method. The unit can be changed to 10^{STM} [μm], $10^{(STM-4)}$ [inch], 10^{-3} [degree] or [pulse] according to the setting of [Pr. PT01]. This parameter corresponds to "Max position limit (PNU: 24701, Sub: 1)". When this parameter is mapped for the Process Data communication, the value written with MR Configurator2 is overwritten with the controller. Thus, do not write a value with MR Configurator2. Setting range: 0000h 0000h to FFFFh FFFFh	0000h Refer to Function column for unit.			○
PT16 LMPH Software limit + (upper four digits)		Set an address increasing side of the software stroke limit. Upper and lower are a set. Refer to [Pr. PT15] for details. The unit can be changed to 10^{STM} [μm], $10^{(STM-4)}$ [inch], 10^{-3} [degree] or [pulse] according to the setting of [Pr. PT01].	0000h Refer to Function column for unit.	○	○	○

No./ symbol/name	Setting digit	Function	Initial value [unit]	Network		
				ECT	EIP	PNT
PT17 LMNL Software limit - (lower four digits)		Set an address decreasing side of the software stroke limit. Upper and lower are a set. Set an address in hexadecimal. Setting address: __ __ __ __ __ __ __ __ Upper four digits / Lower four digits [Pr. PT17] [Pr. PT18] Setting a same value with "Software limit +" will disable the software stroke limit. (Refer to section 5.3.) When changing the setting with the parameter, change it during servo-off, in the homing mode (hm), velocity mode, or torque mode. In the position mode during servo-on, changing the setting in a certain order may trigger [AL. 35], [AL. 69], or [AL. 98]. This function will be enabled in the cyclic synchronous mode, profile mode and point table method. The unit can be changed to 10^{STM} [μm], $10^{(STM-4)}$ [inch], 10^{-3} [degree] or [pulse] according to the setting of [Pr. PT01]. This parameter corresponds to "Min position limit (Index: 607Dh, Sub: 1)". When this parameter is mapped for the PDO communication, the value written with MR Configurator2 is overwritten with the controller. Thus, do not write a value with MR Configurator2. Setting range: 0000h 0000h to FFFFh FFFFh	0000h Refer to Function column for unit.	○		
		Set an address decreasing side of the software stroke limit. Upper and lower are a set. Set an address in hexadecimal. Setting address: __ __ __ __ __ __ __ __ Upper four digits / Lower four digits [Pr. PT17] [Pr. PT18] Setting a same value with "Software limit +" will disable the software stroke limit. (Refer to section 5.3.) When changing the setting with the parameter, change it during servo-off, in the homing mode (hm), velocity mode, or torque mode. In the position mode during servo-on, changing the setting in a certain order may trigger [AL. 35], [AL. 69], or [AL. 98]. This function will be enabled in the profile mode. The unit can be changed to 10^{STM} [μm], $10^{(STM-4)}$ [inch], 10^{-3} [degree] or [pulse] according to the setting of [Pr. PT01]. This parameter corresponds to "Min position limit (Class ID: 64h, Ins ID: 607Dh, Attr ID: 1)". When this parameter is mapped for the I/O communication, the value written with MR Configurator2 is overwritten with the controller. Thus, do not write a value with MR Configurator2. Setting range: 0000h 0000h to FFFFh FFFFh	0000h Refer to Function column for unit.		○	

No./ symbol/name	Setting digit	Function	Initial value [unit]	Network		
				ECT	EIP	PNT
PT17 LMNL Software limit - (lower four digits)		Set an address decreasing side of the software stroke limit. Upper and lower are a set. Set an address in hexadecimal. Setting address: ___ ___ ___ ___ ___ ___ ___ ___ Upper four digits / Lower four digits [Pr. PT17] [Pr. PT18] Setting a same value with "Software limit +" will disable the software stroke limit. (Refer to section 5.3.) When changing the setting with the parameter, change it during servo-off, in the homing mode (hm), velocity mode, or torque mode. In the position mode during servo-on, changing the setting in a certain order may trigger [AL. 35], [AL. 69], or [AL. 98]. This function will be enabled in the profile mode and point table method. The unit can be changed to 10^{STM} [μm], $10^{(STM-4)}$ [inch], 10^{-3} [degree] or [pulse] according to the setting of [Pr. PT01]. This parameter corresponds to "Min position limit (PNU: 24701, Sub: 0)". When this parameter is mapped for the Process Data communication, the value written with MR Configurator2 is overwritten with the controller. Thus, do not write a value with MR Configurator2. Setting range: 0000h 0000h to FFFFh FFFFh	0000h Refer to Function column for unit.			○
PT18 LMNH Software limit - (upper four digits)		Set an address decreasing side of the software stroke limit. Upper and lower are a set. Refer to [Pr. PT17] for details. The unit can be changed to 10^{STM} [μm], $10^{(STM-4)}$ [inch], 10^{-3} [degree] or [pulse] according to the setting of [Pr. PT01].	0000h Refer to Function column for unit.	○	○	○
PT19 *LPPL Position range output address + (lower four digits)		Set an address increasing side of the position range output address. Upper and lower are a set. Set a range which S_POT (Position range) turns on with [Pr. PT19] to [Pr. PT22]. Setting address: ___ ___ ___ ___ ___ ___ ___ ___ Upper four digits / Lower four digits [Pr. PT19] [Pr. PT20] This function will be enabled in the point table method. The unit can be changed to 10^{STM} [μm], $10^{(STM-4)}$ [inch], 10^{-3} [degree] or [pulse] with the setting of [Pr. PT01]. This parameter setting is available with servo amplifiers with software version B2 or later. Setting range: 0000h 0000h to FFFFh FFFFh	0000h Refer to Function column for unit.	○		○
PT20 *LPPH Position range output address + (upper four digits)			0000h Refer to Function column for unit.			

No./ symbol/name	Setting digit	Function	Initial value [unit]	Network		
				ECT	EIP	PNT
PT21 *LNPL Position range output address - (lower four digits)		Set an address decreasing side of the position range output address. Upper and lower are a set. Set a range which S_POT (Position range) turns on with [Pr. PT19] to [Pr. PT22]. Setting address: ___ ___ ___ ___ ___ ___ ___ ___ Upper four digits — [Pr. PT22] Lower four digits — [Pr. PT21] This function will be enabled in the point table method. The unit can be changed to 10^{STM} [μm], $10^{(STM-4)}$ [inch], 10^{-3} [degree] or [pulse] with the setting of [Pr. PT01]. This parameter setting is available with servo amplifiers with software version B2 or later. Setting range: 0000h 0000h to FFFFh FFFFh	0000h Refer to Function column for unit.	○		○
PT22 *LNPH Position range output address - (upper four digits)			0000h Refer to Function column for unit.			
PT26 *TOP2 Function selection T-2	_ _ _ x	Electronic gear fraction clear selection 0: Disabled 1: Enabled Selecting "Enabled" will clear a fraction of the previous command by the electronic gear at start of the profile position mode (pp) and the point table mode (pt). This function will be enabled in the profile mode.	0h	○	○	○
	_ _ x _	For manufacturer setting	0h			
	_ x _ _		0h			
	x _ _ _		0h			
PT27 *ODM Indexer method - Operation mode selection	_ _ _ x	For manufacturer setting	0h			
	_ _ x _	Jog mode method selection 0: Station JOG operation 1: JOG operation This function will be enabled in the indexer method. This parameter setting is available with servo amplifiers with software version B2 or later.	0h	○		○
	_ x _ _	For manufacturer setting	0h			
	x _ _ _		0h			
PT28 *STN Number of stations per rotation		Set the number of stations per rotation (number of indexer stations). Setting "2" or less will be "2". This function will be enabled in the indexer method. This parameter setting is available with servo amplifiers with software version B2 or later. Setting range: 0 to 255	8 [Stations]	○		○

No./ symbol/name	Setting digit	Function	Initial value [unit]	Network ECT	Network EIP	Network PNT
PT29 *TOP3 Function selection T-3	Set the DOG polarity.					
	_ _ _ x (HEX)	_ _ _ x (BIN): DOG (Proximity dog) polarity selection ・Profile mode, cyclic synchronous mode and point table method 0: Dog detection with off 1: Dog detection with on ・Indexer method 0: Dog detection with on 1: Dog detection with off	0h	○	○	○
		_ _ x _ (BIN): For manufacturer setting				
		_ x _ _ (BIN): For manufacturer setting				
		x _ _ _ (BIN): For manufacturer setting				
	_ _ x _	For manufacturer setting	0h			
	_ x _ _		0h			
	x _ _ _		0h			
	Convert the setting value into hexadecimal as follows.					
PT34 **PDEF Point table default		Use this parameter when initializing point tables. A point table will be the following status by being initialized. Point table: All "0" Initialize the point tables with the following procedures: 1) Set "5001h" to this parameter. 2) Cycle the power of the servo amplifier. After the servo amplifier power is on, the initialization completes in about 20 s. After the initialization, the setting of this parameter will be "0000h" automatically. This function will be enabled in the point table method. This parameter setting is available with servo amplifiers with software version B2 or later.	0000h	○		○
PT35 *TOP5 Function selection T-5	_ _ _ x	Superimposed synchronous control selection 0: Disabled 1: Enabled This function will be enabled in the profile mode. Setting "1" in other control modes will trigger [AL. 37 Parameter error]. This function will be enabled in the standard control mode. Setting "1" in other operation modes will trigger [AL. 37 Parameter error]. This function can be used when the scale measurement function is enabled. Setting "1" when the scale measurement function is disabled will trigger [AL. 37 Parameter error]. Setting "1" when the MR-D30 has been connected or the degree unit has been set will trigger [AL. 37 Parameter error]. For details, refer to respective communication method manuals of "MR-J4-_TM_ Servo Amplifier Instruction Manual". This digit can be set with a servo amplifier with software version B0 or later.	0h		○	
	_ _ x _	For manufacturer setting	0h			
	_ x _ _		0h			
	x _ _ _		0h			

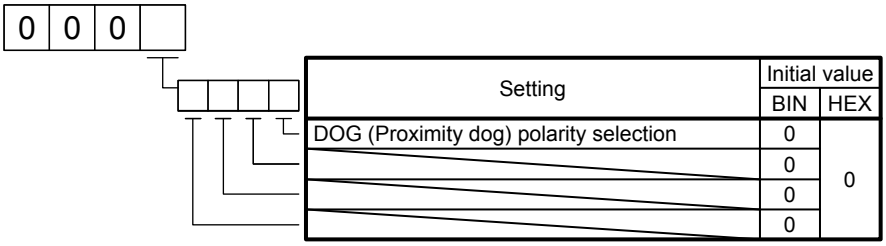

Setting	Initial value BIN	Initial value HEX
DOG (Proximity dog) polarity selection	0	0
	0	
	0	
	0	

No./ symbol/name	Setting digit	Function	Initial value [unit]	Network		
				ECT	EIP	PNT
PT39 INT Torque limit delay time		Set the delay time from outputting S_MEND (Travel completion) to enabling "Torque limit value2 (Index: 2D6Bh)". This function will be enabled in the indexer method. This parameter setting is available with servo amplifiers with software version B2 or later. Setting range: 0 to 1000	100 [ms]	○		
		Set the delay time from outputting S_MEND (Travel completion) to enabling "Torque limit value2 (PNU: 11627, Sub: 0)". This function will be enabled in the indexer method. This parameter setting is available with servo amplifiers with software version B2 or later. Setting range: 0 to 1000	100 [ms]			○
PT40 *SZS Station home position shift distance		Set a station home position shift distance with encoder pulse unit at home position return. Setting this parameter enables to shift the station home position (station No. 0) to the position for home position return. The following shows cautions for the setting. ・The setting of the station home position shift is disabled at home position return. Cycling the power will enable the setting. ・When a home position shift distance is longer than the in-position range, INP/S_INP (In-position) will not be on regardless of cycle of the power after home position return. This function will be enabled in the indexer method. This parameter setting is available with servo amplifiers with software version B2 or later. Setting range: -32000 to 32000	0 [pulse]	○		○
PT41 ORP Home position return inhibit function selection	_ _ _ x	Home position return inhibit selection 0: Disabled (home position return allowed) 1: Enabled (home position return inhibited)	0h	○	○	○
	_ _ x _	For manufacturer setting	0h			
	_ x _ _		0h			
	x _ _ _		0h			

No./ symbol/name	Setting digit	Function	Initial value [unit]	Network		
				ECT	EIP	PNT
PT45 HMM Home position return type		Set a home position return type. Refer to the following table for details. If the home position return starts after a value other than the setting values is set, "Homing error" occurs and home position return cannot be executed. In the indexer method, if the home position return starts after values other than "-1", "-33", "-3", "35" and "37" are set, "Homing error" occurs and home position return cannot be executed. This parameter corresponds to "Homing method (Index: 6098h)". When this parameter is mapped for the PDO communication, the value written with MR Configurator2 is overwritten with the controller. Thus, do not write a value with MR Configurator2.	37	○		
		Set a home position return type. Refer to the following table for details. If the home position return starts after a value other than the setting values is set, "Homing error" occurs and home position return cannot be executed. This parameter corresponds to "Homing method (Class ID: 64h, Ins ID: 6098h, Attr ID: 0)". When this parameter is mapped for the I/O communication, the value written with MR Configurator2 is overwritten with the controller. Thus, do not write a value with MR Configurator2.	37		○	
		Set a home position return type. Refer to the following table for details. If the home position return starts after a value other than the setting values is set, "Homing error" occurs and home position return cannot be executed. In the indexer method, if the home position return starts after values other than "-1", "-33", "-3", "35" and "37" are set, "Homing error" occurs and home position return cannot be executed. This parameter corresponds to "Homing method (PNU: 24728, Sub: 0)". When this parameter is mapped for the Process Data communication, the value written with MR Configurator2 is overwritten with the controller. Thus, do not write a value with MR Configurator2.	37			○

No./ symbol/name	Setting digit	Function	Initial value [unit]	Network		
				ECT	EIP	PNT
PT45 HMM Home position return type						

Setting value	Home position return direction	How to execute home position return
-1	Address increasing direction	Dog type (Rear end detection Zphase reference)/torque limit changing dog type (Front end detection, Zphase reference)
-2		Count type (front end detection, Z-phase reference)
-3		Data set type/torque limit changing data set type
-4		Stopper type (stopper position reference)
-6		Dog type (rear end detection, rear end reference)
-7		Count type (front end detection, front end reference)
-8		Dog cradle type
-9		Dog type last Z-phase reference
-10		Dog type front end reference
-11		Dogless Z-phase reference

Setting value	Home position return direction	How to execute home position return
-33	Address decreasing direction	Dog type (Rear end detection Zphase reference)/torque limit changing dog type (Front end detection, Zphase reference)
-34		Count type (front end detection, Z-phase reference)
-36		Stopper type (stopper position reference)
-38		Dog type (rear end detection, rear end reference)
-39		Count type (front end detection, front end reference)
-40		Dog cradle type
-41		Dog type last Z-phase reference
-42		Dog type front end reference
-43		Dogless Z-phase reference

Setting value	Home position return direction	How to execute home position return
3	Address increasing direction	Method 3
4	Address increasing direction	Method 4
5	Address decreasing direction	Method 5
6	Address decreasing direction	Method 6
7	Address increasing direction	Method 7
8	Address increasing direction	Method 8
11	Address decreasing direction	Method 11
12	Address decreasing direction	Method 12
19	Address increasing direction	Method 19
20	Address increasing direction	Method 20

Setting value	Home position return direction	How to execute home position return
21	Address decreasing direction	Method 21
22	Address decreasing direction	Method 22
23	Address increasing direction	Method 23
24	Address increasing direction	Method 24
27	Address decreasing direction	Method 27
28	Address decreasing direction	Method 28
33	Address decreasing direction	Method 33
34	Address increasing direction	Method 34
35		Method 35
37		Method 37 (Data set type)

PT46 ESTC Synchronous encoder filter time constant		Set a primary delay filter time constant to the synchronous encoder command. Setting this parameter reduces vibration. However, a delay in response to the synchronous encoder will be generated. A setting value when Synchronous control command (C_STS) is turned on will be applied to this parameter. This parameter setting is available with servo amplifiers with software version B0 or later. Setting range: 0 to 5000	0 [ms]		○	

No./ symbol/name	Setting digit	Function	Initial value [unit]	Network		
				ECT	EIP	PNT
PT49 STA Acceleration time constant		Set an acceleration time taken from 0 r/min or 0 mm/s to the rated speed for the command. When a value exceeding 2000 ms is set in other than the profile velocity mode (pv), [AL. F4] will occur and the servo motor cannot be driven. ・Profile mode Set the acceleration time constant in the position mode and the velocity mode. ・Point table method Set the acceleration time constant in the Jog mode (jg). ・Indexer method Set the acceleration time constant in the indexer mode (idx) and Jog mode (jg). 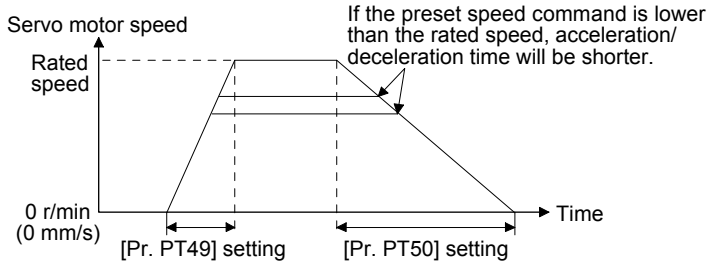 For example, for the servo motor with the rated speed of 3000 r/min, set 3000 (3 s) to increase speed from 0 r/min to 1000 r/min in 1 s. This parameter corresponds to "Profile acceleration (Index: 6083h)". When this parameter is mapped for the PDO communication, the value written with MR Configurator2 is overwritten with the controller. Thus, do not write a value with MR Configurator2. Setting range: 0 to 50000	0 [ms]	○		
		Set an acceleration time taken from 0 r/min or 0 mm/s to the rated speed for the command. When a value exceeding 2000 ms is set in other than the profile velocity mode (pv), [AL. F4] will occur and the servo motor cannot be driven. ・Profile mode Set the acceleration time constant in the position mode and the velocity mode. 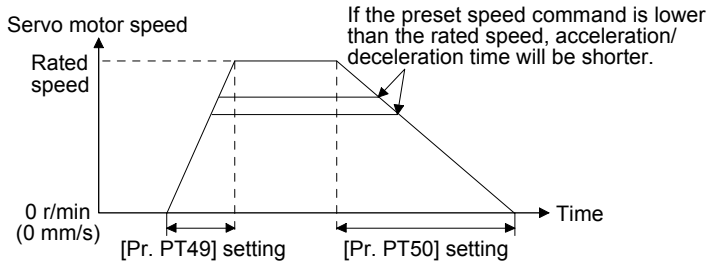 For example, for the servo motor with the rated speed of 3000 r/min, set 3000 (3 s) to increase speed from 0 r/min to 1000 r/min in 1 s. This parameter corresponds to "Profile acceleration (Class ID: 64h, Ins ID: 6083h, Attr ID: 0)". When this parameter is mapped for the I/O communication, the value written with MR Configurator2 is overwritten with the controller. Thus, do not write a value with MR Configurator2. Setting range: 0 to 50000	0 [ms]		○	

No./ symbol/name	Setting digit	Function	Initial value [unit]	Network		
				ECT	EIP	PNT
PT49 STA Acceleration time constant		Set an acceleration time taken from 0 r/min or 0 mm/s to the rated speed for the command. When a value exceeding 2000 ms is set in other than the profile velocity mode (pv), [AL. F4] will occur and the servo motor cannot be driven. ・Profile mode Set the acceleration time constant in the position mode and the velocity mode. ・Point table method Set the acceleration time constant in the Jog mode (jg). ・Indexer method Set the acceleration time constant in the indexer mode (idx) and Jog mode (jg). 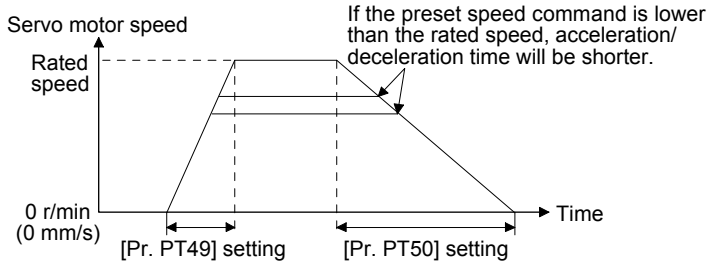 For example, for the servo motor with the rated speed of 3000 r/min, set 3000 (3 s) to increase speed from 0 r/min to 1000 r/min in 1 s. This parameter corresponds to "Profile acceleration (PNU: 24707, Sub: 0)". When this parameter is mapped for the Process Data communication, the value written with MR Configurator2 is overwritten with the controller. Thus, do not write a value with MR Configurator2. Setting range: 0 to 50000	0 [ms]			○

No./ symbol/name	Setting digit	Function	Initial value [unit]	Network		
				ECT	EIP	PNT
PT50 STB Deceleration time constant		Set the deceleration time taken from the rated speed to 0 r/min or 0 mm/s to the command. When a value exceeding 2000 ms is set in other than the profile velocity mode (pv), [AL. F4] will occur and the servo motor cannot be driven. ・Profile mode Set the deceleration time constant in the position mode and the velocity mode. ・Point table method Set the deceleration time constant in the Jog mode (jg). ・Indexer method Set the deceleration time constant in the indexer mode (idx) and Jog mode (jg). This parameter corresponds to "Profile deceleration (Index: 6084h)". When this parameter is mapped for the PDO communication, the value written with MR Configurator2 is overwritten with the controller. Thus, do not write a value with MR Configurator2. Setting range: 0 to 50000	0 [ms]	○		
		Set the deceleration time taken from the rated speed to 0 r/min or 0 mm/s to the command. When a value exceeding 2000 ms is set in other than the profile velocity mode (pv), [AL. F4] will occur and the servo motor cannot be driven. ・Profile mode Set the deceleration time constant in the position mode and the velocity mode. This parameter corresponds to "Profile deceleration (Class ID: 64h, Ins ID: 6084h, Attr ID: 0)". When this parameter is mapped for the I/O communication, the value written with MR Configurator2 is overwritten with the controller. Thus, do not write a value with MR Configurator2. Setting range: 0 to 50000	0 [ms]		○	
		Set the deceleration time taken from the rated speed to 0 r/min or 0 mm/s to the command. When a value exceeding 2000 ms is set in other than the profile velocity mode (pv), [AL. F4] will occur and the servo motor cannot be driven. ・Profile mode Set the deceleration time constant in the position mode and the velocity mode. ・Point table method Set the deceleration time constant in the Jog mode (jg). ・Indexer method Set the deceleration time constant in the indexer mode (idx) and Jog mode (jg). This parameter corresponds to "Profile deceleration (PNU: 24708, Sub: 0)". When this parameter is mapped for the Process Data communication, the value written with MR Configurator2 is overwritten with the controller. Thus, do not write a value with MR Configurator2. Setting range: 0 to 50000	0 [ms]			○

No./ symbol/name	Setting digit	Function	Initial value [unit]	Network		
				ECT	EIP	PNT
PT51 STC S-pattern acceleration/ deceleration time constant		This parameter is used to smooth the start/stop of the servo motor or linear servo motor. Set the time of the arc part for S-pattern acceleration/deceleration. Setting "0" will make it linear acceleration/deceleration. 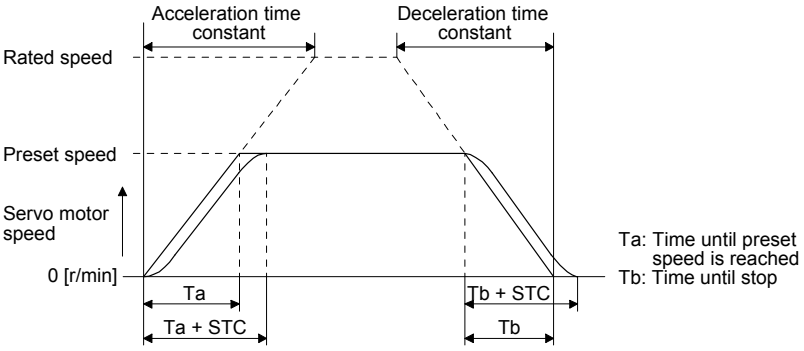 Long setting of STA (acceleration time constant) or STB (deceleration time constant) may produce deviation in the set time of the arc part for the S-pattern acceleration/deceleration time constant. The setting will be disabled at home position return. To enable the parameter values, cycle the power after setting. ・Profile mode When a value exceeding 1000 ms is set in other than the profile velocity mode (pv), the parameter value will be clamped to 1000 ms. Specify STA (acceleration time constant) and STB (deceleration time constant) with "Profile acceleration (Index: 6083h)" and "Profile deceleration (Index: 6084h)". This function will be enabled in the profile position mode (pp) and profile velocity mode (pv). ・Point table method When a value exceeding 1000 ms is set, the parameter value will be clamped to 1000 ms. Specify STA (acceleration time constant) and STB (deceleration time constant) with the point table. The upper limit value of the actual arc part time is limited by $\frac{2000000}{STA}$ for acceleration or by $\frac{2000000}{STB}$ for deceleration. (Example) When STA = 20000, STB = 5000 and STC = 200, the actual arc part times are as follows. At acceleration: 100 ms $\frac{2000000}{20000}$ = 100 [ms] < 200 [ms] Therefore, it will be limited to 100 [ms]. At deceleration: 200 ms $\frac{2000000}{5000}$ = 400 [ms] > 200 [ms] Therefore, it will be 200 [ms] as you set. Setting range: 0 to 5000	0 [ms]	○		

No./ symbol/name	Setting digit	Function	Initial value [unit]	Network		
				ECT	EIP	PNT
PT51 STC S-pattern acceleration/ deceleration time constant		This parameter is used to smooth the start/stop of the servo motor or linear servo motor. Set the time of the arc part for S-pattern acceleration/deceleration. Setting "0" will make it linear acceleration/deceleration. 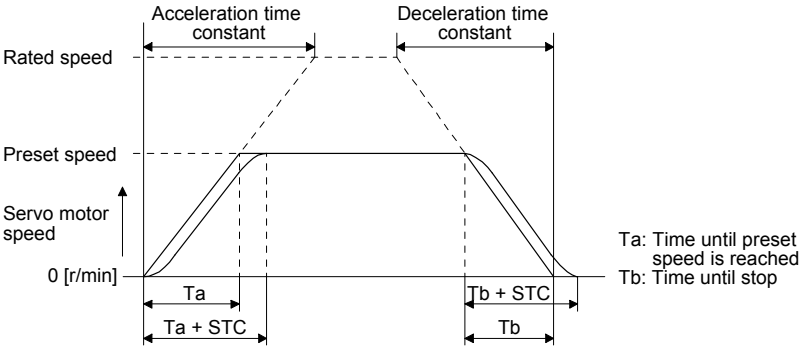 Long setting of STA (acceleration time constant) or STB (deceleration time constant) may produce deviation in the set time of the arc part for the S-pattern acceleration/deceleration time constant. The setting will be disabled at home position return. To enable the parameter values, cycle the power after setting. ・Profile mode When a value exceeding 1000 ms is set in other than the profile velocity mode (pv), the parameter value will be clamped to 1000 ms. Specify STA (acceleration time constant) and STB (deceleration time constant) with "Profile acceleration (Class ID: 64h, Ins ID: 6083h, Attr ID: 0)" and "Profile deceleration (Class ID: 64h, Ins ID: 6084h, Attr ID: 0). This function will be enabled in the profile position mode (pp) and profile velocity mode (pv). The upper limit value of the actual arc part time is limited by $\frac{2000000}{STA}$ for acceleration or by $\frac{2000000}{STB}$ for deceleration. (Example) When STA = 20000, STB = 5000 and STC = 200, the actual arc part times are as follows. At acceleration: 100 ms $\frac{2000000}{20000} = 100\ [ms] < 200\ [ms]$ Therefore, it will be limited to 100 [ms]. At deceleration: 200 ms $\frac{2000000}{5000} = 400\ [ms] > 200\ [ms]$ Therefore, it will be 200 [ms] as you set. Setting range: 0 to 5000	0 [ms]		○	

No./ symbol/name	Setting digit	Function	Initial value [unit]	Network		
				ECT	EIP	PNT
PT51 STC S-pattern acceleration/ deceleration time constant		This parameter is used to smooth the start/stop of the servo motor or linear servo motor. Set the time of the arc part for S-pattern acceleration/deceleration. Setting "0" will make it linear acceleration/deceleration. 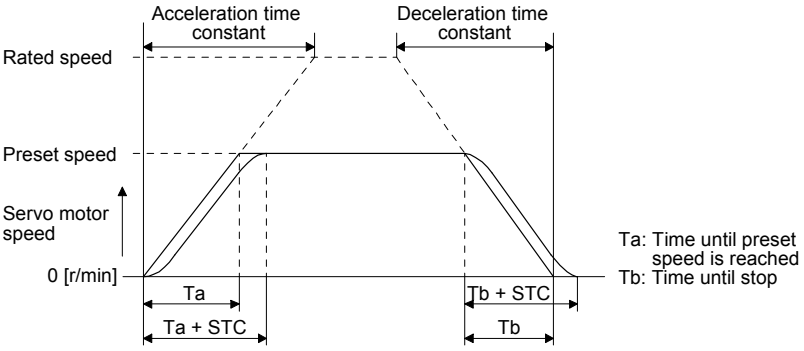 Long setting of STA (acceleration time constant) or STB (deceleration time constant) may produce deviation in the set time of the arc part for the S-pattern acceleration/deceleration time constant. The setting will be disabled at home position return. To enable the parameter values, cycle the power after setting. ・Profile mode When a value exceeding 1000 ms is set in other than the profile velocity mode (pv), the parameter value will be clamped to 1000 ms. Specify STA (acceleration time constant) and STB (deceleration time constant) with "Profile acceleration (PNU: 24707, Sub: 0)" and "Profile deceleration (PNU: 24708, Sub: 0)". This function will be enabled in the profile position mode (pp) and profile velocity mode (pv). ・Point table method When a value exceeding 1000 ms is set, the parameter value will be clamped to 1000 ms. Specify STA (acceleration time constant) and STB (deceleration time constant) with the point table. The upper limit value of the actual arc part time is limited by $\frac{2000000}{STA}$ for acceleration or by $\frac{2000000}{STB}$ for deceleration. (Example) When STA = 20000, STB = 5000 and STC = 200, the actual arc part times are as follows. At acceleration: 100 ms $\frac{2000000}{20000}$ = 100 [ms] < 200 [ms] Therefore, it will be limited to 100 [ms]. At deceleration: 200 ms $\frac{2000000}{5000}$ = 400 [ms] > 200 [ms] Therefore, it will be 200 [ms] as you set. Setting range: 0 to 5000	0 [ms]			○

No./ symbol/name	Setting digit	Function	Initial value [unit]	Network		
				ECT	EIP	PNT
PT53 TQS Torque slope		Set the rate of change of the torque command per second. However, setting "0.0" will disable the torque slope. This function will be enabled in the profile torque mode (tq). This parameter corresponds to "Torque slope (Index: 6087h)". When this parameter is mapped for the PDO communication, the value written with MR Configurator2 is overwritten with the controller. Thus, do not write a value with MR Configurator2. Setting range: 0.0 to 1000000.0	0.0 [%/s]	○		
		Set the rate of change of the torque command per second. However, setting "0.0" will disable the torque slope. This function will be enabled in the profile torque mode (tq). This parameter corresponds to "Torque slope (Class ID: 64h, Ins ID: 6087h, Attr ID: 0)". When this parameter is mapped for the I/O communication, the value written with MR Configurator2 is overwritten with the controller. Thus, do not write a value with MR Configurator2. Setting range: 0.0 to 1000000.0	0.0 [%/s]		○	
		Set the rate of change of the torque command per second. However, setting "0.0" will disable the torque slope. This function will be enabled in the profile torque mode (tq). This parameter corresponds to "Torque slope (PNU: 24711, Sub: 0)". When this parameter is mapped for the Process Data communication, the value written with MR Configurator2 is overwritten with the controller. Thus, do not write a value with MR Configurator2. Setting range: 0.0 to 1000000.0	0.0 [%/s]			○
PT55 *TOP8 Function selection T-8	_ _ _ x	Home position return - Deceleration time constant selection Set a value used for the acceleration time constant and deceleration time constant at home position return. 0: Using [Pr. PT56] for both acceleration time constant and deceleration time constant 1: Using [Pr. PT56] for acceleration time constant, and [Pr. PT57] for deceleration time constant	0h	○	○	○
	_ _ x _	For manufacturer setting	0h			
	_ x _ _		0h			
	x _ _ _		0h			

No./ symbol/name	Setting digit	Function	Initial value [unit]	Network		
				ECT	EIP	PNT
PT56 HMA Home position return acceleration time constant		Set the acceleration time constant for the home position return. Set the acceleration time taken from 0 r/min or 0 mm/s to the rated speed. When "Use [Pr. PT56] as both acceleration time constant and deceleration time constant (0 _ _ _)" is selected in [Pr. PT55] Home position return - Deceleration time constant selection, the value set in this parameter is used as a deceleration time constant at home position return. This parameter corresponds to "Homing acceleration (Index: 609Ah)". When this parameter is mapped for the PDO communication, the value written with MR Configurator2 is overwritten with the controller. Thus, do not write a value with MR Configurator2. Setting range: 0 to 20000	0 [ms]	○		
		Set the acceleration time constant for the home position return. Set the acceleration time taken from 0 r/min or 0 mm/s to the rated speed. When "Use [Pr. PT56] as both acceleration time constant and deceleration time constant (0 _ _ _)" is selected in [Pr. PT55] Home position return - Deceleration time constant selection, the value set in this parameter is used as a deceleration time constant at home position return. This parameter corresponds to "Homing acceleration (Class ID: 64h, Ins ID: 609Ah, Attr ID: 0)". When this parameter is mapped for the I/O communication, the value written with MR Configurator2 is overwritten with the controller. Thus, do not write a value with MR Configurator2. Setting range: 0 to 20000	0 [ms]		○	
		Set the acceleration time constant for the home position return. Set the acceleration time taken from 0 r/min or 0 mm/s to the rated speed. When "Use [Pr. PT56] as both acceleration time constant and deceleration time constant (0 _ _ _)" is selected in [Pr. PT55] Home position return - Deceleration time constant selection, the value set in this parameter is used as a deceleration time constant at home position return. This parameter corresponds to "Homing acceleration (PNU: 24730, Sub: 0)". When this parameter is mapped for the Process Data communication, the value written with MR Configurator2 is overwritten with the controller. Thus, do not write a value with MR Configurator2. Setting range: 0 to 20000	0 [ms]			○
PT57 HMB Home position return deceleration time constant		Set the deceleration time constant at the home position return. Set a deceleration time from the rated speed to 0 r/min or 0 mm/s. The parameter will be enabled when you select "Using [Pr. PT56] for acceleration time constant, and [Pr. PT57] for deceleration time constant (1 _ _ _)" of "Home position return - Deceleration time constant selection" in [Pr. PT55]. Setting range: 0 to 20000	0 [ms]	○	○	○
PT65 PVC Profile speed command		Set the speed of the profile speed command. The fractional portion of the parameter will be rounded down. The setting value will be clamped at the instantaneous permissible speed. This function will be enabled in the profile position mode (pp), Jog mode (jg) and indexer mode (idx). This parameter corresponds to "Profile velocity (Index: 6081h)". When this parameter is mapped for the PDO communication, the value written with MR Configurator2 is overwritten with the controller. Thus, do not write a value with MR Configurator2. Setting range: 0.00 to 167772.15	100.00 [r/min]/ [mm/s]	○		

No./ symbol/name	Setting digit	Function	Initial value [unit]	Network		
				ECT	EIP	PNT
PT65 PVC Profile speed command		Set the speed of the profile speed command. The fractional portion of the parameter will be rounded down. The setting value will be clamped at the instantaneous permissible speed. This function will be enabled in the profile position mode (pp). This parameter corresponds to "Profile velocity (Class ID: 64h, Ins ID: 6081h, Attr ID: 0)". When this parameter is mapped for the I/O communication, the value written with MR Configurator2 is overwritten with the controller. Thus, do not write a value with MR Configurator2. Setting range: 0.00 to 167772.15	100.00 [r/min]/ [mm/s]		○	
		Set the speed of the profile speed command. The fractional portion of the parameter will be rounded down. The setting value will be clamped at the instantaneous permissible speed. This function will be enabled in the profile position mode (pp), Jog mode (jg) and indexer mode (idx). This parameter corresponds to "Profile velocity (PNU: 24705, Sub: 0)". When this parameter is mapped for the Process Data communication, the value written with MR Configurator2 is overwritten with the controller. Thus, do not write a value with MR Configurator2. Setting range: 0.00 to 167772.15	100.00 [r/min]/ [mm/s]			○
PT66 MPVC Maximum profile speed		Set the maximum profile speed. This function will be enabled in the profile position mode (pp), profile velocity mode (pv), Jog mode (jg) and indexer mode (idx). The fractional portion of this parameter will be rounded down in the profile position mode (pp), Jog mode (jg) and indexer mode (idx). This parameter corresponds to "Max profile velocity (Index: 607Fh)". When this parameter is mapped for the PDO communication, the value written with MR Configurator2 is overwritten with the controller. Thus, do not write a value with MR Configurator2. Setting range: 0.00 to 20000.00	20000.00 [r/min]/ [mm/s]	○		
		Set the maximum profile speed. This function will be enabled in the profile position mode (pp) and profile velocity mode (pv). The fractional portion of this parameter will be rounded down in the profile position mode (pp). This parameter corresponds to "Max profile velocity (Class ID: 64h, Ins ID: 607Fh, Attr ID: 0)". When this parameter is mapped for the I/O communication, the value written with MR Configurator2 is overwritten with the controller. Thus, do not write a value with MR Configurator2. Setting range: 0.00 to 20000.00	20000.00 [r/min]/ [mm/s]		○	
		Set the maximum profile speed. This function will be enabled in the profile position mode (pp), profile velocity mode (pv), Jog mode (jg) and indexer mode (idx). The fractional portion of this parameter will be rounded down in the profile position mode (pp), Jog mode (jg) and indexer mode (idx). This parameter corresponds to "Max profile velocity (PNU: 24703, Sub: 0)". When this parameter is mapped for the Process Data communication, the value written with MR Configurator2 is overwritten with the controller. Thus, do not write a value with MR Configurator2. Setting range: 0.00 to 20000.00	20000.00 [r/min]/ [mm/s]			○

No./ symbol/name	Setting digit	Function	Initial value [unit]	Network		
				ECT	EIP	PNT
PT67 VLMT Speed limit		Set the maximum speed in the torque control. The setting value will be clamped at the instantaneous permissible speed. This function will be enabled in the profile torque mode (tq) and cyclic synchronous torque mode (cst). This parameter corresponds to "Velocity limit value (Index: 2D20h)". When this parameter is mapped for the PDO communication, the value written with MR Configurator2 is overwritten with the controller. Thus, do not write a value with MR Configurator2. Setting range: 0.00 to 167772.15	500.00 [r/min]/ [mm/s]	○		
		Set the maximum speed in the torque control. The setting value will be clamped at the instantaneous permissible speed. This function will be enabled in the profile torque mode (tq). This parameter corresponds to "Velocity limit value (Class ID: 64h, Ins ID: 2D20h, Attr ID: 0)". When this parameter is mapped for the I/O communication, the value written with MR Configurator2 is overwritten with the controller. Thus, do not write a value with MR Configurator2. Setting range: 0.00 to 167772.15	500.00 [r/min]/ [mm/s]		○	
		Set the maximum speed in the torque control. The setting value will be clamped at the instantaneous permissible speed. This function will be enabled in the profile torque mode (tq). This parameter corresponds to "Velocity limit value (PNU: 11522, Sub: 0)". When this parameter is mapped for the Process Data communication, the value written with MR Configurator2 is overwritten with the controller. Thus, do not write a value with MR Configurator2. Setting range: 0.00 to 167772.15	500.00 [r/min]/ [mm/s]			○
PT69 ZSTH Home position shift distance (extension parameter)		This parameter is the extension parameter of [Pr. PT07]. When [Pr. PT69] is used, the home position shift distance is calculated as follows. Home position shift distance = [Pr. PT07] + ([Pr. PT69] × 65536) The unit of this parameter will be as follows depending on the setting of [Pr. PA01]. ・In the cyclic synchronous mode The unit is [pulse]. ・Profile mode and point table method The unit can be changed to [μm], 10^{-4} [inch], 10^{-3} [degree] or [pulse] with the setting of [Pr. PT01]. ・Indexer method It will be command unit [pulse]. (A load-side rotation expressed by the number of servo motor resolution pulses) Refer to the Function column of [Pr. PA10] for the command unit [pulse]. Additionally, when a value equal to or more than "1001" is set, the value will be clamped to "1000". This parameter setting is available with servo amplifiers with software version B0 or later. Setting range: 0 to 32767	0 Refer to Function column for unit.	○	○	○

No./ symbol/name	Setting digit	Function	Initial value [unit]	Network		
				ECT	EIP	PNT
PT71 DCTH Travel distance after proximity dog (extension parameter)		This parameter is the extension parameter of [Pr. PT09]. When [Pr. PT71] is used, the travel distance after proximity dog is calculated as follows. Travel distance after proximity dog = [Pr. PT09] + ([Pr. PT71] × 65536) This function will be enabled in the profile mode and cyclic synchronous mode. The unit can be changed to 10^{STM} [μm], $10^{(STM-4)}$ [inch], 10^{-3} [degree] or [pulse] according to the setting of [Pr. PT01]. This parameter setting is available with servo amplifiers with software version B0 or later. Setting range: 0 to 32767	0 Refer to Function column for unit.	○	○	○
PT72 ECMXL Synchronous encoder electronic gear - Numerator (lower four digits)		Set an electronic gear numerator for converting a synchronous encoder command into a command unit. Upper and lower are a set. Set the electronic gear in hexadecimal. Setting value of this parameter: ＿＿＿＿ ＿＿＿＿ Upper four digits — [Pr. PT73] Lower four digits — [Pr. PT72] Set a value within the following range. When a value outside the range is set, synchronous control error will occur and synchronous control will not start even though Synchronous control command (Control DI7 bit 12) is input. Setting "0" will apply "1". $\frac{1}{16000} < \frac{\text{Synchronous encoder electronic gear - Numerator}}{\text{Synchronous encoder electronic gear - Denominator}} < 6000$ To enable the parameter value, cycle the power or turn on Analysis command (Control DI 7 bit 14). This parameter corresponds to "External encoder gear numerator (Class ID: 64h, Ins ID: 2DF0h, Attr ID: 1)". When this parameter is mapped for the I/O communication, the value written with MR Configurator2 is overwritten with the controller. Thus, do not write a value with MR Configurator2. Setting range: 0000h 0000h to FFFFh FFFFh	0000h		○	
PT73 ECMXH Synchronous encoder electronic gear - Numerator (upper four digits)		Set an electronic gear numerator for converting a synchronous encoder command into a command unit. Upper and lower are a set. Refer to [Pr. PT72] for details.	0000h		○	

No./ symbol/name	Setting digit	Function	Initial value [unit]	Network		
				ECT	EIP	PNT
PT74 ECDVL Synchronous encoder electronic gear - Denominator (lower four digits)		Set an electronic gear denominator for converting a synchronous encoder command into a command unit. Upper and lower are a set. Set the electronic gear in hexadecimal. Setting value of this parameter: ___ ___ ___ ___ ___ ___ ___ ___ Upper four digits: [Pr. PT75] Lower four digits: [Pr. PT74] Set a value within the following range. When a value outside the range is set, synchronous control error will occur and synchronous control will not start even though Synchronous control command (Control DI7 bit 12) is input. Setting "0" will apply "1". $\frac{1}{16000} < \frac{\text{Synchronous encoder electronic gear - Numerator}}{\text{Synchronous encoder electronic gear - Denominator}} < 6000$ To enable the parameter value, cycle the power or turn on Analysis command (Control DI 7 bit 14). This parameter corresponds to "External encoder gear denominator (Class ID: 64h, Ins ID: 2DF0h, Attr ID: 2)". When this parameter is mapped for the I/O communication, the value written with MR Configurator2 is overwritten with the controller. Thus, do not write a value with MR Configurator2. Setting range: 0000h 0000h to FFFFh FFFFh	0000h		○	
PT75 ECDVH Synchronous encoder electronic gear - Denominator (upper four digits)		Set an electronic gear denominator for converting a synchronous encoder command into a command unit. Upper and lower are a set. Refer to [Pr. PT74] for details.	0000h		○	

5.2.9 Network setting parameters ([Pr. PN_ _])

No./ symbol/name	Setting digit	Function	Initial value [unit]	Network		
				ECT	EIP	PNT
PN01 **NADR Node address setting		Set the node address of the network. When using the parameter, set the axis selection rotary switch to "00h". The parameter will be enabled for the EtherCAT. Setting range: 0000h to FFFFh	0000h	○		

5.3 Software limit

The limit stop with the software limit ([Pr. PT15] to [Pr. PT18]) is the same as the motion of the stroke end. Exceeding a setting range will stop and servo-lock the shaft. This will be enabled at power-on and will be disabled in the velocity mode, torque mode, and homing mode (hm). Setting a same value to "Software limit +" and "Software limit -" will disable this function. Setting a larger value to "Software limit -" than "Software limit +" will disable this function.

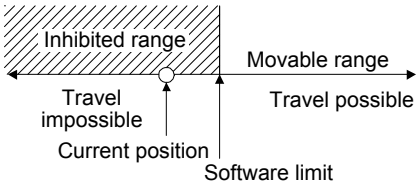

5.4 How to set the electronic gear

5.4.1 Electronic gear setting in the cyclic synchronous mode, profile mode and point table method

> **POINT**
>
> ●The position data unit that can be set vary depending on the control mode. Refer to [Pr. PT01 Position data unit] for details.

(1) Setting [mm], [inch], or [pulse] with "Position data unit" of [Pr. PT01]
Adjust [Pr. PA06] and [Pr. PA07] to match the servo amplifier setting with the travel distance of the machine.

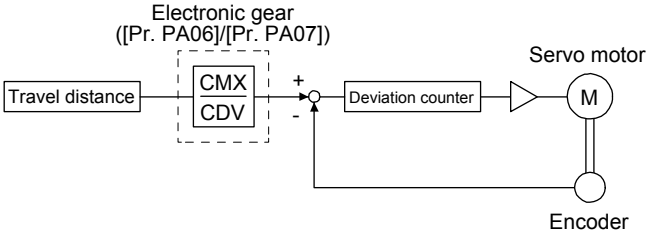

P_t: Servo motor encoder resolution: 4194304 [pulse/rev]
ΔS: Travel distance per servo motor revolution [mm/rev]/[inch/rev]/[pulse/rev]
CMX/CDV = P_t/ΔS

The following setting example explains how to calculate the electronic gear.

> **POINT**
>
> ●To calculate the electronic gear, the following specification symbols are required.
> Pb: Ball screw lead [mm]
> 1/n: Reduction ratio
> P_t: Servo motor encoder resolution [pulse/rev]
> ΔS: Travel distance per servo motor revolution [mm/rev]

(a) Setting example of a ball screw

Machine specifications

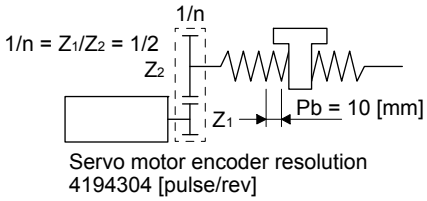

Ball screw lead Pb = 10 [mm]
Reduction ratio: 1/n = Z_1/Z_2 = 1/2
Z_1: Number of gear teeth on servo motor side
Z_2: Number of gear teeth on load gear

Servo motor encoder resolution P_t = 4194304 [pulse/rev]

$$\frac{CMX}{CDV} = \frac{P_t}{\Delta S} = \frac{P_t}{1/n \cdot Pb \cdot \alpha\ (Note)} = \frac{4194304}{1/2 \cdot 10 \cdot 1000} = \frac{4194304}{5000} = \frac{524288}{625}$$

Note. Because the command unit is "mm", α is 1000. When the unit is "inch", α is 10000. When the unit is "pulse", α is 1.

Therefore, set CMX = 524288 and CDV = 625.

(b) Setting example of a conveyor

Machine specifications

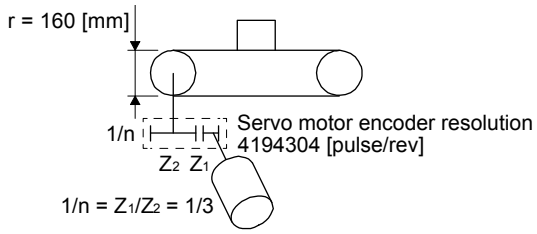

Pulley diameter: r = 160 [mm]
Reduction ratio: $1/n = Z_1/Z_2 = 1/3$
Z_1: Number of gear teeth on servo motor side
Z_2: Number of gear teeth on load gear

Servo motor encoder resolution P_t = 4194304 [pulse/rev]

$$\frac{CMX}{CDV} = \frac{P_t}{\Delta S} = \frac{P_t}{1/n \cdot r \cdot \pi \cdot \alpha \text{ (Note)}} = \frac{4194304}{1/3 \cdot 160 \cdot \pi \cdot 1000} = \frac{4194304}{167551.61} \approx \frac{524288}{20944}$$

Note. Because the command unit is "mm", α is 1000. When the unit is "inch", α is 10000. When the unit is "pulse", α is 1.

Reduce CMX and CDV to within the setting range or lower and round off each value to the closest whole number.
Therefore, set CMX = 524288 and CDV = 20944.

(2) Setting [degree] with "Position data unit" of [Pr. PT01].
Set the number of gear teeth on machine side to [Pr. PA06] and the number of gear teeth on servo motor side to [Pr. PA07].

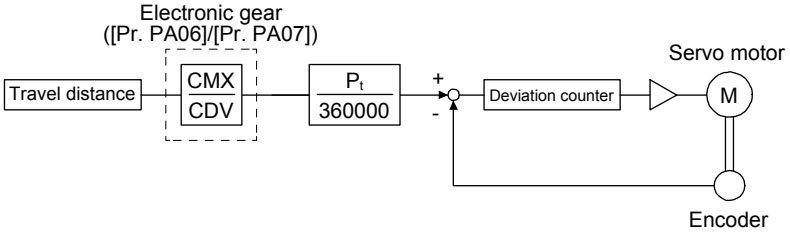

P_t: Servo motor encoder resolution: 4194304 [pulse/rev]

Set the electronic gear within the following range. Setting out of the range will trigger [AL. 37 Parameter error].

(a) Set values to make numerator and denominator 16384 or lower if the electronic gear (CMX/CDV) is reduced to its lowest terms.

(b) Set values to make numerator and denominator 16777216 or lower if $(CMX \times P_t)/(CDV \times 360000)$ is reduced to its lowest terms.

The following shows a setting example of the electronic gear.
Number of gear teeth on machine side: 25, number of gear teeth on servo motor side: 11
Set [Pr. PA06] = 25 and [Pr. PA07] = 11.

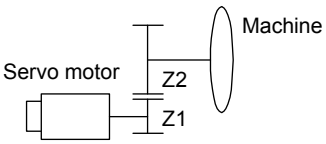

P_t (Servo motor resolution): 4194304 pulses/rev
Z1: Number of gear teeth on servo motor side
Z2: Number of gear teeth on machine side
Z1: Z2 = 11:25

5.4.2 Electronic gear setting in the indexer method

Adjust [Pr. PA06] and [Pr. PA07] to align the rotation amount "m" of the servo motor shaft necessary to rotate the load side for "n" times. The following shows a setting example of the electronic gear.

(1) Number of pulley teeth on machine side: 50, number of pulley teeth on servo motor side: 20
Set [Pr. PA06] = 50 and [Pr. PA07] = 20.

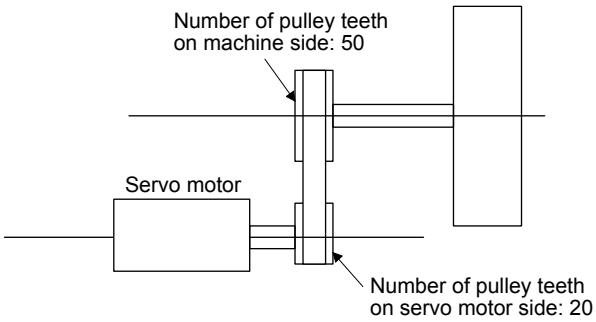

(2) Number of pulley teeth on machine side: 50, number of pulley teeth on servo motor side: 20, with geared servo motor of 1/9
Set [Pr. PA06] = 450 and [Pr. PA07] = 20.

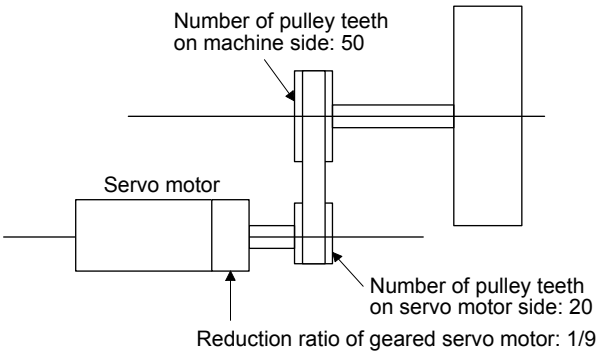

$$\frac{50}{20} \times \frac{9}{1} = \frac{450}{20}$$

6. NORMAL GAIN ADJUSTMENT

POINT

- In the torque mode, you do not need to make gain adjustment.
- Before making gain adjustment, check that your machine is not being operated at maximum torque of the servo motor. If operated over maximum torque, the machine may vibrate and may operate unexpectedly. In addition, make gain adjustment with a safety margin considering characteristic differences of each machine. It is recommended that generated torque during operation is under 90% of the maximum torque of the servo motor.
- When you use a linear servo motor, replace the following words in the left to the words in the right.
  Load to motor inertia ratio → Load to motor mass ratio
  Torque → Thrust
- For the vibration suppression control tuning mode, the setting range of [Pr. PB07] is limited. Refer to section 7.1.5 (4) for details.

6.1 Different adjustment methods

6.1.1 Adjustment on a single servo amplifier

The following table shows the gain adjustment modes that can be set on a single servo amplifier. For gain adjustment, first execute "Auto tuning mode 1". If you are not satisfied with the result of the adjustment, execute "Auto tuning mode 2" and "Manual mode" in this order.

(1) Gain adjustment mode explanation

Gain adjustment mode	[Pr. PA08] setting	Estimation of load to motor inertia ratio	Automatically set parameters	Manually set parameters
Auto tuning mode 1 (initial value)	_ _ _ 1	Always estimated	GD2 ([Pr. PB06]) PG1 ([Pr. PB07]) PG2 ([Pr. PB08]) VG2 ([Pr. PB09]) VIC ([Pr. PB10])	RSP ([Pr. PA09])
Auto tuning mode 2	_ _ _ 2	Fixed to [Pr. PB06] value	PG1 ([Pr. PB07]) PG2 ([Pr. PB08]) VG2 ([Pr. PB09]) VIC ([Pr. PB10])	GD2 ([Pr. PB06]) RSP ([Pr. PA09])
Manual mode	_ _ _ 3			GD2 ([Pr. PB06]) PG1 ([Pr. PB07]) PG2 ([Pr. PB08]) VG2 ([Pr. PB09]) VIC ([Pr. PB10])
2 gain adjustment mode 1 (interpolation mode)	_ _ _ 0	Always estimated	GD2 ([Pr. PB06]) PG2 ([Pr. PB08]) VG2 ([Pr. PB09]) VIC ([Pr. PB10])	PG1 ([Pr. PB07]) RSP ([Pr. PA09])
2 gain adjustment mode 2	_ _ _ 4	Fixed to [Pr. PB06] value	PG2 ([Pr. PB08]) VG2 ([Pr. PB09]) VIC ([Pr. PB10])	GD2 ([Pr. PB06]) PG1 ([Pr. PB07]) RSP ([Pr. PA09])

(2) Adjustment sequence and mode usage

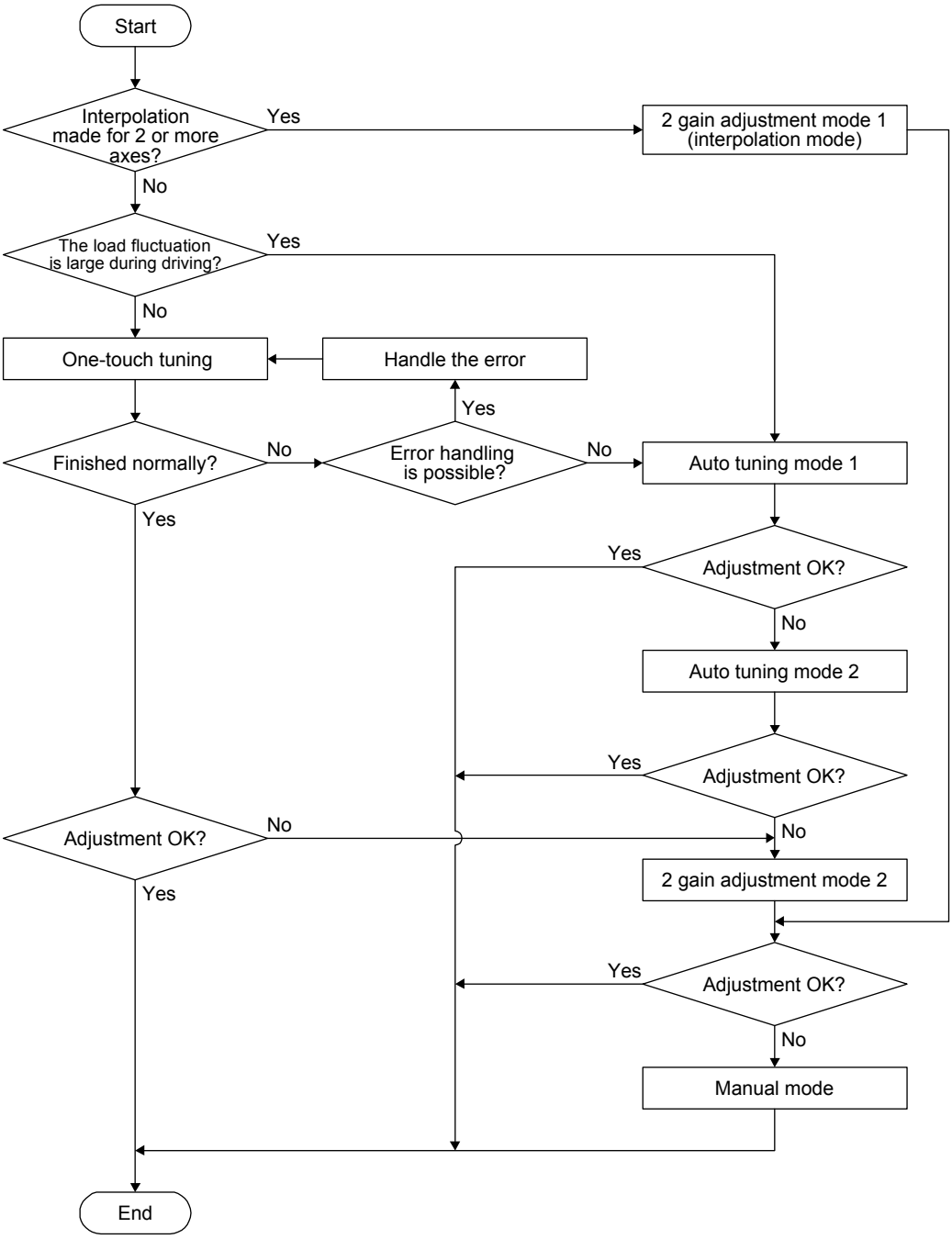

6.1.2 Adjustment using MR Configurator2

This section explains the functions and adjustment using the servo amplifier with MR Configurator2.

Function	Description	Adjustment
Machine analyzer	With the machine and servo motor coupled, the characteristic of the mechanical system can be measured by giving a random vibration command from a personal computer to the servo and measuring the machine response.	You can grasp the machine resonance frequency and determine the notch frequency of the machine resonance suppression filter.

6.2 One-touch tuning

POINT

- After the one-touch tuning is completed, "Gain adjustment mode selection" in [Pr. PA08] will be set to "2 gain adjustment mode 2 (_ _ _ 4)". To estimate [Pr. PB06 Load to motor inertia ratio/load to motor mass ratio], set "Gain adjustment mode selection" in [Pr. PA08] to "Auto tuning mode 1 (_ _ _ 1)".
- When executing the one-touch tuning, check the [Pr. PA21 One-touch tuning function selection] is "_ _ _ 1" (initial value).
- For one-touch tuning via a network, refer to respective communication method manuals of "MR-J4-_TM_ Servo Amplifier Instruction Manual".

Connect MR Configurator2 and open the one-touch tuning window, and you can use the function. The following parameters are set automatically with one-touch tuning.

Table 6.1 List of parameters automatically set with one-touch tuning

Parameter	Symbol	Name
PA08	ATU	Auto tuning mode
PA09	RSP	Auto tuning response
PB01	FILT	Adaptive tuning mode (adaptive filter II)
PB02	VRFT	Vibration suppression control tuning mode (advanced vibration suppression control II)
PB06	GD2	Load to motor inertia ratio/load to motor mass ratio
PB07	PG1	Model loop gain
PB08	PG2	Position loop gain
PB09	VG2	Speed loop gain
PB10	VIC	Speed integral compensation
PB12	OVA	Overshoot amount compensation
PB13	NH1	Machine resonance suppression filter 1
PB14	NHQ1	Notch shape selection 1
PB15	NH2	Machine resonance suppression filter 2

Parameter	Symbol	Name
PB16	NHQ2	Notch shape selection 2
PB18	LPF	Low-pass filter setting
PB19	VRF11	Vibration suppression control 1 - Vibration frequency
PB20	VRF12	Vibration suppression control 1 - Resonance frequency
PB21	VRF13	Vibration suppression control 1 - Vibration frequency damping
PB22	VRF14	Vibration suppression control 1 - Resonance frequency damping
PB23	VFBF	Low-pass filter selection
PB47	NHQ3	Notch shape selection 3
PB48	NH4	Machine resonance suppression filter 4
PB49	NHQ4	Notch shape selection 4
PB51	NHQ5	Notch shape selection 5
PE41	EOP3	Function selection E-3

6.2.1 One-touch tuning flowchart

Make one-touch tuning as follows.

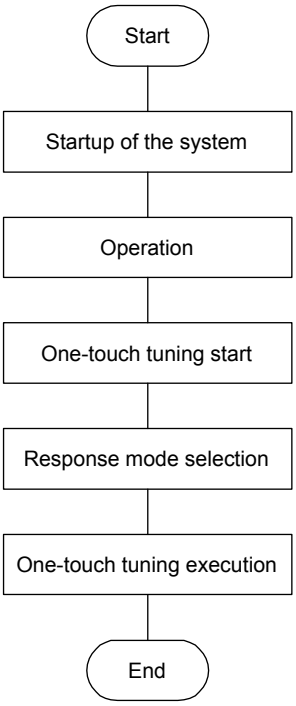

Startup a system referring to chapter 4.

Rotate the servo motor by an external controller, etc. (The one-touch tuning cannot be performed if the servo motor is not operating.)

Start one-touch tuning of MR Configurator2.

Select a response mode (high mode, basic mode, and low mode) in the one-touch tuning window of MR Configurator2.

Click "start" to start one-touch tuning. Click it during servo motor driving.
When one-touch tuning is completed normally, the parameters described in table 6.1 will be set automatically.

6.2.2 Display transition and operation procedure of one-touch tuning

(1) Response mode selection

Select a response mode from 3 modes in the one-touch tuning window of MR Configurator2.

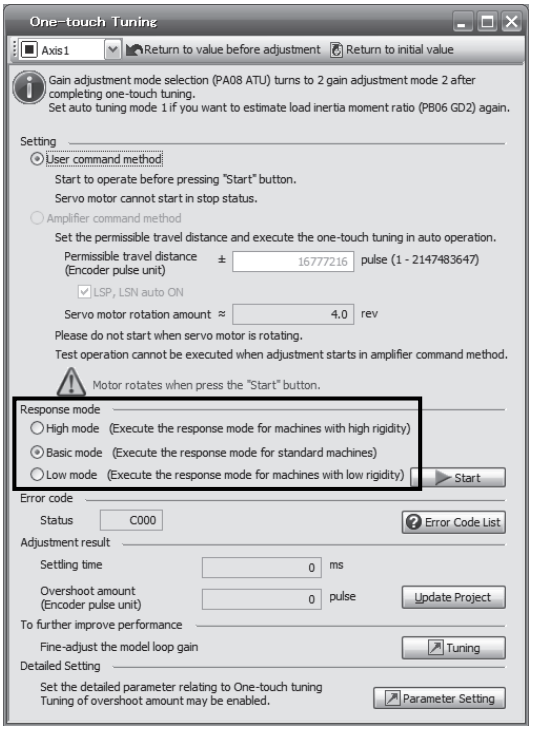

Response mode	Explanation
High mode	This mode is for high-rigid system. (Note)
Basic mode	This mode is for standard system.
Low mode	This mode is for low-rigid system.

Note. If the communication cycle of the controller is 2 ms or more, the gain may be adjusted higher. In this case, readjust the gain in the basic mode or the low mode.

Refer to the following table for selecting a response mode.

Response mode			Response	Machine characteristic
Low mode	Basic mode	High mode		Guideline of corresponding machine
↕	↕	↕	Low response ↕ High response	Arm robot General machine tool Conveyor Precision working machine Inserter Mounter Bonder

POINT

●For equipment in which overshoot during one-touch tuning is in the permissible level of the in-position range, changing the value of [Pr. PA25 One-touch tuning - Overshoot permissible level] will shorten the settling time and improve the response.

(2) One-touch tuning execution

After the response mode is selected in (1) in this section, clicking "Start" during servo motor driving will start one-touch tuning. If "start" is clicked while the servo motor stops, "C 0 0 2" or "C 0 0 4" will be displayed at status in error code. (Refer to (4) in this section for error codes.)

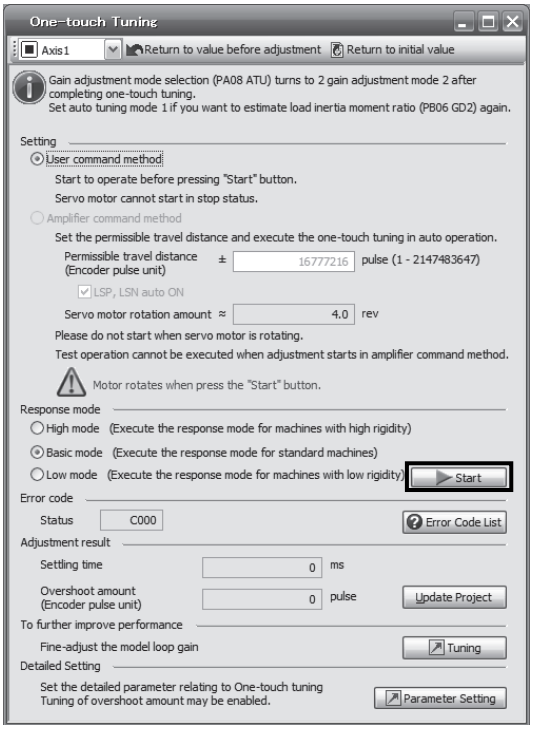

During processing of one-touch tuning, the status will be displayed in the progress window as follows. One-touch tuning will be finished at 100%.

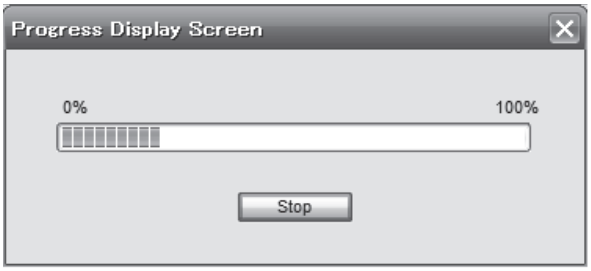

Completing the one-touch tuning starts writing tuning parameters to the servo amplifier. "0 0 0 0" is displayed at status in error code. In addition, settling time and overshoot amount will be displayed in "Adjustment result" after adjustment.

(3) One-touch tuning execution

During one-touch tuning, pushing the stop button stops one-touch tuning.

If the one-touch tuning is stopped, "C 0 0 0" will be displayed at status in error code.

(4) If an error occur

If a tuning error occurs during tuning, one-touch tuning will be forcibly terminated. With that, the following error code will be displayed in status. Check the cause of tuning error.

Error code	Name	Description	Action
C000	Tuning canceled	The stop button was pushed during one-touch tuning.	
C001	Overshoot exceeded	The overshoot amount is larger than the value set in [Pr. PA10 In-position range].	Increase the in-position range.
C002	Servo-off during tuning	The one-touch tuning was attempted during servo-off.	Perform the one-touch tuning after servo-on.
C003	Control mode error	The one-touch tuning was attempted while the torque mode was selected in the control modes.	Select the position mode or velocity mode for the control mode from the controller, and then make one-touch tuning.
C004	Time-out	1. 1 cycle time during the operation has been over 30 s.	Set the 1 cycle time during the operation to 30 s or less.
		2. The command speed is low.	Set the servo motor speed to100 r/min or higher.
		3. The operation interval of the continuous operation is short.	Maintain the operation interval during motor driving about 200 ms.
C005	Load to motor inertia ratio misestimated	1. The estimation of the load to motor inertia ratio at one-touch tuning was a failure.	Drive the motor with meeting conditions as follows. ・The acceleration/deceleration time constant to reach 2000 r/min (mm/s) is 5 s or less. ・Servo motor speed is 150 r/min (mm/s) or higher. ・The load to servo motor (mass of linear servo motor's primary side or direct drive motor) inertia ratio is 100 times or less. ・The acceleration/deceleration torque is 10% or more of the rated torque.
		2. The load to motor inertia ratio was not estimated due to such as an oscillation.	Set to the auto tuning mode that does not estimate the load to motor inertia ratio as follows, and then execute the one-touch tuning. ・Select "Auto tuning mode 2 (_ _ _ 2)", "Manual mode (_ _ _ 3)", or "2 gain adjustment mode 2 (_ _ _ 4)" of "Gain adjustment mode selection" in [Pr. PA08]. ・Set [Pr. PB06 Load to motor inertia ratio/load to motor mass ratio] properly with manual setting.
C00F	One-touch tuning disabled	"One-touch tuning function selection" in [Pr. PA21] is "Disabled (_ _ _ 0)".	Select "Enabled (_ _ _ 1)".

(5) If an alarm occur

If an alarm occurs during tuning, one-touch tuning will be forcibly terminated.

Remove the cause of the alarm and execute one-touch tuning again.

(6) If a warning occur

If a warning which continue the motor driving occurs during the tuning, one-touch tuning will be continued.

If a warning which does not continue the motor driving occurs during the tuning, one-touch tuning will be stopped.

(7) Clearing one-touch tuning

You can clear the parameter values set with one-touch tuning.

Refer to table 6.1 for the parameters which you can clear.

Clicking "Return to value before adjustment" in the one-touch tuning window of MR Configurator2 enables to return the parameter to the value before clicking "start".

In addition, pushing "Return to initial value" in the one-touch tuning window enables to rewrite the parameter to the initial value.

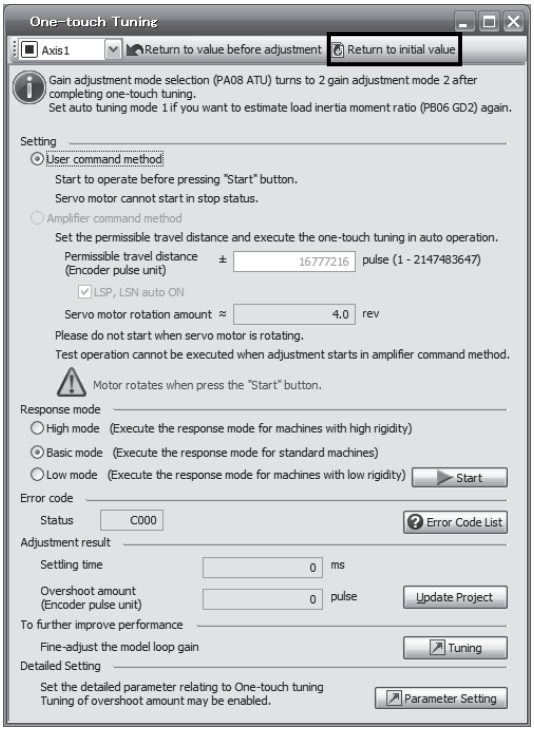

Clearing one-touch tuning is completed, the following window will be displayed. (returning to initial value)

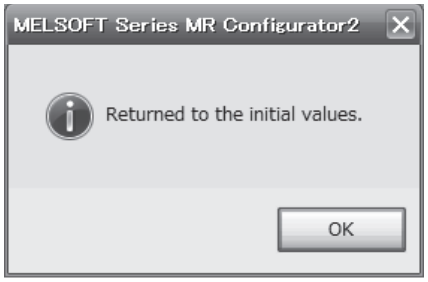

6.2.3 Caution for one-touch tuning

(1) The tuning is not available in the torque mode.

(2) The one-touch tuning cannot be executed while an alarm or warning which does not continue the motor driving is occurring.

(3) The tuning is not available during the following test operation mode.

(a) Output signal (DO) forced output

(b) Motor-less operation

(4) If one-touch tuning is performed when the gain switching function is enabled, vibration and/or unusual noise may occur during the tuning.

6.3 Auto tuning

6.3.1 Auto tuning mode

The servo amplifier has a real-time auto tuning function which estimates the machine characteristic (load to motor inertia ratio) in real time and automatically sets the optimum gains according to that value. This function permits ease of gain adjustment of the servo amplifier.

(1) Auto tuning mode 1
The servo amplifier is factory-set to the auto tuning mode 1.
In this mode, the load to motor inertia ratio of a machine is always estimated to set the optimum gains automatically.
The following parameters are automatically adjusted in the auto tuning mode 1.

Parameter	Symbol	Name
PB06	GD2	Load to motor inertia ratio/load to motor mass ratio
PB07	PG1	Model loop gain
PB08	PG2	Position loop gain
PB09	VG2	Speed loop gain
PB10	VIC	Speed integral compensation

POINT

●The auto tuning mode 1 may not be performed properly if all of the following conditions are not satisfied.
- The acceleration/deceleration time constant to reach 2000 r/min (mm/s) is 5 s or less.
- Servo motor speed is 150 r/min (mm/s) or higher.
- The load to servo motor (mass of linear servo motor's primary side or direct drive motor) inertia ratio is 100 times or less.
- The acceleration/deceleration torque is 10% or more of the rated torque.

●Under operating conditions which will impose sudden disturbance torque during acceleration/deceleration or on a machine which is extremely loose, auto tuning may not function properly, either. In such cases, use the auto tuning mode 2 or manual mode to make gain adjustment.

(2) Auto tuning mode 2

Use the auto tuning mode 2 when proper gain adjustment cannot be made by auto tuning mode 1. Since the load to motor inertia ratio is not estimated in this mode, set the value of a correct load to motor inertia ratio in [Pr. PB06].

The following parameters are automatically adjusted in the auto tuning mode 2.

Parameter	Symbol	Name
PB07	PG1	Model loop gain
PB08	PG2	Position loop gain
PB09	VG2	Speed loop gain
PB10	VIC	Speed integral compensation

6.3.2 Auto tuning mode basis

The block diagram of real-time auto tuning is shown below.

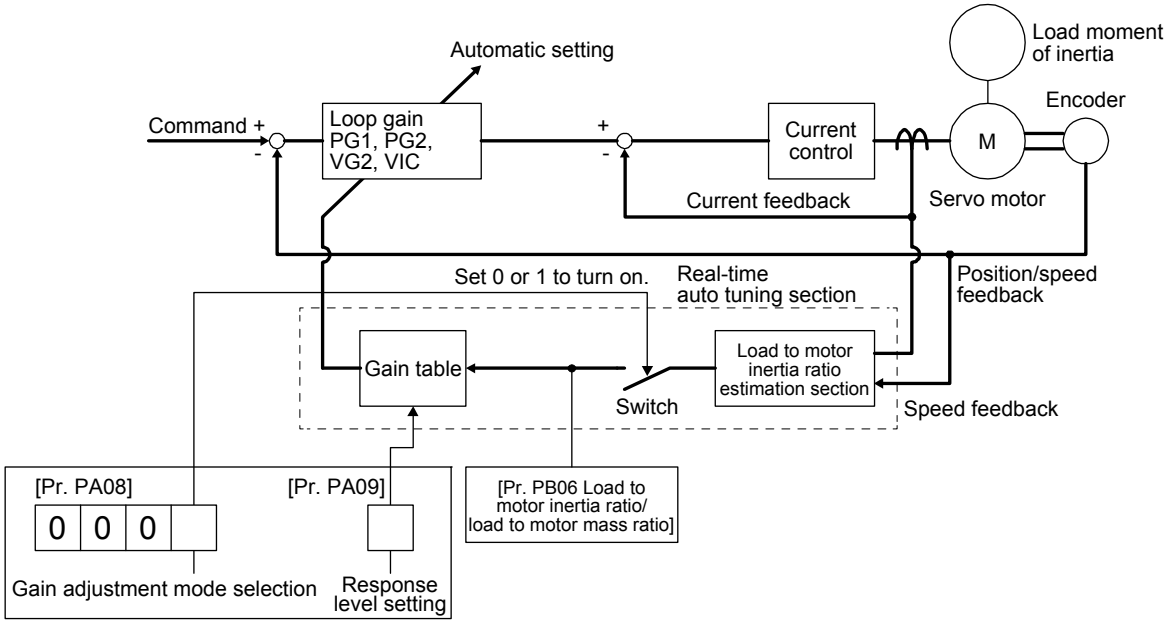

When a servo motor is accelerated/decelerated, the load to motor inertia ratio estimation section always estimates the load to motor inertia ratio from the current and speed of the servo motor. The results of estimation are written to [Pr. PB06 Load to motor inertia ratio/load to motor mass ratio]. These results can be confirmed on the status display screen of the MR Configurator2.

If you have already known the value of the load to motor inertia ratio or failed to estimate, set "Gain adjustment mode selection" to "Auto tuning mode 2 (_ _ _ 2)" in [Pr. PA08] to stop the estimation (turning off the switch in above diagram), and set the load to motor inertia ratio or load to motor mass ratio ([Pr. PB06]) manually.

From the preset load to motor inertia ratio ([Pr. PB06]) value and response ([Pr. PA09]), the optimum loop gains are automatically set on the basis of the internal gain table.

The auto tuning results are saved in the EEP-ROM of the servo amplifier every 60 minutes since power-on. At power-on, auto tuning is performed with the value of each loop gain saved in the EEP-ROM being used as an initial value.

POINT

- If sudden disturbance torque is imposed during operation, the load to motor inertia ratio may be misestimated temporarily. In such a case, set "Gain adjustment mode selection" to "Auto tuning mode 2 (_ _ _ 2)" in [Pr. PA08] and then set the correct load to motor inertia ratio in [Pr. PB06].
- When any of the auto tuning mode 1 and auto tuning mode settings is changed to the manual mode 2 setting, the current loop gains and load to motor inertia ratio estimation value are saved in the EEP-ROM.

6.3.3 Adjustment procedure by auto tuning

Since auto tuning is enabled before shipment from the factory, simply running the servo motor automatically sets the optimum gains that match the machine. Merely changing the response level setting value as required completes the adjustment. The adjustment procedure is as follows.

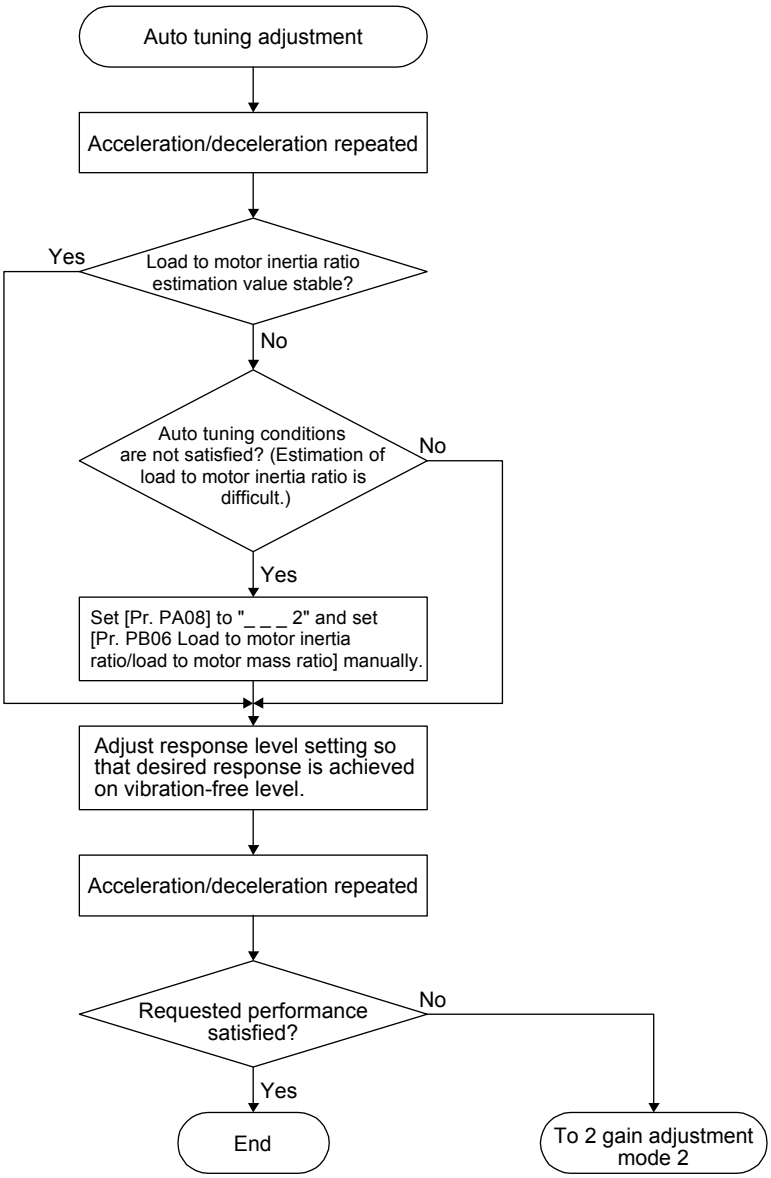

6.3.4 Response level setting in auto tuning mode

Set the response of the whole servo system by [Pr. PA09]. As the response level setting is increased, the trackability to a command improves and settling time decreases, but setting the response level too high will generate vibration. Set a value to obtain the desired response level within the vibration-free range.
If the response level setting cannot be increased up to the desired response because of machine resonance beyond 100 Hz, filter tuning mode selection in [Pr. PB01] or machine resonance suppression filter in [Pr. PB13] to [Pr. PB16], [Pr. PB46] to [Pr. PB51] may be used to suppress machine resonance. Suppressing machine resonance may allow the response level setting to increase. Refer to section 7.2 and 7.3 for settings of the adaptive tuning mode and machine resonance suppression filter.

[Pr. PA09]

Setting value	Machine characteristic		Reference (setting value of MR-J3)
	Response	Guideline for machine resonance frequency [Hz]	
1	Low response	2.7	
2		3.6	
3		4.9	
4		6.6	
5		10.0	1
6		11.3	2
7		12.7	3
8		14.3	4
9		16.1	5
10		18.1	6
11		20.4	7
12		23.0	8
13		25.9	9
14		29.2	10
15		32.9	11
16		37.0	12
17		41.7	13
18		47.0	14
19	Middle response	52.9	15
20		59.6	16

Setting value	Machine characteristic		Reference (setting value of MR-J3)
	Response	Guideline for machine resonance frequency [Hz]	
21	Middle response	67.1	17
22		75.6	18
23		85.2	19
24		95.9	20
25		108.0	21
26		121.7	22
27		137.1	23
28		154.4	24
29		173.9	25
30		195.9	26
31		220.6	27
32		248.5	28
33		279.9	29
34		315.3	30
35		355.1	31
36		400.0	32
37		446.6	
38		501.2	
39	High response	571.5	
40		642.7	

6.4 Manual mode

If you are not satisfied with the adjustment of auto tuning, you can adjust all gains manually.

> POINT
>
> ●If machine resonance occurs, filter tuning mode selection in [Pr. PB01] or machine resonance suppression filter in [Pr. PB13] to [Pr. PB16] and [Pr. PB46] to [Pr. PB51] may be used to suppress machine resonance. (Refer to section 7.2 to 7.3.)

(1) For speed control

(a) Parameter

The following parameters are used for gain adjustment.

Parameter	Symbol	Name
PB06	GD2	Load to motor inertia ratio/load to motor mass ratio
PB07	PG1	Model loop gain
PB09	VG2	Speed loop gain
PB10	VIC	Speed integral compensation

(b) Adjustment procedure

Step	Operation	Description
1	Brief-adjust with auto tuning. Refer to section 6.2.3.	
2	Change the setting of auto tuning to the manual mode ([Pr. PA08]: _ _ _ 3).	
3	Set the estimated value to the load to motor inertia ratio/load to motor mass ratio. (If the estimate value with auto tuning is correct, setting change is not required.)	
4	Set a small value to the model loop gain. Set a large value to the speed integral compensation.	
5	Increase the speed loop gain within the vibration- and unusual noise-free range, and return slightly if vibration takes place.	Increase the speed loop gain.
6	Decrease the speed integral compensation within the vibration-free range, and return slightly if vibration takes place.	Decrease the time constant of the speed integral compensation.
7	Increase the model loop gain, and return slightly if overshoot takes place.	Increase the model loop gain.
8	If the gains cannot be increased due to mechanical system resonance or the like and the desired response cannot be achieved, response may be increased by suppressing resonance with the adaptive tuning mode or machine resonance suppression filter and then executing steps 3 to 7.	Suppression of machine resonance Refer to section 7.2 and 7.3.
9	While checking the motor status, fine-adjust each gain.	Fine adjustment

(c) Parameter adjustment

1) [Pr. PB09 Speed loop gain]

This parameter determines the response level of the speed control loop. Increasing this value enhances response but a too high value will make the mechanical system liable to vibrate. The actual response frequency of the speed loop is as indicated in the following expression.

$$\text{Speed loop response frequency [Hz]} = \frac{\text{Speed loop gain}}{(1 + \text{Load to motor inertia ratio}) \times 2\pi}$$

2) [Pr. PB10 Speed integral compensation]

To eliminate stationary deviation against a command, the speed control loop is under proportional integral control. For the speed integral compensation, set the time constant of this integral control. Increasing the setting lowers the response level. However, if the load to motor inertia ratio is large or the mechanical system has any vibratory element, the mechanical system is liable to vibrate unless the setting is increased to some degree. The guideline is as indicated in the following expression.

$$\text{Speed integral compensation setting [ms]} \geq \frac{2000 \text{ to } 3000}{\text{Speed loop gain}/(1 + \text{Load to motor inertia ratio})}$$

3) [Pr. PB07 Model loop gain]

This parameter determines the response level to a speed command. Increasing the value improves trackability to a speed command, but a too high value will make overshoot liable to occur at settling.

$$\text{Model loop gain guideline} \leq \frac{\text{Speed loop gain}}{(1 + \text{Load to motor inertia ratio})} \times \left(\frac{1}{4} \text{ to } \frac{1}{8}\right)$$

(2) For position control

(a) Parameter

The following parameters are used for gain adjustment.

Parameter	Symbol	Name
PB06	GD2	Load to motor inertia ratio/load to motor mass ratio
PB07	PG1	Model loop gain
PB08	PG2	Position loop gain
PB09	VG2	Speed loop gain
PB10	VIC	Speed integral compensation

(b) Adjustment procedure

Step	Operation	Description
1	Brief-adjust with auto tuning. Refer to section 6.2.3.	
2	Change the setting of auto tuning to the manual mode ([Pr. PA08]: _ _ _ 3).	
3	Set the estimated value to the load to motor inertia ratio/load to motor mass ratio. (If the estimate value with auto tuning is correct, setting change is not required.)	
4	Set a small value to the model loop gain and the position loop gain. Set a large value to the speed integral compensation.	
5	Increase the speed loop gain within the vibration- and unusual noise-free range, and return slightly if vibration takes place.	Increase the speed loop gain.
6	Decrease the speed integral compensation within the vibration-free range, and return slightly if vibration takes place.	Decrease the time constant of the speed integral compensation.
7	Increase the position loop gain, and return slightly if vibration takes place.	Increase the position loop gain.
8	Increase the model loop gain, and return slightly if overshoot takes place.	Increase the model loop gain.
9	If the gains cannot be increased due to mechanical system resonance or the like and the desired response cannot be achieved, response may be increased by suppressing resonance with the adaptive tuning mode or machine resonance suppression filter and then executing steps 3 to 8.	Suppression of machine resonance Refer to section 7.2 and 7.3.
10	While checking the settling characteristic and motor status, fine-adjust each gain.	Fine adjustment

(c) Parameter adjustment

1) [Pr. PB09 Speed loop gain]

This parameter determines the response level of the speed control loop. Increasing this value enhances response but a too high value will make the mechanical system liable to vibrate. The actual response frequency of the speed loop is as indicated in the following expression.

$$\text{Speed loop response frequency [Hz]} = \frac{\text{Speed loop gain}}{(1 + \text{Load to motor inertia ratio}) \times 2\pi}$$

2) [Pr. PB10 Speed integral compensation]

To eliminate stationary deviation against a command, the speed control loop is under proportional integral control. For the speed integral compensation, set the time constant of this integral control. Increasing the setting lowers the response level. However, if the load to motor inertia ratio is large or the mechanical system has any vibratory element, the mechanical system is liable to vibrate unless the setting is increased to some degree. The guideline is as indicated in the following expression.

$$\text{Speed integral compensation setting [ms]} \geq \frac{2000 \text{ to } 3000}{\text{Speed loop gain}/(1 + \text{Load to motor inertia ratio})}$$

3) [Pr. PB08 Position loop gain]
This parameter determines the response level to a disturbance to the position control loop. Increasing the value increases the response level to the disturbance, but a too high value will increase vibration of the mechanical system.

$$\text{Position loop gain guideline} \leq \frac{\text{Speed loop gain}}{(1 + \text{Load to motor inertia ratio})} \times \left(\frac{1}{4} \text{ to } \frac{1}{8}\right)$$

4) [Pr. PB07 Model loop gain]
This parameter determines the response level to a position command. Increasing the value improves trackability to a position command, but a too high value will make overshoot liable to occur at settling.

$$\text{Model loop gain guideline} \leq \frac{\text{Speed loop gain}}{(1 + \text{Load to motor inertia ratio})} \times \left(\frac{1}{4} \text{ to } \frac{1}{8}\right)$$

6.5 2 gain adjustment mode

The 2 gain adjustment mode is used to match the position loop gains of the axes when performing the interpolation operation of servo motors of two or more axes for an X-Y table or the like. In this mode, manually set the model loop gain that determines command trackability. Other parameters for gain adjustment are set automatically.

(1) 2 gain adjustment mode 1 (interpolation mode)
The 2 gain adjustment mode 1 manually set the model loop gain that determines command trackability. The mode constantly estimates the load to motor inertia ratio, and automatically set other parameters for gain adjustment to optimum gains using auto tuning response.
The following parameters are used for 2 gain adjustment mode 1.

(a) Automatically adjusted parameter
The following parameters are automatically adjusted by auto tuning.

Parameter	Symbol	Name
PB06	GD2	Load to motor inertia ratio/load to motor mass ratio
PB08	PG2	Position loop gain
PB09	VG2	Speed loop gain
PB10	VIC	Speed integral compensation

(b) Manually adjusted parameter
The following parameters are adjustable manually.

Parameter	Symbol	Name
PA09	RSP	Auto tuning response
PB07	PG1	Model loop gain

(2) 2 gain adjustment mode 2

Use 2 gain adjustment mode 2 when proper gain adjustment cannot be made with 2 gain adjustment mode 1. Since the load to motor inertia ratio is not estimated in this mode, set the value of a proper load to motor inertia ratio in [Pr. PB06].

The following parameters are used for 2 gain adjustment mode 2.

(a) Automatically adjusted parameter

The following parameters are automatically adjusted by auto tuning.

Parameter	Symbol	Name
PB08	PG2	Position loop gain
PB09	VG2	Speed loop gain
PB10	VIC	Speed integral compensation

(b) Manually adjusted parameter

The following parameters are adjustable manually.

Parameter	Symbol	Name
PA09	RSP	Auto tuning response
PB06	GD2	Load to motor inertia ratio/load to motor mass ratio
PB07	PG1	Model loop gain

(3) Adjustment procedure of 2 gain adjustment mode

POINT

●Set the same value in [Pr. PB07 Model loop gain] for the axis used in 2 gain adjustment mode.

Step	Operation	Description
1	Set to the auto tuning mode.	Select the auto tuning mode 1.
2	During operation, increase the response level setting value in [Pr. PA09], and return the setting if vibration occurs.	Adjustment in auto tuning mode 1.
3	Check value of the model loop gain and the load to motor inertia ratio in advance.	Check the upper setting limits.
4	Set the 2 gain adjustment mode 1 ([Pr. PA08]: _ _ _ 0).	Select the 2 gain adjustment mode 1 (interpolation mode).
5	When the load to motor inertia ratio is different from the design value, select the 2 gain adjustment mode 2 ([Pr. PA08]: _ _ _ 4) and then set the load to motor inertia ratio manually in [Pr. PB06].	Check the load to motor inertia ratio.
6	Set the model loop gain of all the axes to be interpolated to the same value. At that time, adjust to the setting value of the axis, which has the smallest model loop gain.	Set model loop gain.
7	Considering the interpolation characteristic and motor status, fine-adjust the model loop gain and response level setting.	Fine adjustment

(4) Parameter adjustment

[Pr. PB07 Model loop gain]

This parameter determines the response level of the position control loop. Increasing the value improves trackability to a position command, but a too high value will make overshoot liable to occur at settling. Number of droop pulses is determined by the following expression.

$$\text{Number of droop pulses [pulse]} = \frac{\text{Position command frequency [pulse/s]}}{\text{Model loop gain setting}}$$

Position command frequency differs depending on the operation mode.

Rotary servo motor and direct drive motor:

$$\text{Position command frequency} = \frac{\text{Servo motor speed [r/min]}}{60} \times \text{Encoder resolution (number of pulses per servo motor revolution)}$$

Linear servo motor:

Position command frequency = Speed [mm/s] ÷ Encoder resolution (travel distance per pulse)

7. SPECIAL ADJUSTMENT FUNCTIONS

POINT

- The functions given in this chapter need not be used normally. Use them if you are not satisfied with the machine status after making adjustment in the methods in chapter 6.
- When you use a linear servo motor, replace the following words in the left to the words in the right.

Load to motor inertia ratio	→	Load to motor mass ratio
Torque	→	Thrust

7.1 Filter setting

The following filters are available with MR-J4 servo amplifiers.

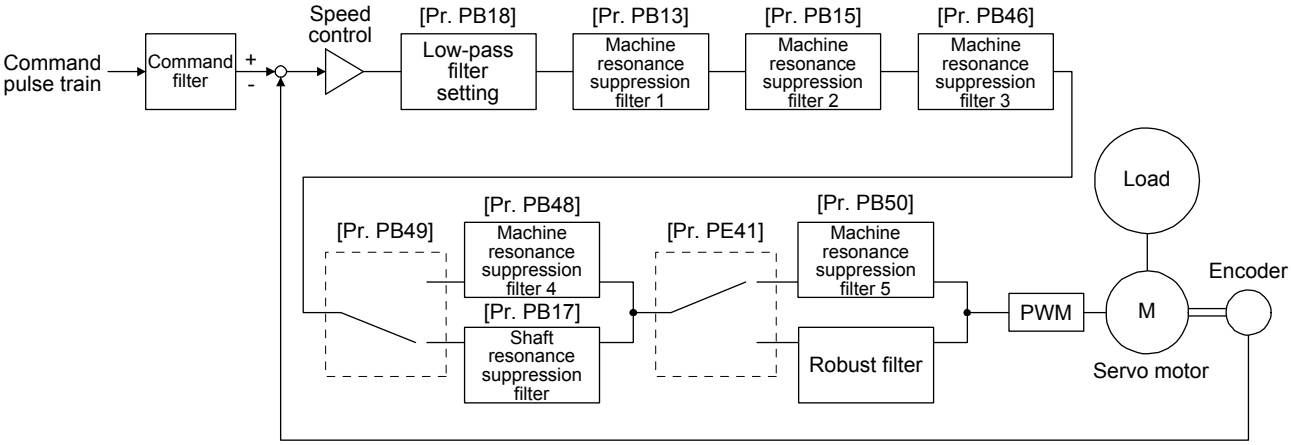

7.1.1 Machine resonance suppression filter

POINT

- The machine resonance suppression filter is a delay factor for the servo system. Therefore, vibration may increase if you set an incorrect resonance frequency or set notch characteristics too deep or too wide.
- If the frequency of machine resonance is unknown, decrease the notch frequency from higher to lower ones in order. The optimum notch frequency is set at the point where vibration is minimal.
- A wider notch has a higher effect on machine resonance suppression but increases a phase delay and may increase vibration.
- A deeper notch has a higher effect on machine resonance suppression but increases a phase delay and may increase vibration.
- The machine characteristic can be grasped beforehand by the machine analyzer on MR Configurator2. This allows the required notch frequency and notch characteristics to be determined.

If a mechanical system has a unique resonance point, increasing the servo system response level may cause resonance (vibration or unusual noise) in the mechanical system at that resonance frequency. Using the machine resonance suppression filter and adaptive tuning can suppress the resonance of the mechanical system. The setting range is 10 Hz to 4500 Hz.

(1) Function

The machine resonance suppression filter is a filter function (notch filter) which decreases the gain of the specific frequency to suppress the resonance of the mechanical system. You can set the frequency (notch frequency) at which the gain is decreased, and the notch depth and width.

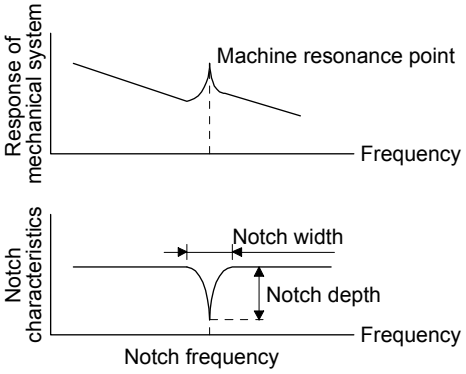

You can set five machine resonance suppression filters at most.

Filter	Setting parameter	Precaution	Parameter that is reset with vibration tough drive function	Parameter automatically adjusted with one-touch tuning
Machine resonance suppression filter 1	PB01/PB13/PB14	The filter can be set automatically with "Filter tuning mode selection" in [Pr. PB01].	PB13	PB01/PB13/PB14
Machine resonance suppression filter 2	PB15/PB16		PB15	PB15/PB16
Machine resonance suppression filter 3	PB46/PB47			PB47
Machine resonance suppression filter 4	PB48/PB49	Enabling the machine resonance suppression filter 4 disables the shaft resonance suppression filter. Using the shaft resonance suppression filter is recommended because it is adjusted properly depending on the usage situation. The shaft resonance suppression filter is enabled for the initial setting.		PB48/PB49
Machine resonance suppression filter 5	PB50/PB51	Enabling the robust filter disables the machine resonance suppression filter 5. The robust filter is disabled for the initial setting.		PB51

(2) Parameter

(a) Machine resonance suppression filter 1 ([Pr. PB13] and [Pr. PB14])

Set the notch frequency, notch depth and notch width of the machine resonance suppression filter 1 ([Pr. PB13] and [Pr. PB14])

When you select "Manual setting (_ _ _ 2)" of "Filter tuning mode selection" in [Pr. PB01], the setting of the machine resonance suppression filter 1 is enabled.

(b) Machine resonance suppression filter 2 ([Pr. PB15] and [Pr. PB16])

To use this filter, select "Enabled (_ _ _ 1)" of "Machine resonance suppression filter 2 selection" in [Pr. PB16].

How to set the machine resonance suppression filter 2 ([Pr. PB15] and [Pr. PB16]) is the same as for the machine resonance suppression filter 1 ([Pr. PB13] and [Pr. PB14]).

(c) Machine resonance suppression filter 3 ([Pr. PB46] and [Pr. PB47])

To use this filter, select "Enabled (_ _ _ 1)" of "Machine resonance suppression filter 3 selection" in [Pr. PB47].

How to set the machine resonance suppression filter 3 ([Pr. PB46] and [Pr. PB47]) is the same as for the machine resonance suppression filter 1 ([Pr. PB13] and [Pr. PB14]).

(d) Machine resonance suppression filter 4 ([Pr. PB48] and [Pr. PB49])

To use this filter, select "Enabled (_ _ _ 1)" of "Machine resonance suppression filter 4 selection" in [Pr. PB49]. However, enabling the machine resonance suppression filter 4 disables the shaft resonance suppression filter.

How to set the machine resonance suppression filter 4 ([Pr. PB48] and [Pr. PB49]) is the same as for the machine resonance suppression filter 1 ([Pr. PB13] and [Pr. PB14]).

(e) Machine resonance suppression filter 5 ([Pr. PB50] and [Pr. PB51])

To use this filter, select "Enabled (_ _ _ 1)" of "Machine resonance suppression filter 5 selection" in [Pr. PB51]. However, enabling the robust filter ([Pr. PE41: _ _ _ 1]) disables the machine resonance suppression filter 5.

How to set the machine resonance suppression filter 5 ([Pr. PB50] and [Pr. PB51]) is the same as for the machine resonance suppression filter 1 ([Pr. PB13] and [Pr. PB14]).

7.1.2 Adaptive filter II

POINT

- The machine resonance frequency which adaptive filter II (adaptive tuning) can respond to is about 100 Hz to 2.25 kHz. As for the resonance frequency out of the range, set manually.
- When adaptive tuning is executed, vibration sound increases as an excitation signal is forcibly applied for several seconds.
- When adaptive tuning is executed, machine resonance is detected for a maximum of 10 seconds and a filter is generated. After filter generation, the adaptive tuning mode automatically shifts to the manual setting.
- Adaptive tuning generates the optimum filter with the currently set control gains. If vibration occurs when the response setting is increased, execute adaptive tuning again.
- During adaptive tuning, a filter having the best notch depth at the set control gain is generated. To allow a filter margin against machine resonance, increase the notch depth in the manual setting.
- Adaptive vibration suppression control may provide no effect on a mechanical system which has complex resonance characteristics.

(1) Function

Adaptive filter II (adaptive tuning) is a function in which the servo amplifier detects machine vibration for a predetermined period of time and sets the filter characteristics automatically to suppress mechanical system vibration. Since the filter characteristics (frequency, depth) are set automatically, you need not be conscious of the resonance frequency of a mechanical system.

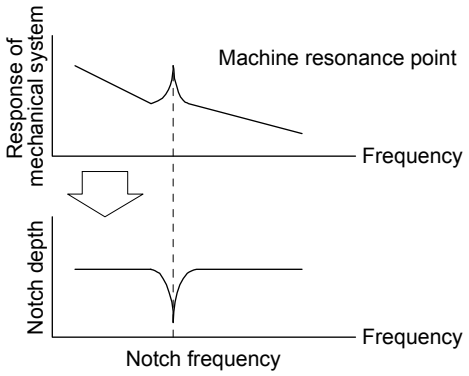

When machine resonance is large and frequency is low

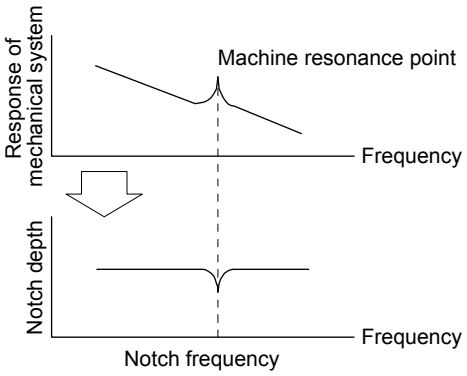

When machine resonance is small and frequency is high

(2) Parameter

Select how to set the filter tuning in [Pr. PB01 Adaptive tuning mode (adaptive filter II)].

[Pr. PB01]

0	0	0	

Filter tuning mode selection

Setting value	Filter tuning mode selection	Automatically set parameter
0	Disabled	
1	Automatic setting	PB13/PB14
2	Manual setting	

(3) Adaptive tuning mode procedure

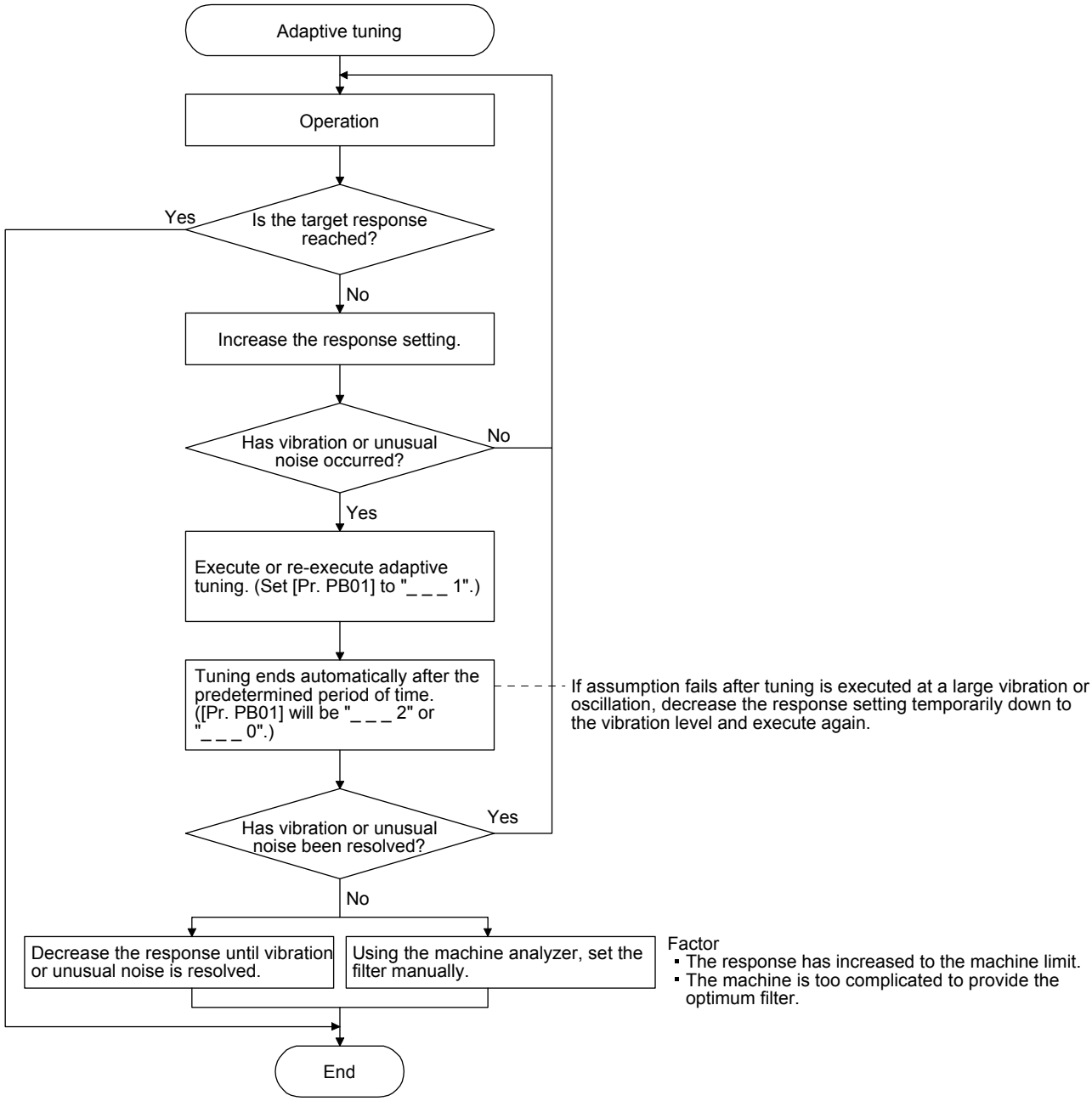

7.1.3 Shaft resonance suppression filter

> **POINT**
>
> ●This filter is set properly by default according to servo motor you use and load moment of inertia. It is recommended that [Pr. PB23] be set to "_ _ _ 0" (automatic setting) because changing "Shaft resonance suppression filter selection" in [Pr. PB23] or [Pr. PB17 Shaft resonance suppression filter] may lower the performance.

(1) Function

When a load is mounted to the servo motor shaft, resonance by shaft torsion during driving may generate a mechanical vibration at high frequency. The shaft resonance suppression filter suppresses the vibration.

When you select "Automatic setting", the filter will be set automatically on the basis of the motor you use and the load to servo motor inertia ratio. The disabled setting increases the response of the servo amplifier for high resonance frequency.

(2) Parameter

Set "Shaft resonance suppression filter selection" in [Pr. PB23].

[Pr. PB23]

0	0	0	

Shaft resonance suppression filter selection
0: Automatic setting
1: Manual setting
2: Disabled

To set [Pr. PB17 Shaft resonance suppression filter] automatically, select "Automatic setting".

To set [Pr. PB17 Shaft resonance suppression filter] manually, select "Manual setting". The setting values are as follows.

Shaft resonance suppression filter setting frequency selection

Setting value	Frequency [Hz]	Setting value	Frequency [Hz]
_ _ 0 0	Disabled	_ _ 1 0	562
_ _ 0 1	Disabled	_ _ 1 1	529
_ _ 0 2	4500	_ _ 1 2	500
_ _ 0 3	3000	_ _ 1 3	473
_ _ 0 4	2250	_ _ 1 4	450
_ _ 0 5	1800	_ _ 1 5	428
_ _ 0 6	1500	_ _ 1 6	409
_ _ 0 7	1285	_ _ 1 7	391
_ _ 0 8	1125	_ _ 1 8	375
_ _ 0 9	1000	_ _ 1 9	360
_ _ 0 A	900	_ _ 1 A	346
_ _ 0 B	818	_ _ 1 B	333
_ _ 0 C	750	_ _ 1 C	321
_ _ 0 D	692	_ _ 1 D	310
_ _ 0 E	642	_ _ 1 E	300
_ _ 0 F	600	_ _ 1 F	290

7.1.4 Low-pass filter

(1) Function

When a ball screw or the like is used, resonance of high frequency may occur as the response level of the servo system is increased. To prevent this, the low-pass filter is enabled for a torque command as a default. The filter frequency of the low-pass filter is automatically adjusted to the value in the following equation.

$$\text{Filter frequency ([rad/s])} = \frac{VG2}{1 + GD2} \times 10$$

However, when an automatically adjusted value is smaller than VG2, the filter frequency will be the VG2 value. To set [Pr. PB18] manually, select "Manual setting (_ _ 1 _)" of "Low-pass filter selection" in [Pr. PB23].

(2) Parameter

Set "Low-pass filter selection" in [Pr. PB23].

[Pr. PB23]

0	0		0

Low-pass filter selection
0: Automatic setting
1: Manual setting
2: Disabled

7.1.5 Advanced vibration suppression control II

POINT

- The function is enabled when "Gain adjustment mode selection" in [Pr. PA08] is "Auto tuning mode 2 (_ _ _ 2)", "Manual mode (_ _ _ 3)", or "2 gain adjustment mode 2 (_ _ _ 4)".
- The machine resonance frequency supported in the vibration suppression control tuning mode is 1.0 Hz to 100.0 Hz. As for the vibration out of the range, set manually.
- Stop the servo motor before changing the vibration suppression control-related parameters. Otherwise, it may cause an unexpected operation.
- For positioning operation during execution of vibration suppression control tuning, provide a stop time to ensure a stop after vibration damping.
- Vibration suppression control tuning may not make normal estimation if the residual vibration at the servo motor side is small.
- Vibration suppression control tuning sets the optimum parameter with the currently set control gains. When the response setting is increased, set vibration suppression control tuning again.
- When using the vibration suppression control 2, set "_ _ _ 1" in [Pr. PA24].

(1) Function

Vibration suppression control is used to further suppress load-side vibration, such as work-side vibration and base shake. The servo motor-side operation is adjusted for positioning so that the machine does not vibrate.

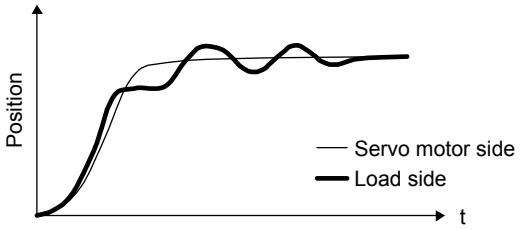

Vibration suppression: off (normal)

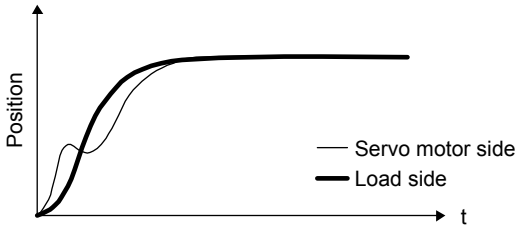

Vibration suppression control: on

When the advanced vibration suppression control II ([Pr. PB02 Vibration suppression control tuning mode]) is executed, the vibration frequency at load side is automatically estimated to suppress machine side vibration two times at most.

In the vibration suppression control tuning mode, this mode shifts to the manual setting after the positioning operation is performed the predetermined number of times. For manual setting, adjust the vibration suppression control 1 with [Pr. PB19] to [Pr. PB22] and vibration suppression control 2 with [Pr. PB52] to [Pr. PB55].

(2) Parameter

Set [Pr. PB02 Vibration suppression control tuning mode (advanced vibration suppression control II)]. When you use a vibration suppression control, set "Vibration suppression control 1 tuning mode selection". When you use two vibration suppression controls, set "Vibration suppression control 2 tuning mode selection" in addition.

[Pr. PB02]

0	0		

Vibration suppression control 1 tuning mode

Setting value	Vibration suppression control 1 tuning mode selection	Automatically set parameter
_ _ _ 0	Disabled	
_ _ _ 1	Automatic setting	PB19/PB20/PB21/PB22
_ _ _ 2	Manual setting	

Vibration suppression control 2 tuning mode

Setting value	Vibration suppression control 2 tuning mode selection	Automatically set parameter
_ _ 0 _	Disabled	
_ _ 1 _	Automatic setting	PB52/PB53/PB54/PB55
_ _ 2 _	Manual setting	

(3) Vibration suppression control tuning procedure

The following flow chart is for the vibration suppression control 1. For the vibration suppression control 2, set "_ _ 1 _" in [Pr. PB02] to execute the vibration suppression control tuning.

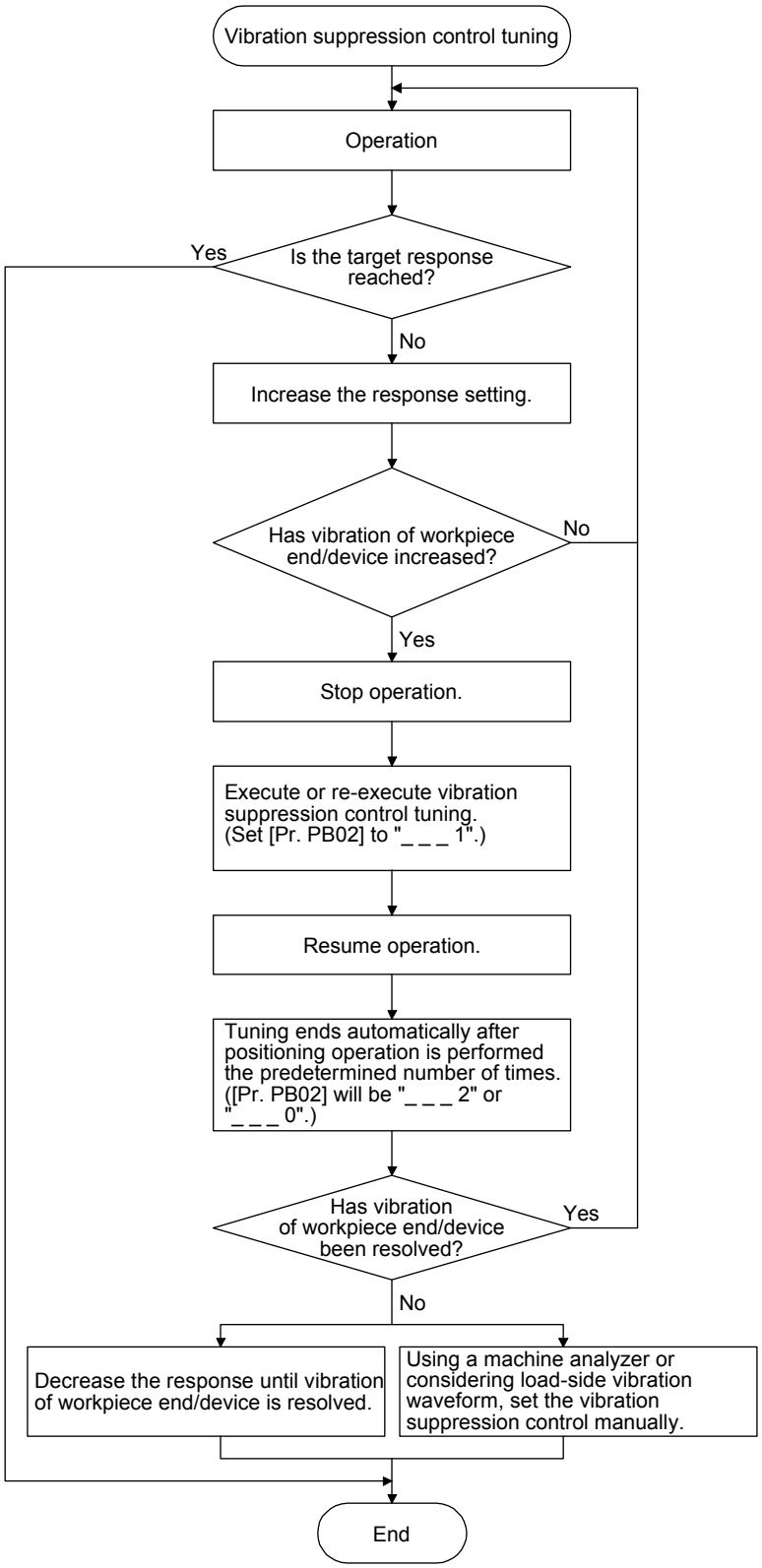

Factor
- Estimation cannot be made as load-side vibration has not been transmitted to the servo motor side.
- The response of the model loop gain has increased to the load-side vibration frequency (vibration suppression control limit).

(4) Vibration suppression control manual mode

POINT

- When load-side vibration does not show up in servo motor-side vibration, the setting of the servo motor-side vibration frequency does not produce an effect.
- When the anti-resonance frequency and resonance frequency can be confirmed using the machine analyzer or external equipment, do not set the same value but set different values to improve the vibration suppression performance.
- The setting range of [Pr. PB19], [Pr. PB20], [Pr. PB52], and [Pr. PB53] varies, depending on the value in [Pr. PB07]. If a value out of the range is set, the vibration suppression control will be disabled.

Measure work-side vibration and device shake with the machine analyzer or external measuring instrument, and set the following parameters to adjust vibration suppression control manually.

Setting item	Vibration suppression control 1	Vibration suppression control 2
Vibration suppression control - Vibration frequency	[Pr. PB19]	[Pr. PB52]
Vibration suppression control - Resonance frequency	[Pr. PB20]	[Pr. PB53]
Vibration suppression control - Vibration frequency damping	[Pr. PB21]	[Pr. PB54]
Vibration suppression control - Resonance frequency damping	[Pr. PB22]	[Pr. PB55]

Step 1 Select "Manual setting (_ _ _ 2)" of "Vibration suppression control 1 tuning mode selection" or "Manual setting (_ _ 2 _)" of "Vibration suppression control 2 tuning mode selection" in [Pr. PB02].

Step 2 Set "Vibration suppression control - Vibration frequency" and "Vibration suppression control - Resonance frequency" as follows.

However, the value of [Pr. PB07 Model loop gain], vibration frequency, and resonance frequency have the following usable range and recommended range.

Vibration suppression control	Usable range	Recommended setting range
Vibration suppression control 1	[Pr. PB19] > 1/2π × (0.9 × [Pr. PB07]) [Pr. PB20] > 1/2π × (0.9 × [Pr. PB07])	[Pr. PB19] > 1/2π × (1.5 × [Pr. PB07]) [Pr. PB20] > 1/2π × (1.5 × [Pr. PB07])
Vibration suppression control 2	When [Pr. PB19] < [Pr. PB52], [Pr. PB52] > (5.0 + 0.1 × [Pr. PB07]) [Pr. PB53] > (5.0 + 0.1 × [Pr. PB07]) 1.1 < [Pr. PB52]/[Pr. PB19] < 5.5 [Pr. PB07] < 2π (0.3 × [Pr. PB19] + 1/8 × [Pr. PB52])	When [Pr. PB19] < [Pr. PB52], [Pr. PB52], [Pr. PB53] > 6.25 Hz 1.1 < [Pr. PB52]/[Pr. PB19] < 4 [Pr. PB07] < 1/3 × (4 × [Pr. PB19] + 2 × [Pr. PB52])

(a) When a vibration peak can be confirmed with machine analyzer using MR Configurator2, or external equipment.

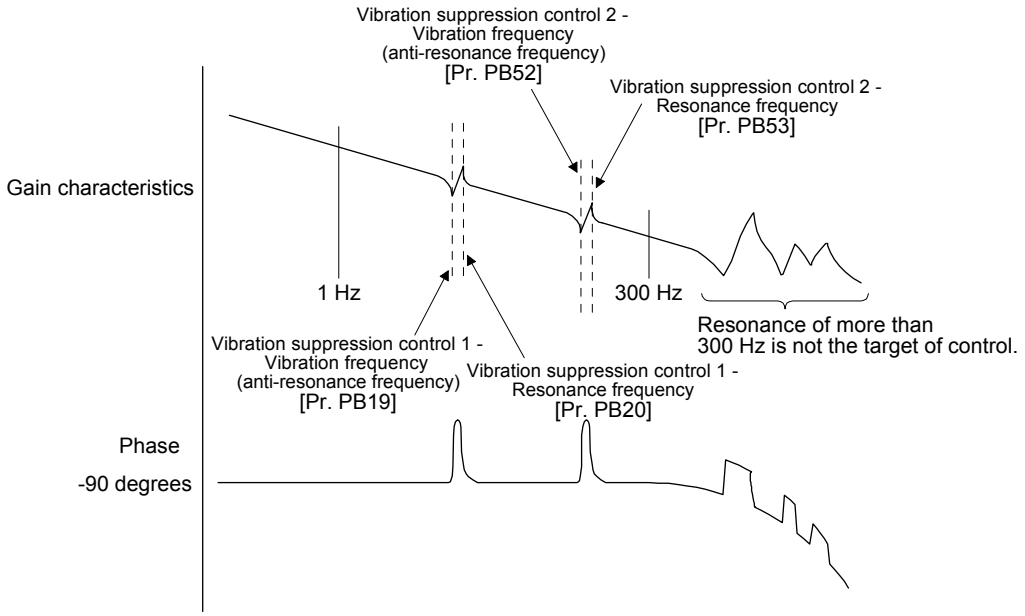

(b) When vibration can be confirmed using monitor signal or external sensor

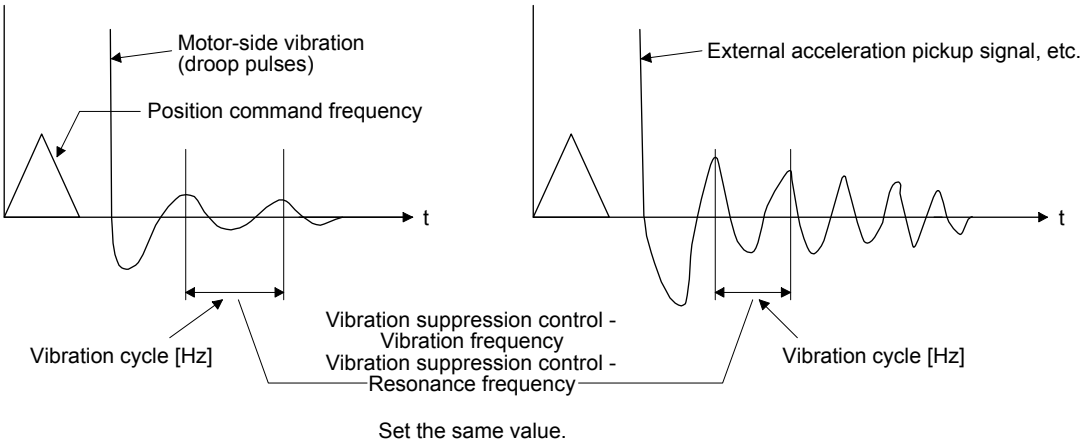

Step 3 Fine-adjust "Vibration suppression control - Vibration frequency damping" and "Vibration suppression control - Resonance frequency damping".

7.1.6 Command notch filter

POINT

- By using the advanced vibration suppression control II and the command notch filter, the load-side vibration of three frequencies can be suppressed.
- The frequency range of machine vibration, which can be supported by the command notch filter, is between 4.5 Hz and 2250 Hz. Set a frequency close to the machine vibration frequency and within the range.
- When [Pr. PB45 Command notch filter] is changed during the positioning operation, the changed setting is not reflected. The setting is reflected approximately 150 ms after the servo motor stops (after servo-lock).

(1) Function

Command notch filter has a function that lowers the gain of the specified frequency contained in a position command. By lowering the gain, load-side vibration, such as work-side vibration and base shake, can be suppressed. Which frequency to lower the gain and how deep to lower the gain can be set.

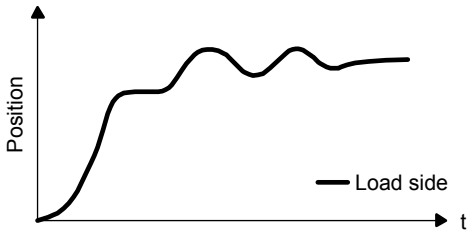

Command notch filter: disabled

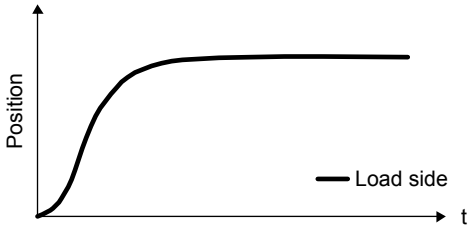

Command notch filter: enabled

(2) Parameter

Set [Pr. PB45 Command notch filter] as shown below. For the command notch filter setting frequency, set the closest value to the vibration frequency [Hz] at the load side.

[Pr. PB45]

0			

Notch depth — Command notch filter setting frequency

Setting value	Depth [dB]
0	-40.0
1	-24.1
2	-18.1
3	-14.5
4	-12.0
5	-10.1
6	-8.5
7	-7.2
8	-6.0
9	-5.0
A	-4.1
B	-3.3
C	-2.5
D	-1.8
E	-1.2
F	-0.6

Setting value	Frequency [Hz]	Setting value	Frequency [Hz]	Setting value	Frequency [Hz]
00	Disabled	20	70	40	17.6
01	2250	21	66	41	16.5
02	1125	22	62	42	15.6
03	750	23	59	43	14.8
04	562	24	56	44	14.1
05	450	25	53	45	13.4
06	375	26	51	46	12.8
07	321	27	48	47	12.2
08	281	28	46	48	11.7
09	250	29	45	49	11.3
0A	225	2A	43	4A	10.8
0B	204	2B	41	4B	10.4
0C	187	2C	40	4C	10.0
0D	173	2D	38	4D	9.7
0E	160	2E	37	4E	9.4
0F	150	2F	36	4F	9.1
10	140	30	35.2	50	8.8
11	132	31	33.1	51	8.3
12	125	32	31.3	52	7.8
13	118	33	29.6	53	7.4
14	112	34	28.1	54	7.0
15	107	35	26.8	55	6.7
16	102	36	25.6	56	6.4
17	97	37	24.5	57	6.1
18	93	38	23.4	58	5.9
19	90	39	22.5	59	5.6
1A	86	3A	21.6	5A	5.4
1B	83	3B	20.8	5B	5.2
1C	80	3C	20.1	5C	5.0
1D	77	3D	19.4	5D	4.9
1E	75	3E	18.8	5E	4.7
1F	72	3F	18.2	5F	4.5

7.2 Gain switching function

You can switch gains with the function. You can switch gains during rotation and during stop, and can use a control command from a controller to switch gains during operation.

7.2.1 Applications

The following shows when you use the function.

(1) You want to increase the gains during servo-lock but decrease the gains to reduce noise during rotation.

(2) You want to increase the gains during settling to shorten the stop settling time.

(3) You want to change the gains using a control command from a controller to ensure stability of the servo system since the load to motor inertia ratio varies greatly during a stop (e.g. a large load is mounted on a carrier).

7.2.2 Function block diagram

The control gains, load to motor inertia ratio, and vibration suppression control settings are changed according to the conditions selected by [Pr. PB26 Gain switching function] and [Pr. PB27 Gain switching condition].

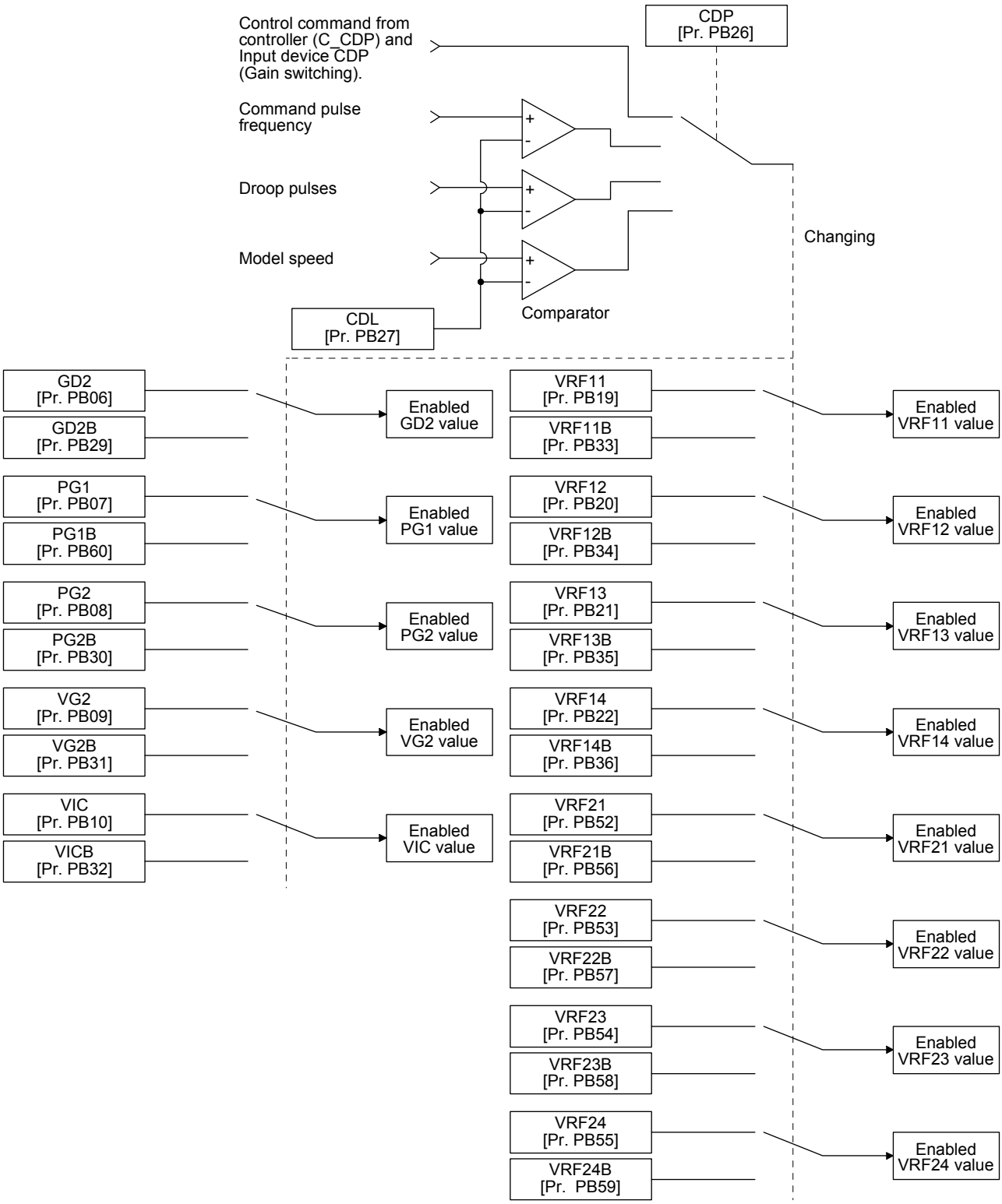

7.2.3 Parameter

When using the gain switching function, always select "Manual mode (_ _ _ 3)" of "Gain adjustment mode selection" in [Pr. PA08 Auto tuning mode]. The gain switching function cannot be used in the auto tuning mode.

(1) Parameter for setting gain switching condition

Parameter	Symbol	Name	Unit	Description
PB26	CDP	Gain switching function		Used to select the changing condition.
PB27	CDL	Gain switching condition	[kpulse/s] /[pulse] /[r/min]	Used to set the changing condition values.
PB28	CDT	Gain switching time constant	[ms]	Set the filter time constant for a gain switch at switching.

(a) [Pr. PB26 Gain switching function]
Used to set the gain switching condition. Select the switching condition in the first to third digits.

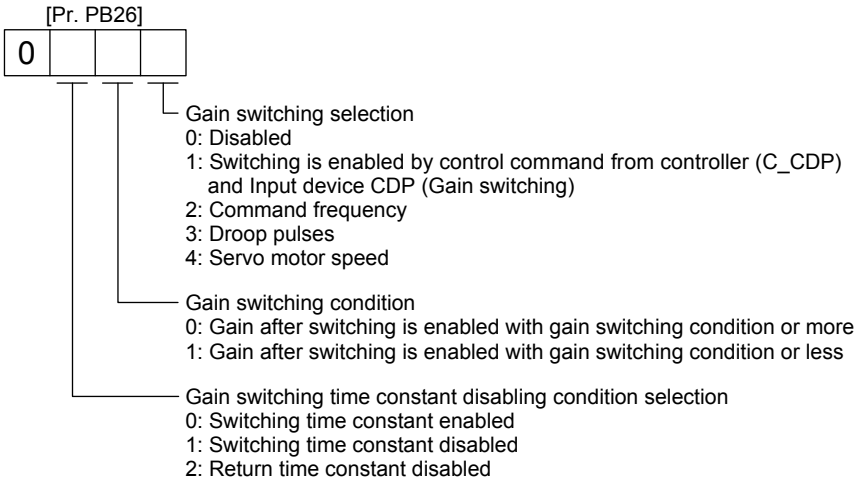

(b) [Pr. PB27 Gain switching condition]
Set a level to switch gains with [Pr. PB27] after you select "Command frequency", "Droop pulses", or "Servo motor speed" with the gain switching selection in [Pr. PB26 Gain switching function].
The setting unit is as follows.

Gain switching condition	Unit
Command frequency	[kpulse/s]
Droop pulses	[pulse]
Servo motor speed	[r/min]/[mm/s]

(c) [Pr. PB28 Gain switching time constant]
You can set the primary delay filter to each gain at gain switching. This parameter is used to suppress shock given to the machine if the gain difference is large at gain switching, for example.

(2) Switchable gain parameter

Loop gain	Before switching			After switching		
	Parameter	Symbol	Name	Parameter	Symbol	Name
Load to motor inertia ratio/load to motor mass ratio	PB06	GD2	Load to motor inertia ratio/load to motor mass ratio	PB29	GD2B	Load to motor inertia ratio/load to motor mass ratio after gain switching
Model loop gain	PB07	PG1	Model loop gain	PB60	PG1B	Model loop gain after gain switching
Position loop gain	PB08	PG2	Position loop gain	PB30	PG2B	Position loop gain after gain switching
Speed loop gain	PB09	VG2	Speed loop gain	PB31	VG2B	Speed loop gain after gain switching
Speed integral compensation	PB10	VIC	Speed integral compensation	PB32	VICB	Speed integral compensation after gain switching
Vibration suppression control 1 - Vibration frequency	PB19	VRF11	Vibration suppression control 1 - Vibration frequency	PB33	VRF11B	Vibration suppression control 1 - Vibration frequency after gain switching
Vibration suppression control 1 - Resonance frequency	PB20	VRF12	Vibration suppression control 1 - Resonance frequency	PB34	VRF12B	Vibration suppression control 1 - Resonance frequency after gain switching
Vibration suppression control 1 - Vibration frequency damping	PB21	VRF13	Vibration suppression control 1 - Vibration frequency damping	PB35	VRF13B	Vibration suppression control 1 - Vibration frequency damping after gain switching
Vibration suppression control 1 - Resonance frequency damping	PB22	VRF14	Vibration suppression control 1 - Resonance frequency damping	PB36	VRF14B	Vibration suppression control 1 - Resonance frequency damping after gain switching
Vibration suppression control 2 - Vibration frequency	PB52	VRF21	Vibration suppression control 2 - Vibration frequency	PB56	VRF21B	Vibration suppression control 2 - Vibration frequency after gain switching
Vibration suppression control 2 - Resonance frequency	PB53	VRF22	Vibration suppression control 2 - Resonance frequency	PB57	VRF22B	Vibration suppression control 2 - Resonance frequency after gain switching
Vibration suppression control 2 - Vibration frequency damping	PB54	VRF23	Vibration suppression control 2 - Vibration frequency damping	PB58	VRF23B	Vibration suppression control 2 - Vibration frequency damping after gain switching
Vibration suppression control 2 - Resonance frequency damping	PB55	VRF24	Vibration suppression control 2 - Resonance frequency damping	PB59	VRF24B	Vibration suppression control 2 - Resonance frequency damping after gain switching

(a) [Pr. PB06] to [Pr. PB10]

These parameters are the same as in ordinary manual adjustment. Gain switching allows the values of load to motor inertia ratio/load to motor mass ratio, model loop gain, position loop gain, speed loop gain, and speed integral compensation to be switched.

(b) [Pr. PB19] to [Pr. PB22]/[Pr. PB52] to [Pr. PB55]

These parameters are the same as in ordinary manual adjustment. Executing gain switching while the servo motor stops, You can change vibration frequency, resonance frequency, vibration frequency damping, and resonance frequency damping.

(c) [Pr. PB29 Load to motor inertia ratio/load to motor mass ratio after gain switching]
Set the load to motor inertia ratio or load to motor mass ratio after gain switching. If the load to motor inertia ratio does not change, set it to the same value as [Pr. PB06 Load to motor inertia ratio/load to motor mass ratio].

(d) [Pr. PB30 Position loop gain after gain switching], [Pr. PB31 Speed loop gain after gain switching], and [Pr. PB32 Speed integral compensation after gain switching]
Set the values of after switching position loop gain, speed loop gain and speed integral compensation.

(e) Vibration suppression control after gain switching ([Pr. PB33] to [Pr. PB36]/[Pr. PB56] to [Pr. PB59]), and [Pr. PB60 Model loop gain after gain switching]
The gain switching vibration suppression control and gain switching model loop gain are used only with control command from the controller.
You can switch the vibration frequency, resonance frequency, vibration frequency damping, resonance frequency damping, and model loop gain of the vibration suppression control 1 and vibration suppression control 2.

7.2.4 Gain switching procedure

This operation will be described by way of setting examples.

(1) When you choose switching by control command from the controller

(a) Setting example

Parameter	Symbol	Name	Setting value	Unit
PB06	GD2	Load to motor inertia ratio/load to motor mass ratio	4.00	[Multiplier]
PB07	PG1	Model loop gain	100	[rad/s]
PB08	PG2	Position loop gain	120	[rad/s]
PB09	VG2	Speed loop gain	3000	[rad/s]
PB10	VIC	Speed integral compensation	20	[ms]
PB19	VRF11	Vibration suppression control 1 - Vibration frequency	50	[Hz]
PB20	VRF12	Vibration suppression control 1 - Resonance frequency	50	[Hz]
PB21	VRF13	Vibration suppression control 1 - Vibration frequency damping	0.20	
PB22	VRF14	Vibration suppression control 1 - Resonance frequency damping	0.20	
PB52	VRF21	Vibration suppression control 2 - Vibration frequency	20	[Hz]
PB53	VRF22	Vibration suppression control 2 - Resonance frequency	20	[Hz]
PB54	VRF23	Vibration suppression control 2 - Vibration frequency damping	0.10	
PB55	VRF24	Vibration suppression control 2 - Resonance frequency damping	0.10	
PB29	GD2B	Load to motor inertia ratio/load to motor mass ratio after gain switching	10.00	[Multiplier]
PB60	PG1B	Model loop gain after gain switching	50	[rad/s]
PB30	PG2B	Position loop gain after gain switching	84	[rad/s]
PB31	VG2B	Speed loop gain after gain switching	4000	[rad/s]
PB32	VICB	Speed integral compensation after gain switching	50	[ms]
PB26	CDP	Gain switching function	0001 (Switch by control command from the controller (C_CDP) and Input device CDP (Gain switching).)	
PB28	CDT	Gain switching time constant	100	[ms]
PB33	VRF11B	Vibration suppression control 1 - Vibration frequency after gain switching	60	[Hz]
PB34	VRF12B	Vibration suppression control 1 - Resonance frequency after gain switching	60	[Hz]
PB35	VRF13B	Vibration suppression control 1 - Vibration frequency damping after gain switching	0.15	
PB36	VRF14B	Vibration suppression control 1 - Resonance frequency damping after gain switching	0.15	
PB56	VRF21B	Vibration suppression control 2 - Vibration frequency after gain switching	30	[Hz]
PB57	VRF22B	Vibration suppression control 2 - Resonance frequency after gain switching	30	[Hz]
PB58	VRF23B	Vibration suppression control 2 - Vibration frequency damping after gain switching	0.05	
PB59	VRF24B	Vibration suppression control 2 - Resonance frequency damping after gain switching	0.05	

(b) Switching timing chart

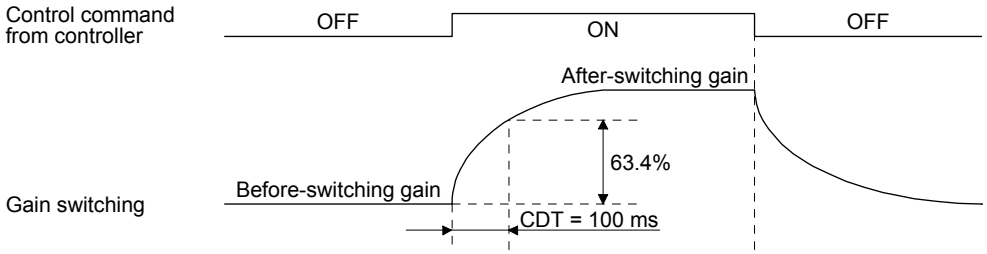

Model loop gain	100	→	50	→	100
Load to motor inertia ratio/load to motor mass ratio	4.00	→	10.00	→	4.00
Position loop gain	120	→	84	→	120
Speed loop gain	3000	→	4000	→	3000
Speed integral compensation	20	→	50	→	20
Vibration suppression control 1 - Vibration frequency	50	→	60	→	50
Vibration suppression control 1 - Resonance frequency	50	→	60	→	50
Vibration suppression control 1 - Vibration frequency damping	0.20	→	0.15	→	0.20
Vibration suppression control 1 - Resonance frequency damping	0.20	→	0.15	→	0.20
Vibration suppression control 2 - Vibration frequency	20	→	30	→	20
Vibration suppression control 2 - Resonance frequency	20	→	30	→	20
Vibration suppression control 2 - Vibration frequency damping	0.10	→	0.05	→	0.10
Vibration suppression control 2 - Resonance frequency damping	0.10	→	0.05	→	0.10

(2) When you choose switching by droop pulses

The vibration suppression control after gain switching and model loop gain after gain switching cannot be used.

(a) Setting example

Parameter	Symbol	Name	Setting value	Unit
PB06	GD2	Load to motor inertia ratio/load to motor mass ratio	4.00	[Multiplier]
PB08	PG2	Position loop gain	120	[rad/s]
PB09	VG2	Speed loop gain	3000	[rad/s]
PB10	VIC	Speed integral compensation	20	[ms]
PB29	GD2B	Load to motor inertia ratio/load to motor mass ratio after gain switching	10.00	[Multiplier]
PB30	PG2B	Position loop gain after gain switching	84	[rad/s]
PB31	VG2B	Speed loop gain after gain switching	4000	[rad/s]
PB32	VICB	Speed integral compensation after gain switching	50	[ms]
PB26	CDP	Gain switching selection	0003 (switching by droop pulses)	
PB27	CDL	Gain switching condition	50	[pulse]
PB28	CDT	Gain switching time constant	100	[ms]

(b) Switching timing chart

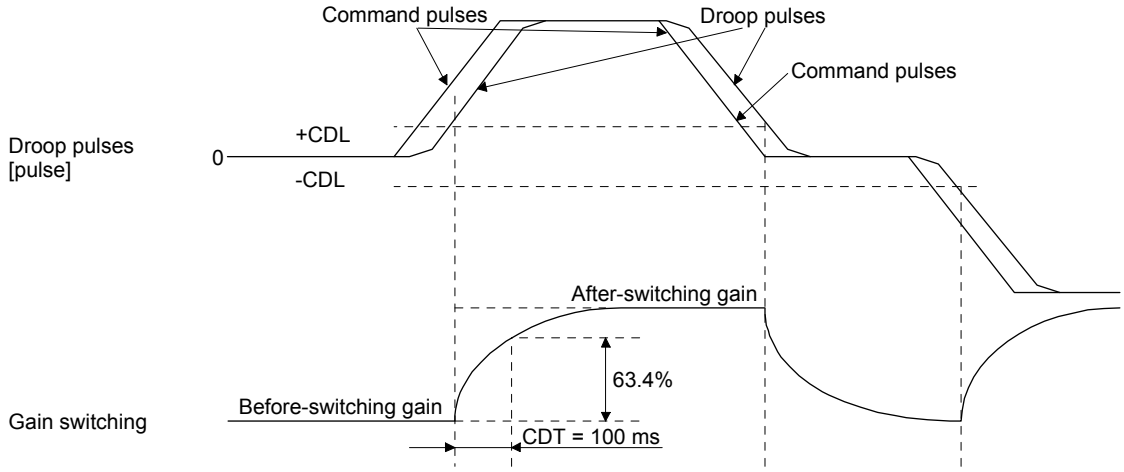

Load to motor inertia ratio/load to motor mass ratio	4.00	→	10.00	→	4.00	→	10.00
Position loop gain	120	→	84	→	120	→	84
Speed loop gain	3000	→	4000	→	3000	→	4000
Speed integral compensation	20	→	50	→	20	→	50

(3) When the gain switching time constant is disabled

(a) Gain switching time constant disabled was selected.

The gain switching time constant is disabled. The time constant is enabled at gain return.

The following example shows for [Pr. PB26 (CDP)] = 0103, [Pr. PB27 (CDL)] = 100 [pulse], and [Pr. PB28 (CDT)] = 100 [ms].

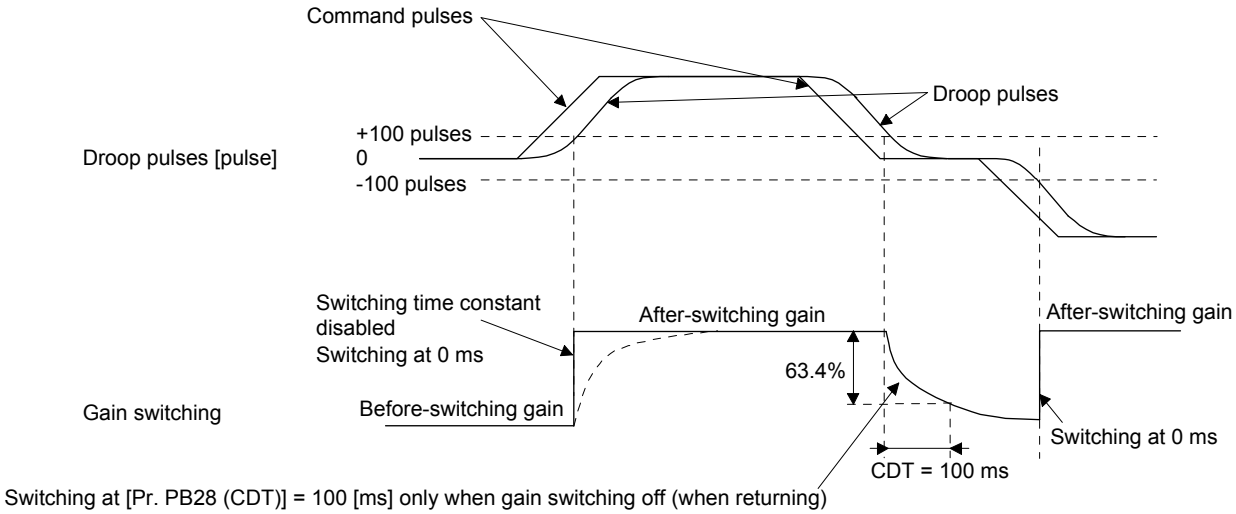

(b) Gain return time constant disabled was selected.
The gain switching time constant is enabled. The time constant is disabled at gain return.
The following example shows for [Pr. PB26 (CDP)] = 0201, [Pr. PB27 (CDL)] = 0, and [Pr. PB28 (CDT)] = 100 [ms].

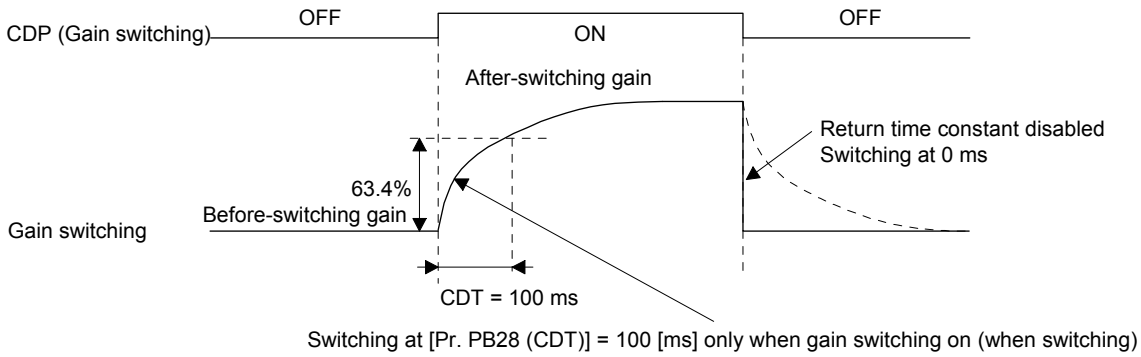

7.3 Tough drive function

POINT
●Set enable/disable of the tough drive function with [Pr. PA20 Tough drive setting]. (Refer to section 5.2.1.)

This function makes the equipment continue operating even under the condition that an alarm occurs.
The tough drive functions are the vibration tough drive and the instantaneous power failure tough drive.

7.3.1 Vibration tough drive function

This function prevents vibration by resetting a filter instantaneously when machine resonance occurs due to varied vibration frequency caused by machine aging.
To reset the machine resonance suppression filters with the function, [Pr. PB13 Machine resonance suppression filter 1] and [Pr. PB15 Machine resonance suppression filter 2] should be set in advance.
Set [Pr. PB13] and [Pr. PB15] as follows.

(1) One-touch tuning execution (section 6.1)

(2) Manual setting (section 4.2.2)

The vibration tough drive function operates when a detected machine resonance frequency is within ±30% for a value set in [Pr. PB13 Machine resonance suppression filter 1] or [Pr. PB15 Machine resonance suppression filter 2].
To set a detection level of the function, set sensitivity in [Pr. PF23 Vibration tough drive - Oscillation detection level].

POINT
●Resetting [Pr. PB13] and [Pr. PB15] by the vibration tough drive function is performed constantly. However, the number of write times to the EEPROM is limited to once per hour. ●The vibration tough drive function does not reset [Pr. PB46 Machine resonance suppression filter 3], [Pr. PB48 Machine resonance suppression filter 4], and [Pr. PB50 Machine resonance suppression filter 5]. ●The vibration tough drive function does not detect a vibration of 100 Hz or less.

The following shows the function block diagram of the vibration tough drive function.
The function detects machine resonance frequency and compare it with [Pr. PB13] and [Pr. PB15], and reset a machine resonance frequency of a parameter whose set value is closer.

Filter	Setting parameter	Precaution	Parameter that is reset with vibration tough drive function
Machine resonance suppression filter 1	PB01/PB13/PB14	The filter can be set automatically with "Filter tuning mode selection" in [Pr. PB01].	PB13
Machine resonance suppression filter 2	PB15/PB16		PB15
Machine resonance suppression filter 3	PB46/PB47		
Machine resonance suppression filter 4	PB48/PB49	Enabling the machine resonance suppression filter 4 disables the shaft resonance suppression filter. Using the shaft resonance suppression filter is recommended because it is adjusted properly depending on the usage situation. The shaft resonance suppression filter is enabled for the initial setting.	
Machine resonance suppression filter 5	PB50/PB51	Enabling the robust filter disables the machine resonance suppression filter 5. The robust filter is disabled for the initial setting.	

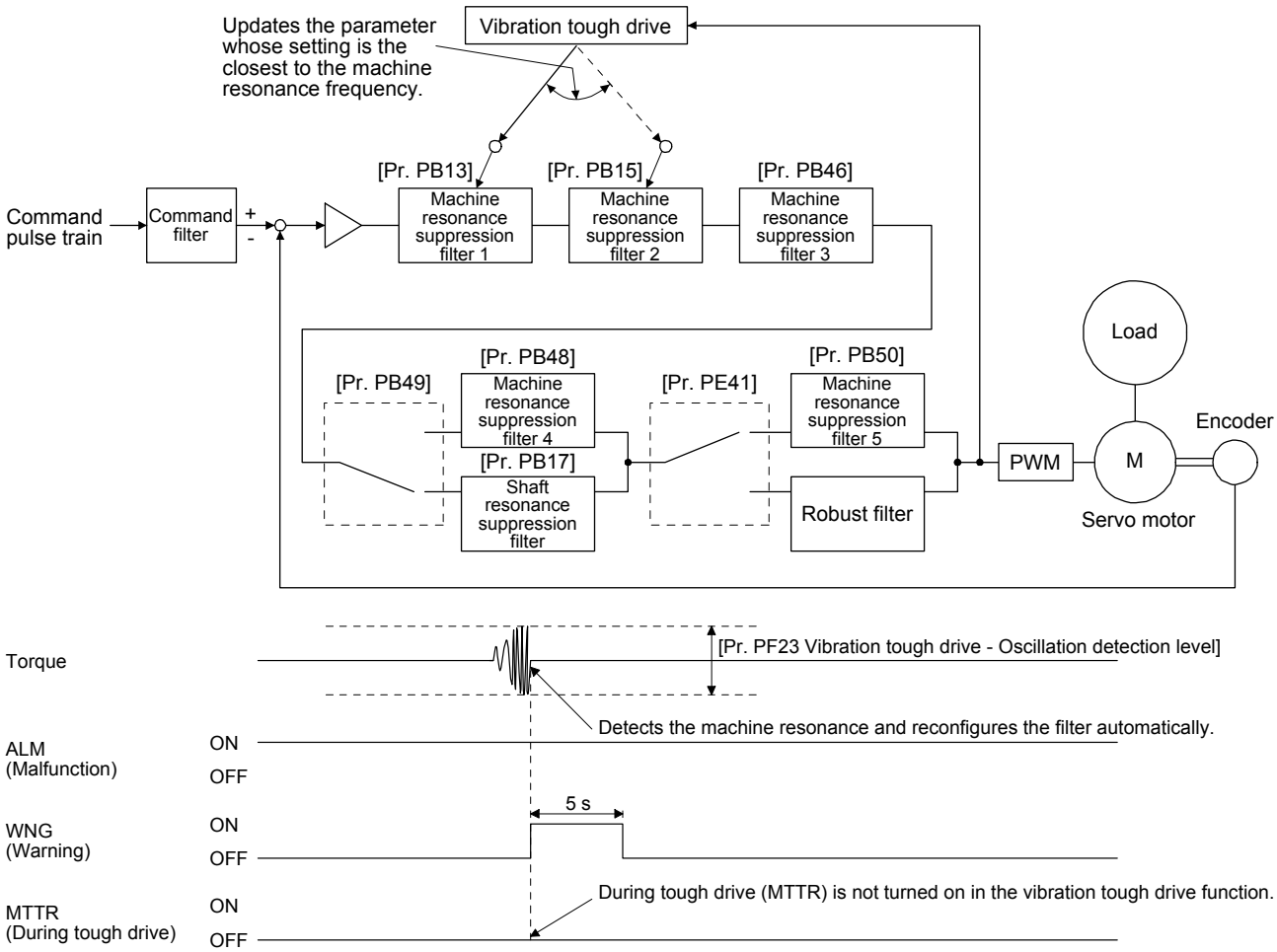

7.3.2 Instantaneous power failure tough drive function

The instantaneous power failure tough drive function avoids [AL. 10 Undervoltage] even when an instantaneous power failure occurs during operation. When the instantaneous power failure tough drive activates, the function will increase the tolerance against instantaneous power failure using the electrical energy charged in the capacitor in the servo amplifier and will change an alarm level of [AL. 10 Undervoltage] simultaneously. The [AL. 10.1 Voltage drop in the control circuit power] detection time for the control circuit power supply can be changed by [Pr. PF25 SEMI-F47 function - Instantaneous power failure detection time]. In addition, [AL. 10.2 Voltage drop in the main circuit power] detection level for the bus voltage is changed automatically.

POINT

- MBR (Electromagnetic brake interlock) will not turn off during the instantaneous power failure tough drive.
- When selecting "Enabled (_ _ _ 1)" for "Torque limit function selection at instantaneous power failure" in [Pr. PA26], if an instantaneous power failure occurs during operation, you can save electric energy charged in the capacitor in the servo amplifier by limiting torque at acceleration. You can also delay the time until the occurrence of [AL. 10.2 Voltage drop in the main circuit power]. Doing this will enable you to set a longer time in [Pr. PF25 SEMI-F47 function - Instantaneous power failure detection time].
- When the load of instantaneous power failure is large, [AL. 10.2] caused by the bus voltage drop may occur regardless of the set value of [Pr. PF25 SEMI-F47 function - Instantaneous power failure detection time].
- The external dynamic brake cannot be used for compliance with SEMI-F47 standard. Do not assign DB (Dynamic brake interlock) in [Pr. PD07] to [Pr. PD09]. Failure to do so will cause the servo amplifier to become servo-off when an instantaneous power failure occurs.
- To comply with SEMI-F47 standard, it is unnecessary to change the initial value (200 ms) in [Pr. PF25 SEMI-F47 function - Instantaneous power failure detection time]. When the instantaneous power failure time exceeds 200 ms, and the instantaneous power failure voltage is less than 70% of the rated input voltage, the power may be normally turned off even if a value larger than 200 ms is set in the parameter.

(1) Instantaneous power failure time of the control circuit power supply > [Pr. PF25 SEMI-F47 function - Instantaneous power failure detection time]

The alarm occurs when the instantaneous power failure time of the control circuit power supply exceeds [Pr. PF25 SEMI-F47 function - Instantaneous power failure detection time].

MTTR (During tough drive) turns on after detecting the instantaneous power failure.

MBR (Electromagnetic brake interlock) turns off when the alarm occurs.

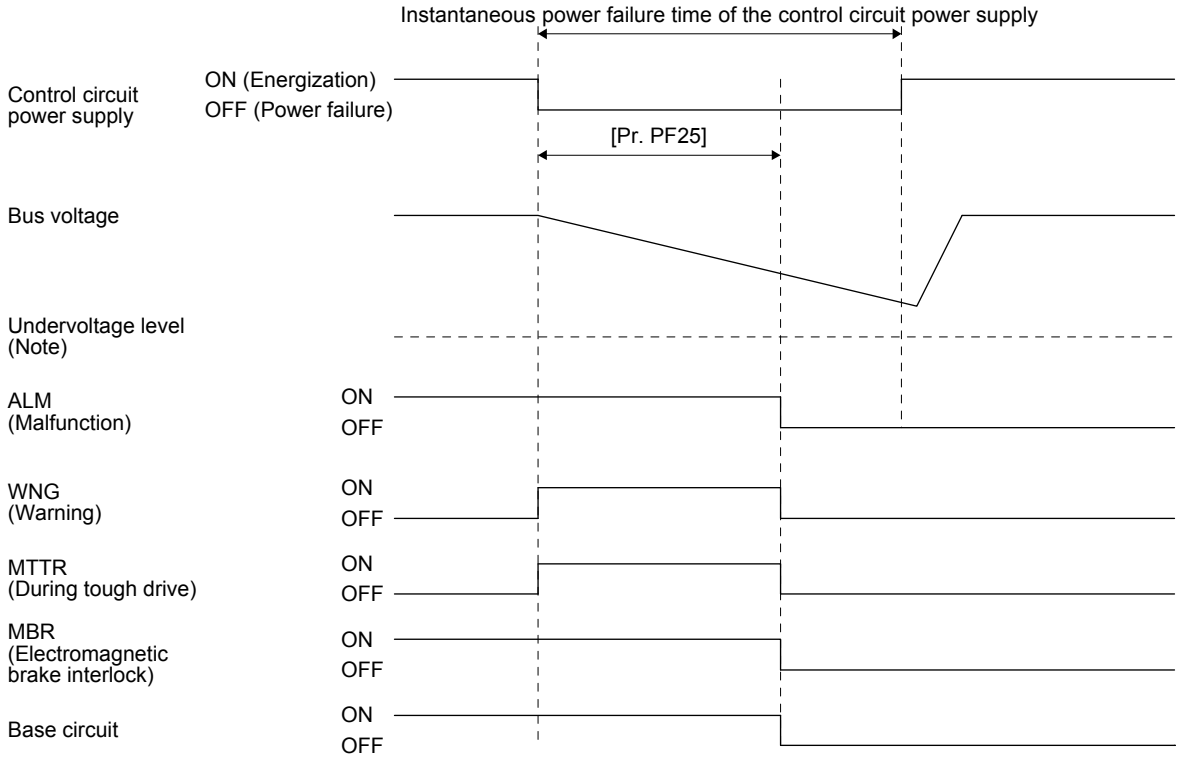

Note. Refer to table 7.1 for the undervoltage level.

(2) Instantaneous power failure time of the control circuit power supply < [Pr. PF25 SEMI-F47 function - Instantaneous power failure detection time]
Operation status differs depending on how bus voltage decrease.

(a) When the bus voltage decrease lower than Undervoltage level within the instantaneous power failure time of the control circuit power supply
[AL. 10 Undervoltage] occurs when the bus voltage decrease lower than Undervoltage level regardless of the enabled instantaneous power failure tough drive.

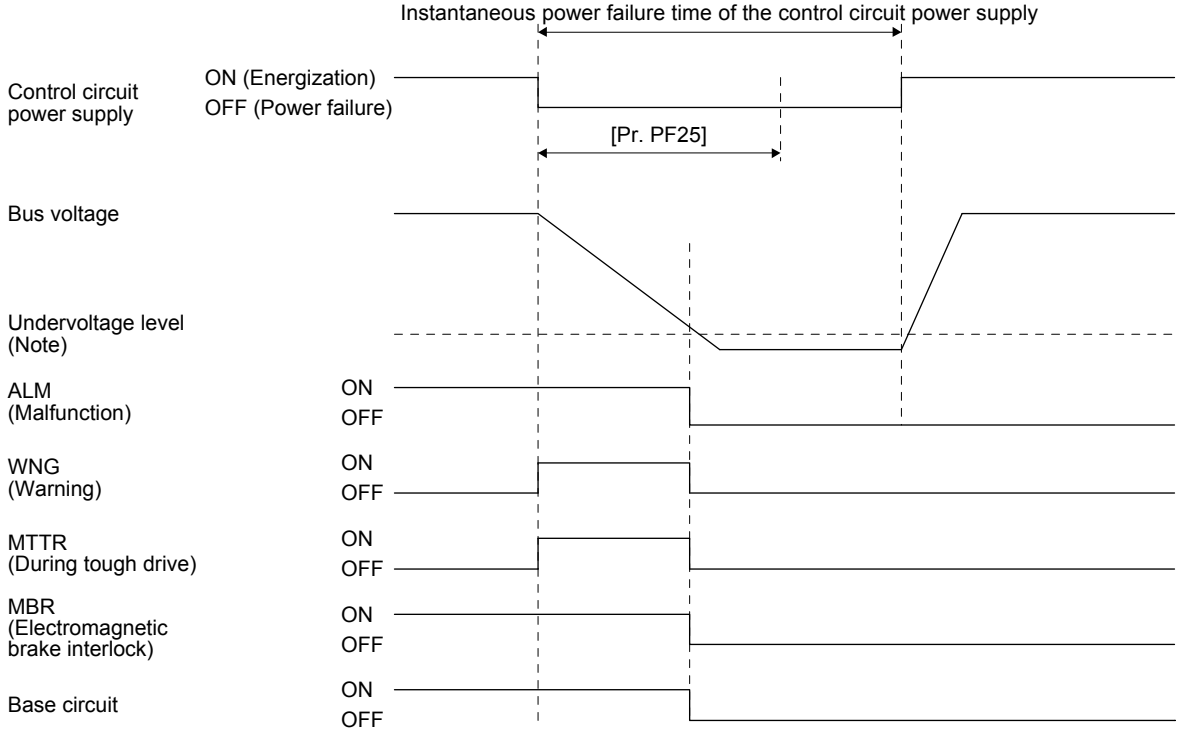

Note. Refer to table 7.1 for the undervoltage level.

(b) When the bus voltage does not decrease lower than Undervoltage level within the instantaneous power failure time of the control circuit power supply
The operation continues without alarming.

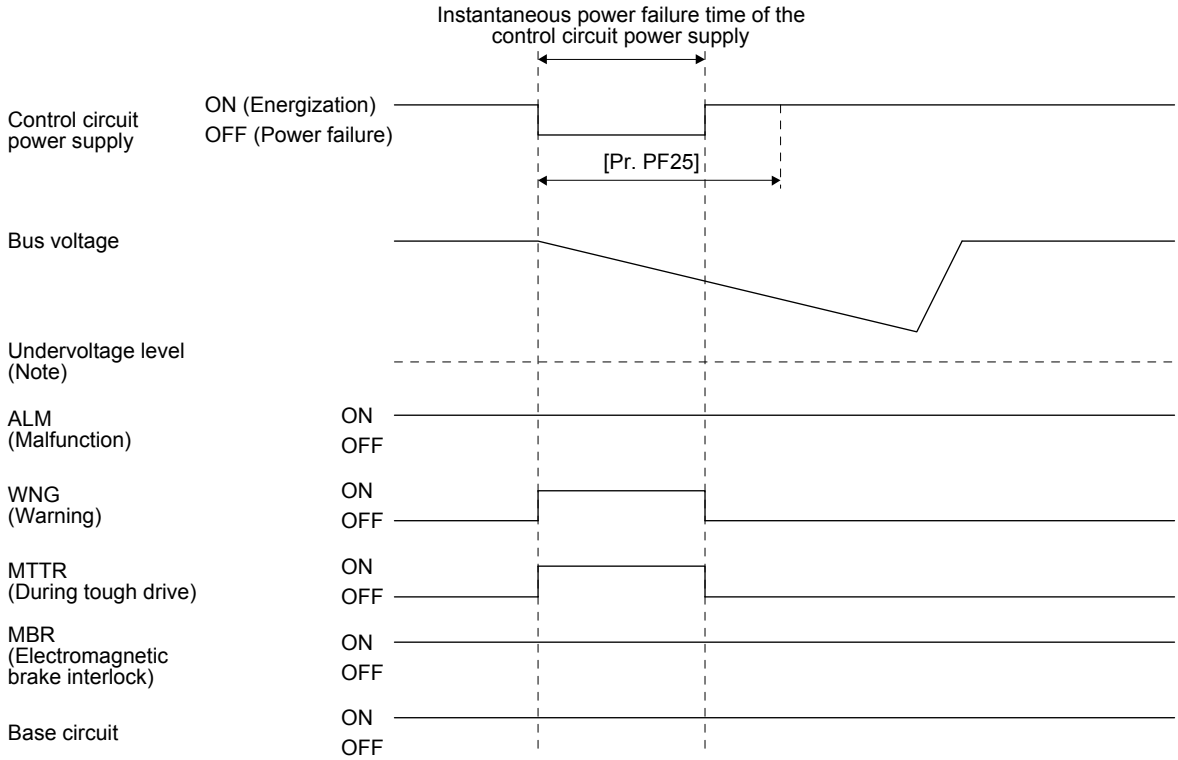

Note. Refer to table 7.1 for the undervoltage level.

7.4 Compliance with SEMI-F47 standard

POINT

- The control circuit power supply of the servo amplifier can be possible to comply with SEMI-F47 standard. However, a back-up capacitor may be necessary for instantaneous power failure in the main circuit power supply depending on the power supply impedance and operating situation.
- Use a 3-phase for the input power supply of the servo amplifier. Using a 1-phase 100 V AC/200 V AC for the input power supply will not comply with SEMI-F47 standard.
- The external dynamic brake cannot be used for compliance with SEMI-F47 standard. Do not assign DB (Dynamic brake interlock) in [Pr. PD07] to [Pr. PD09]. Failure to do so will cause the servo amplifier to become servo-off when an instantaneous power failure occurs.
- Be sure to perform actual machine tests and detail checks for power supply instantaneous power failure of SEMI-F47 standard with your equipment.

The following explains the compliance with "SEMI-F47 semiconductor process equipment voltage sag immunity test" of MR-J4 series.
This function enables to avoid triggering [AL. 10 Undervoltage] using the electrical energy charged in the capacitor in case that an instantaneous power failure occurs during operation.

(1) Parameter setting
Setting [Pr. PA20] and [Pr. PF25] as follows will enable SEMI-F47 function.

Parameter	Setting value	Description
PA20	_ 1 _ _	Enable SEMI-F47 function selection.
PF25	200	Set the time [ms] of the [AL. 10.1 Voltage drop in the control circuit power] occurrence.

Enabling SEMI-F47 function will change operation as follows.

(a) The voltage will drop in the control circuit power with "Rated voltage × 50% or less". 200 ms later, [AL. 10.1 Voltage drop in the control circuit power] will occur.

(b) [AL. 10.2 Voltage drop in the main circuit power] will occur when bus voltage is as follows.

Table 7.1 Voltages which trigger [AL. 10.2 Voltage drop in the main circuit power]

Servo amplifier	Bus voltage which triggers alarm
MR-J4-10TM to MR-J4-700TM	158 V DC
MR-J4-11KTM to MR-J4-22KTM	200 V DC
MR-J4-60TM4 to MR-J4-22KTM4	380 V DC

(c) MBR (Electromagnetic brake interlock) will turn off when [AL. 10.1 Voltage drop in the control circuit power] occurs.

(2) Requirements conditions of SEMI-F47 standard
Table 7.2 shows the permissible time of instantaneous power failure for instantaneous power failure of SEMI-F47 standard.

Table 7.2 Requirements conditions of SEMI-F47 standard

Instantaneous power failure voltage	Permissible time of instantaneous power failure [s]
Rated voltage × 80%	1
Rated voltage × 70%	0.5
Rated voltage × 50%	0.2

(3) Calculation of tolerance against instantaneous power failure
Table 7.3 shows tolerance against instantaneous power failure when instantaneous power failure voltage is "rated voltage × 50%" and instantaneous power failure time is 200 ms.

Table 7.3 Tolerance against instantaneous power failure
(instantaneous power failure voltage = rated voltage × 50%,
instantaneous power failure time = 200 ms)

Servo amplifier	Instantaneous maximum output [W]	Tolerance against instantaneous power failure [W] (voltage drop between lines)
MR-J4-10TM	350	250
MR-J4-20TM	700	420
MR-J4-40TM	1400	630
MR-J4-60TM	2100	410
MR-J4-70TM	2625	1150
MR-J4-100TM	3000	1190
MR-J4-200TM	5400	2040
MR-J4-350TM	10500	2600
MR-J4-500TM	15000	4100
MR-J4-700TM	21000	5900
MR-J4-11KTM	40000	2600
MR-J4-15KTM	50000	3500
MR-J4-22KTM	56000	4300
MR-J4-60TM4	1900	190
MR-J4-100TM4	3500	200
MR-J4-200TM4	5400	350
MR-J4-350TM4	10500	730
MR-J4-500TM4	15000	890
MR-J4-700TM4	21000	1500
MR-J4-11KTM4	40000	2400
MR-J4-15KTM4	50000	3200
MR-J4-22KTM4	56000	4200

Instantaneous maximum output means power which servo amplifier can output in maximum torque at rated speed. You can examine margins to compare the values of following conditions and instantaneous maximum output.
Even if driving at maximum torque with low speed in actual operation, the motor will not drive with the maximum output. This can be handled as a margin.
The following shows the conditions of tolerance against instantaneous power failure.

(a) Delta connection
For the 3-phase (L1/L2/L3) delta connection, an instantaneous power failure occurs in the voltage between a pair of lines (e.g. between L1 and L2) among voltages between three pairs of lines (between L1 and L2, L2 and L3, or L3 and L1).

(b) Star connection
For the 3-phase (L1/L2/L3/neutral point N) star connection, an instantaneous power failure occurs in the voltage between a pair of lines (e.g. between L1 and N) among voltages at six locations, between three pairs of lines (between L1 and L2, L2 and L3, or L3 and L1) and between one of the lines and the neutral point (between L1 and N, L2 and N, or L3 and N).

7.5 Model adaptive control disabled

POINT

- Change the parameters while the servo motor stops.
- When setting auto tuning response ([Pr. PA09]), change the setting value one by one to adjust it while checking operation status of the servo motor.

(1) Summary

The servo amplifier has a model adaptive control. The servo amplifier has a virtual motor model and drives the servo motor following the output of the motor model in the model adaptive control. At model adaptive control disabled, the servo amplifier drives the motor with PID control without using the model adaptive control.

The following shows the available parameters at model adaptive control disabled.

Parameter	Symbol	Name
PB08	PG2	Position loop gain
PB09	VG2	Speed loop gain
PB10	VIC	Speed integral compensation

(2) Parameter setting

Set [Pr. PB25] to "_ _ _ 2".

(3) Restrictions

The following functions are not available at model adaptive control disabled.

Function	Explanation
Forced stop deceleration function ([Pr. PA04])	Disabling the model adaptive control while the forced stop deceleration function is enabled, [AL. 37] will occur. The forced stop deceleration function is enabled at factory setting. Set [Pr. PA04] to "0 _ _ _" (Forced stop deceleration function disabled).
Vibration suppression control 1 ([Pr. PB02]/[Pr. PB19]/[Pr. PB20]) Vibration suppression control 2 ([Pr. PB02]/[Pr. PB52]/[Pr. PB53])	The vibration suppression control uses the model adaptive control. Disabling the model adaptive control will also disable the vibration suppression control.
Overshoot amount compensation ([Pr. PB12])	The overshoot amount compensation uses data used by the model adaptive control. Disabling the model adaptive control will also disable the overshoot amount compensation.
Super trace control ([Pr. PA22])	The super trace control uses the model adaptive control. Disabling the model adaptive control will also disable the super trace control.

7.6 Lost motion compensation function

POINT
●The lost motion compensation function is enabled only in the position mode.

The lost motion compensation function corrects response delays (caused by a non-sensitive band due to friction, twist, expansion, and backlash) caused when the machine travel direction is reversed. This function contributes to improvement for protrusions that occur at a quadrant change and streaks that occur at a quadrant change during circular cutting.
This function is effective when a high follow-up performance is required such as drawing an arc with an X-Y table.

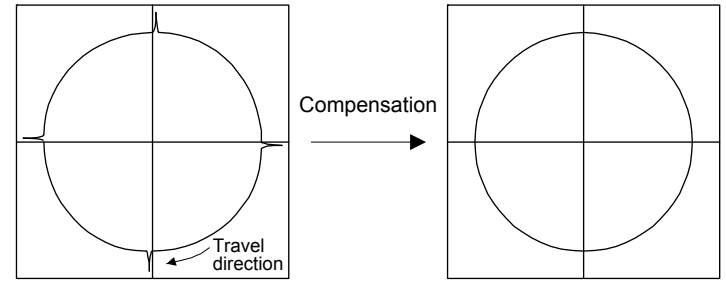

The locus before compensation　　The locus after compensation

(1) Parameter setting
Setting [Pr. PE44] to [Pr. PE50] enables the lost motion compensation function.

(a) Lost motion compensation function selection ([Pr. PE48])
Select the lost motion compensation function.

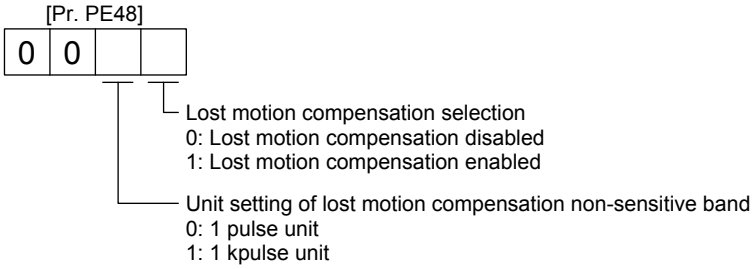

(b) Lost motion compensation ([Pr. PE44]/[Pr. PE45])
Set the same value for the lost motion compensation for each of when the forward rotation switches to the reverse rotation and when the reverse rotation switches to the forward rotation. When the heights of protrusions differ depending on the travel direction, set the different compensation for each travel direction. Set a value twice the usual friction torque and adjust the value while checking protrusions.

(c) Torque offset ([Pr. PE47])
For a vertical axis, unbalanced torque occurs due to the gravity. Although setting the torque offset is usually unnecessary, setting unbalanced torque of a machine as a torque offset cancels the unbalanced torque. The torque offset does not need to be set for a machine not generating unbalanced torque. The torque offset cannot be used for linear servo motors and direct drive motors. Set 0.00%.

(d) Lost motion compensation timing ([Pr. PE49])
You can set the delay time of the lost motion compensation start timing with this parameter. When a protrusion occurs belatedly, set the lost motion compensation timing corresponding to the protrusion occurrence timing.

(e) Lost motion compensation non-sensitive band ([Pr. PE50])
When the travel direction reverses frequently around the zero speed, unnecessary lost motion compensation is triggered by the travel direction switching. By setting the lost motion compensation non-sensitive band, the speed is recognized as 0 when the fluctuation of the droop pulse is the setting value or less. This prevents unnecessary lost motion compensation.
When the value of this parameter is changed, the compensation timing is changed. Adjust the value of Lost motion compensation timing ([Pr. PE49]).

(f) Lost motion filter setting ([Pr. PE46])
Changing the value of this parameter is usually unnecessary. When a value other than 0.0 ms is set in this parameter, the high-pass filter output value of the set time constant is applied to the compensation and lost motion compensation continues.

(2) Adjustment procedure of the lost motion compensation function

(a) Measuring the load current
Measure the load currents during the forward direction feed and reverse direction feed with MR Configurator2.

(b) Setting the lost motion compensation
Calculate the friction torque from the measurement result of (2) (a) in this section and set a value twice the friction torque in [Pr. PE44] and [Pr. PE45] as lost motion compensation.

$$\text{Friction torque [\%]} = \frac{\left|(\text{load current during feed in the forward rotation direction [\%]}) - (\text{load current during feed in the reverse rotation direction [\%]})\right|}{2}$$

(c) Checking protrusions
Drive the servo motor and check that the protrusions are corrected.

(d) Adjusting the lost motion compensation

When protrusions still occur, the compensation is insufficient. Increase the lost motion compensation by approximately 0.5% until the protrusions are eliminated. When notches occur, the compensation is excessive. Decrease the lost motion compensation by approximately 0.5% until the notches are eliminated. Different values can be set as the compensation for each of when the forward rotation (CCW) switches to the reverse rotation (CW) and when the reverse rotation (CW) switches to the forward rotation (CCW).

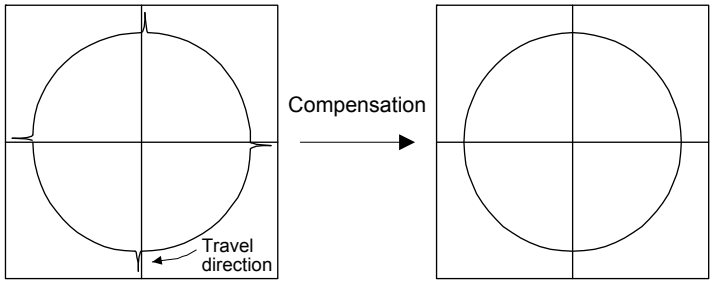

The locus before compensation　　The locus after compensation

(e) Adjusting the lost motion compensation timing

When the machine has low rigidity, the speed loop gain is set lower than the standard setting value, or the servo motor is rotating at high speed, quadrant projections may occur behind the quadrant change points. In this case, you can suppress the quadrant projections by delaying the lost motion compensation timing with [Pr. PE49 Lost motion compensation timing]. Increase the setting value of [Pr. PE49] from 0 ms (Initial value) by approximately 0.5 ms to adjust the compensation timing.

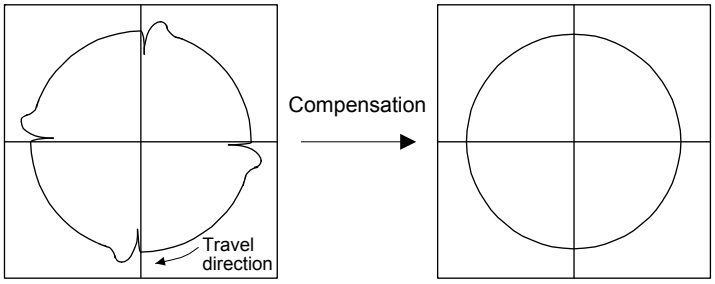

Before timing delay compensation　　After timing delay compensation

(f) Adjusting the lost motion compensation non-sensitive band

When the lost motion is compensated twice around a quadrant change point, set [Pr. PE50 Lost motion compensation non-sensitive band]. Increase the setting value so that the lost motion is not compensated twice. Setting [Pr. PE50] may change the compensation timing. Adjust the lost motion compensation timing of (2) (e) in this section.

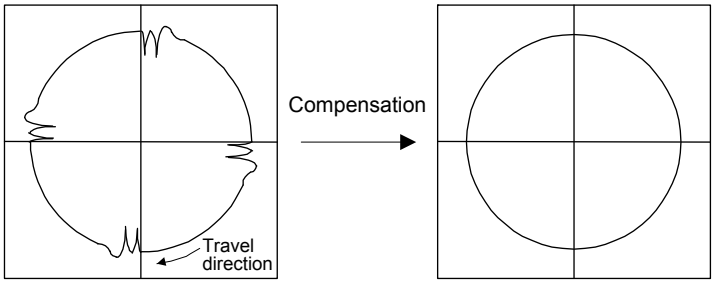

Before timing delay compensation　　After timing delay compensation

7.7 Super trace control

(1) Summary

In the normal position control, droop pulses are generated against the position control command from the controller. Using the feed forward gain sets droop pulses at a constant speed to almost 0. However, droop pulses generated during acceleration/deceleration cannot be suppressed.

With the ideal model in the servo amplifier, the super trace control enables to set constant speed and uniform acceleration/deceleration droop pulses to almost 0 that cannot be coped with by the feed forward gain.

Control	Position command (the same command)	Droop pulses
Normal control	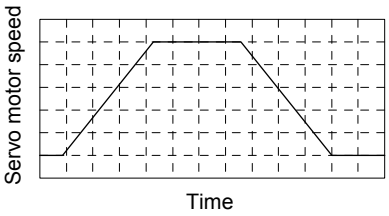	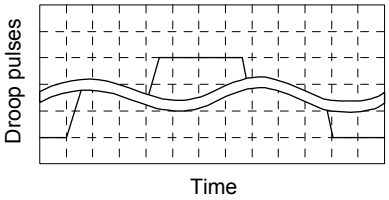 Droop pulses are always generated.
Feed forward gain	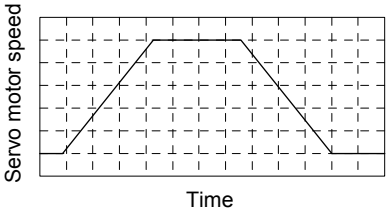	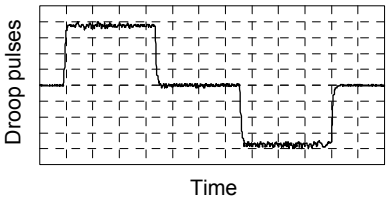 Droop pulses are generated during acceleration/ deceleration.
Super trace control	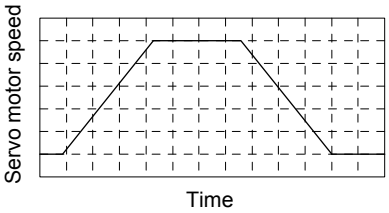	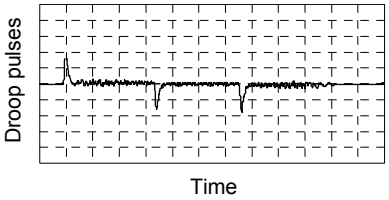 Droop pulses are almost 0 including the time of acceleration or deceleration.

(2) Adjustment procedure

POINT

- In the super trace control, droop pulses are near 0 during the servo motor control. Thus, the normal INP (In-position) may always be turned on. Be sure to set "INP (In-position) on condition selection" in [Pr. PD13] to " _ 1 _ _".
- When you use the super trace control, it is recommended that the acceleration time constant up to the rated speed be set to 1 s or more.

The following shows the adjustment procedure.

Step	Operation
1	Execute the gain adjustment with one-touch tuning, auto tuning, etc. Refer to chapter 6 for details.
2	Change the setting of auto tuning mode to the manual mode ([Pr. PA08]: _ _ _ 3).
3	Change the setting of feed forward gain ([Pr. PB04]), and adjust that droop pulses will be 0 at a constant speed.
4	Set the setting of INP (In-position) on condition selection ([Pr. PD13]) to " _ 1 _ _".
5	Enable the super trace control. ([Pr. PA22]: _ _ 2 _)
6	Change the setting of model loop gain ([Pr. PB07]), and adjust droop pulses during acceleration/deceleration.

8. TROUBLESHOOTING

POINT
●This chapter explains the details of alarms and warnings exclusively for the MR-J4-_TM_. For any other alarms and warnings, refer to [GF] and [Others] in the MELSERVO-J4 Servo Amplifier Instruction Manual (Troubleshooting). ●As soon as an alarm occurs, make the servo-off status and interrupt the main circuit power. ●[AL. 37 Parameter error] and warnings (except [AL. F0 Tough drive warning]) are not recorded in the alarm history.

When an error occurs during operation, the corresponding alarm or warning is displayed. If an alarm or warning is displayed, refer to section 8.4, and "MELSERVO-J4 Servo Amplifier Instruction Manual (Troubleshooting)" to remove the failure. When an alarm occurs, ALM (Malfunction) will turn off.

8.1 Explanations of the lists

(1) No./Name/Detail No./Detail name
Indicates the alarm or warning No., name, detail No., and detail name.

(2) Stop method
For the alarms and warnings in which "SD" is written in the stop method column, the servo motor stops with the dynamic brake after forced stop deceleration. For the alarms and warnings in which "DB" or "EDB" is written in the stop method column, the servo motor stops with the dynamic brake without forced stop deceleration.

(3) Alarm deactivation
After the alarm cause has been removed, the alarm can be deactivated in any of the methods marked ○ in the alarm deactivation column. Warnings are automatically canceled after the cause of occurrence is removed. Alarms are deactivated by alarm reset, communication reset (network), or power cycling.

Alarm deactivation	Explanation
Alarm reset	1. Error reset command from the controller 2. Click "Occurring Alarm Reset" in the "Alarm Display" window of MR Configurator2.
Communication reset (Network)	1. Disconnect the computer from the network, and connect it again. For details of the disconnection methods, refer to respective communication method manuals of "MR-J4-_TM_ Servo Amplifier Instruction Manual". 2. After the network communication from the controller has been shifted to the initial state, connect it again.
Cycling the power	Turning the power off and then turning it on again.

8.2 Alarm list

	No.	Name	Detail No.	Detail name	Stop method (Note 2, 3)	Alarm deactivation		
						Alarm reset	Communication reset	Cycling the power
Alarm	10	Undervoltage	10.1	Voltage drop in the control circuit power	EDB	○	○	○
			10.2	Voltage drop in the main circuit power	SD	○	○	○
	11	Switch setting error	11.1	Axis number setting error/ Station number setting error	DB			○
			11.2	Disabling control axis setting error	DB			○
	12	Memory error 1 (RAM)	12.1	RAM error 1	DB			○
			12.2	RAM error 2	DB			○
			12.3	RAM error 3	DB			○
			12.4	RAM error 4	DB			○
			12.5	RAM error 5	DB			○
			12.6	RAM error 6	DB			○
	13	Clock error	13.1	Clock error 1	DB			○
			13.2	Clock error 2	DB			○
	14	Control process error	14.1	Control process error 1	DB			○
			14.2	Control process error 2	DB			○
			14.3	Control process error 3	DB			○
			14.4	Control process error 4	DB			○
			14.5	Control process error 5	DB			○
			14.6	Control process error 6	DB			○
			14.7	Control process error 7	DB			○
			14.8	Control process error 8	DB			○
			14.9	Control process error 9	DB			○
			14.A	Control process error 10	DB			○
			14.B	Control process error 11	DB			○
	15	Memory error 2 (EEP-ROM)	15.1	EEP-ROM error at power on	DB			○
			15.2	EEP-ROM error during operation	DB			○
			15.4	Home position information read error	DB			○
	16	Encoder initial communication error 1	16.1	Encoder initial communication - Receive data error 1	DB			○
			16.2	Encoder initial communication - Receive data error 2	DB			○
			16.3	Encoder initial communication - Receive data error 3	DB			○
			16.4	Encoder initial communication - Encoder malfunction (Note 6)	DB			○
			16.5	Encoder initial communication - Transmission data error 1	DB			○
			16.6	Encoder initial communication - Transmission data error 2	DB			○
			16.7	Encoder initial communication - Transmission data error 3	DB			○
			16.8	Encoder initial communication - Incompatible encoder (Note 6)	DB			○
			16.A	Encoder initial communication - Process error 1	DB			○
			16.B	Encoder initial communication - Process error 2	DB			○
			16.C	Encoder initial communication - Process error 3	DB			○
			16.D	Encoder initial communication - Process error 4	DB			○
			16.E	Encoder initial communication - Process error 5	DB			○
			16.F	Encoder initial communication - Process error 6	DB			○

	No.	Name	Detail No.	Detail name	Stop method (Note 2, 3)	Alarm deactivation		
						Alarm reset	Communication reset	Cycling the power
Alarm	17	Board error	17.1	Board error 1	DB			○
			17.3	Board error 2	DB			○
			17.4	Board error 3	DB			○
			17.5	Board error 4	DB			○
			17.6	Board error 5	DB			○
			17.7	Board error 7	DB			○
			17.8	Board error 6 (Note 6)	EDB			○
			17.9	Board error 8	DB			○
	19	Memory error 3 (Flash-ROM)	19.1	Flash-ROM error 1	DB			○
			19.2	Flash-ROM error 2	DB			○
			19.3	Flash-ROM error 3	DB			○
	1A	Servo motor combination error	1A.1	Servo motor combination error 1	DB			○
			1A.2	Servo motor control mode combination error	DB			○
			1A.4	Servo motor combination error 2	DB			○
	1B	Converter error	1B.1	Converter unit error	DB			○
	1E	Encoder initial communication error 2	1E.1	Encoder malfunction	DB			○
			1E.2	Load-side encoder malfunction	DB			○
	1F	Encoder initial communication error 3	1F.1	Incompatible encoder	DB			○
			1F.2	Incompatible load-side encoder	DB			○
	20	Encoder normal communication error 1	20.1	Encoder normal communication - Receive data error 1	EDB			○
			20.2	Encoder normal communication - Receive data error 2	EDB			○
			20.3	Encoder normal communication - Receive data error 3	EDB			○
			20.5	Encoder normal communication - Transmission data error 1	EDB			○
			20.6	Encoder normal communication - Transmission data error 2	EDB			○
			20.7	Encoder normal communication - Transmission data error 3	EDB			○
			20.9	Encoder normal communication - Receive data error 4	EDB			○
			20.A	Encoder normal communication - Receive data error 5	EDB			○
	21	Encoder normal communication error 2	21.1	Encoder data error 1	EDB			○
			21.2	Encoder data update error	EDB			○
			21.3	Encoder data waveform error	EDB			○
			21.4	Encoder non-signal error	EDB			○
			21.5	Encoder hardware error 1	EDB			○
			21.6	Encoder hardware error 2	EDB			○
			21.9	Encoder data error 2	EDB			○
	24	Main circuit error	24.1	Ground fault detected by hardware detection circuit	DB			○
			24.2	Ground fault detected by software detection function	DB	○	○	○
	25	Absolute position erased	25.1	Servo motor encoder - Absolute position erased	DB			○
			25.2	Scale measurement encoder - Absolute position erased	DB			○

	No.	Name	Detail No.	Detail name	Stop method (Note 2, 3)	Alarm deactivation		
						Alarm reset	Communication reset	Cycling the power
Alarm	27	Initial magnetic pole detection error	27.1	Initial magnetic pole detection - Abnormal termination	DB	○		○
			27.2	Initial magnetic pole detection - Time out error	DB	○		○
			27.3	Initial magnetic pole detection - Limit switch error	DB	○		○
			27.4	Initial magnetic pole detection - Estimated error	DB	○		○
			27.5	Initial magnetic pole detection - Position deviation error	DB	○		○
			27.6	Initial magnetic pole detection - Speed deviation error	DB	○		○
			27.7	Initial magnetic pole detection - Current error	DB	○		○
	28	Linear encoder error 2	28.1	Linear encoder - Environment error	EDB			○
	2A	Linear encoder error 1	2A.1	Linear encoder error 1-1	EDB			○
			2A.2	Linear encoder error 1-2	EDB			○
			2A.3	Linear encoder error 1-3	EDB			○
			2A.4	Linear encoder error 1-4	EDB			○
			2A.5	Linear encoder error 1-5	EDB			○
			2A.6	Linear encoder error 1-6	EDB			○
			2A.7	Linear encoder error 1-7	EDB			○
			2A.8	Linear encoder error 1-8	EDB			○
	2B	Encoder counter error	2B.1	Encoder counter error 1	EDB			○
			2B.2	Encoder counter error 2	EDB			○
	30	Regenerative error	30.1	Regeneration heat error	DB	○ (Note 1)	○ (Note 1)	○ (Note 1)
			30.2	Regeneration signal error	DB	○ (Note 1)	○ (Note 1)	○ (Note 1)
			30.3	Regeneration feedback signal error	DB	○ (Note 1)	○ (Note 1)	○ (Note 1)
	31	Overspeed	31.1	Abnormal motor speed	SD	○	○	○
	32	Overcurrent	32.1	Overcurrent detected at hardware detection circuit (during operation)	DB			○
			32.2	Overcurrent detected at software detection function (during operation)	DB	○	○	○
			32.3	Overcurrent detected at hardware detection circuit (during a stop)	DB			○
			32.4	Overcurrent detected at software detection function (during a stop)	DB	○	○	○
	33	Overvoltage	33.1	Main circuit voltage error	EDB	○	○	○
	34	SSCNET receive error 1	34.1	SSCNET receive data error	SD	○	○ (Note 5)	○
			34.2	SSCNET connector connection error	SD	○	○	○
			34.3	SSCNET communication data error	SD	○	○	○
			34.4	Hardware error signal detection	SD	○	○	○
			34.5	SSCNET receive data error (safety observation function)	SD	○	○	○
			34.6	SSCNET communication data error (safety observation function)	SD	○	○	○
	35	Command frequency error	35.1	Command frequency error	SD	○	○	○
	36	SSCNET receive error 2	36.1	Continuous communication data error	SD	○	○	○
			36.2	Continuous communication data error (safety observation function)	SD	○	○	○
	37	Parameter error	37.1	Parameter setting range error	DB		○	○
			37.2	Parameter combination error	DB		○	○
			37.3	Point table setting error	DB			○
			37.4	Command electronic gear setting error 2	DB		○	○

	No.	Name	Detail No.	Detail name	Stop method (Note 2, 3)	Alarm deactivation		
						Alarm reset	Communication reset	Cycling the power
Alarm	39	Program error	39.1	Program error	DB			○
			39.2	Instruction argument external error	DB			○
			39.3	Register No. error	DB			○
			39.4	Non-correspondence instruction error	DB			○
	3A	Inrush current suppression circuit error	3A.1	Inrush current suppression circuit error	EDB			○
	3D	Parameter setting error for driver communication	3D.1	Parameter combination error for driver communication on slave	DB			○
			3D.2	Parameter combination error for driver communication on master	DB			○
	3E	Operation mode error	3E.1	Operation mode error	DB		○	○
			3E.6	Operation mode switch error	DB			○
	42	Servo control error (for linear servo motor and direct drive motor)	42.1	Servo control error by position deviation	EDB	(Note 4)	(Note 4)	○
			42.2	Servo control error by speed deviation	EDB	(Note 4)	(Note 4)	○
			42.3	Servo control error by torque/thrust deviation	EDB	(Note 4)	(Note 4)	○
		Fully closed loop control error (for fully closed loop control)	42.8	Fully closed loop control error by position deviation	EDB	(Note 4)	(Note 4)	○
			42.9	Fully closed loop control error by speed deviation	EDB	(Note 4)	(Note 4)	○
			42.A	Fully closed loop control error by position deviation during command stop	EDB	(Note 4)	(Note 4)	○
	45	Main circuit device overheat	45.1	Main circuit device overheat error 1	SD	○ (Note 1)	○ (Note 1)	○ (Note 1)
			45.2	Main circuit device overheat error 2	SD	○ (Note 1)	○ (Note 1)	○ (Note 1)
	46	Servo motor overheat	46.1	Abnormal temperature of servo motor 1	SD	○ (Note 1)	○ (Note 1)	○ (Note 1)
			46.2	Abnormal temperature of servo motor 2	SD	○ (Note 1)	○ (Note 1)	○ (Note 1)
			46.3	Thermistor disconnected error	SD	○ (Note 1)	○ (Note 1)	○ (Note 1)
			46.4	Thermistor circuit error	SD	○ (Note 1)	○ (Note 1)	○ (Note 1)
			46.5	Abnormal temperature of servo motor 3	DB	○ (Note 1)	○ (Note 1)	○ (Note 1)
			46.6	Abnormal temperature of servo motor 4	DB	○ (Note 1)	○ (Note 1)	○ (Note 1)
	47	Cooling fan error	47.1	Cooling fan stop error	SD			○
			47.2	Cooling fan speed reduction error	SD			○
	50	Overload 1	50.1	Thermal overload error 1 during operation	SD	○ (Note 1)	○ (Note 1)	○ (Note 1)
			50.2	Thermal overload error 2 during operation	SD	○ (Note 1)	○ (Note 1)	○ (Note 1)
			50.3	Thermal overload error 4 during operation	SD	○ (Note 1)	○ (Note 1)	○ (Note 1)
			50.4	Thermal overload error 1 during a stop	SD	○ (Note 1)	○ (Note 1)	○ (Note 1)
			50.5	Thermal overload error 2 during a stop	SD	○ (Note 1)	○ (Note 1)	○ (Note 1)
			50.6	Thermal overload error 4 during a stop	SD	○ (Note 1)	○ (Note 1)	○ (Note 1)
	51	Overload 2	51.1	Thermal overload error 3 during operation	DB	○ (Note 1)	○ (Note 1)	○ (Note 1)
			51.2	Thermal overload error 3 during a stop	DB	○ (Note 1)	○ (Note 1)	○ (Note 1)
	52	Error excessive	52.1	Excess droop pulse 1	SD	○	○	○
			52.3	Excess droop pulse 2	SD	○	○	○
			52.4	Error excessive during 0 torque limit	SD	○	○	○
			52.5	Excess droop pulse 3	EDB	○	○	○

	No.	Name	Detail No.	Detail name	Stop method (Note 2, 3)	Alarm deactivation		
						Alarm reset	Communication reset	Cycling the power
Alarm	54	Oscillation detection	54.1	Oscillation detection error	EDB	○	○	○
	56	Forced stop error	56.2	Over speed during forced stop	EDB	○	○	○
			56.3	Estimated distance over during forced stop	EDB	○	○	○
	61	Operation error	61.1	Point table setting range error	DB	○		○
	63	STO timing error	63.1	STO1 off	DB	○	○	○
			63.2	STO2 off	DB	○	○	○
			63.5	STO by functional safety unit	DB	○	○	○
	64	Functional safety unit setting error	64.1	STO input error	DB			○
			64.2	Compatibility mode setting error	DB			○
			64.3	Operation mode setting error	DB			○
	65	Functional safety unit connection error	65.1	Functional safety unit communication error 1	SD			○
			65.2	Functional safety unit communication error 2	SD			○
			65.3	Functional safety unit communication error 3	SD			○
			65.4	Functional safety unit communication error 4	SD			○
			65.5	Functional safety unit communication error 5	SD			○
			65.6	Functional safety unit communication error 6	SD			○
			65.7	Functional safety unit communication error 7	SD			○
			65.8	Functional safety unit shut-off signal error 1	DB			○
			65.9	Functional safety unit shut-off signal error 2	DB			○
	66	Encoder initial communication error (safety observation function)	66.1	Encoder initial communication - Receive data error 1 (safety observation function)	DB			○
			66.2	Encoder initial communication - Receive data error 2 (safety observation function)	DB			○
			66.3	Encoder initial communication - Receive data error 3 (safety observation function)	DB			○
			66.7	Encoder initial communication - Transmission data error 1 (safety observation function)	DB			○
			66.9	Encoder initial communication - Process error 1 (safety observation function)	DB			○
	67	Encoder normal communication error 1 (safety observation function)	67.1	Encoder normal communication - Receive data error 1 (safety observation function)	DB			○
			67.2	Encoder normal communication - Receive data error 2 (safety observation function)	DB			○
			67.3	Encoder normal communication - Receive data error 3 (safety observation function)	DB			○
			67.4	Encoder normal communication - Receive data error 4 (safety observation function)	DB			○
			67.7	Encoder normal communication - Transmission data error 1 (safety observation function)	DB			○
	68	STO diagnosis error	68.1	Mismatched STO signal error	DB			○

	No.	Name	Detail No.	Detail name	Stop method (Note 2, 3)	Alarm deactivation		
						Alarm reset	Communication reset	Cycling the power
Alarm	69	Command error	69.1	Forward rotation-side software limit detection - Command excess error	SD	○	○	○
			69.2	Reverse rotation-side software limit detection - Command excess error	SD	○	○	○
			69.3	Forward rotation stroke end detection - Command excess error	SD	○	○	○
			69.4	Reverse rotation stroke end detection - Command excess error	SD	○	○	○
			69.5	Upper stroke limit detection - Command excess error	SD	○	○	○
			69.6	Lower stroke limit detection - Command excess error	SD	○	○	○
	70	Load-side encoder initial communication error 1	70.1	Load-side encoder initial communication - Receive data error 1	DB			○
			70.2	Load-side encoder initial communication - Receive data error 2	DB			○
			70.3	Load-side encoder initial communication - Receive data error 3	DB			○
			70.4	Load-side encoder initial communication - Encoder malfunction (Note 6)	DB			○
			70.5	Load-side encoder initial communication - Transmission data error 1	DB			○
			70.6	Load-side encoder initial communication - Transmission data error 2	DB			○
			70.7	Load-side encoder initial communication - Transmission data error 3	DB			○
			70.8	Load-side encoder initial communication - Incompatible encoder (Note 6)	DB			○
			70.A	Load-side encoder initial communication - Process error 1	DB			○
			70.B	Load-side encoder initial communication - Process error 2	DB			○
			70.C	Load-side encoder initial communication - Process error 3	DB			○
			70.D	Load-side encoder initial communication - Process error 4	DB			○
			70.E	Load-side encoder initial communication - Process error 5	DB			○
			70.F	Load-side encoder initial communication - Process error 6	DB			○
	71	Load-side encoder normal communication error 1	71.1	Load-side encoder normal communication - Receive data error 1	EDB			○
			71.2	Load-side encoder normal communication - Receive data error 2	EDB			○
			71.3	Load-side encoder normal communication - Receive data error 3	EDB			○
			71.5	Load-side encoder normal communication - Transmission data error 1	EDB			○
			71.6	Load-side encoder normal communication - Transmission data error 2	EDB			○
			71.7	Load-side encoder normal communication - Transmission data error 3	EDB			○
			71.9	Load-side encoder normal communication - Receive data error 4	EDB			○
			71.A	Load-side encoder normal communication - Receive data error 5	EDB			○

	No.	Name	Detail No.	Detail name	Stop method (Note 2, 3)	Alarm deactivation		
						Alarm reset	Communication reset	Cycling the power
Alarm	72	Load-side encoder normal communication error 2	72.1	Load-side encoder data error 1	EDB			○
			72.2	Load-side encoder data update error	EDB			○
			72.3	Load-side encoder data waveform error	EDB			○
			72.4	Load-side encoder non-signal error	EDB			○
			72.5	Load-side encoder hardware error 1	EDB			○
			72.6	Load-side encoder hardware error 2	EDB			○
			72.9	Load-side encoder data error 2	EDB			○
	74	Option card error 1	74.1	Option card error 1	DB			○
			74.2	Option card error 2	DB			○
			74.3	Option card error 3	DB			○
			74.4	Option card error 4	DB			○
			74.5	Option card error 5	DB			○
	75	Option card error 2	75.3	Option card connection error	EDB			○
			75.4	Option card disconnected	DB			○
	79	Functional safety unit diagnosis error	79.1	Functional safety unit power voltage error	DB	○ (Note 7)		○
			79.2	Functional safety unit internal error	DB			○
			79.3	Abnormal temperature of functional safety unit	SD	○ (Note 7)		○
			79.4	Servo amplifier error	SD			○
			79.5	Input device error	SD			○
			79.6	Output device error	SD			○
			79.7	Mismatched input signal error	SD			○
			79.8	Position feedback fixing error	DB			○
	7A	Parameter setting error (safety observation function)	7A.1	Parameter verification error (safety observation function)	DB			○
			7A.2	Parameter setting range error (safety observation function)	DB			○
			7A.3	Parameter combination error (safety observation function)	DB			○
			7A.4	Functional safety unit combination error (safety observation function)	DB			○
	7B	Encoder diagnosis error (safety observation function)	7B.1	Encoder diagnosis error 1 (safety observation function)	DB			○
			7B.2	Encoder diagnosis error 2 (safety observation function)	DB			○
			7B.3	Encoder diagnosis error 3 (safety observation function)	DB			○
			7B.4	Encoder diagnosis error 4 (safety observation function)	DB			○
	7C	Functional safety unit communication diagnosis error (safety observation function)	7C.1	Functional safety unit communication setting error (safety observation function)	SD	○ (Note 7)	○	○
			7C.2	Functional safety unit communication data error (safety observation function)	SD	○ (Note 7)	○	○
	7D	Safety observation error	7D.1	Stop observation error	DB	○ (Note 3)		○
			7D.2	Speed observation error	DB	○ (Note 7)		○
	82	Master-slave operation error 1	82.1	Master-slave operation error 1	EDB	○	○	○
	84	Network module initialization error	84.1	Network module undetected error	DB			○
			84.2	Network module initialization error 1	DB			○
			84.3	Network module initialization error 2	DB			○
	85	Network module error	85.1	Network module error 1	SD			○
			85.2	Network module error 2	SD			○
			85.3	Network module error 3	SD			○

	No.	Name	Detail No.	Detail name	Stop method (Note 2, 3)	Alarm deactivation		
						Alarm reset	Communication reset	Cycling the power
Alarm	86	Network communication error	86.1	Network communication error 1	SD	○		○
			86.2	Network communication error 2	SD	○		○
			86.3	Network communication error 3	SD	○		○
	8A	USB communication time-out error/ serial communication time-out error/ Modbus RTU communication time-out error	8A.1	USB communication time-out error/serial communication time-out error	SD	○	○	○
			8A.2	Modbus RTU communication time-out error	SD	○	○	○
	8D	CC-Link IE communication error	8D.1	CC-Link IE communication error 1	SD	○		○
			8D.2	CC-Link IE communication error 2	SD	○		○
			8D.3	Master station setting error 1	DB	○		○
			8D.5	Master station setting error 2	DB			○
			8D.6	CC-Link IE communication error 3	SD	○		○
			8D.7	CC-Link IE communication error 4	SD	○		○
			8D.8	CC-Link IE communication error 5	SD	○		○
			8D.9	Synchronization error 1	SD			○
			8D.A	Synchronization error 2	SD			○
	8E	USB communication error/ serial communication error/ Modbus RTU communication error	8E.1	USB communication receive error/serial communication receive error	SD	○	○	○
			8E.2	USB communication checksum error/ serial communication checksum error	SD	○	○	○
			8E.3	USB communication character error/ serial communication character error	SD	○	○	○
			8E.4	USB communication command error/ serial communication command error	SD	○	○	○
			8E.5	USB communication data number error/serial communication data number error	SD	○	○	○
			8E.6	Modbus RTU communication receive error	SD	○	○	○
			8E.7	Modbus RTU communication message frame error	SD	○	○	○
			8E.8	Modbus RTU communication CRC error	SD	○	○	○
	88888	Watchdog	8888._	Watchdog	DB			○

Note 1. After resolving the source of trouble, cool the equipment for approximately 30 minutes.

2. The following shows three stop methods of DB, EDB, and SD.

DB: Stops with dynamic brake. (Coasts for the servo amplifier without dynamic brake.)
Coasts for MR-J4-03A6(-RJ) and MR-J4W2-0303B6. Note that EDB is applied when an alarm below occurs;
[AL. 30.1], [AL. 32.2], [AL. 32.4], [AL. 51.1], [AL. 51.2], [AL. 888]

EDB: Electronic dynamic brake stop (available with specified servo motors)
Refer to the following table for the specified servo motors. The stop method for other than the specified servo motors will be DB.

Series	Servo motor
HG-KR	HG-KR053/HG-KR13/HG-KR23/HG-KR43
HG-MR	HG-MR053/HG-MR13/HG-MR23/HG-MR43
HG-SR	HG-SR51/HG-SR52
HG-AK	HG-AK0136/HG-AK0236/HG-AK0336

SD: Forced stop deceleration

3. This is applicable when [Pr. PA04] is set to the initial value. The stop system of SD can be changed to DB using [Pr. PA04].
4. The alarm can be canceled by setting as follows:
For the fully closed loop control: set [Pr. PE03] to "1 _ _ _".
When a linear servo motor or direct drive motor is used: set [Pr. PL04] to "1 _ _ _".
5. In some controller communication status, the alarm factor may not be removed.
6. This alarm will occur only in the J3 compatibility mode.
7. Reset this while all the safety observation functions are stopped.

8.3 Warning list

	No.	Name	Detail No.	Detail name	Stop method (Note 2, 3)
Warning	90	Home position return incomplete warning	90.1	Home position return incomplete	
			90.2	Home position return abnormal termination	
			90.5	Z-phase unpassed	
	91	Servo amplifier overheat warning (Note 1)	91.1	Main circuit device overheat warning	
	92	Battery cable disconnection warning	92.1	Encoder battery cable disconnection warning	
			92.3	Battery degradation	
	93	ABS data transfer warning	93.1	ABS data transfer requirement warning during magnetic pole detection	
	95	STO warning	95.1	STO1 off detection	DB
			95.2	STO2 off detection	DB
			95.3	STO warning 1 (safety observation function)	DB
			95.4	STO warning 2 (safety observation function)	DB
			95.5	STO warning 3 (safety observation function)	DB
	96	Home position setting warning	96.1	In-position warning at home positioning	
			96.2	Command input warning at home positioning	
			96.3	Servo off warning at home positioning	
			96.4	Home positioning warning during magnetic pole detection	
	97	Positioning specification warning	97.1	Program operation disabled warning	
			97.2	Next station position warning	
	98	Software limit warning	98.1	Forward rotation-side software stroke limit reached	
			98.2	Reverse rotation-side software stroke limit reached	
	99	Stroke limit warning	99.1	Forward rotation stroke end off	(Note 4)
			99.2	Reverse rotation stroke end off	(Note 4)
			99.4	Upper stroke limit off	
			99.5	Lower stroke limit off	
	9A	Optional unit input data error warning	9A.1	Optional unit input data sign error	
			9A.2	Optional unit BCD input data error	
	9B	Error excessive warning	9B.1	Excess droop pulse 1 warning	
			9B.3	Excess droop pulse 2 warning	
			9B.4	Error excessive warning during 0 torque limit	
	9C	Converter error	9C.1	Converter unit error	
	9D	CC-Link IE warning 1	9D.1	Station number switch change warning	
			9D.2	Master station setting warning	
			9D.3	Overlapping station number warning	
			9D.4	Mismatched station number warning	
	9E	CC-Link IE warning 2	9E.1	CC-Link IE communication warning	
	9F	Battery warning	9F.1	Low battery	
			9F.2	Battery degradation warning	
	E0	Excessive regeneration warning	E0.1	Excessive regeneration warning	

	No.	Name	Detail No.	Detail name	Stop method (Note 2, 3)
Warning	E1	Overload warning 1	E1.1	Thermal overload warning 1 during operation	
			E1.2	Thermal overload warning 2 during operation	
			E1.3	Thermal overload warning 3 during operation	
			E1.4	Thermal overload warning 4 during operation	
			E1.5	Thermal overload error 1 during a stop	
			E1.6	Thermal overload error 2 during a stop	
			E1.7	Thermal overload error 3 during a stop	
			E1.8	Thermal overload error 4 during a stop	
	E2	Servo motor overheat warning	E2.1	Servo motor temperature warning	
	E3	Absolute position counter warning	E3.1	Multi-revolution counter travel distance excess warning	
			E3.2	Absolute position counter warning	
			E3.4	Absolute positioning counter EEP-ROM writing frequency warning	
			E3.5	Encoder absolute positioning counter warning	
	E4	Parameter warning	E4.1	Parameter setting range error warning	
	E5	ABS time-out warning	E5.1	Time-out during ABS data transfer	
			E5.2	ABSM off during ABS data transfer	
			E5.3	SON off during ABS data transfer	
	E6	Servo forced stop warning	E6.1	Forced stop warning	SD
			E6.2	SS1 forced stop warning 1 (safety observation function)	SD
			E6.3	SS1 forced stop warning 2 (safety observation function)	SD
	E7	Controller forced stop warning	E7.1	Controller forced stop input warning	SD
	E8	Cooling fan speed reduction warning	E8.1	Decreased cooling fan speed warning	
			E8.2	Cooling fan stop	
	E9	Main circuit off warning	E9.1	Servo-on signal on during main circuit off	DB
			E9.2	Bus voltage drop during low speed operation	DB
			E9.3	Ready-on signal on during main circuit off	DB
			E9.4	Converter unit forced stop	DB
	EA	ABS servo-on warning	EA.1	ABS servo-on warning	
	EB	The other axis error warning	EB.1	The other axis error warning	DB
	EC	Overload warning 2	EC.1	Overload warning 2	
	ED	Output watt excess warning	ED.1	Output watt excess warning	
	F0	Tough drive warning	F0.1	Instantaneous power failure tough drive warning	
			F0.3	Vibration tough drive warning	
	F2	Drive recorder - Miswriting warning	F2.1	Drive recorder - Area writing time-out warning	
			F2.2	Drive recorder - Data miswriting warning	
	F3	Oscillation detection warning	F3.1	Oscillation detection warning	

	No.	Name	Detail No.	Detail name	Stop method (Note 2, 3)
Warning	F4	Positioning warning	F4.4	Target position setting range error warning	
			F4.6	Acceleration time constant setting range error warning	
			F4.7	Deceleration time constant setting range error warning	
			F4.8	Control command input error warning	
			F4.9	Home position return type error warning	
	F5	Simple cam function - Cam data miswriting warning	F5.1	Cam data - Area writing time-out warning	
			F5.2	Cam data - Area miswriting warning	
			F5.3	Cam data checksum error	
	F6	Simple cam function - Cam control warning	F6.1	Cam axis one cycle current value restoration failed	
			F6.2	Cam axis feed current value restoration failed	
			F6.3	Cam unregistered error	
			F6.4	Cam control data setting range error	
			F6.5	Cam No. external error	
			F6.6	Cam control inactive	
	F7	Machine diagnosis warning	F7.1	Vibration failure prediction warning	
			F7.2	Friction failure prediction warning	
			F7.3	Total travel distance failure prediction warning	

Note 1. After resolving the source of trouble, cool the equipment for approximately 30 minutes.
2. The following shows two stop methods of DB and SD.
DB: Stops with dynamic brake. (Coasts for the servo amplifier without dynamic brake.)
Coasts for MR-J4-03A6(-RJ) and MR-J4W2-0303B6.
SD: Forced stop deceleration
3. This is applicable when [Pr. PA04] is set to the initial value. The stop system of SD can be changed to DB using [Pr. PA04].
4. For MR-J4-_A_ servo amplifier, quick stop or slow stop can be selected using [Pr. PD30].

8.4 Remedies

8.4.1 Remedies for alarms

⚠CAUTION

- When an alarm occurs, eliminate its cause, ensure safety, and deactivate the alarm to restart operation. Otherwise, it may cause injury.
- If [AL. 25 Absolute position erased] occurs, always make home position setting again. Otherwise, it may cause an unexpected operation.
- As soon as an alarm occurs, make the Servo-off status and interrupt the main circuit power.

POINT

- This section explains remedies for alarms exclusively for the MR-J4-_TM_. For remedies for other warnings, refer to [GF] and [Others] in the "MELSERVO-J4 Servo Amplifier Instruction Manual (Troubleshooting)".
- When any of the following alarms occurs, do not deactivate the alarm repeatedly to restart. Doing so will cause a malfunction of the servo amplifier and servo motor. Remove its cause and allow 30 minutes or more for cooling, and then resume the operation.
  - [AL. 30 Regenerative error]
  - [AL. 45 Main circuit device overheat]
  - [AL. 46 Servo motor overheat]
  - [AL. 50 Overload 1]
  - [AL. 51 Overload 2]
- [AL. 37 Parameter error] is not recorded in the alarm history.

Refer to this section and remedies for alarms of [GF] and [Others] in "MELSERVO-J4 Servo Amplifier Instruction Manual (Troubleshooting)" to remove the cause of the alarm.
Use MR Configurator2 to refer for the cause of alarm occurrence.

Alarm No.: 37		Name: Parameter error						
Alarm content		・A setting value of the point table is incorrect. ・An error in the electronic gear setting value was detected.						
Detail No.	Detail name	Cause		Check method	Check result	Action	Target
37.3	Point table setting error	(1)	The setting of point tables is incorrect.	Check if the setting value of the point table is within the setting range. Check the Point Table error No. with "Point table error No." of the object. Or, check the setting value on the point table display of MR Configurator2.	A setting value is incorrect.	Correct the setting value.	[TM]
					A setting value is correct.	Check (2).	
		(2)	A point table setting has changed due to a servo amplifier malfunction.	Replace the servo amplifier, and then check the repeatability.	It is not repeatable.	Replace the servo amplifier.	
37.4	Command electronic gear setting error 2	(1)	The electronic gear ratio is set out of the recommended range.	Check the setting of [Pr. PA06] and [Pr. PA07].	The electronic gear ratio is set out of the recommended range.	Set it within the recommended range.	
					The electronic gear ratio is set within the recommended range.	Check (2).	
		(2)	The setting value of the electronic gear has changed due to a servo amplifier malfunction.	Replace the servo amplifier, and then check the repeatability.	It is not repeatable.	Replace the servo amplifier.	

Alarm No.: 79		Name: Functional safety unit diagnosis error						
Alarm content		・A diagnosis of the functional safety unit failed.						
Detail No.	Detail name	Cause		Check method	Check result	Action	Target
79.4	Servo amplifier error	(1)	The Reset service or Reset To Factory was executed with a functional safety unit mounted.	Check if the Reset service or Reset To Factory was executed.	It was executed.	Cycle the power.	[TM]
					It was not executed.	Check (2).	
		(2)	The functional safety unit came off.	Check the installation of the functional safety unit.	It has a failure.	Install it correctly.	
					It has no failure.	Check (3).	
		(3)	The functional safety unit is malfunctioning.	Replace the functional safety unit, and then check the repeatability.	It is not repeatable.	Replace the functional safety unit.	
					It is repeatable.	Check (4).	
		(4)	The servo amplifier is malfunctioning.	Replace the servo amplifier, and then check the repeatability.	It is not repeatable.	Replace the servo amplifier.	
					It is repeatable.	Check (5).	
		(5)	There is a failure in the surrounding environment.	Check the noise, ambient temperature, etc.	It has a failure.	Take countermeasures against its cause.	

Alarm No.: 7A		Name: Parameter setting error (safety observation function)						
Alarm content		・A parameter of the functional safety unit failed.						
Detail No.	Detail name	Cause		Check method	Check result	Action	Target
7A.3	Parameter combination error (safety observation function)	(1)	The Reset service or Reset To Factory was executed with a functional safety unit mounted.	Check if the Reset service or Reset To Factory was executed.	It was executed.	Cycle the power.	[TM]
					It was not executed.	Check (2).	
		(2)	A parameter of the functional safety unit or servo amplifier is incorrect.	Check the parameter settings of the functional safety unit and servo amplifier. Functional safety unit: [Pr. PSA02], [Pr. PSA 18] to [Pr. PSA21], [Pr. PSC03], [Pr. PSD01] to [Pr. PSD17], [Pr. PSD26] Servo amplifier: [Pr. PA14]	It is not set correctly.	Set the parameter correctly.	

Alarm No.: 888		Name: Watchdog						
Alarm content		・An error occurred in the network module. ・A part such as CPU is malfunctioning.						
Detail No.	Detail name	Cause		Check method	Check result	Action	Target
88._	Watchdog	(1)	There is a failure in the surrounding environment of the Network module.	Check the noise, ambient temperature, etc.	It has a failure.	Take countermeasures against its cause.	[TM]
					It has no failure.	Check (2).	
		(2)	The network module is malfunctioning.	Replace the network module, and then check the repeatability.	It is not repeatable.	Replace the network module.	
					It is repeatable.	Check (3).	
		(3)	A part in the servo amplifier has a failure.	Replace the servo amplifier, and then check the repeatability.	It is not repeatable.	Replace the servo amplifier.	

8.4.2 Remedies for warnings

⚠CAUTION ●If [AL. E3 Absolute position counter warning] occurs, always make the home position setting again. Otherwise, it may cause an unexpected operation.

POINT

●This section explains remedies for warnings exclusively for the MR-J4-_TM_. For remedies for any other warnings, refer to [GF] and [Others] in the MELSERVO-J4 Servo Amplifier Instruction Manual (Troubleshooting).

●When any of the following warnings occurs, do not cycle the power of the servo amplifier repeatedly to restart. Doing so will cause a malfunction of the servo amplifier and servo motor. If the power of the servo amplifier is switched off/on during the warnings, allow more than 30 minutes for cooling before resuming operation.

- [AL. 91 Servo amplifier overheat warning]
- [AL. E0 Excessive regeneration warning]
- [AL. E1 Overload warning 1]
- [AL. E2 Servo motor overheat warning]
- [AL. EC Overload warning 2]

●Warnings (except [AL. F0 Tough drive warning]) are not recorded in the alarm history.

If [AL. E6] or [AL. E9] occurs, the amplifier will be the servo-off status. If any other warning occurs, operation can be continued but an alarm may occur and proper operation may not be performed.
Refer to this section and remedies for warnings of [GF] and [Others] in the MELSERVO-J4 Servo Amplifier Instruction Manual (Troubleshooting) to remove the cause of a warning. Use MR Configurator2 to refer to the cause of warning occurrence.

Alarm No.: 90		Name: Home position return incomplete warning						
Alarm content		▪ A home position return did not complete normally with the positioning function.						
Detail No.	Detail name		Cause	Check method	Check result	Action	Target
90.1	Home position return incomplete	(1)	An automatic operation was executed when the home position return had not been completed.	Check if the home position return has not been executed (if Home position return completion 2 (S_ZP2) is off.).	A home position return has not been executed.	Execute a home position return.	[TM]
					A home position return has been executed.	Check (2).	
		(2)	A positioning operation was executed without home position setting with an absolute position after [AL. 25 Absolute position erased] occurred.	Check if [AL. 25 Absolute position erased] occurred using alarm history.	[AL. 25 Absolute position erased] occurred.	Check the battery voltage and battery cable for a failure and execute a home position return after removing the failure.	
					[AL. 25 Absolute position erased] did not occur.	Check (3).	
		(3)	[AL. E3 Absolute position counter warning] occurred simultaneously with this alarm.	Check if [AL. 90.1] occurred simultaneously with the start of the positioning operation.	[AL. 90.1] did not occur simultaneously with the start of the positioning operation but occurred during positioning operation.	Remove the cause of [AL. E3], and execute a home position return. (Check the check method for [AL. E3].)	
					[AL. 90.1] occurred simultaneously with the start of the positioning operation.	Check (4).	
		(4)	A software stroke limit/stroke limit was detected.	Check if [AL. 98 Software stroke limit warning] or [AL. 99 Stroke limit warning] occurred in the profile mode, point table method and indexer method.	[AL. 98 Software stroke limit warning] or [AL. 99 Stroke limit warning] occurred in the profile mode, point table method and indexer method.	Move the machine within the limit range, and then execute a home position return. When the home position is fixed, enable servo-on again.	
					[AL. 98 Software stroke limit warning] or [AL 99 Stroke limit warning] have not yet occurred. Or the cyclic mode has been set.	Check (5).	
		(5)	Home position return completion 2 (S_ZP2) turned off after a home position return was executed.	Check if Home position return completion 2 (S_ZP2) is off.	Home position return completion 2 (S_ZP2) is off.	Check the conditions in which Home position return completion 2 (S_ZP2) turns off. (Refer to Status DO 2 described in respective communication method manuals of "MR-J4-_TM_ Servo Amplifier Instruction Manual")	

Alarm No.: 95		Name: STO warning						
Alarm content		・STO input signal turns off while the servo motor stops. ・A diagnosis of input devices was not executed. ・The safety observation function was enabled in the test mode.						
Detail No.	Detail name	Cause		Check method	Check result	Action	Target
95.4	STO warning 2 (safety observation function)	(1)	The test operation mode was not set correctly.	Check if the servo amplifier and functional safety unit are set to the test operation mode.	It is not set.	Set it correctly.	[TM]
					It is set.	Check (2).	
		(2)	An error occurred in safety communication.	Check the description "Initialization communication with the controller has not completed." of the section 8.5.	It is not repeatable.	Take countermeasures against its cause.	
					It is repeatable.	Check (3).	
		(3)	"Input mode selection" in [Pr. PSA02 Functional safety unit setting] is not set correctly.	Set [Pr. PSA02] correctly and check the repeatability.	It is not repeatable.	Review the parameter.	
					It is repeatable.	Check (4).	
		(4)	The servo amplifier is malfunctioning.	Replace the servo amplifier, and then check the repeatability.	It is not repeatable.	Replace the servo amplifier.	
					It is repeatable.	Check (5).	
		(5)	The functional safety unit is malfunctioning.	Replace the functional safety unit, and then check the repeatability.	It is not repeatable.	Replace the functional safety unit.	
					It is repeatable.	Check (6).	
		(6)	Something near the device caused it.	Check the noise, ambient temperature, etc.	It has a failure.	Take countermeasures against its cause.	

Alarm No.: F4		Name: Positioning warning						
Alarm content		・The operation setting was set out of range.						
Detail No.	Detail name	Cause		Check method	Check result	Action	Target
F4.6	Acceleration time constant setting range error warning	(1)	The acceleration time constant or the deceleration time constant was set out of range.	Check the setting value of the acceleration time constant ([Pr. PT49]) and the deceleration time constant ([Pr. PT50]).	It is out of setting range.	Set the acceleration time constant and the deceleration time constant correctly, and cancel the warning (turn on C_ORST).	[TM]
		(2)	The synchronous acceleration time constant was set out of range when the superimposed synchronous control function had been used.	Check the setting value of the synchronous acceleration time constant.	It is out of setting range.	Set the synchronous acceleration time constant correctly, and cancel the warning (turn on C_ORST).	
F4.7	Deceleration time constant setting range error warning	(1)	The acceleration time constant or the deceleration time constant was set out of range.	Check the setting value of the acceleration time constant ([Pr. PT49]) and the deceleration time constant ([Pr. PT50]).	It is out of setting range.	Set the acceleration time constant and the deceleration time constant correctly, and cancel the warning (turn on C_ORST).	
		(2)	The synchronous deceleration time constant was set out of range when the superimposed synchronous control function had been used.	Check the setting value of the synchronous deceleration time constant.	It is out of setting range.	Set the synchronous deceleration time constant correctly, and cancel the warning (turn on C_ORST).	
F4.8	Control command input error warning	(1)	The unit was set to degree and the relative position command was input.	Check the status of [Pr. PT01] and Controlword bit 6.	Controlword bit 6 is on with [Pr. PT01] set to "_ 2 _ _".	Turn off Controlword bit 6 and cancel the warning (turn on C_ORST).	

8.5 Troubleshooting at power on

When a system error occurs at power on of the controller, improper boot of the servo amplifier might be the cause. Check the display of the servo amplifier, and take actions according to this section.

Display	Description	Cause	Checkpoint	Action
000	The network module or servo amplifier is malfunctioning.	The network module is malfunctioning.	Replace the network module, and then check the repeatability.	Replace the network module.
		The servo amplifier is malfunctioning.	Replace the servo amplifier, and then check the repeatability.	Replace the servo amplifier.
Ab	Initialization communication with the controller has not completed.	The setting of the axis No. is incorrect.	Check that the other servo amplifier is not assigned to the same axis No.	Set it correctly.
		Axis No. does not match with the axis No. set to the controller.	Check the setting and axis No. of the controller.	Set it correctly.
		An Ethernet cable was disconnected.	"Ab" is displayed in the corresponding axis and following axes.	Replace the Ethernet cable of the corresponding axis.
			Check if the connector is unplugged.	Connect it correctly.
		The IP address set in the network module and the IP address of the controller do not match.	Check the IP address with the "AnybusIPconfig" tool or the system configuration window of MR Configurator2.	Set the IP address correctly.
		The power of the servo amplifier was turned off.	"Ab" is displayed in the corresponding axis and following axes.	Check the power of the servo amplifier.
		The servo amplifier is malfunctioning.	"Ab" is displayed in the corresponding axis and following axes.	Replace the servo amplifier of the corresponding axis.
		The network module is malfunctioning.	"Ab" is displayed in the corresponding axis and following axes.	Replace the network module of the corresponding axis.
b##. (Note)	The system has been in the test operation mode.	Test operation mode has been enabled.	Test operation select switch (SW1-1) is turned on.	Turn off the test operation select switch (SW1-1).
off	Operation mode for manufacturer setting is set.	Operation mode for manufacturer setting is enabled.	Check if all of the mode select switches (SW1) are on.	Set the mode select switches (SW1) correctly.

Note. ## indicates axis No.

8.6 Trouble which does not trigger an alarm/warning

Refer to this section and Trouble which does not trigger alarm/warning in "MELSERVO-J4 Servo Amplifier Instruction Manual (Troubleshooting)" to remove the cause of the trouble.

Description	Cause	Checkpoint	Action	Target
The servo motor does not operate.	The connection of the servo motor is incorrect.	Check the wiring of U/V/W.	Connect them correctly.	[TM]
	The servo motor power cable is connected to the servo amplifier of a different axis.	Check if the encoder cable and the servo motor power cable are connected to the same servo amplifier.	Connect the encoder cable and the servo motor power cable correctly.	
	An alarm or warning is occurring.	Check if an alarm or warning is occurring.	Check the contents of the alarm/warning, and remove its cause.	
	The system is in the test operation mode.	Check if the test operation select switch is on (up).	Cancel the test operation mode.	
	The motor-less operation is enabled.	Check the value set in [Pr. PC05].	Disable the motor-less operation.	
	The torque is insufficient due to large load.	Check instantaneous torque using MR Configurator2 if the load exceeds the maximum torque or torque limit value.	Reduce the load or use a servo motor with a larger capacity.	
	An unintended torque limit is enabled.	Check if the torque limit is enabled.	Cancel the torque limit.	
	The setting value for the torque limit is incorrect.	Check if the torque limit value is "0" with [Pr. PA11], [Pr. PA12] or the setting on the controller side.	Set it correctly.	
	A machine is interfering with the servo motor.	Check if a machine is interfering.	Remove the interference.	
	For a servo motor with an electromagnetic brake, the brake has not been released.	Check the power supply of the electromagnetic brake.	Turn on the electromagnetic brake power.	
	LSP (Forward rotation stroke end) and LSN (Reverse rotation stroke end) are not on.	Check if [AL. 99] is occurring.	Turn on LSP and LSN.	
	The setting of the control mode is incorrect.	Check the [Pr. PA01] setting.	Set it correctly.	
	The setting of the electronic gear is incorrect.	Check the setting of the electronic gear.	Set a proper value of the electronic gear.	
	The setting of point tables is incorrect.	Check the setting of the point table.	Review the setting of the point table.	
	The setting of the point table command is incorrect.	Check the setting of the point table command (Target point table).	Review the setting of the point table command.	
	The setting of the next station position is incorrect.	Check the setting of the next station position (Target point table).	Review the setting of the next station position.	
The home position return does not start.	The setting of the homing method is incorrect.	Check the Statusword bit 13 (Homing error) in the homing mode (hm). Check the setting of the homing method.	Review the setting of the homing method.	

MEMO

9. DIMENSIONS

9.1 Servo amplifier

(1) 200 V class

(a) MR-J4-10TM to MR-J4-60TM

[Unit: mm]

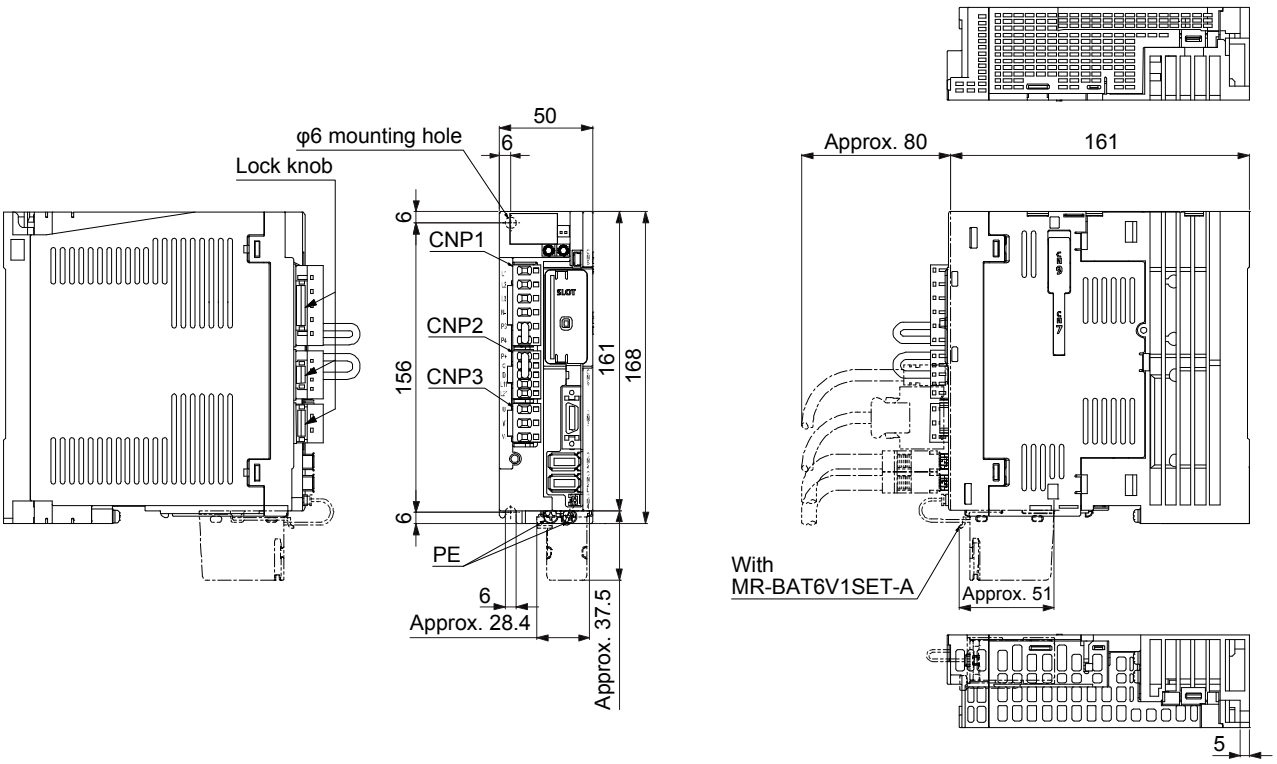

Mass: 1.0 [kg]

Terminal

CNP1
- L1
- L2
- L3
- N-
- P3
- P4

CNP2
- P+
- C
- D
- L11
- L21

CNP3
- U
- V
- W

PE

Screw size: M4
Tightening torque: 1.2 [N•m]

Mounting screw
Screw size: M5
Tightening torque: 3.24 [N•m]

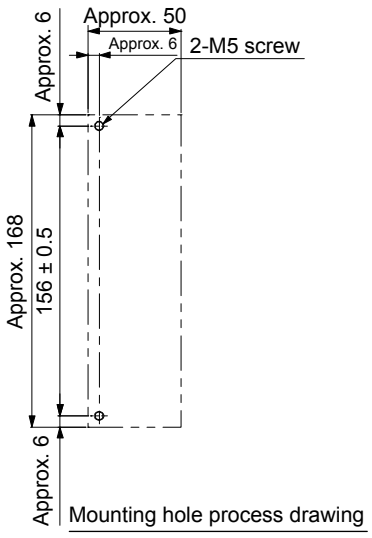

Mounting hole process drawing

(b) MR-J4-70TM/MR-J4-100TM

[Unit: mm]

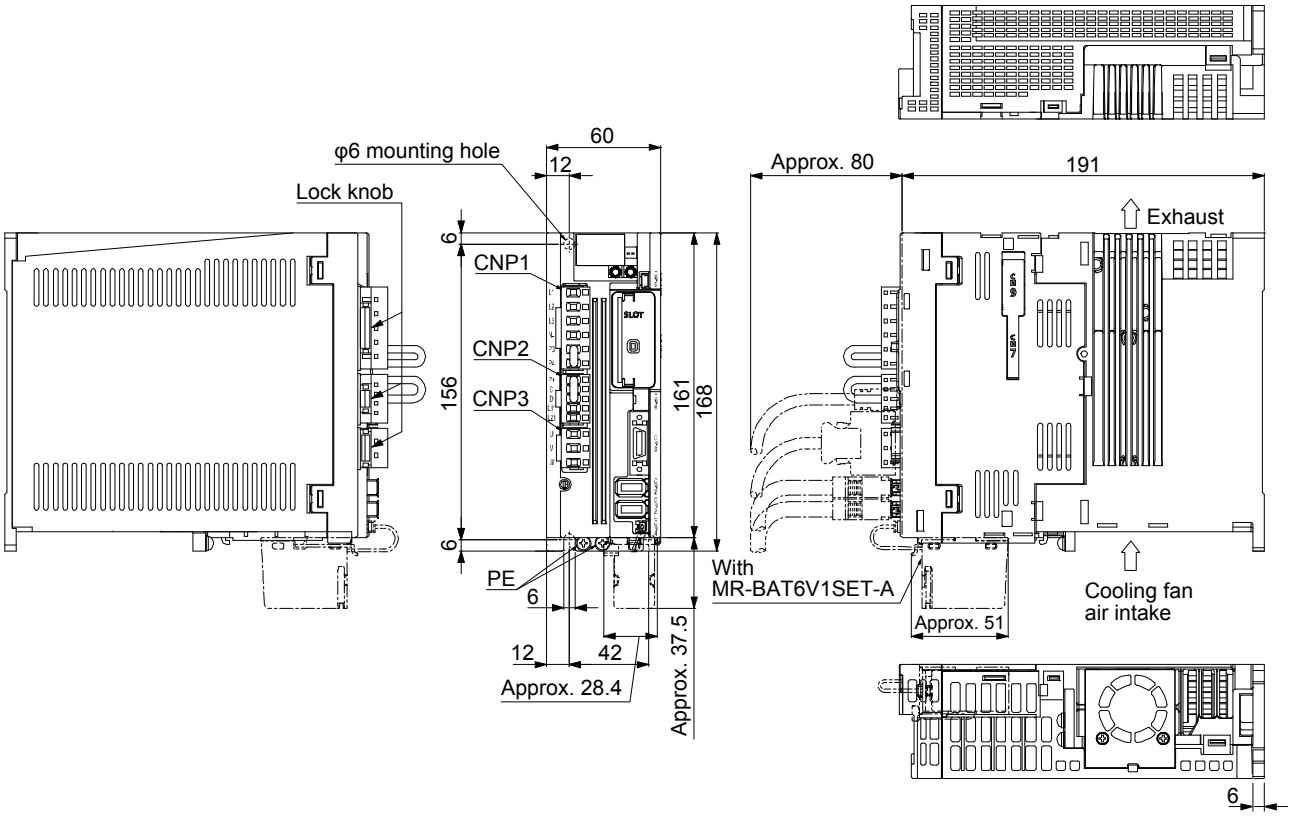

Mass: 1.4 [kg]

Terminal

CNP1
L1
L2
L3
N-
P3
P4

CNP2
P+
C
D
L11
L21

CNP3
U
V
W

PE

Screw size: M4
Tightening torque: 1.2 [N•m]

Mounting screw
Screw size: M5
Tightening torque: 3.24 [N•m]

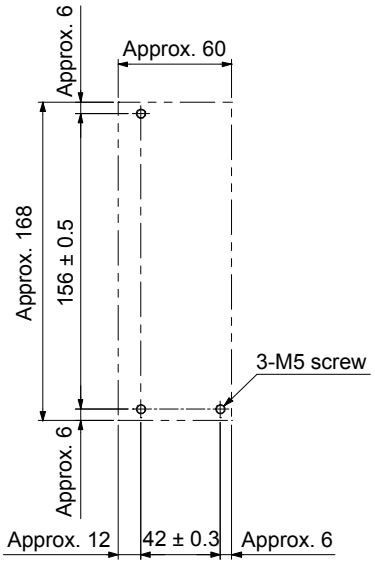

Mounting hole process drawing

(c) MR-J4-200TM

[Unit: mm]

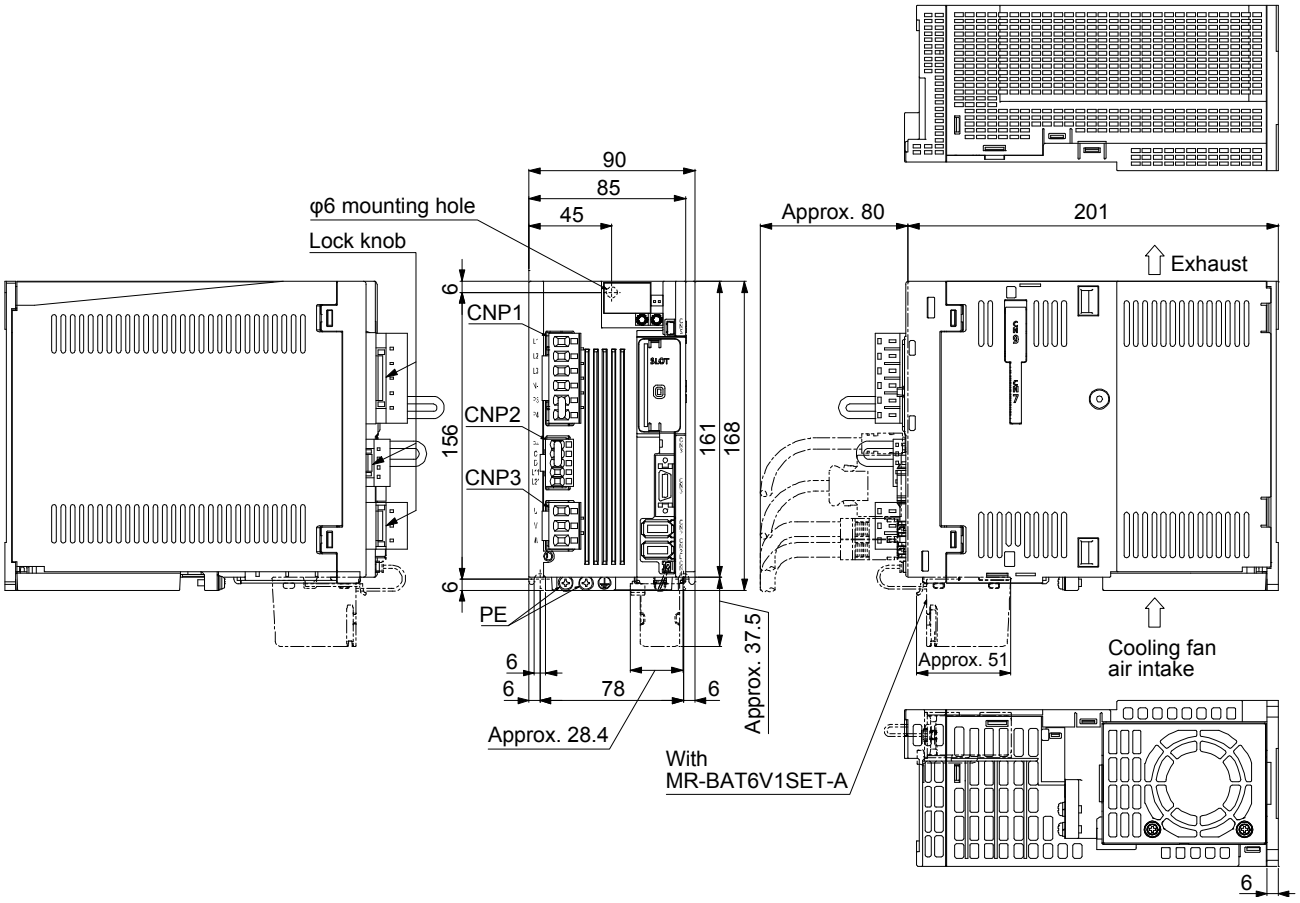

Mass: 2.1 [kg]

Mounting screw
Screw size: M5
Tightening torque: 3.24 [N•m]

Terminal

CNP1
L1
L2
L3
N-
P3
P4

CNP2
P+
C
D
L11
L21

CNP3
U
V
W

PE

Screw size: M4
Tightening torque: 1.2 [N•m]

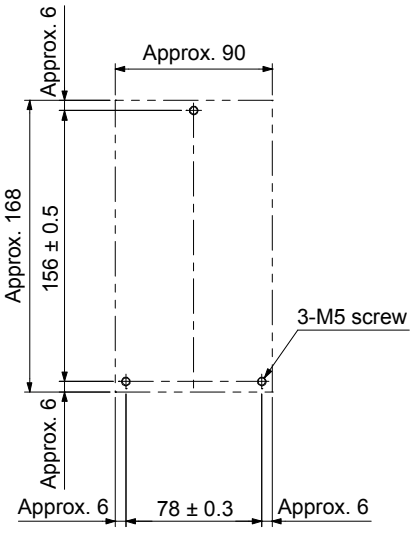

Mounting hole process drawing

(d) MR-J4-350TM

[Unit: mm]

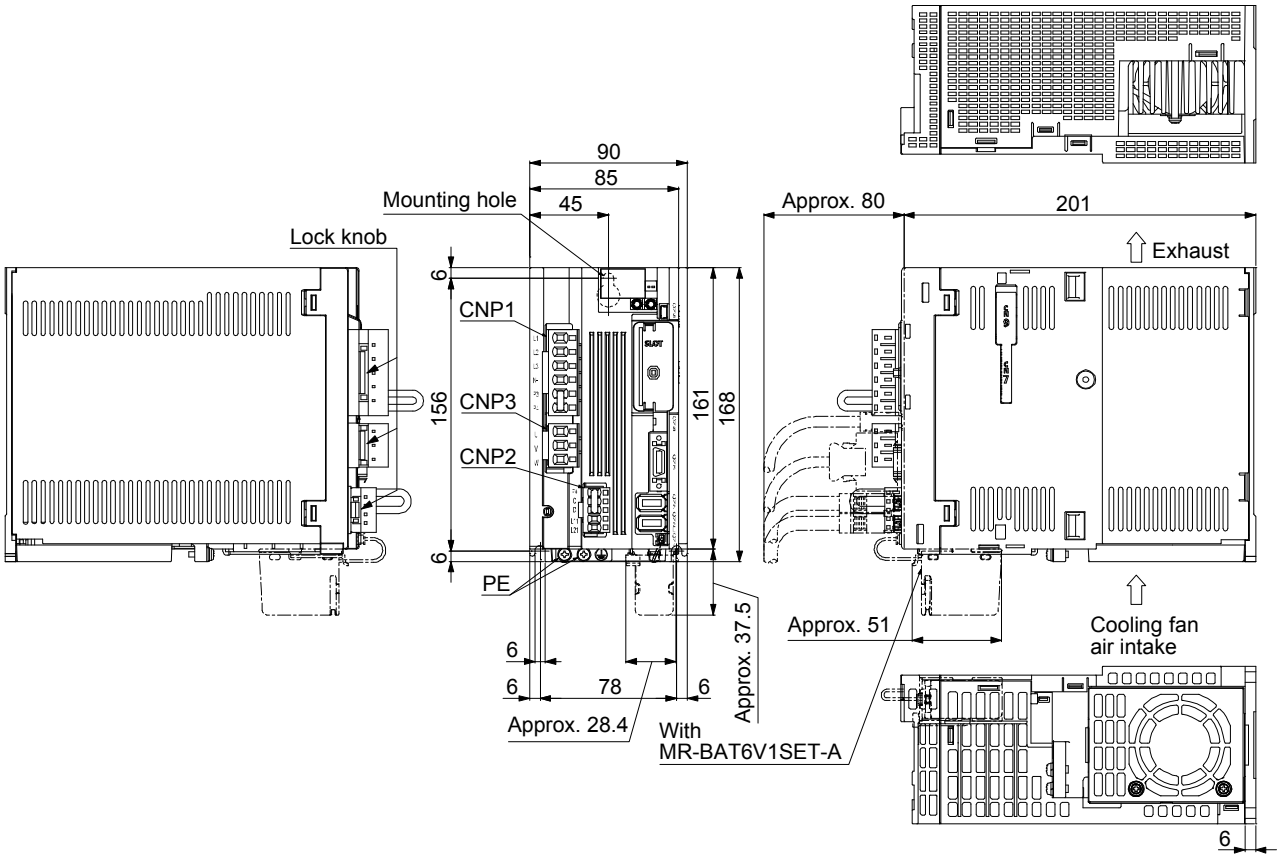

Mass: 2.3 [kg]

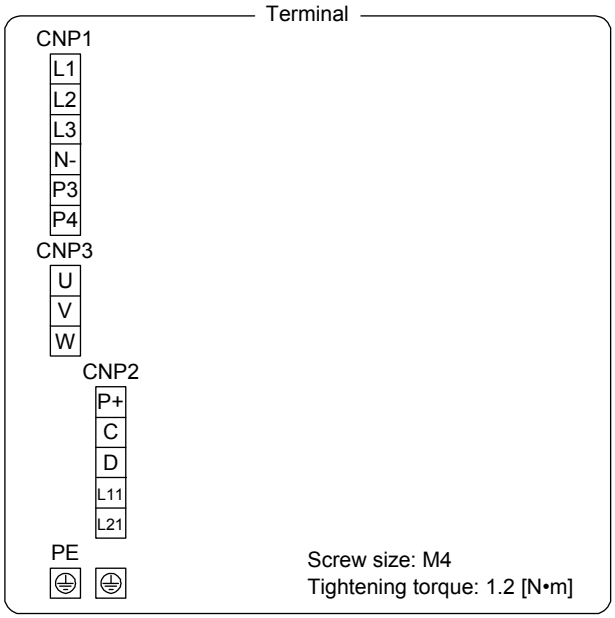

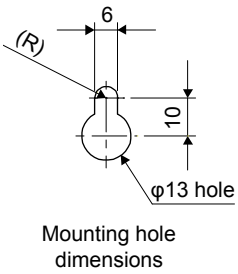

Mounting hole
dimensions

Mounting screw
Screw size: M5
Tightening torque: 3.24 [N•m]

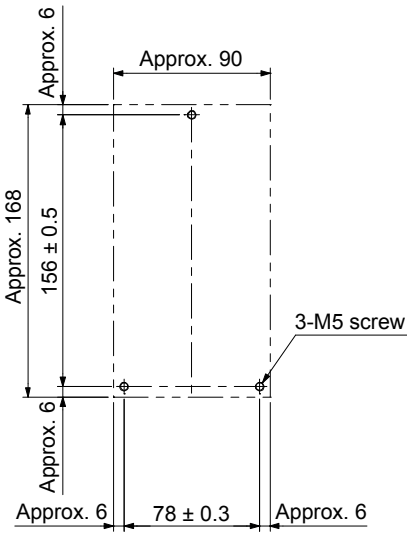

Mounting hole process drawing

(e) MR-J4-500TM

[Unit: mm]

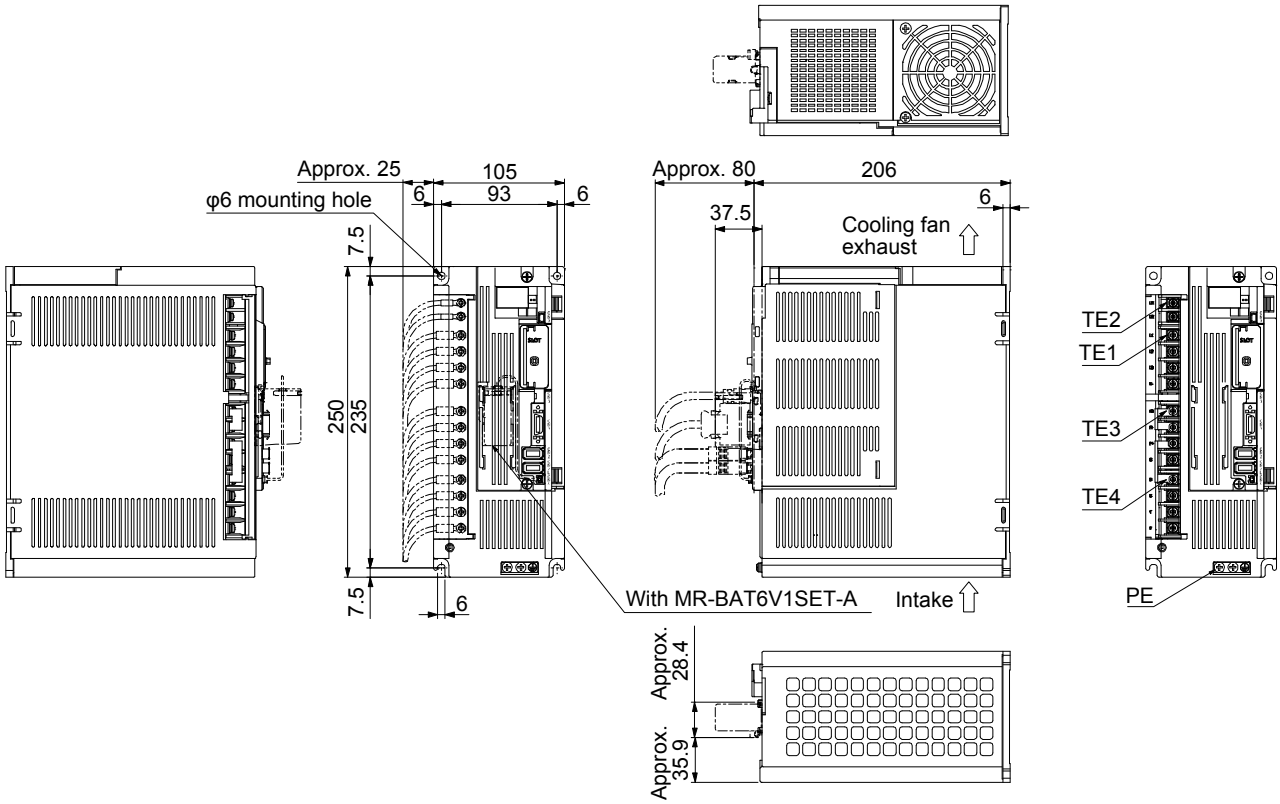

Mass: 4.0 [kg]

Mounting screw
Screw size: M5
Tightening torque: 3.24 [N•m]

Terminal

TE2	L11, L21	TE2	Screw size: M3.5 Tightening torque: 0.8 [N•m]
TE1	L1, L2, L3, N-	TE1	Screw size: M4 Tightening torque: 1.2 [N•m]
TE3	P3, P4, P+, C	TE3	Screw size: M4 Tightening torque: 1.2 [N•m]
TE4	D, U, V, W	TE4	Screw size: M4 Tightening torque: 1.2 [N•m]
	PE	PE	Screw size: M4 Tightening torque: 1.2 [N•m]

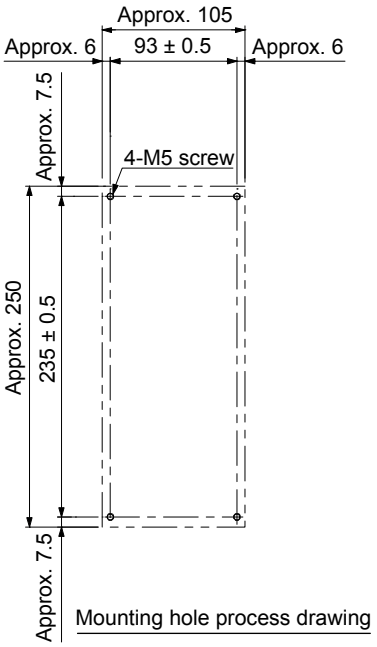

Mounting hole process drawing

(f) MR-J4-700TM

[Unit: mm]

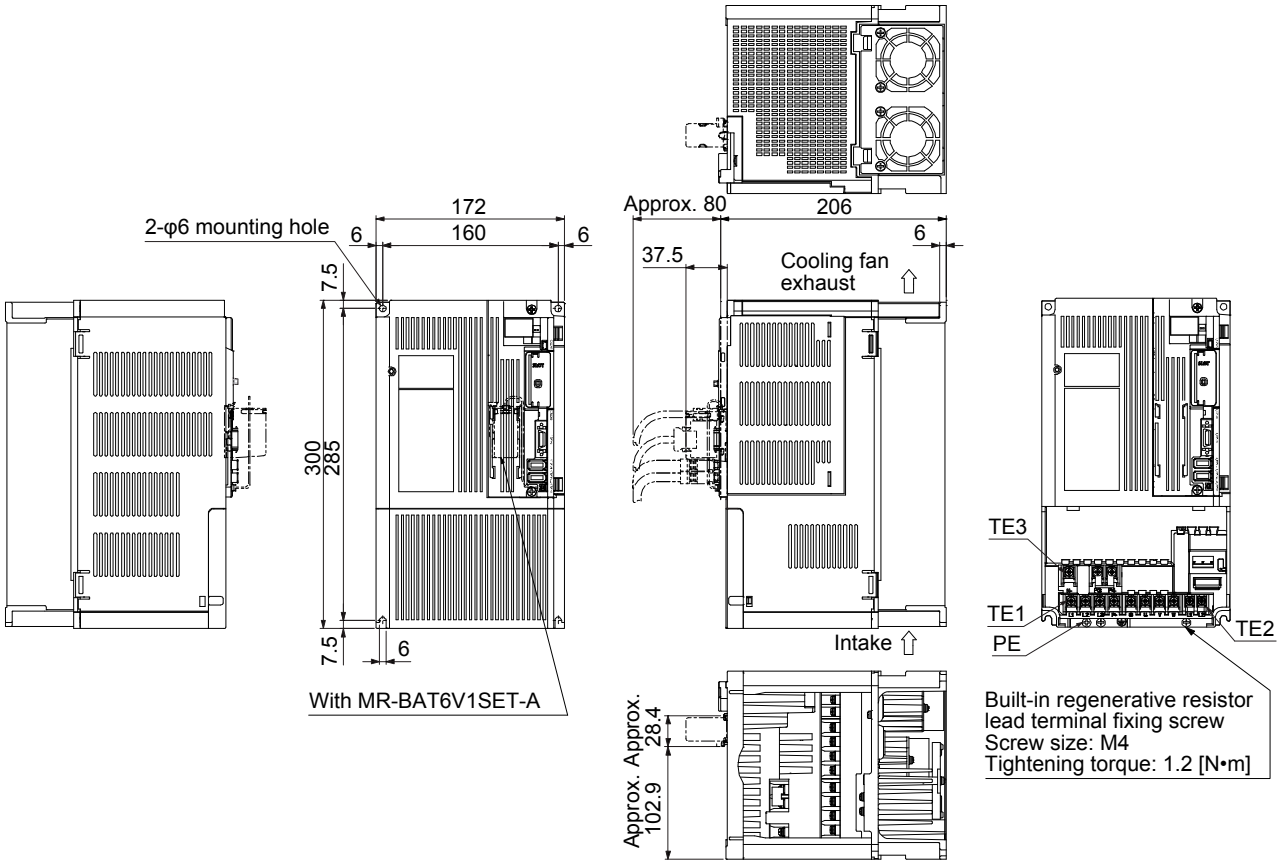

Mass: 6.2 [kg]

Mounting screw
Screw size: M5
Tightening torque: 3.24 [N•m]

Terminal

TE3 N- P3 P4

TE1 L1 L2 L3 P+ C U V W TE2 L11 L21

PE

TE3 Screw size: M4
Tightening torque: 1.2 [N•m]

TE1 Screw size: M4
Tightening torque: 1.2 [N•m]

TE2 Screw size: M3.5
Tightening torque: 0.8 [N•m]

PE Screw size: M4
Tightening torque: 1.2 [N•m]

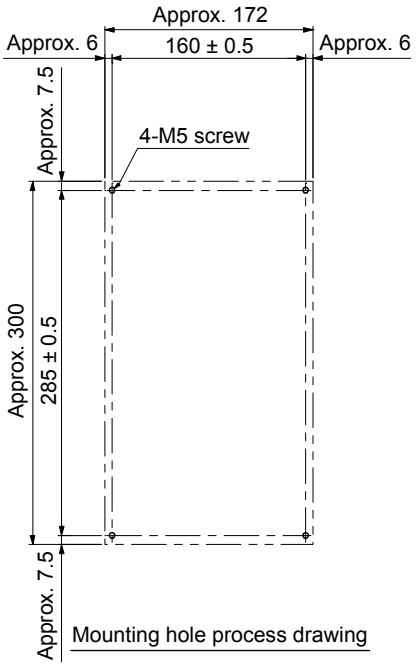

Mounting hole process drawing

(g) MR-J4-11KTM/MR-J4-15KTM

[Unit: mm]

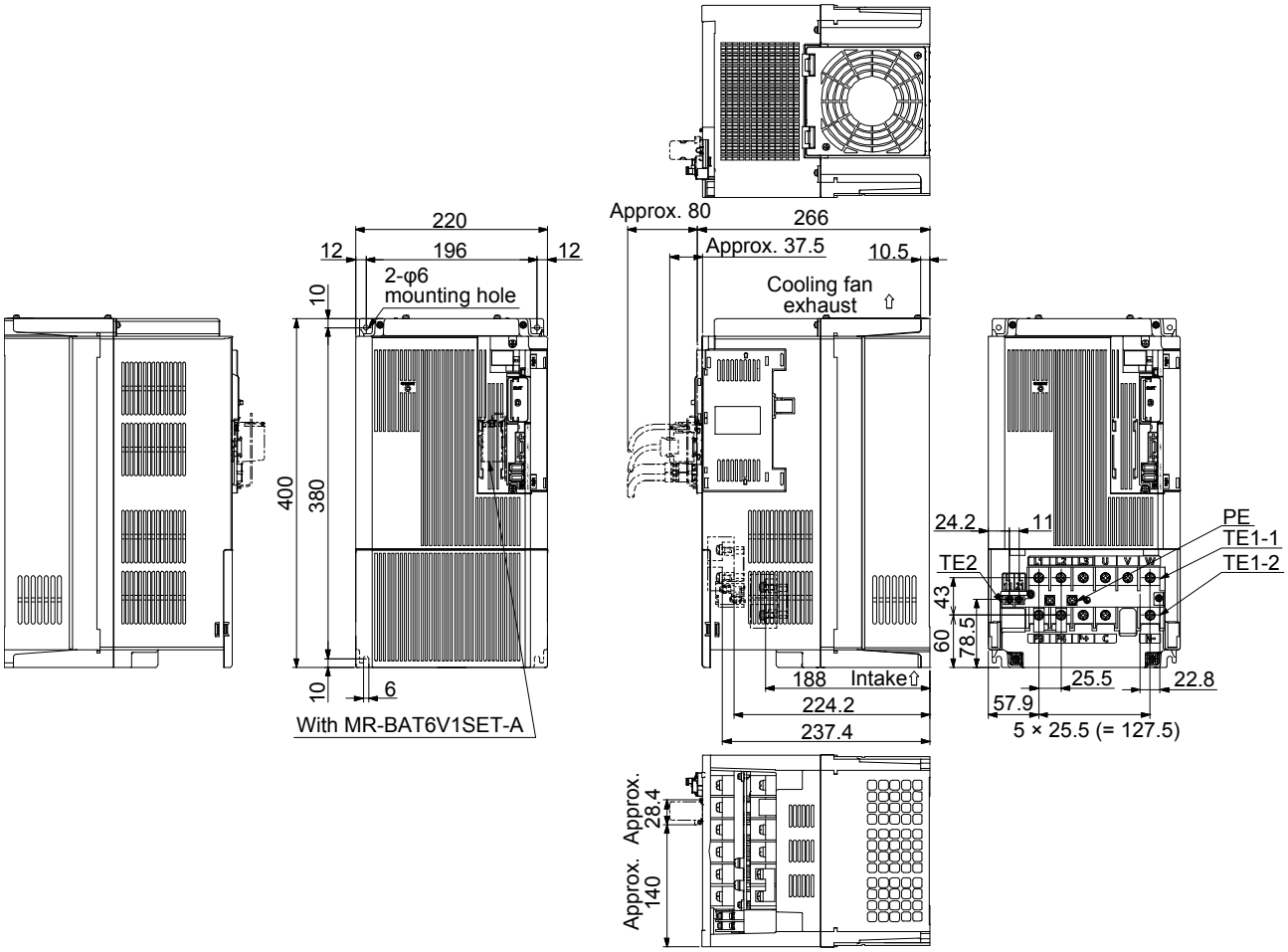

Mass: 13.4 [kg]

Terminal

TE1-1 L1 L2 L3 U V W

TE1-2 P3 P4 P+ C N-

TE2 L11 L21

PE

TE1-1 Screw size: M6
Tightening torque: 3.0 [N•m]

TE1-2 Screw size: M6
Tightening torque: 3.0 [N•m]

TE2 Screw size: M4
Tightening torque: 1.2 [N•m]

PE Screw size: M6
Tightening torque: 3.0 [N•m]

Mounting screw
Screw size: M5
Tightening torque: 3.24 [N•m]

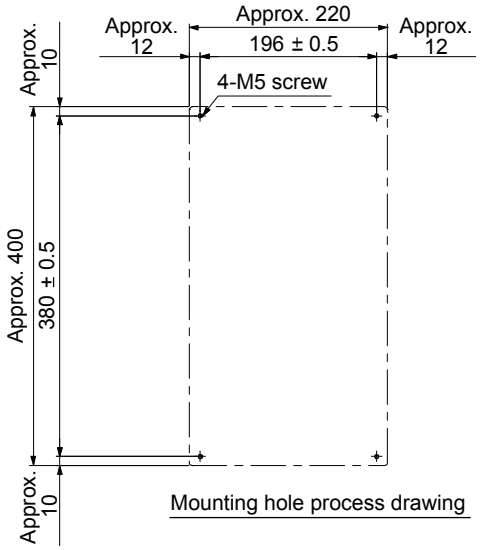

Mounting hole process drawing

(h) MR-J4-22KTM

[Unit: mm]

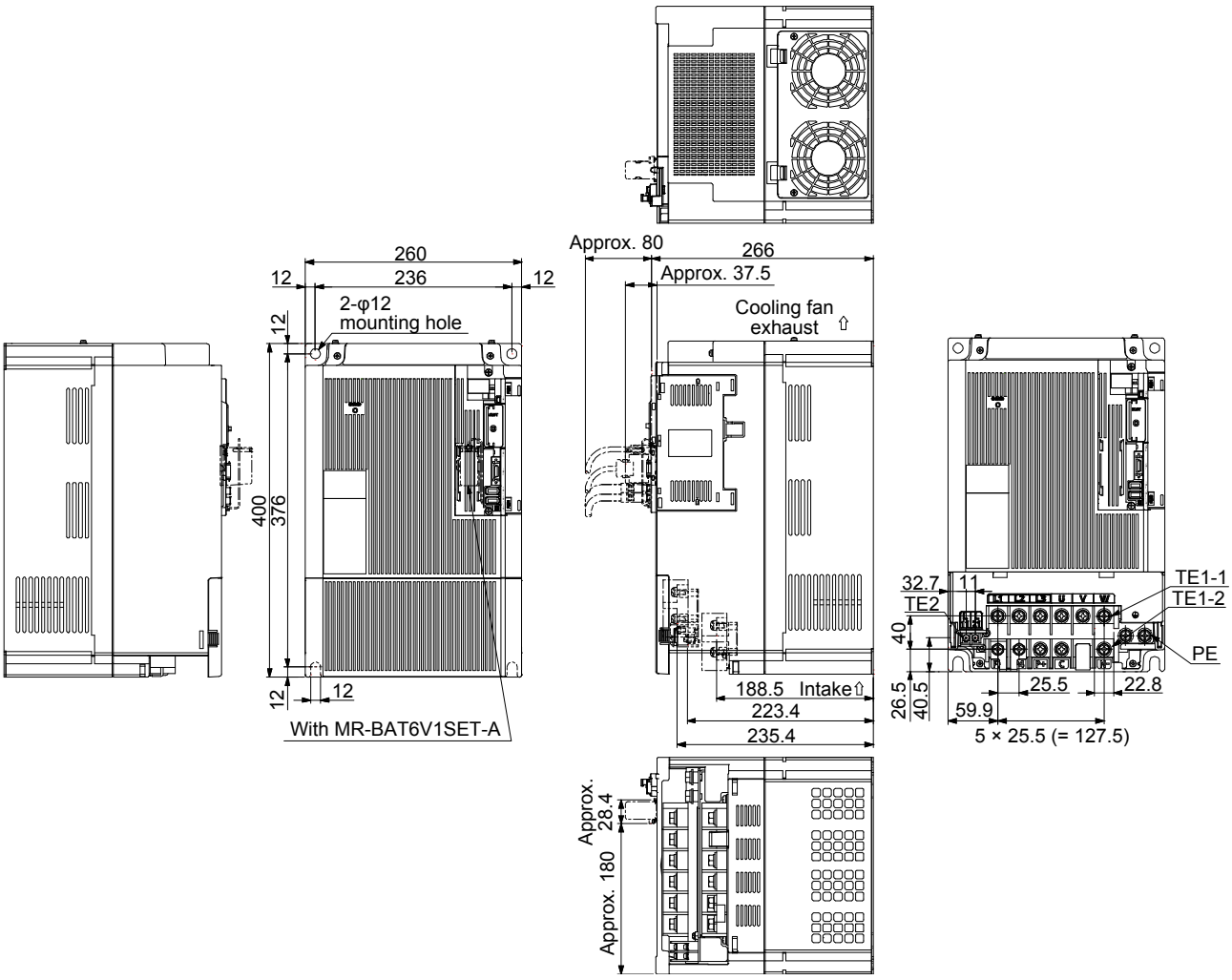

Mass: 18.2 [kg]

Terminal

TE1-1 L1 L2 L3 U V W

TE1-2 P3 P4 P+ C N-

PE TE2 L11 L21

TE1-1 Screw size: M8
Tightening torque: 6.0 [N•m]

TE1-2 Screw size: M8
Tightening torque: 6.0 [N•m]

TE2 Screw size: M4
Tightening torque: 1.2 [N•m]

PE Screw size: M8
Tightening torque: 6.0 [N•m]

Mounting screw
Screw size: M10
Tightening torque: 26.5 [N•m]

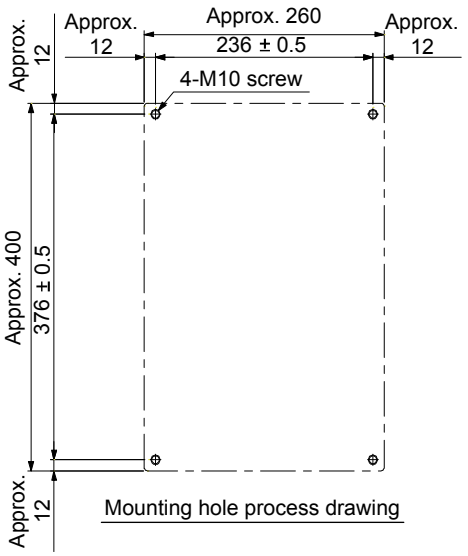

Mounting hole process drawing

(2) 400 V class

(a) MR-J4-60TM4/MR-J4-100TM4

[Unit: mm]

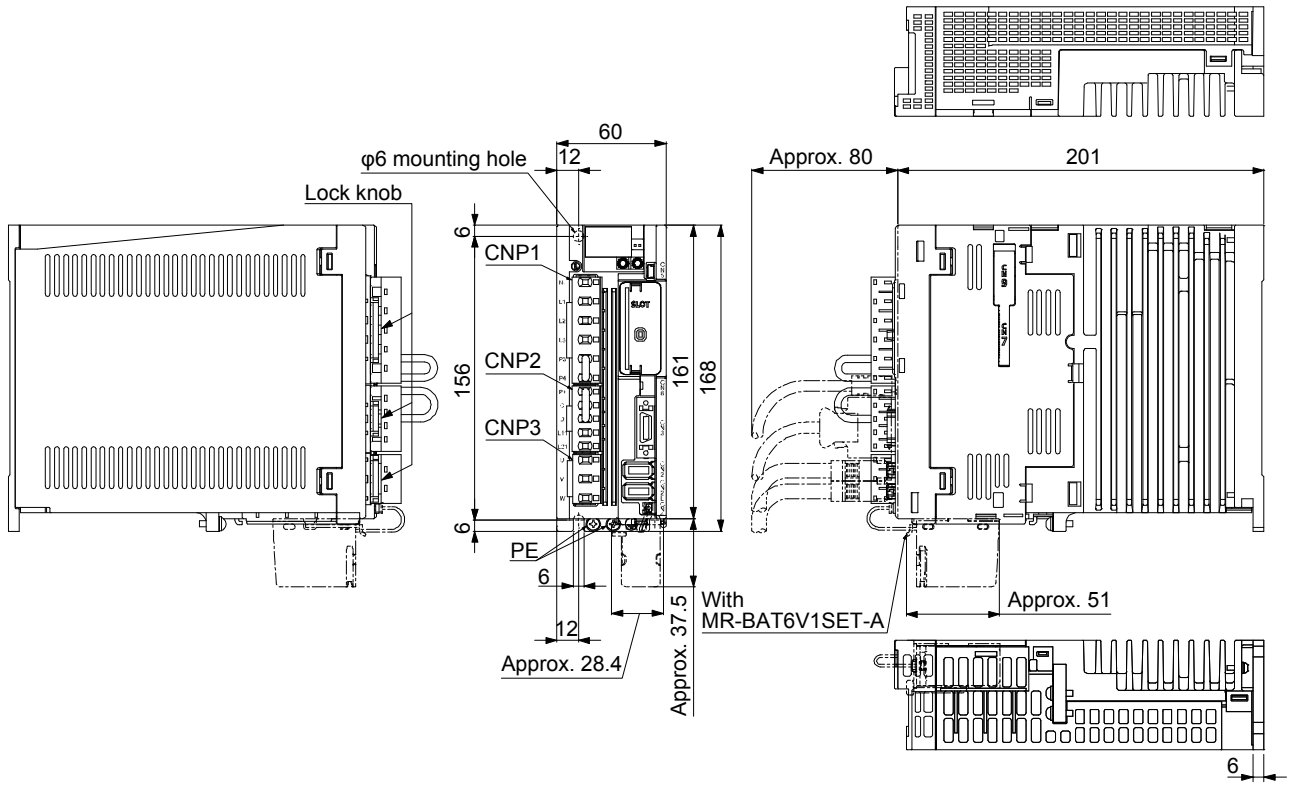

Mass: 1.7 [kg]

Mounting screw
Screw size: M5
Tightening torque: 3.24 [N•m]

Terminal

CNP1
N-
L1
L2
L3
P3
P4

CNP2
P+
C
D
L11
L21

CNP3
U
V
W

PE

Screw size: M4
Tightening torque: 1.2 [N•m]

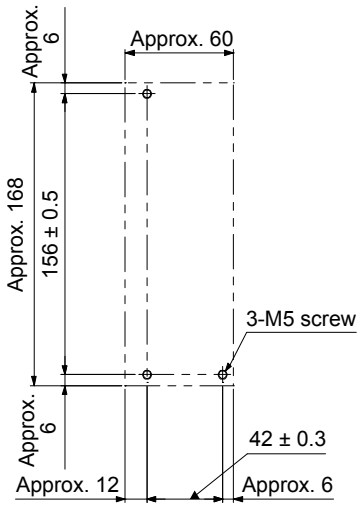

Mounting hole process drawing

(b) MR-J4-200TM4

[Unit: mm]

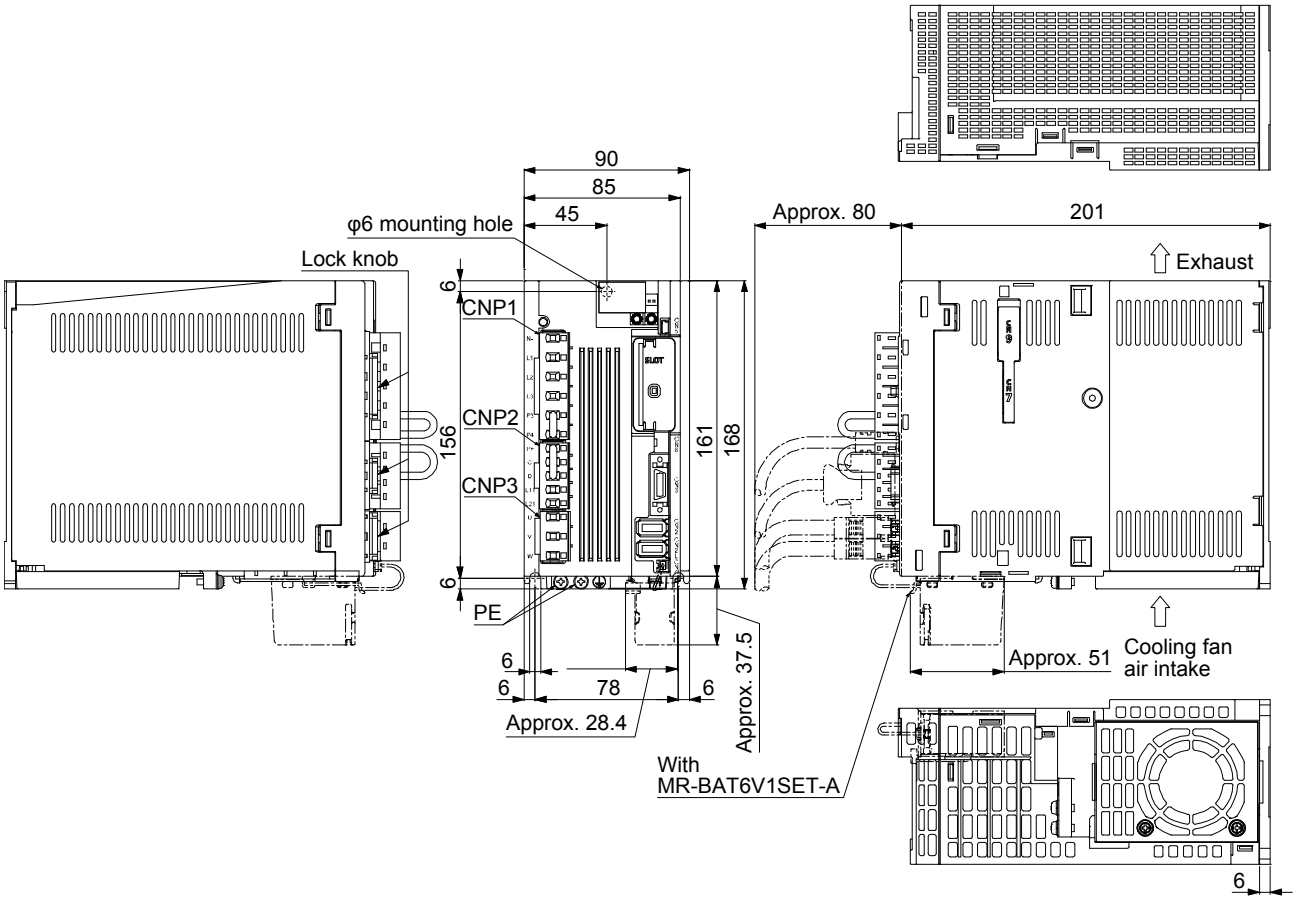

Mass: 2.1 [kg]

Mounting screw
Screw size: M5
Tightening torque: 3.24 [N•m]

Terminal

CNP1
N-
L1
L2
L3
P3
P4

CNP2
P+
C
D
L11
L21

CNP3
U
V
W

PE

Screw size: M4
Tightening torque: 1.2 [N•m]

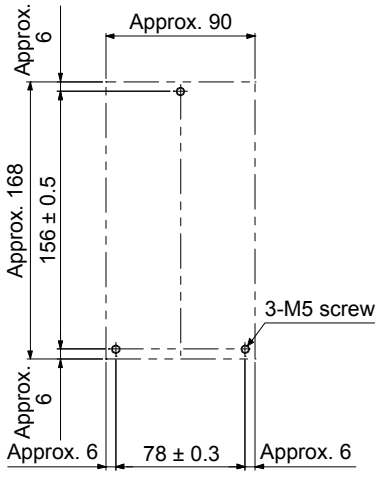

Mounting hole process drawing

(c) MR-J4-350TM4

[Unit: mm]

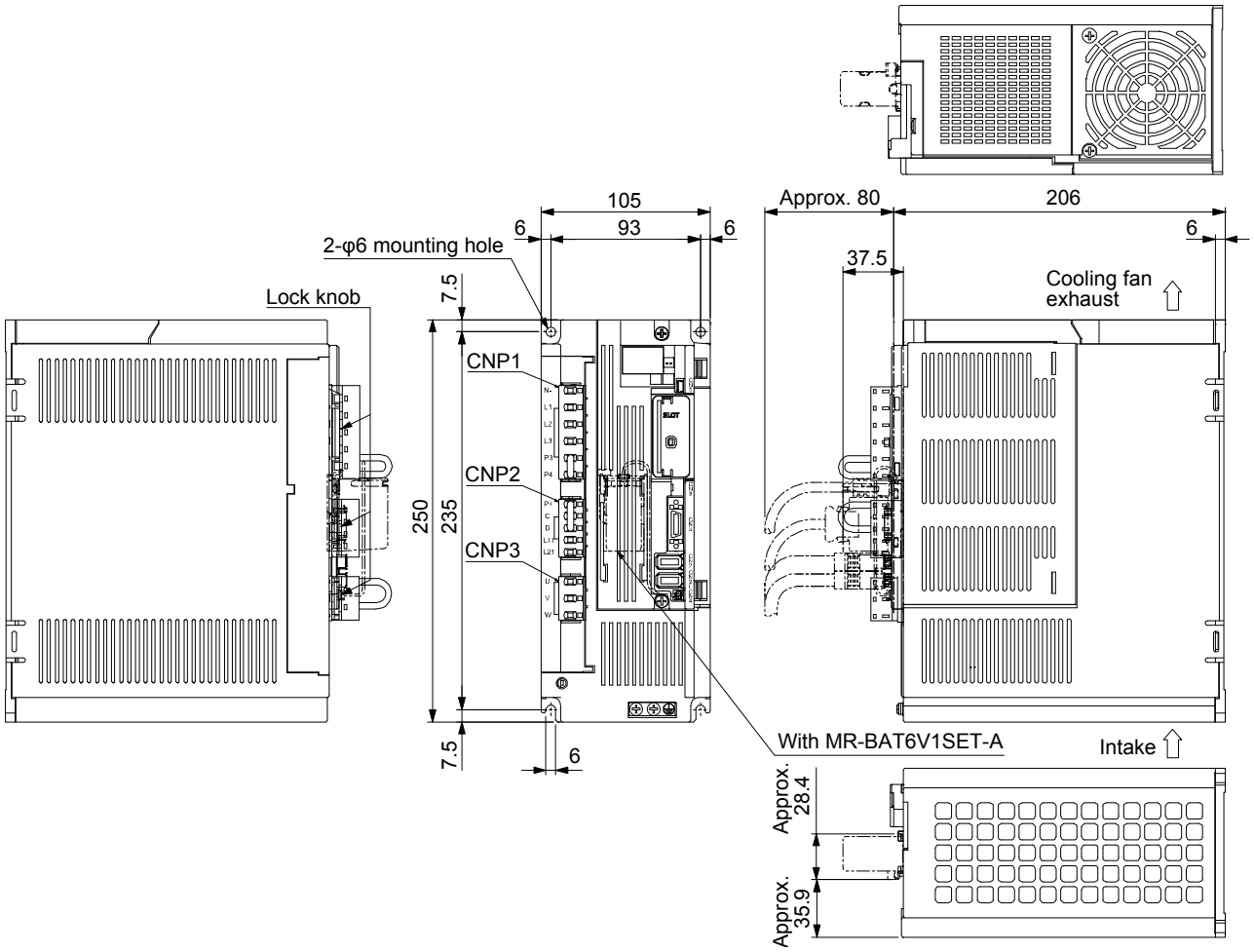

Mass: 3.6 [kg]

Mounting screw
Screw size: M5
Tightening torque: 3.24 [N•m]

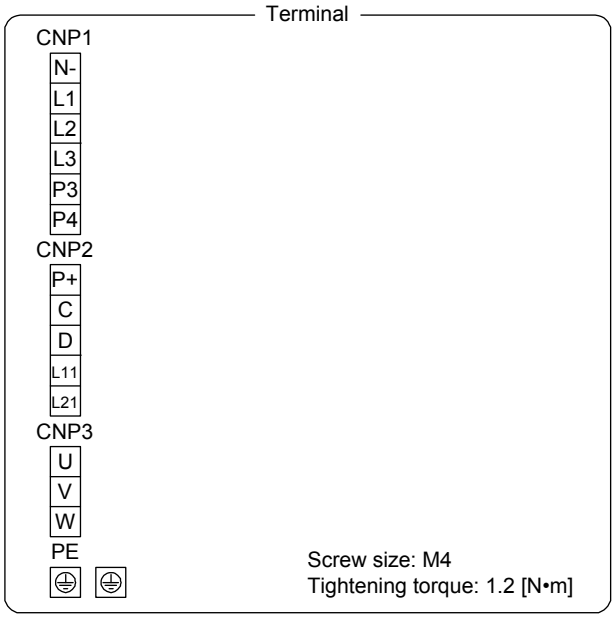

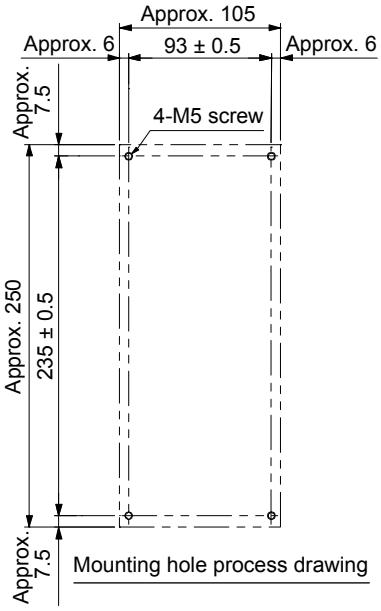

(d) MR-J4-500TM4

[Unit: mm]

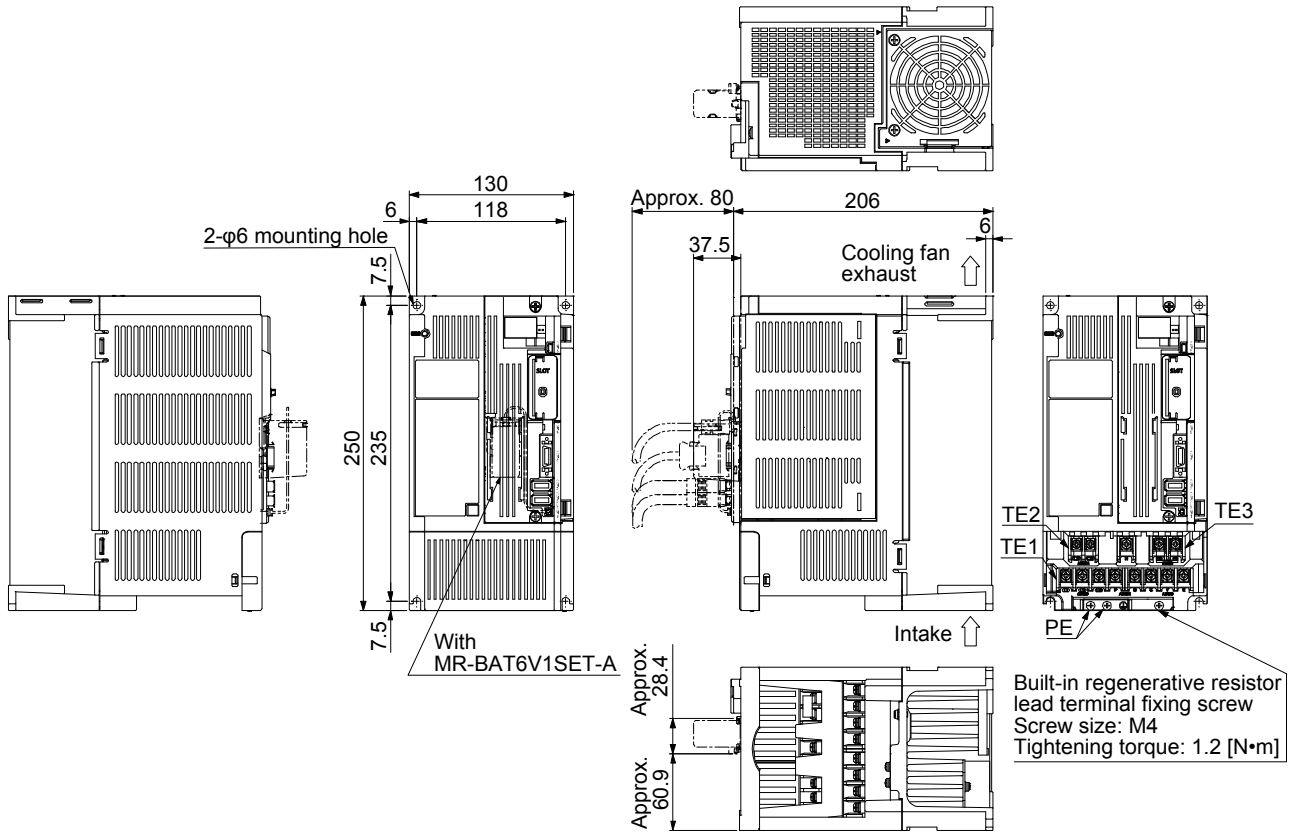

Mass: 4.3 [kg]

Mounting screw
Screw size: M5
Tightening torque: 3.24 [N•m]

Terminal

TE2 L11 L21 TE3 N- P3 P4

TE1 L1 L2 L3 P+ C U V W

PE

TE2 Terminal screw: M3.5
Tightening torque: 0.8 [N•m]

TE3 Terminal screw: M4
Tightening torque: 1.2 [N•m]

TE1 Terminal screw: M4
Tightening torque: 1.2 [N•m]

PE Screw size: M4
Tightening torque: 1.2 [N•m]

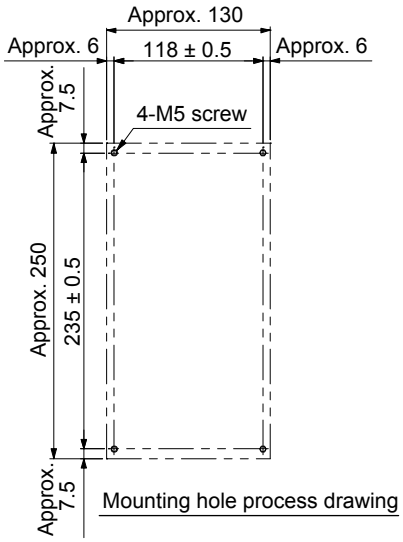

(e) MR-J4-700TM4

[Unit: mm]

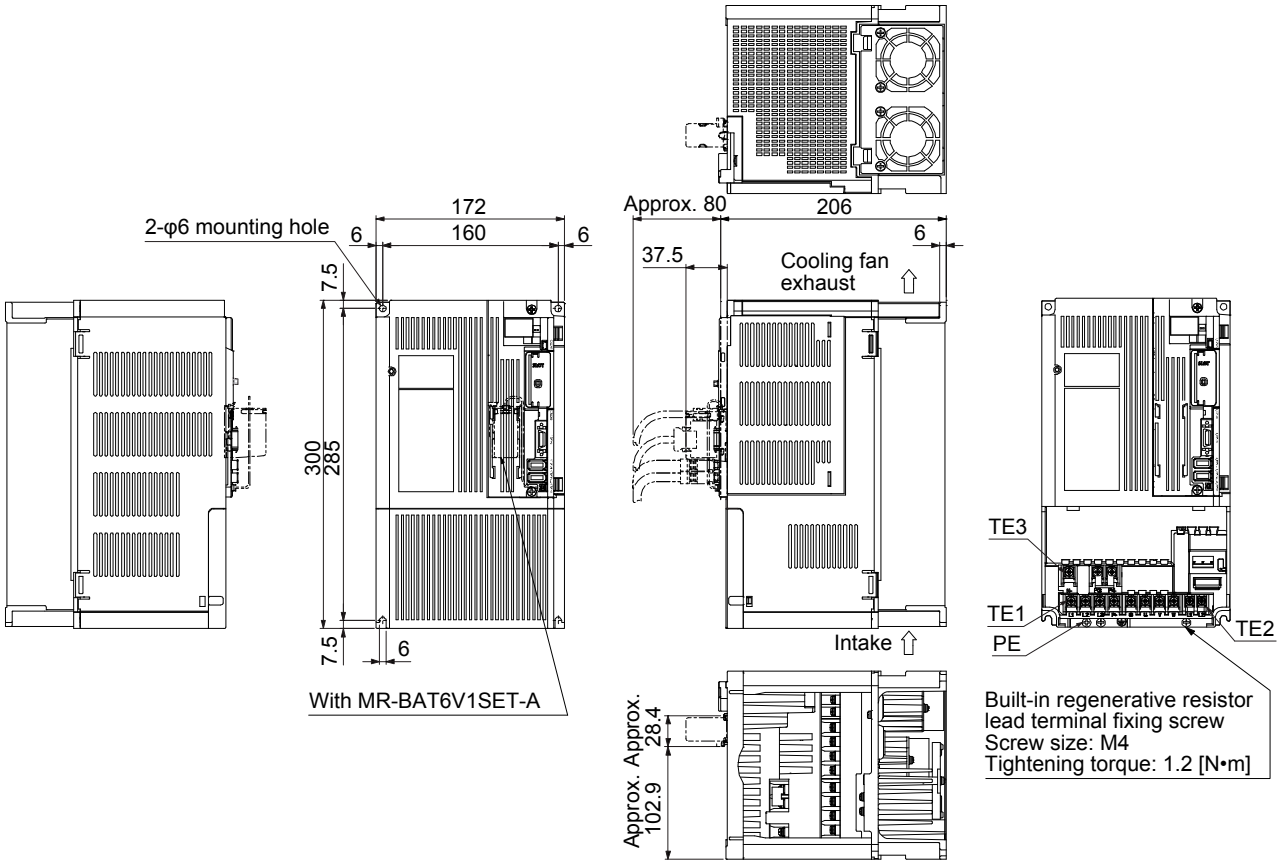

Mass: 6.5 [kg]

Mounting screw
Screw size: M5
Tightening torque: 3.24 [N•m]

Terminal

TE3 N- P3 P4

TE1 L1 L2 L3 P+ C U V W TE2 L11 L21

PE

TE3 Screw size: M4
Tightening torque: 1.2 [N•m]

TE1 Screw size: M4
Tightening torque: 1.2 [N•m]

TE2 Screw size: M3.5
Tightening torque: 0.8 [N•m]

PE Screw size: M4
Tightening torque: 1.2 [N•m]

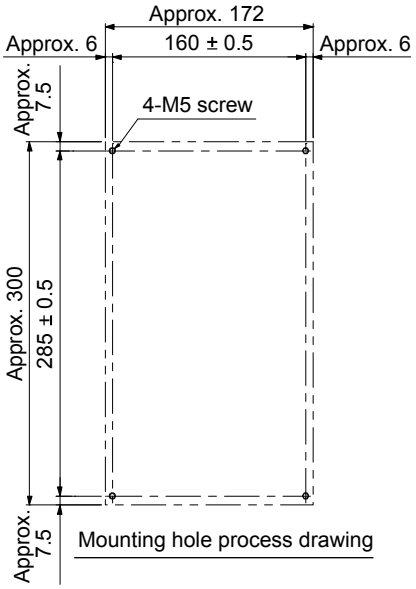

(f) MR-J4-11TKM4/MR-J4-15KTM4

[Unit: mm]

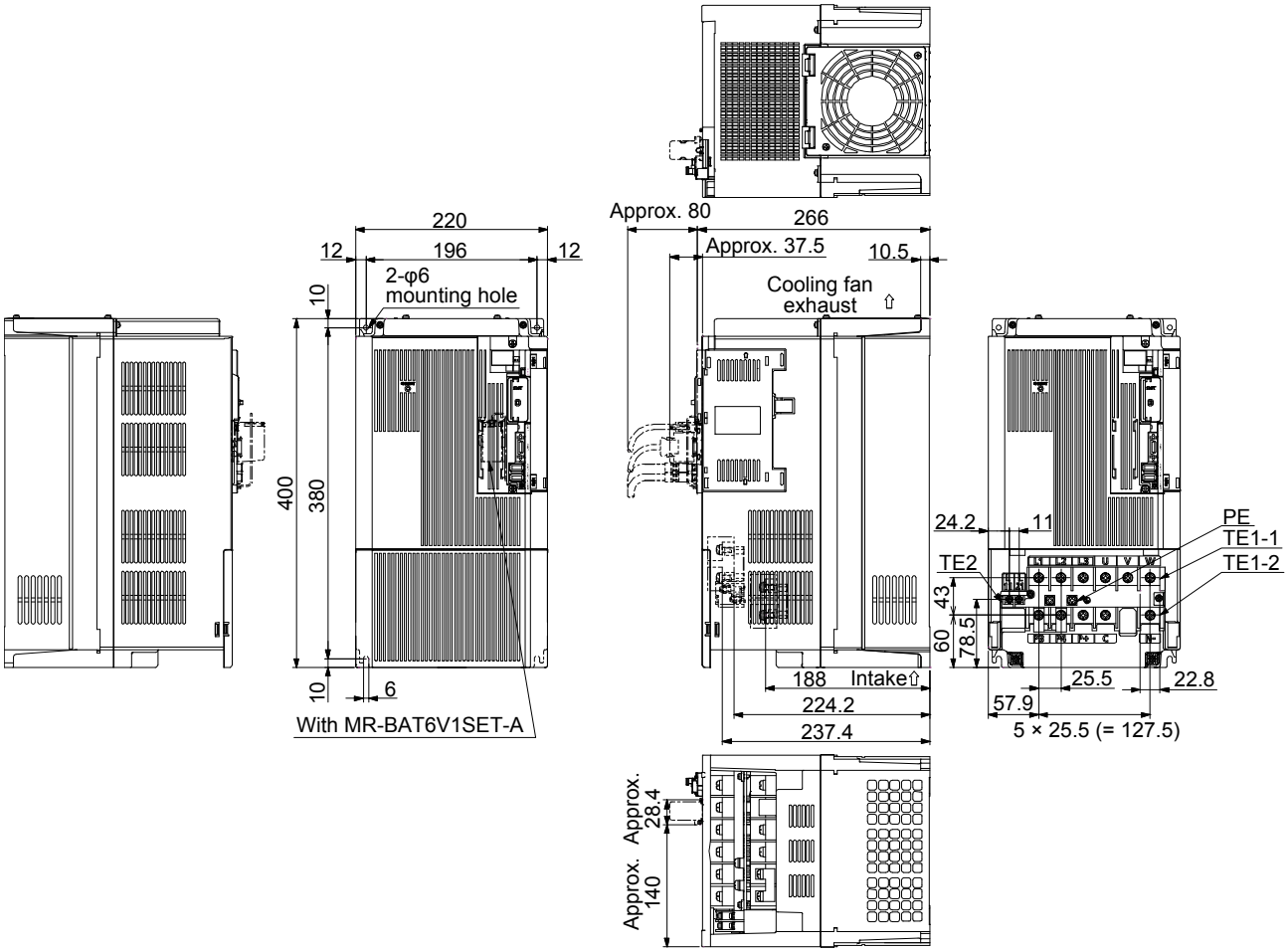

Mass: 13.4 [kg]

Terminal

TE1-1 L1 L2 L3 U V W

TE1-2 P3 P4 P+ C N-

TE2 L11 L21

PE

TE1-1 Screw size: M6
Tightening torque: 3.0 [N•m]

TE1-2 Screw size: M6
Tightening torque: 3.0 [N•m]

TE2 Screw size: M4
Tightening torque: 1.2 [N•m]

PE Screw size: M6
Tightening torque: 3.0 [N•m]

Mounting screw
Screw size: M5
Tightening torque: 3.24 [N•m]

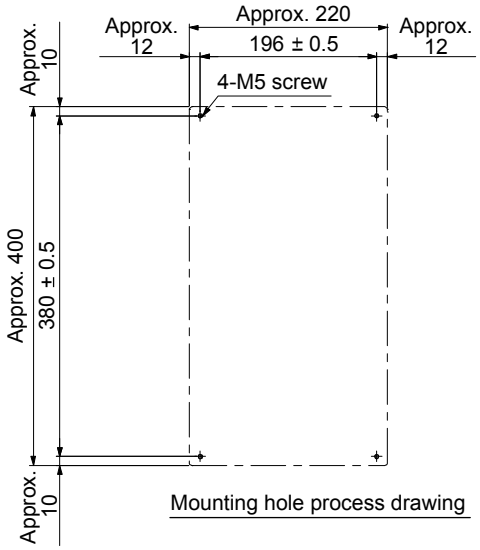

Mounting hole process drawing

(g) MR-J4-22KTM4

[Unit: mm]

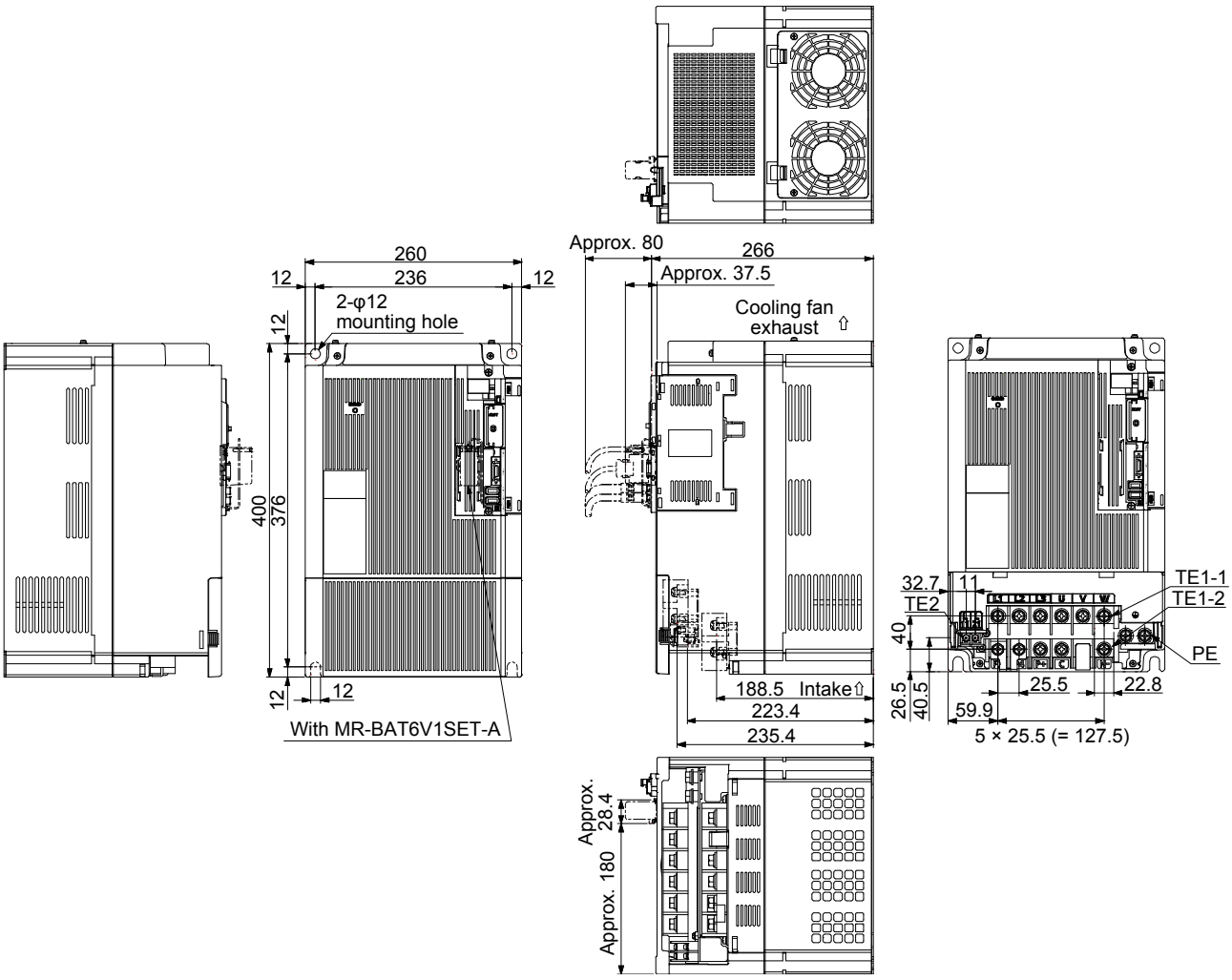

Mass: 18.2 [kg]

Terminal

TE1-1 L1 L2 L3 U V W

TE1-2 P3 P4 P+ C N-

PE TE2 L11 L21

TE1-1 Screw size: M8
Tightening torque: 6.0 [N•m]

TE1-2 Screw size: M8
Tightening torque: 6.0 [N•m]

TE2 Screw size: M4
Tightening torque: 1.2 [N•m]

PE Screw size: M8
Tightening torque: 6.0 [N•m]

Mounting screw
Screw size: M10
Tightening torque: 26.5 [N•m]

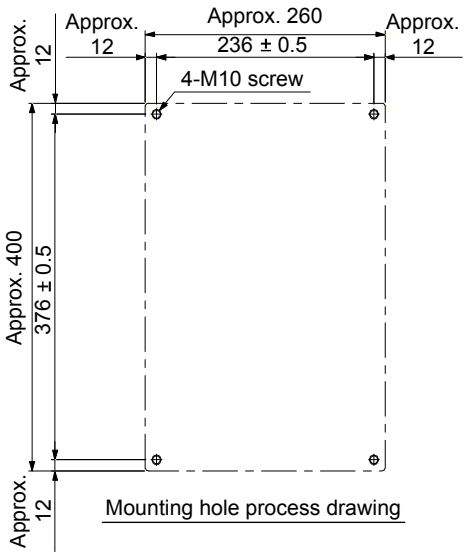

Mounting hole process drawing

(3) 100 V class

[Unit: mm]

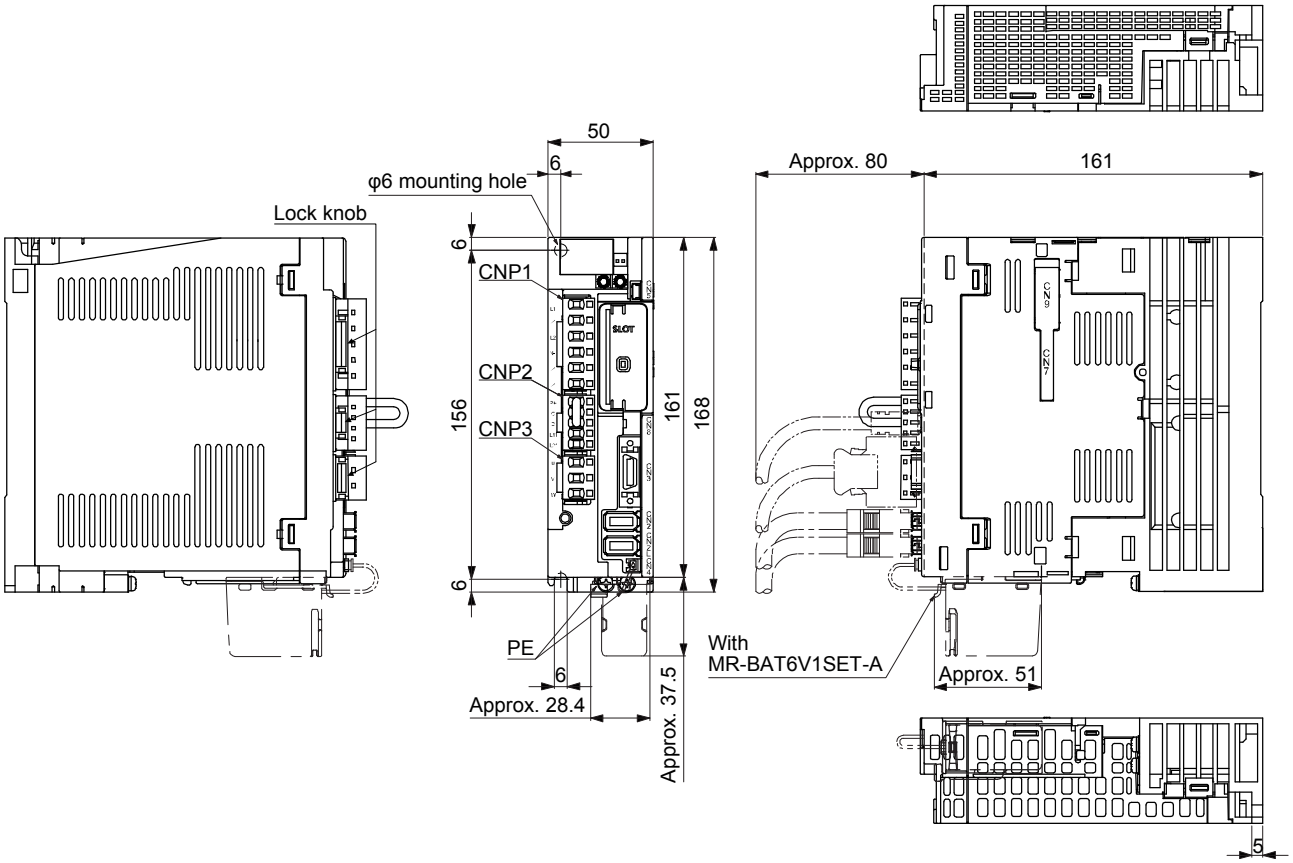

Mass: 1.0 [kg]

Mounting screw
Screw size: M5
Tightening torque: 3.24 [N•m]

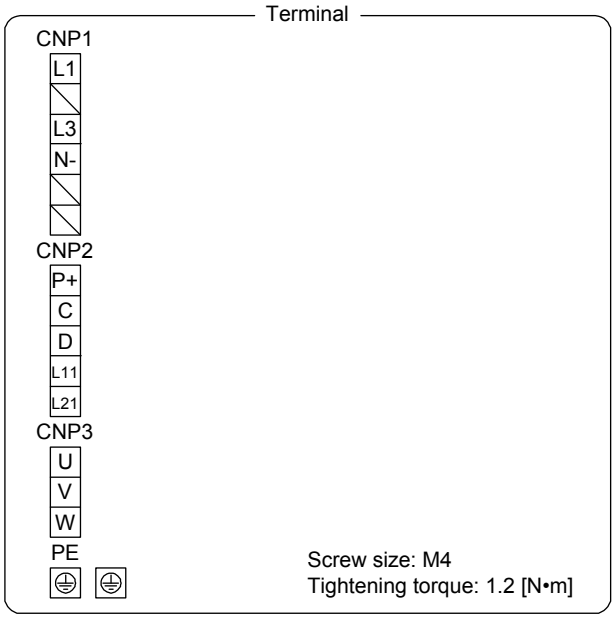

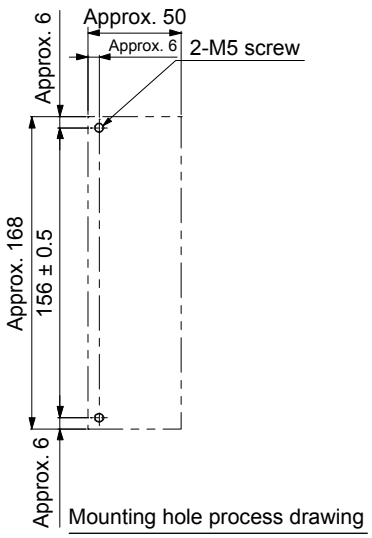

9.2 Connector

(1) Miniature delta ribbon (MDR) system (3M)

(a) One-touch lock type

[Unit: mm]

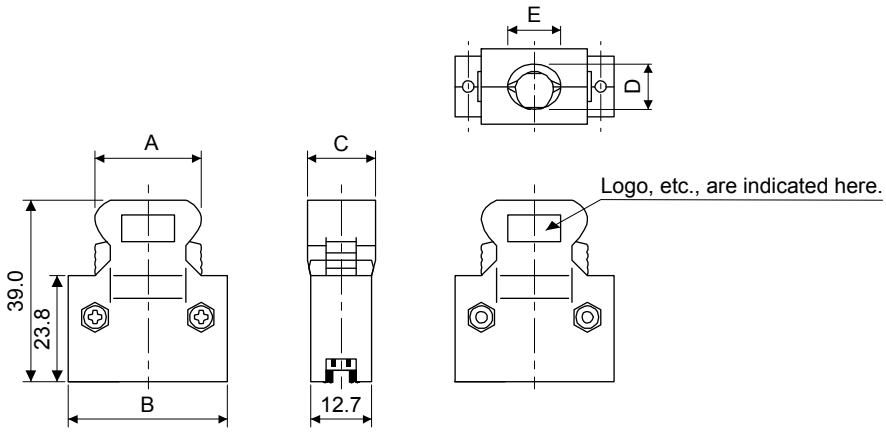

Connector	Shell kit	Each type of dimension				
		A	B	C	D	E
10120-3000PE	10320-52F0-008	22.0	33.3	14.0	10.0	12.0

(b) Jack screw M2.6 type

This is not available as option.

[Unit: mm]

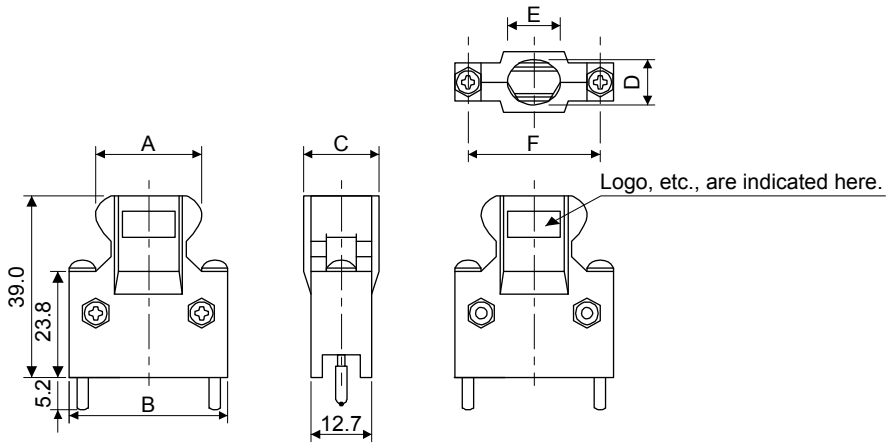

Connector	Shell kit	Each type of dimension					
		A	B	C	D	E	F
10120-3000PE	10320-52F0-008	22.0	33.3	14.0	10.0	12.0	27.4

(2) SCR connector system (3M)
Receptacle: 36210-0100PL
Shell kit: 36310-3200-008

[Unit: mm]

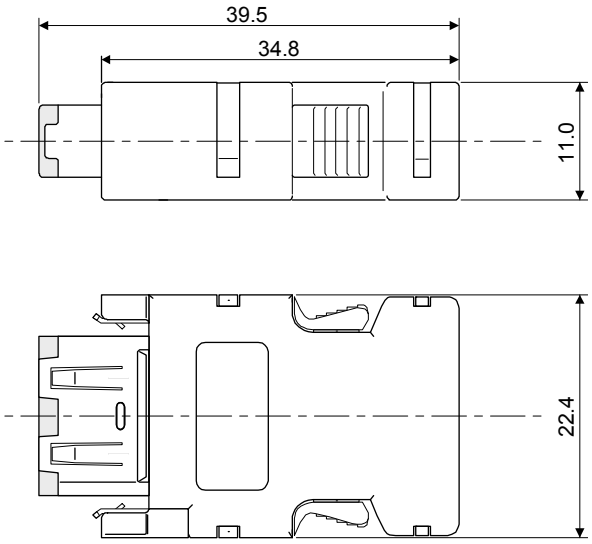

10. CHARACTERISTICS

POINT
●For the characteristics of the linear servo motor and the direct drive motor, refer to sections 14.4 and 15.4.

10.1 Overload protection characteristics

An electronic thermal is built in the servo amplifier to protect the servo motor, servo amplifier and servo motor power wires from overloads.
[AL. 50 Overload 1] occurs if overload operation performed is above the electronic thermal protection curve shown in fig. 10.1 [AL. 51 Overload 2] occurs if the maximum current is applied continuously for several seconds due to machine collision, etc. Use the equipment on the left-hand side area of the continuous or broken line in the graph.
When unbalanced torque is generated, such as in a vertical lift machine, the unbalanced torque of the machine should be kept at 70% or lower of the motor's rated torque.
This servo amplifier has solid-state servo motor overload protection. (The servo motor overload current (full load current) is set on the basis of 120% rated current of the servo amplifier.)

The following table shows combinations of each servo motor and graph of overload protection characteristics.

Rotary servo motor							Graph of overload protection characteristics
HG-KR	HG-MR	HG-SR	HG-UR	HG-RR	HG-JR	HG-JR (When the maximum torque is 400%)	
053 13	053 13		72				Characteristics a
23 43 73	23 43 73	51 81 52 102			53 73 103	53	Characteristics b
		121 201 152 202 301 352	152 202	103 153 203	153 203 353	73 103 153 203	Characteristics c
		421 502 702	352 502	353 503	601 701M 503 703	353 503	Characteristics d
					801 12K1 15K1 20K1 25K1 11K1M 15K1M 22K1M 903		Characteristics e
		524 1024			534 734 1034	534	Characteristics b
		1524 2024 3524			1534 2034 3534	734 1034 1534 2034	Characteristics c
		5024 7024			6014 701M4 5034 7034	3534 5034	Characteristics d
					8014 12K14 15K14 20K14 25K14 11K1M4 15K1M4 22K1M4 9034		Characteristics e

The following graphs show overload protection characteristics.

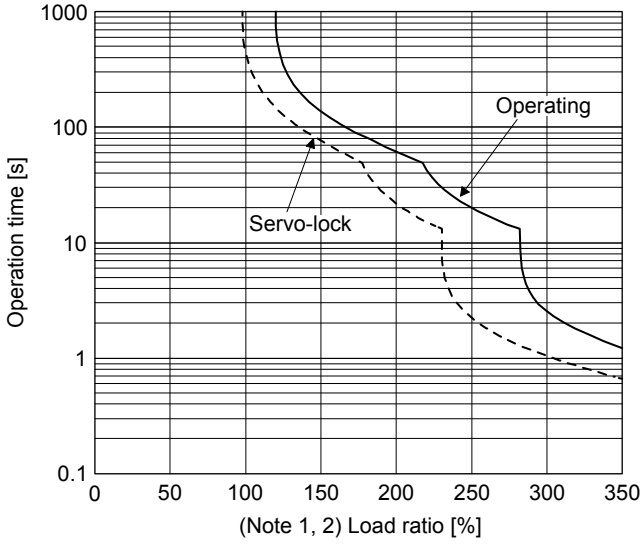

Characteristics a

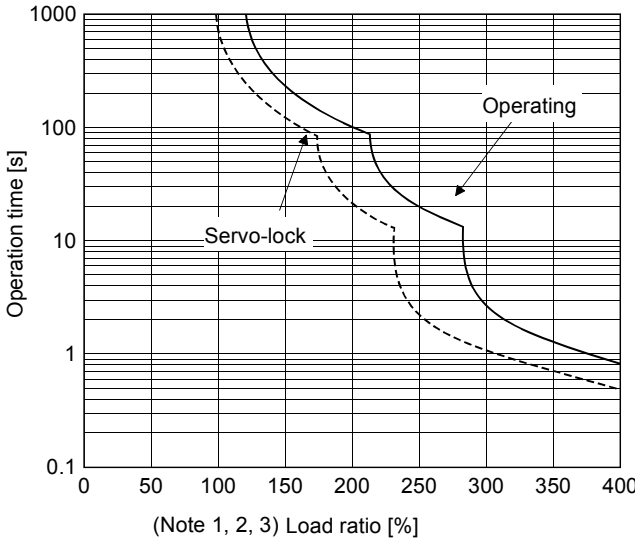

Characteristics b

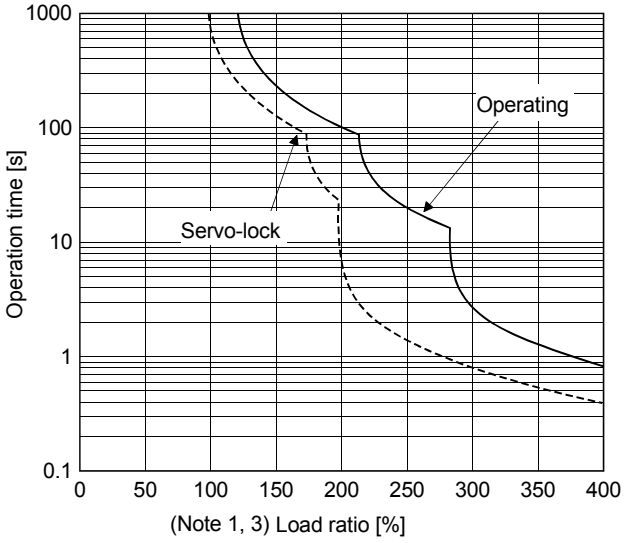

Characteristics c

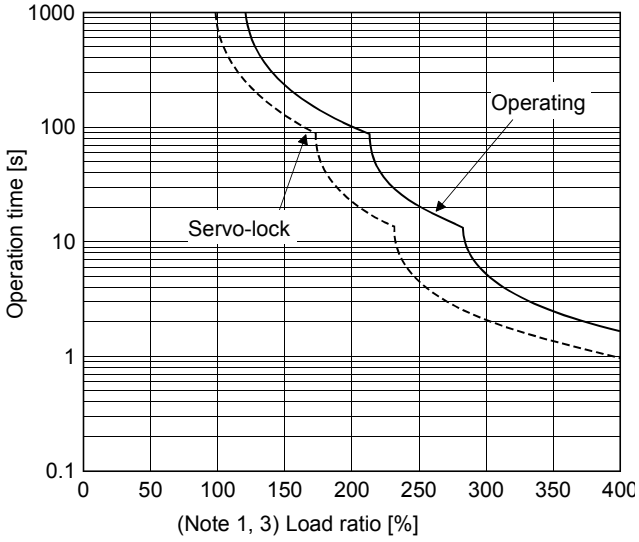

Characteristics d

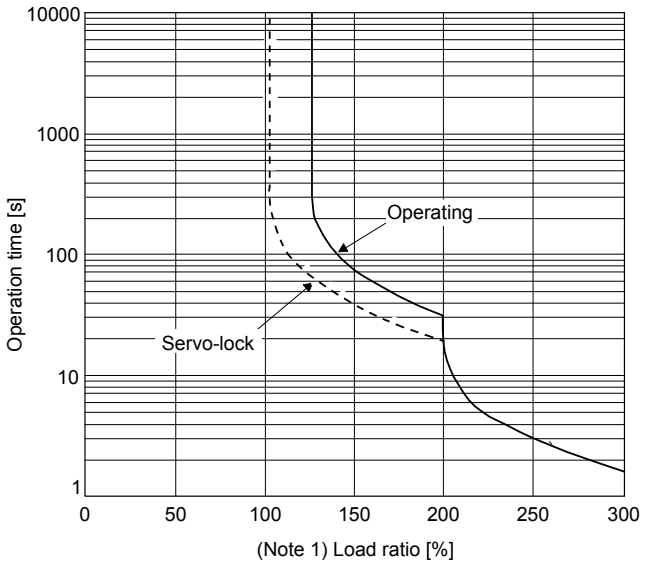

Characteristics e

Note 1. If operation that generates torque more than 100% of the rating is performed with an abnormally high frequency in a servo motor stop status (servo-lock status) or in a 50 r/min or less low-speed operation status, the servo amplifier may malfunction regardless of the electronic thermal protection.

2. The load ratio ranging from 300% to 350% applies to the HG-KR servo motor.

3. The operation time at the load ratio of 300% to 400% applies when the maximum torque of HG-JR servo motor is increased to 400% of rated torque.

Fig. 10.1 Electronic thermal protection characteristics

10.2 Power supply capacity and generated loss

(1) Amount of heat generated by the servo amplifier

Table 10.1 indicates servo amplifiers' power supply capacities and losses generated under rated load. For thermal design of an enclosed type cabinet, use the values in the table in consideration for the worst operating conditions. The actual amount of generated heat will be intermediate between values at rated torque and servo-off according to the duty used during operation. When the servo motor is run at less than the rated speed, the power supply capacity will be smaller than the value in the table, but the servo amplifier's generated heat will not change.

Table 10.1 Power supply capacity and generated loss per servo motor at rated output

Servo amplifier	Servo motor	(Note 1) Power supply capacity [kVA]	(Note 2) Servo amplifier-generated heat [W]			Area required for heat dissipation [m²]
			At rated output	At rated output [Generated heat in the cabinet when cooled outside the cabinet] (Note 3)	With servo-off	
MR-J4-10TM	HG-MR053	0.3	25		15	0.5
	HG-MR13	0.3	25		15	0.5
	HG-KR053	0.3	25		15	0.5
	HG-KR13	0.3	25		15	0.5
MR-J4-20TM	HG-MR23	0.5	25		15	0.5
	HG-KR23	0.5	25		15	0.5
MR-J4-40TM	HG-MR43	0.9	35		15	0.7
	HG-KR43	0.9	35		15	0.7
MR-J4-60TM	HG-SR52	1.0	40		15	0.8
	HG-SR51	1.0	40		15	0.8
	HG-JR53	1.0	40		15	0.8
MR-J4-70TM	HG-MR73	1.3	50		15	1.0
	HG-KR73	1.3	50		15	1.0
	HG-UR72	1.3	50		15	1.0
	HG-JR73	1.3	50		15	1.0
MR-J4-100TM	HG-SR102	1.7	50		15	1.0
	HG-SR81	1.5	50		15	1.0
	HG-JR103	1.7	50		15	1.0
MR-J4-200TM	HG-SR152	2.5	90		20	1.8
	HG-SR202	3.5	90		20	1.8
	HG-SR121	2.1	90		20	1.8
	HG-SR201	3.5	90		20	1.8
	HG-RR103	1.7	50		15	1.0
	HG-RR153	2.5	90		20	1.8
	HG-UR152	2.5	90		20	1.8
	HG-JR153	2.5	90		20	1.8
	HG-JR203	3.5	90		20	1.8
MR-J4-350TM	HG-SR352	5.5	130		20	2.6
	HG-SR301	4.8	120		20	2.4
	HG-RR203	3.5	90		20	1.8
	HG-UR202	3.5	90		20	1.8
	HG-JR353	5.5	160		20	2.7
MR-J4-500TM	HG-SR502	7.5	195		25	3.9
	HG-SR421	6.3	160		25	3.2
	HG-RR353	5.5	135		25	2.7
	HG-RR503	7.5	195		25	3.9
	HG-UR352	5.5	195		25	3.9
	HG-UR502	7.5	195		25	3.9
	HG-JR503	7.5	195		25	3.9
MR-J4-700TM	HG-SR702	10	300		25	6.0
	HG-JR703	10	300		25	6.0
	HG-JR701M	10	300		25	6.0
	HG-JR601	8.6	250		25	5.0

Servo amplifier	Servo motor	(Note 1) Power supply capacity [kVA]	(Note 2) Servo amplifier-generated heat [W]			Area required for heat dissipation [m²]
			At rated output	At rated output [Generated heat in the cabinet when cooled outside the cabinet] (Note 3)	With servo-off	
MR-J4-11KTM	HG-JR903	13	435	130	45	8.7
	HG-JR11K1M	16	530	160	45	11.0
	HG-JR801	12	370	110	45	7.0
	HG-JR12K1	18	570	170	45	11.5
MR-J4-15KTM	HG-JR15K1M	22	640	195	45	13.0
	HG-JR15K1	22	640	195	45	12.8
MR-J4-22KTM	HG-JR22K1M	33	850	260	55	17.0
	HG-JR20K1	30	800	240	55	16.0
	HG-JR25K1	38	900	270	55	19.0
MR-J4-60TM4	HG-SR524	1.0	40		18	0.8
	HG-JR534	1.0	40		18	0.8
MR-J4-100TM4	HG-SR1024	1.7	60		18	1.2
	HG-JR734	1.3	60		18	1.2
	HG-JR1034	1.7	60		18	1.2
MR-J4-200TM4	HG-SR1524	2.5	90		20	1.8
	HG-SR2024	3.5	90		20	1.8
	HG-JR1534	2.5	90		20	1.8
	HG-JR2034	3.5	90		20	1.8
MR-J4-350TM4	HG-SR3524	5.5	130		20	2.6
	HG-JR3534	5.5	160		20	2.7
MR-J4-500TM4	HG-SR5024	7.5	195		25	3.9
	HG-JR5034	7.5	195		25	3.9
MR-J4-700TM4	HG-SR7024	10	300		25	6.0
	HG-JR7034	10	300		25	6.0
	HG-JR701M4	10	300		25	6.0
	HG-JR6014	8.6	250		25	5.0
MR-J4-11KTM4	HG-JR9034	13	435	130	45	8.7
	HG-JR11K1M4	16	530	160	45	11.0
	HG-JR8014	12	370	110	45	7.0
	HG-JR12K14	18	570	170	45	11.5
MR-J4-15KTM4	HG-JR15K1M4	22	640	195	45	13.0
	HG-JR15K14	22	640	195	45	12.8
MR-J4-22KTM4	HG-JR22K1M4	33	850	260	55	17.0
	HG-JR20K14	30	800	240	55	16.0
	HG-JR25K14	38	900	270	55	19.0
MR-J4-10TM1	HG-MR053	0.3	25		15	0.5
	HG-MR13	0.3	25		15	0.5
	HG-KR053	0.3	25		15	0.5
	HG-KR13	0.3	25		15	0.5
MR-J4-20TM1	HG-MR23	0.5	25		15	0.5
	HG-KR23	0.5	25		15	0.5
MR-J4-40TM1	HG-MR43	0.9	35		15	0.7
	HG-KR43	0.9	35		15	0.7

Note 1. Note that the power supply capacity will vary according to the power supply impedance. This value is applicable when the power factor improving AC reactor or power factor improving DC reactor is not used.

2. Heat generated during regeneration is not included in the servo amplifier-generated heat. To calculate heat generated by the regenerative option, refer to section 11.2.

3. This value is applicable when the servo amplifier is cooled by using the panel through attachment.

(2) Heat dissipation area for an enclosed type cabinet

The enclosed type cabinet (hereafter called the cabinet) which will contain the servo amplifier should be designed to ensure that its temperature rise is within +10 °C at the ambient temperature of 40 °C. (With an approximately 5 °C safety margin, the system should operate within a maximum 55 °C limit.) The necessary cabinet heat dissipation area can be calculated by equation 10.1.

$$A = \frac{P}{K \cdot \Delta T} \quad \cdots\cdots (10.1)$$

A: Heat dissipation area [m^2]
P: Loss generated in the cabinet [W]
ΔT: Difference between internal and ambient temperatures [°C]
K: Heat dissipation coefficient [5 to 6]

When calculating the heat dissipation area with equation 10.1, assume that P is the sum of all losses generated in the cabinet. Refer to table 10.1 for heat generated by the servo amplifier. "A" indicates the effective area for heat dissipation, but if the cabinet is directly installed on an insulated wall, that extra amount must be added to the cabinet's surface area. The required heat dissipation area will vary with the conditions in the cabinet. If convection in the cabinet is poor and heat builds up, effective heat dissipation will not be possible. Therefore, arrangement of the equipment in the cabinet and the use of a cooling fan should be considered. Table 10.1 lists the cabinet dissipation area for each servo amplifier (guideline) when the servo amplifier is operated at the ambient temperature of 40 °C under rated load.

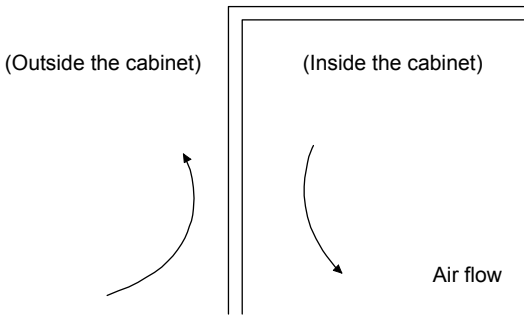

Fig. 10.2 Temperature distribution in an enclosed type cabinet

When air flows along the outer wall of the cabinet, effective heat exchange will be possible, because the temperature slope inside and outside the cabinet will be steeper.

10.3 Dynamic brake characteristics

⚠CAUTION	●The coasting distance is a theoretically calculated value which ignores the running load such as friction. The calculated value will be longer than the actual distance. If an enough braking distance is not provided, a moving part may crash into the stroke end, which is very dangerous. Install the anti-crash mechanism such as an air brake or an electric/mechanical stopper such as a shock absorber to reduce the shock of moving parts.

POINT

●Do not use dynamic brake to stop in a normal operation as it is the function to stop in emergency.

●For a machine operating at the recommended load to motor inertia ratio or less, the estimated number of usage times of the dynamic brake is 1000 times while the machine decelerates from the rated speed to a stop once in 10 minutes.

●Be sure to enable EM1 (Forced stop 1) after servo motor stops when using EM1 (Forced stop 1) frequently in other than emergency.

●Servo motors for MR-J4 may have the different coasting distance from that of the previous model.

●The electronic dynamic brake operates in the initial state for the HG series servo motors of 600 W or smaller capacity. The time constant "τ" for the electronic dynamic brake will be shorter than that of normal dynamic brake. Therefore, coasting distance will be longer than that of normal dynamic brake. For how to set the electronic dynamic brake, refer to [Pr. PF06] and [Pr. PF12].

10.3.1 Dynamic brake operation

(1) Calculation of coasting distance

Fig. 10.3 shows the pattern in which the servo motor comes to a stop when the dynamic brake is operated. Use equation 10.2 to calculate an approximate coasting distance to a stop. The dynamic brake time constant τ varies with the servo motor and machine operation speeds. (Refer to (2) (a), (b) in this section.)

A working part generally has a friction force. Therefore, actual coasting distance will be shorter than a maximum coasting distance calculated with the following equation.

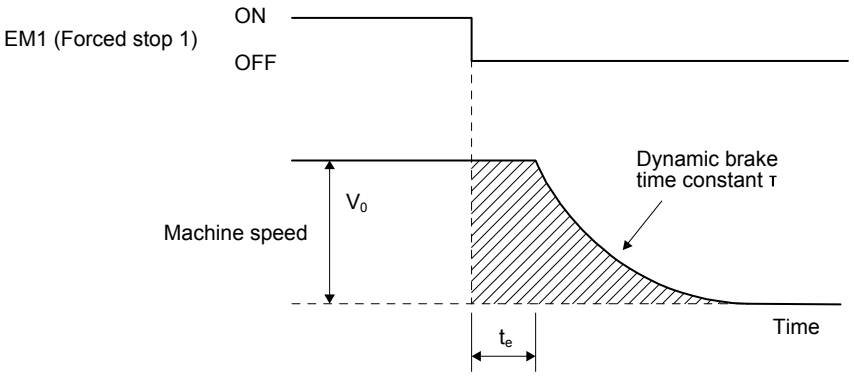

Fig. 10.3 Dynamic brake operation diagram

$$L_{max} = \frac{V_0}{60} \cdot \left\{ t_e + \tau \left(1 + \frac{J_L}{J_M} \right) \right\} \cdots\cdots (10.2)$$

L_{max}: Maximum coasting distance ·····[mm]
V_0: Machine's fast feed speed ····· [mm/min]
J_M: Moment of inertia of the servo motor·····[× 10^{-4} kg•m^2]
J_L: Load moment of inertia converted into equivalent value on servo motor shaft····· [× 10^{-4} kg•m^2]
τ: Dynamic brake time constant ····· [s]
t_e: Delay time of control section ····· [s]

For the servo amplifier of 7 kW or less, there is internal relay delay time of about 10 ms. For the servo amplifier of 11 kW to 22 kW, there is delay caused by magnetic contactor built into the external dynamic brake (about 50 ms) and delay caused by the external relay.

(2) Dynamic brake time constant

The following shows necessary dynamic brake time constant τ for equation 10.2.

(a) 200 V class

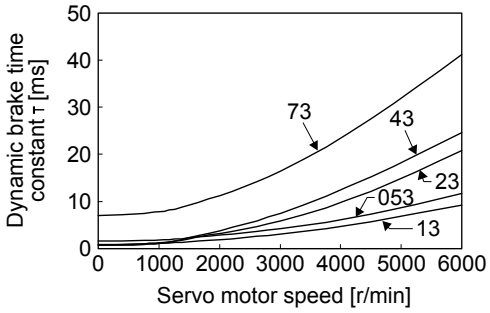

HG-MR series

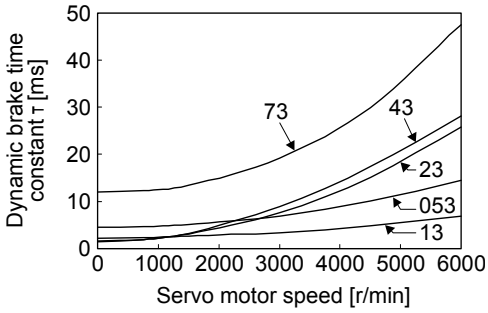

HG-KR series

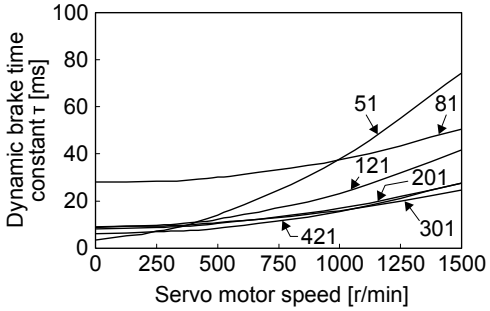

HG-SR 1000 r/min series

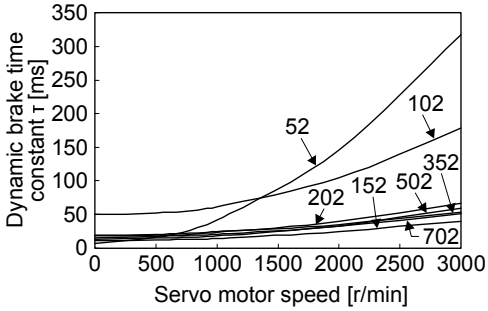

HG-SR 2000 r/min series

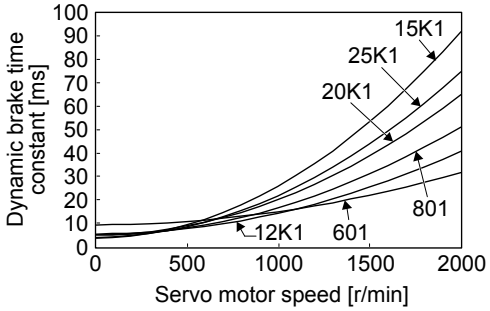

HG-JR1000 r/min series

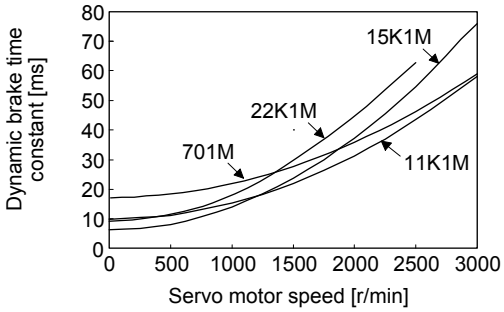

HG-JR1500 r/min series

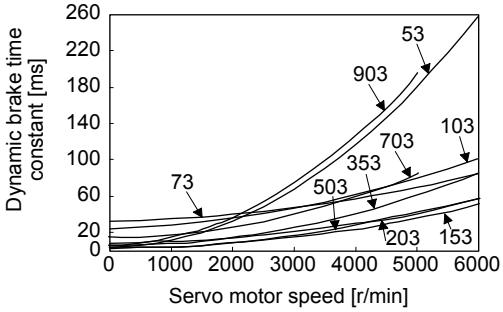

HG-JR3000 r/min series

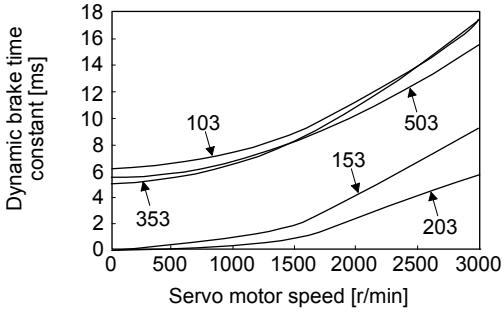

HG-RR series

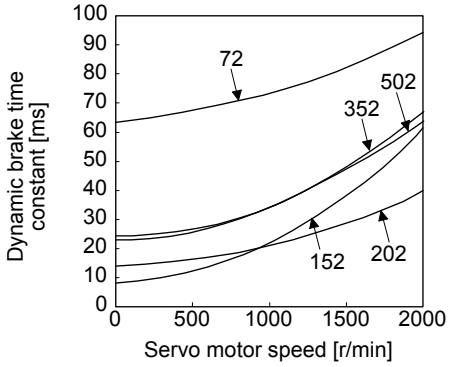

HG-UR series

(b) 400 V class

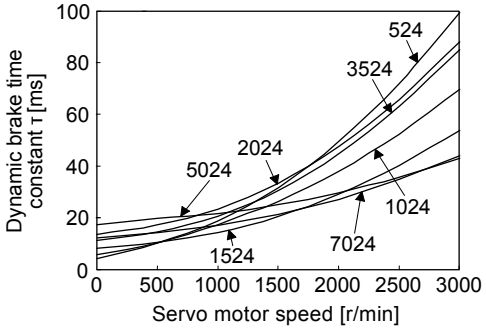

HG-SR series

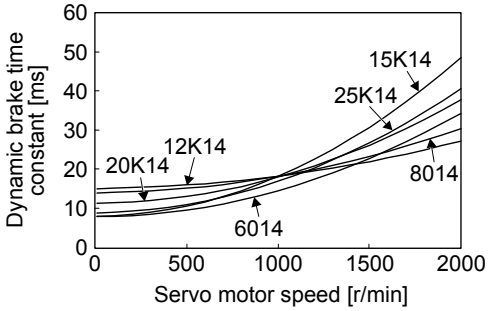

HG-JR1000 r/min series

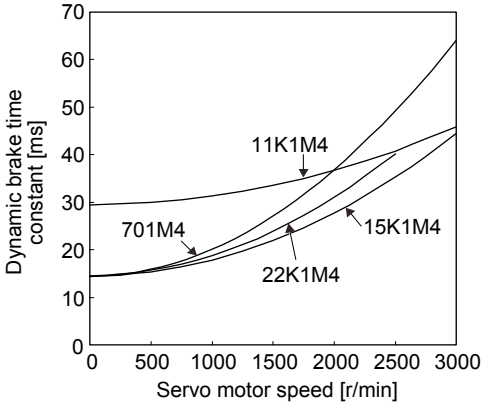

HG-JR1500 r/min series

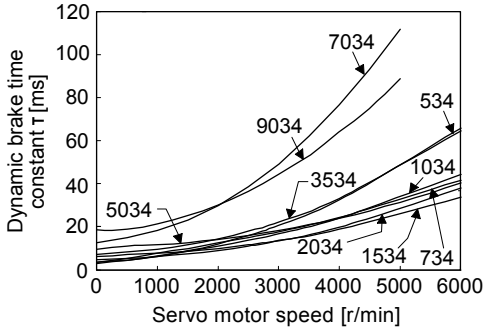

HG-JR3000 r/min series

10.3.2 Permissible load to motor inertia when the dynamic brake is used

Use the dynamic brake under the load to motor inertia ratio indicated in the following table. If the load inertia moment is higher than this value, the dynamic brake may burn. If the load to motor inertia ratio exceeds the indicated value, contact your local sales office.
The values of the permissible load to motor inertia ratio in the table are the values at the maximum rotation speed of the servo motor. The value in the parenthesis shows the value at the rated speed.

Servo motor	Permissible load to motor inertia ratio [multiplier]
HG-KR053	30
HG-KR13	
HG-KR23	
HG-KR43	
HG-KR73	
HG-MR053	35
HG-MR13	32
HG-MR23	
HG-MR43	
HG-MR73	
HG-SR51	30
HG-SR81	
HG-SR121	
HG-SR201	
HG-SR301	16
HG-SR421	15
HG-SR52	30
HG-SR102	
HG-SR152	21
HG-SR202	
HG-SR352	13 (15)
HG-SR502	
HG-SR702	5 (15)
HG-SR524	5 (15)
HG-SR1024	5 (17)
HG-SR1524	
HG-SR2024	5 (15)
HG-SR3524	
HG-SR5024	
HG-SR7024	
HG-UR72	30
HG-UR152	
HG-UR202	16
HG-UR352	
HG-UR502	15
HG-RR103	30
HG-RR153	
HG-RR203	16
HG-RR353	15
HG-RR503	

Servo motor	Permissible load to motor inertia ratio [multiplier]
HG-JR53	30
HG-JR73	
HG-JR103	
HG-JR153	
HG-JR203	
HG-JR353	16 (30)
HG-JR503	15 (30)
HG-JR703	11 (30)
HG-JR903	18 (30)
HG-JR701M	5
HG-JR11K1M	10 (30)
HG-JR15K1M	
HG-JR22K1M	20 (30)
HG-JR601	5
HG-JR801	30
HG-JR12K1	20 (30)
HG-JR15K1	17 (30)
HG-JR20K1	26 (30)
HG-JR25K1	21 (30)
HG-JR534	30 (30)
HG-JR734	
HG-JR1034	
HG-JR1534	
HG-JR2034	
HG-JR3534	20 (30) (Note)
HG-JR5034	15 (30)
HG-JR7034	11 (30)
HG-JR9034	18 (30)
HG-JR701M4	7 (10)
HG-JR11K1M4	10 (30)
HG-JR15K1M4	
HG-JR22K1M4	20 (30)
HG-JR6014	10
HG-JR8014	30
HG-JR12K14	20 (30)
HG-JR15K14	30 (30)
HG-JR20K14	26 (30)
HG-JR25K14	21 (30)

Note. When the maximum torque is increased to 400%, the permissible load to motor inertia ratio at the maximum speed of the servo motor is 25 times.

10.4 Cable bending life

The bending life of the cables is shown below. This graph calculated values. Since they are not guaranteed values, provide a little allowance for these values.

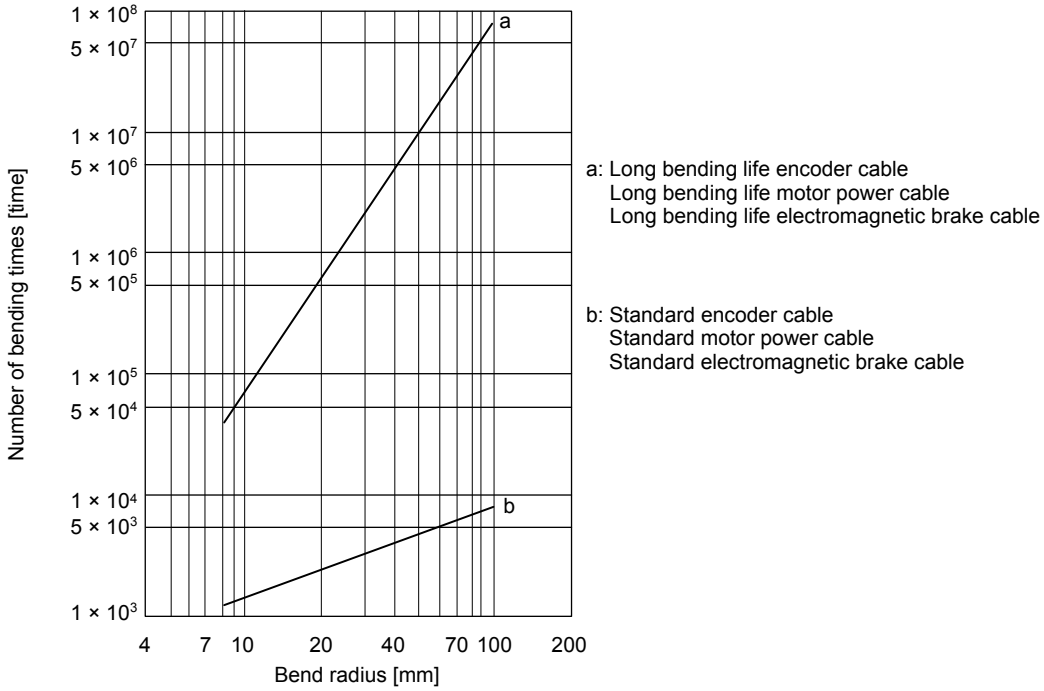

10.5 Inrush currents at power-on of main circuit and control circuit

POINT
●For a servo amplifier of 600 W or less, the inrush current values can change depending on frequency of turning on/off the power and ambient temperature.

Since large inrush currents flow in the power supplies, always use molded-case circuit breakers and magnetic contactors. (Refer to section 11.10.)
When circuit protectors are used, it is recommended that the inertia delay type, which is not tripped by an inrush current, be used.

(1) 200 V class
The following shows the inrush currents (reference data) that will flow when 240 V AC servo amplifier) is applied at the power supply capacity of 2500 kVA and the wiring length of 1 m. Even when you use a 1-phase 200 V AC power supply with MR-J4-10TM to MR-J4-200TM, the inrush currents of the main circuit power supply is the same.

<table>
<tr><th rowspan="2">Servo amplifier</th><th colspan="2">Inrush currents (A_{0-P})</th></tr>
<tr><th>Main circuit power supply (L1/L2/L3)</th><th>Control circuit power supply (L11/L21)</th></tr>
<tr><td>MR-J4-10TM
MR-J4-20TM
MR-J4-40TM
MR-J4-60TM</td><td>30 A (attenuated to approx. 3 A in 20 ms)</td><td rowspan="3">20 A to 30 A
(attenuated to approx. 1 A in 20 ms)</td></tr>
<tr><td>MR-J4-70TM
MR-J4-100TM</td><td>34 A (attenuated to approx. 7 A in 20 ms)</td></tr>
<tr><td>MR-J4-200TM
MR-J4-350TM</td><td>113 A (attenuated to approx. 12 A in 20 ms)</td></tr>
<tr><td>MR-J4-500TM</td><td>42 A (attenuated to approx. 20 A in 20 ms)</td><td rowspan="2">34 A
(attenuated to approx. 2 A in 20 ms)</td></tr>
<tr><td>MR-J4-700TM</td><td>85 A (attenuated to approx. 20 A in 30 ms)</td></tr>
<tr><td>MR-J4-11KTM</td><td>226 A (attenuated to approx. 30 A in 30 ms)</td><td rowspan="3">42 A
(attenuated to approx. 2 A in 30 ms)</td></tr>
<tr><td>MR-J4-15KTM</td><td>226 A (attenuated to approx. 50 A in 30 ms)</td></tr>
<tr><td>MR-J4-22KTM</td><td>226 A (attenuated to approx. 70 A in 30 ms)</td></tr>
</table>

(2) 400 V class

The following shows the inrush currents (reference data) that will flow when 480 V AC is applied at the power supply capacity of 2500 kVA and the wiring length of 1 m.

Servo amplifier	Inrush currents (A_{0-P})	
	Main circuit power supply (L1/L2/L3)	Control circuit power supply (L11/L21)
MR-J4-60TM4 MR-J4-100TM4	65 A (attenuated to approx. 5 A in 10 ms)	40 A to 50 A (attenuated to approx. 0 A in 2 ms)
MR-J4-200TM4	80 A (attenuated to approx. 5 A in 10 ms)	
MR-J4-350TM4	100 A (attenuated to approx. 20 A in 10 ms)	
MR-J4-500TM4	65 A (attenuated to approx. 9 A in 20 ms)	41 A (attenuated to approx. 0 A in 3 ms)
MR-J4-700TM4	68 A (attenuated to approx. 34 A in 20 ms)	
MR-J4-11KTM4	339 A (attenuated to approx. 10 A in 30 ms)	38 A (attenuated to approx. 1 A in 30 ms)
MR-J4-15KTM4	339 A (attenuated to approx. 15 A in 30 ms)	
MR-J4-22KTM4	339 A (attenuated to approx. 20 A in 30 ms)	

(3) 100 V class

The following shows the inrush currents (reference data) that will flow when 120 V AC is applied at the power supply capacity of 2500 kVA and the wiring length of 1 m.

Servo amplifier	Inrush currents (A_{0-P})	
	Main circuit power supply (L1/L2)	Control circuit power supply (L11/L21)
MR-J4-10TM1	38 A (attenuated to approx. 14 A in 10 ms)	20 A to 30 A (attenuated to approx. 0 A in 1 ms to 2 ms)
MR-J4-20TM1		
MR-J4-40TM1		

MEMO

11. OPTIONS AND PERIPHERAL EQUIPMENT

⚠WARNING	●Before connecting any option or peripheral equipment, turn off the power and wait for 15 minutes or more until the charge lamp turns off. Then, confirm that the voltage between P+ and N- is safe with a voltage tester and others. Otherwise, an electric shock may occur. In addition, when confirming whether the charge lamp is off or not, always confirm it from the front of the servo amplifier.

⚠CAUTION	●Use the specified peripheral equipment and options to prevent a malfunction or a fire.

POINT

●We recommend using HIV wires to wire the servo amplifiers, options, and peripheral equipment. Therefore, the recommended wire sizes may differ from those used for the previous servo amplifiers.

11.1 Cable/connector sets

POINT

●The IP rating indicated for cables and connectors is their protection against ingress of dust and raindrops when they are connected to a servo amplifier or servo motor. If the IP rating of the cable, connector, servo amplifier and servo motor vary, the overall IP rating depends on the lowest IP rating of all components.

Please purchase the cable and connector options indicated in this section.

11.1.1 Combinations of cable/connector sets

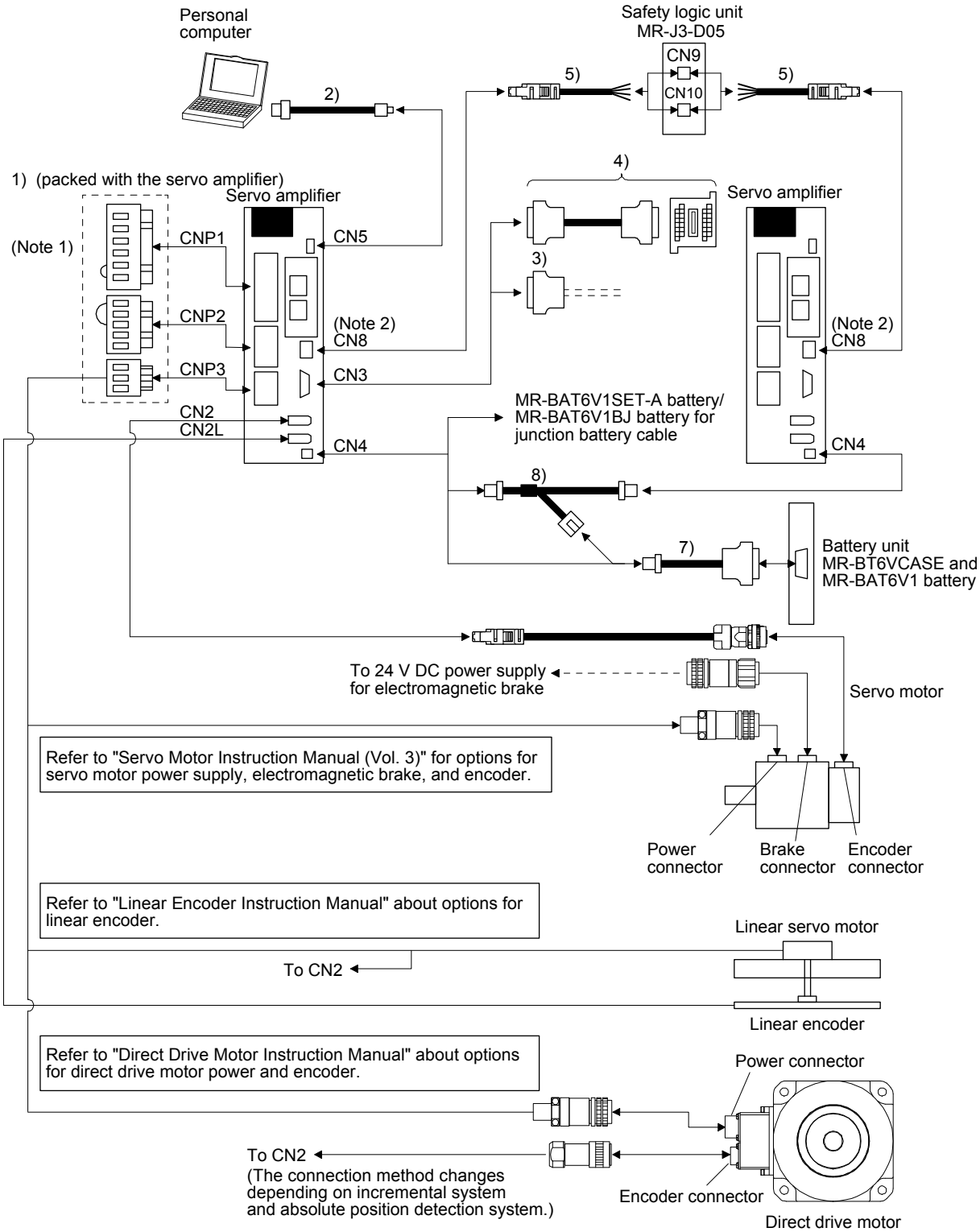

Note 1. Connectors for 3.5 kW or less. For 5 kW or more, it is a terminal block.
2. When not using the STO function, attach the short-circuit connector (6)) came with a servo amplifier.

No.	Product name	Model	Description	Remark
1)	Servo amplifier power connector set		CNP1 Connector: 06JFAT-SAXGDK-H7.5 (JST) CNP2 Connector: 05JFAT-SAXGDK-H5.0 (JST) CNP3 Connector: 03JFAT-SAXGDK-H7.5 (JST) Applicable wire size: 0.8 mm² to 2.1 mm² (AWG 18 to 14) Insulator OD: to 3.9 mm Open tool J-FAT-OT (N) or J-FAT-OT	Supplied with 200 V class and 100 V class servo amplifiers of 1 kW or less
			CNP1 Connector: 06JFAT-SAXGFK-XL (JST) (CNP1 and CNP3) Applicable wire size: 1.25 mm² to 5.5 mm² (AWG 16 to 10) Insulator OD: to 4.7 mm CNP2 Connector: 05JFAT-SAXGDK-H5.0 (JST) (CNP2) Applicable wire size: 0.8 mm² to 2.1 mm² (AWG 18 to 14) Insulator OD: to 3.9 mm CNP3 Connector: 03JFAT-SAXGFK-XL (JST) Open tool Quantity: 1 Model: J-FAT-OT-EXL (JST)	Supplied with 200 V class servo amplifiers of 2 kW and 3.5 kW
			CNP1 connector: 06JFAT-SAXGDK-HT10.5 (JST) CNP2 connector: 05JFAT-SAXGDK-HT7.5 (JST) CNP3 connector: 03JFAT-SAXGDK-HT10.5 (JST) Applicable wire size: 1.25 mm² to 2.1 mm² (AWG 16 to 14) Insulator OD: to 3.9 mm Open tool J-FAT-OT-XL (JST)	Supplied with 400 V class servo amplifiers of 3.5 kW or less
2)	USB cable	MR-J3USBCBL3M Cable length: 3 m	CN5 connector mini-B connector (5 pins) Personal computer connector A connector	For connection with PC-AT compatible personal computer
3)	Connector set	MR-CCN1	Connector: 10120-3000PE Shell kit: 10320-52F0-008 (3M or equivalent)	
4)	Junction terminal block (recommended)		PS7DW-20V14B-F (Toho Technology Corp. Kyoto factory) MR-J2HBUS_M Junction terminal block PS7DW-20V14B-F is not option. For using the junction terminal block, option MR-J2HBUS_M is necessary. Refer to section 11.6 for details.	

No.	Product name	Model	Description	Remark
5)	STO cable	MR-D05UDL3M-B	Connector set: 2069250-1 (TE Connectivity)	Connection cable for the CN8 connector
6)	Short-circuit connector			Supplied with servo amplifier
7)	Battery cable	MR-BT6V1CBL_M Cable length: 0.3/1 m (Refer to section 11.1.3.)	Housing: PAP-02V-O Contact: SPHD-001G-P0.5 (JST) Connector: 10114-3000PE Shell kit: 10314-52F0-008 (3M or equivalent)	For connection with battery unit
8)	Junction battery cable	MR-BT6V2CBL_M Cable length: 0.3/1 m (Refer to section 11.1.3.)	Housing: PAP-02V-O Contact: SPHD-001G-P0.5 (JST) Housing: PALR-02VF-O Contact: SPAL-001GU-P0.5 (JST) Housing: PAP-02V-O Contact: SPHD-001G-P0.5 (JST)	For battery junction

11.1.2 MR-D05UDL3M-B STO cable

This cable is for connecting an external device to the CN8 connector.

Cable model	Cable length	Application
MR-D05UDL3M-B	3 m	Connection cable for the CN8 connector

(1) Configuration diagram

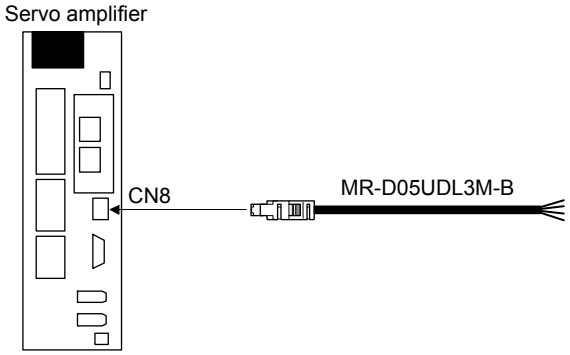

(2) Internal wiring diagram

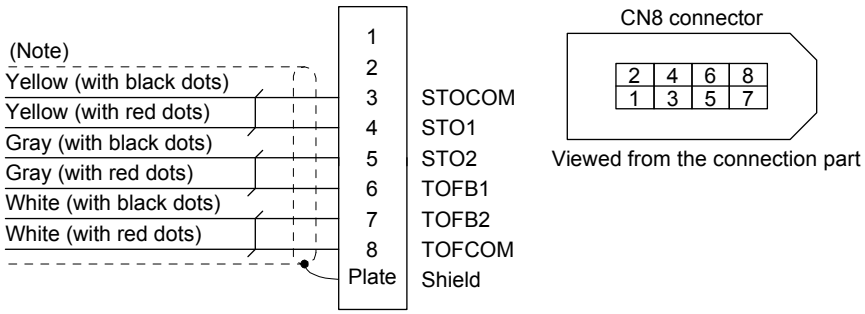

Note. Do not use the two core wires with orange insulator (with red or black dots).

11.1.3 Battery cable/junction battery cable

(1) Model explanations

The numbers in the cable length field of the table indicate the symbol filling the underline "_" in the cable model. The cables of the lengths with the symbols are available.

Cable model	Cable length		Bending life	Application/remark
	0.3 m	1 m		
MR-BT6V1CBL_M	03	1	Standard	For connection with MR-BT6VCASE
MR-BT6V2CBL_M	03	1	Standard	For junction

(2) MR-BT6V1CBL_M

(a) Appearance

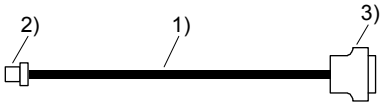

Components	Description
1) Cable	VSVC 7/0.18 × 2C
2) Connector	Housing: PAP-02V-O Contact: SPHD-001G-P0.5 (JST)
3) Connector	Connector: 10114-3000PE Shell kit: 10314-52F0-008 (3M or equivalent)

(b) Internal wiring diagram

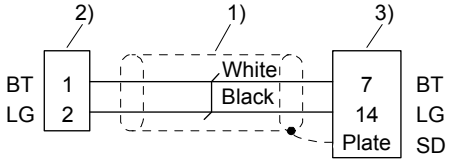

(3) MR-BT6V2CBL_M

(a) Appearance

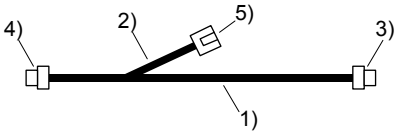

Components	Description
1) Cable	VSVC 7/0.18 × 2C
2) Cable	
3) Connector	Housing: PAP-02V-O Contact: SPHD-001G-P0.5 (JST)
4) Connector	
5) Connector	Housing: PALR-02VF-O Contact: SPAL-001GU-P0.5 (JST)

(b) Internal wiring diagram

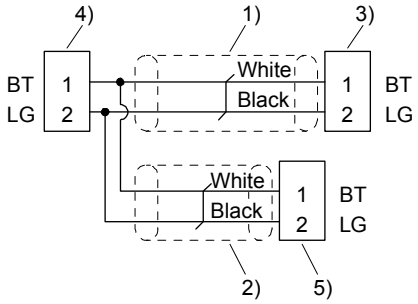

11.2 Regenerative options

> ⚠CAUTION
> ●Do not use servo amplifiers with regenerative options other than the combinations specified below.
> Otherwise, it may cause a fire.

11.2.1 Combination and regenerative power

The power values in the table are resistor-generated powers and not rated powers.

(1) 200 V class

Servo amplifier	Regenerative power [W]									
	Built-in regenerative resistor	MR-RB032 [40 Ω]	MR-RB12 [40 Ω]	MR-RB30 [13 Ω]	MR-RB3N [9 Ω]	MR-RB31 [6.7 Ω]	MR-RB32 [40 Ω]	(Note 1) MR-RB50 [13 Ω]	(Note 1) MR-RB5N [9 Ω]	(Note 1) MR-RB51 [6.7 Ω]
MR-J4-10TM		30								
MR-J4-20TM	10	30	100							
MR-J4-40TM	10	30	100							
MR-J4-60TM	10	30	100							
MR-J4-70TM	20	30	100				300			
MR-J4-100TM	20	30	100				300			
MR-J4-200TM	100			300				500		
MR-J4-350TM	100				300				500	
MR-J4-500TM	130					300				500
MR-J4-700TM	170					300				500

Servo amplifier	(Note 2) Regenerative power [W]			
	External regenerative resistor (accessory)	MR-RB5R [3.2 Ω]	MR-RB9F [3 Ω]	MR-RB9T [2.5 Ω]
MR-J4-11KTM	500 (800)	500 (800)		
MR-J4-15KTM	850 (1300)		850 (1300)	
MR-J4-22KTM	850 (1300)			850 (1300)

Note 1. Always install a cooling fan.
2. Values in parentheses assume the installation of a cooling fan.

(2) 400 V class

Servo amplifier	Regenerative power [W]								
	Built-in regenerative resistor	MR-RB1H-4 [82 Ω]	(Note 1) MR-RB3M-4 [120 Ω]	(Note 1) MR-RB3G-4 [47 Ω]	(Note 1) MR-RB5G-4 [47 Ω]	(Note 1) MR-RB34-4 [26 Ω]	(Note 1) MR-RB54-4 [26 Ω]	(Note 1) MR-RB3U-4 [22 Ω]	(Note 1) MR-RB5U-4 [22 Ω]
MR-J4-60TM4	15	100	300						
MR-J4-100TM4	15	100	300						
MR-J4-200TM4	100			300	500				
MR-J4-350TM4	100			300	500				
MR-J4-500TM4	130					300	500		
MR-J4-700TM4	170							300	500

Servo amplifier	(Note 2) Regenerative power [W]		
	External regenerative resistor (accessory)	MR-RB5K-4 [10 Ω]	MR-RB6K-4 [10 Ω]
MR-J4-11KTM4	500 (800)	500 (800)	
MR-J4-15KTM4	850 (1300)		850 (1300)
MR-J4-22KTM4	850 (1300)		850 (1300)

Note 1. Always install a cooling fan.
2. Values in parentheses assume the installation of a cooling fan.

(3) 100 V class

Servo amplifier	Regenerative power [W]		
	Built-in regenerative resistor	MR-RB032 [40 Ω]	MR-RB12 [40 Ω]
MR-J4-10TM1		30	
MR-J4-20TM1	10	30	100
MR-J4-40TM1	10	30	100

11.2.2 Selection of regenerative option

(1) Rotary servo motor and direct drive motor

Use the following method when regeneration occurs continuously in vertical motion applications or when it is desired to make an in-depth selection of the regenerative option.

(a) Regenerative energy calculation

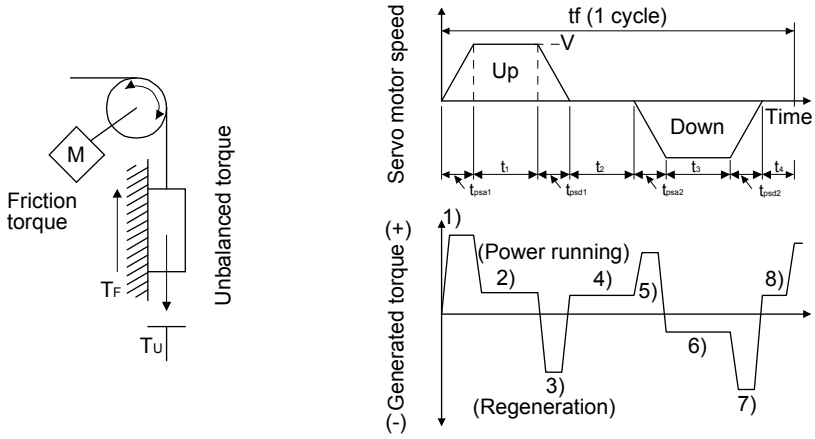

Formulas for calculating torque and energy in operation

Regenerative power	Torque applied to servo motor [N•m] (Note)	Energy E [J]
1)	$T_1 = \frac{(J_L/\eta + J_M) \cdot V}{9.55 \cdot 10^4} \cdot \frac{1}{t_{psa1}} + T_U + T_F$	$E_1 = \frac{0.1047}{2} \cdot V \cdot T_1 \cdot t_{psa1}$
2)	$T_2 = T_U + T_F$	$E_2 = 0.1047 \cdot V \cdot T_2 \cdot t_1$
3)	$T_3 = \frac{-(J_L \cdot \eta + J_M) \cdot V}{9.55 \cdot 10^4} \cdot \frac{1}{t_{psd1}} + T_U + T_F$	$E_3 = \frac{0.1047}{2} \cdot V \cdot T_3 \cdot t_{psd1}$
4), 8)	$T_4, T_8 = T_U$	$E_4, E_8 \geq 0$ (No regeneration)
5)	$T_5 = \frac{(J_L/\eta + J_M) \cdot V}{9.55 \cdot 10^4} \cdot \frac{1}{t_{psa2}} - T_U + T_F$	$E_5 = \frac{0.1047}{2} \cdot V \cdot T_5 \cdot t_{psa2}$
6)	$T_6 = -T_U + T_F$	$E_6 = 0.1047 \cdot V \cdot T_6 \cdot t_3$
7)	$T_7 = \frac{-(J_L \cdot \eta + J_M) \cdot V}{9.55 \cdot 10^4} \cdot \frac{1}{t_{psd2}} - T_U + T_F$	$E_7 = \frac{0.1047}{2} \cdot V \cdot T_7 \cdot t_{psd2}$

Note. η: Drive system efficiency

From the calculation results in 1) to 8), find the absolute value (Es) of the sum total of negative energies.

(b) Losses of servo motor and servo amplifier in regenerative mode

The following table lists the efficiencies and other data of the servo motor and servo amplifier in the regenerative mode.

Servo amplifier	Inverse efficiency [%]	Capacitor charging [J]
MR-J4-10TM	55	9
MR-J4-20TM	75	9
MR-J4-40TM	85	11
MR-J4-60TM	85	11
MR-J4-70TM	85	18
MR-J4-100TM	85	18
MR-J4-200TM	85	36
MR-J4-350TM	85	40
MR-J4-500TM	90	45
MR-J4-700TM	90	70
MR-J4-11KTM	90	120
MR-J4-15KTM	90	170
MR-J4-22KTM	90	250

Servo amplifier	Inverse efficiency [%]	Capacitor charging [J]
MR-J4-60TM4	85	12
MR-J4-100TM4	85	12
MR-J4-200TM4	85	25
MR-J4-350TM4	85	43
MR-J4-500TM4	90	45
MR-J4-700TM4	90	70
MR-J4-11KTM4	90	120
MR-J4-15KTM4	90	170
MR-J4-22KTM4	90	250
MR-J4-10TM1	55	4
MR-J4-20TM1	75	4
MR-J4-40TM1	85	10

Inverse efficiency (η_m): Efficiency including some efficiencies of the servo motor and servo amplifier when rated (regenerative) torque is generated at rated speed. Efficiency varies with the servo motor speed and generated torque. Since the characteristics of the electrolytic capacitor change with time, allow for approximately 10% higher inverse efficiency.

Capacitor charging (Ec): Energy charged into the electrolytic capacitor in the servo amplifier

Subtract the capacitor charging from the result of multiplying the sum total of regenerative energies by the inverse efficiency to calculate the energy consumed by the regenerative option.

$ER\ [J] = \eta_m \cdot Es - Ec$

Calculate the power consumption of the regenerative option on the basis of single-cycle operation period tf [s] to select the necessary regenerative option.

$PR\ [W] = ER/tf$

(2) Linear servo motor

(a) Thrust and energy calculation

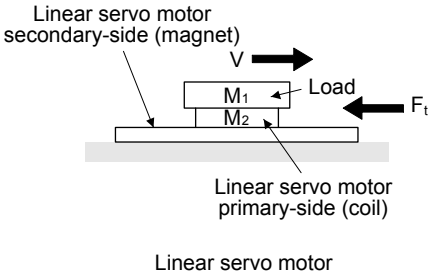

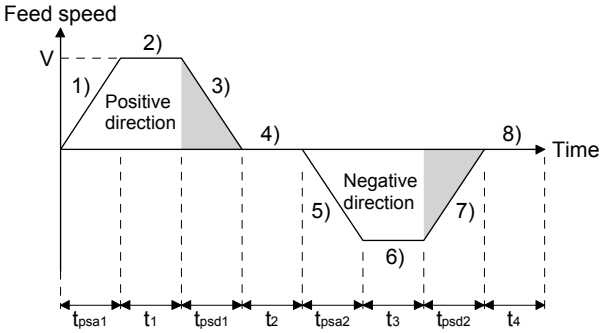

The following shows equations of the linear servo motor thrust and energy at the driving pattern above.

Section	Thrust F of linear servo motor [N]	Energy E [J]
1)	$F_1 = (M_1 + M_2) \cdot V/t_{psa1} + F_t$	$E_1 = V/2 \cdot F_1 \cdot t_{psa1}$
2)	$F_2 = F_1$	$E_2 = V \cdot F_2 \cdot t_1$
3)	$F_3 = -(M_1 + M_2) \cdot V/t_{psd1} + F_t$	$E_3 = V/2 \cdot F_3 \cdot t_{psd1}$
4), 8)	$F_4, F_8 = 0$	$E_4, E_8 = 0$ (No regeneration)
5)	$F_5 = (M_1 + M_2) \cdot V/t_{psa2} + F_t$	$E_5 = V/2 \cdot F_5 \cdot t_{psa2}$
6)	$F_6 = F_t$	$E_6 = V \cdot F_6 \cdot t_3$
7)	$F_7 = -(M_1 + M_2) \cdot V/t_{psd2} + F_t$	$E_7 = V/2 \cdot F_7 \cdot t_{psd2}$

From the calculation results in 1) to 8), find the absolute value (Es) of the sum total of negative energies.

(b) Losses of servo motor and servo amplifier in regenerative mode

For inverse efficiency and capacitor charging energy, refer to (1) (b) in this section.

(c) Regenerative energy calculation

Subtract the capacitor charging from the result of multiplying the sum total of regenerative energies by the inverse efficiency to calculate the energy consumed by the regenerative resistor.

$ER\ [J] = \eta \cdot Es - Ec$

From the total of ER's whose subtraction results are positive and one-cycle period, the power consumption PR [W] of the regenerative option can be calculated with the following equation.

PR [W] = total of positive ER's/one-cycle operation period (tf)

Select a regenerative option from the PR value. Regenerative option is not required when the energy consumption is equal to or less than the built-in regenerative energy.

11.2.3 Parameter setting

Set [Pr. PA02] according to the option to be used.

[Pr. PA02]

0	0		

Regenerative option selection
00: Regenerative option is not used.
- For servo amplifier of 100 W, regenerative resistor is not used.
- For servo amplifier of 0.2 kW to 7 kW, built-in regenerative resistor is used.
- Supplied regenerative resistors or regenerative option is used with the servo amplifier of 11 kW to 22 kW.

01: FR-BU2/FR-BU2-H/FR-RC/FR-RC-H/FR-CV/FR-CV-H
02: MR-RB032
03: MR-RB12
04: MR-RB32
05: MR-RB30
06: MR-RB50 (Cooling fan is required)
08: MR-RB31
09: MR-RB51 (Cooling fan is required)
0B: MR-RB3N
0C: MR-RB5N (Cooling fan is required)
80: MR-RB1H-4
81: MR-RB3M-4 (Cooling fan is required.)
82: MR-RB3G-4 (Cooling fan is required.)
83: MR-RB5G-4 (Cooling fan is required.)
84: MR-RB34-4 (Cooling fan is required.)
85: MR-RB54-4 (Cooling fan is required.)
91: MR-RB3U-4 (Cooling fan is required.)
92: MR-RB5U-4 (Cooling fan is required.)
FA: When the supplied regenerative resistors or the regenerative option is cooled by the cooling fan to increase the ability with the servo amplifier of 11 kW to 22 kW.

11.2.4 Connection of regenerative option

POINT

- When MR-RB50, MR-RB51, MR-RB5N, MR-RB3M-4, MR-RB3G-4, MR-RB5G-4, MR-RB34-4, MR-RB54-4, MR-RB5K-4, or MR-RB6K-4 is used, a cooling fan is required to cool it. The cooling fan should be prepared by the customer.
- For the wire sizes used for wiring, refer to section 11.9.

The regenerative option generates heat of 100 °C higher than the ambient temperature. Fully consider heat dissipation, installation position, wires used, etc. before installing the option. For wiring, use flame-resistant wires or make the wires flame-resistant and keep them away from the regenerative option. Use twisted wires with a maximum length of 5 m for a connection with the servo amplifier.

(1) MR-J4-500TM or less/MR-J4-350TM4 or less

Always remove the wiring from across P+ to D and fit the regenerative option across P+ to C. G3 and G4 are thermal sensor's terminals. Between G3 and G4 is opened when the regenerative option overheats abnormally.

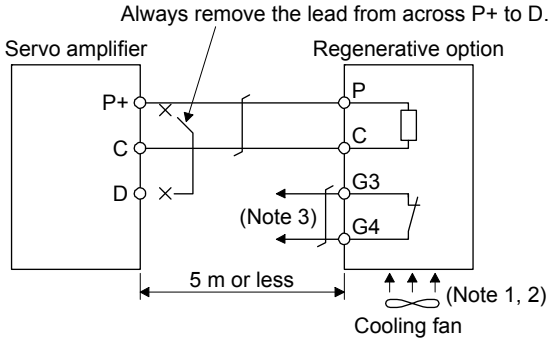

Note 1. When using the MR-RB50, MR-RB5N, MR-RB51, MR-RB3M-4, MR-RB3G-4, or MR-RB5G-4, forcibly cool it with a cooling fan (1.0 m^3/min or more, 92 mm × 92 mm).

2. When the ambient temperature is more than 55 °C and the regenerative load ratio is more than 60% in MR-RB30, MR-RB31, MR-RB32, and MR-RB3N, forcefully cool the air with a cooling fan (1.0 m^3/min or more, 92 mm × 92 mm). A cooling fan is not required if the ambient temperature is 35 °C or less. (A cooling fan is required for the shaded area in the following graph.)

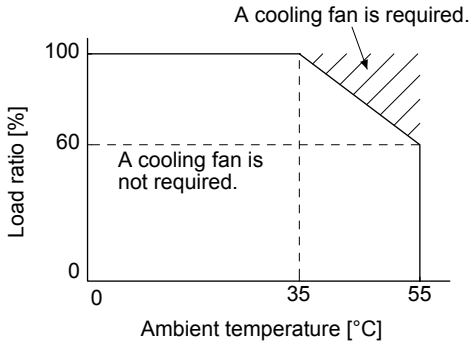

3. Make up a sequence which will switch off the magnetic contactor when abnormal heating occurs.

G3-G4 contact specifications

Maximum voltage: 120 V AC/DC

Maximum current: 0.5 A/4.8 V DC

Maximum capacity: 2.4 VA

(2) MR-J4-500TM4/MR-J4-700TM/ MR-J4-700TM4

Always remove the wiring (across P+ to C) of the servo amplifier built-in regenerative resistor and fit the regenerative option across P+ to C. G3 and G4 are thermal sensor's terminals. Between G3 and G4 is opened when the regenerative option overheats abnormally.

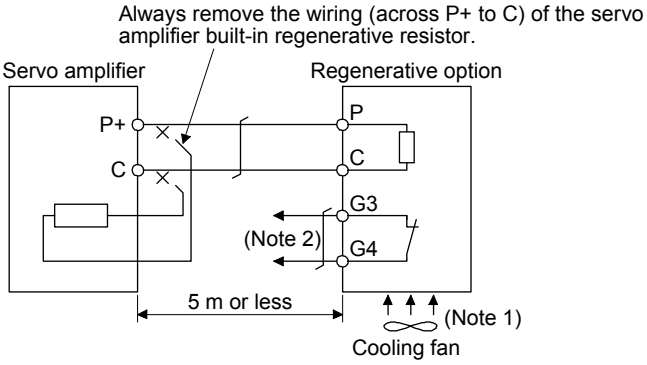

Note 1. When using the MR-RB51, MR-RB34-4, MR-RB54-4, MR-RB3U-4, or MR-RB5U-4, forcibly cool it with a cooling fan (1.0 m^3/min or more, 92 mm × 92 mm).

2. Make up a sequence which will switch off the magnetic contactor when abnormal heating occurs.

G3-G4 contact specifications

Maximum voltage: 120 V AC/DC

Maximum current: 0.5 A/4.8 V DC

Maximum capacity: 2.4 VA

When using the regenerative option, remove the servo amplifier's built-in regenerative resistor wires (across P+ to C), fit them back to back, and secure them to the frame with the accessory screw as shown below.

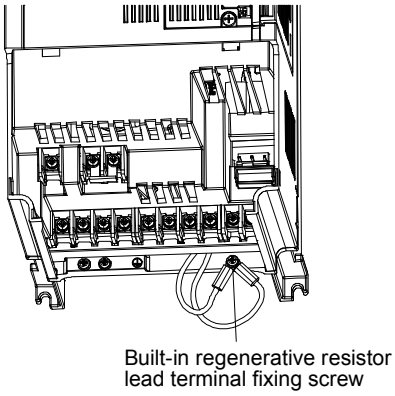

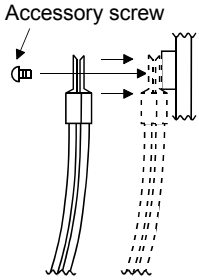

(3) MR-J4-11KTM to MR-J4-22KTM/MR-J4-11KTM4 to MR-J4-22KTM4 (when using the supplied regenerative resistor)

⚠CAUTION

- The regenerative resistor supplied with 11 kW to 22 kW servo amplifiers does not have a protective cover. Touching the resistor (including wiring/screw hole area) may cause a burn injury and electric shock. Even if the power was shut-off, be careful until the bus voltage discharged and the temperature decreased because of the following reasons.
  - It may cause a burn injury due to very high temperature without cooling.
  - It may cause an electric shock due to charged capacitor of the servo amplifier.
- Do not use servo amplifiers with external regenerative resistors other than the combinations specified below. Otherwise, it may cause a fire.

When using the regenerative resistors supplied to the servo amplifier, the specified number of resistors (4 or 5 resistors) must be connected in series. If they are connected in parallel or in less than the specified number, the servo amplifier may become faulty and/or the regenerative resistors burn. Install the resistors at intervals of about 70 mm. Cooling the resistors with two cooling fans (1.0 m^3/min or more, 92 mm × 92 mm) improves the regeneration capability. In this case, set "_ _ F A" in [Pr. PA02].

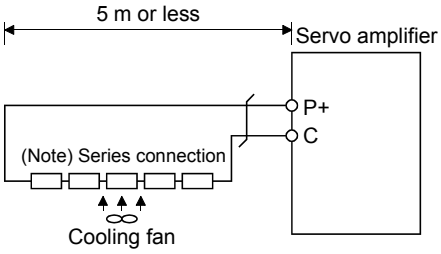

Note. The number of resistors connected in series depends on the resistor type. The thermal sensor is not mounted on the attached regenerative resistor. An abnormal heating of resistor may be generated at a regenerative circuit failure. Install a thermal sensor near the resistor and establish a protective circuit to shut off the main circuit power supply when abnormal heating occurs. The detection level of the thermal sensor varies according to the settings of the resistor. Set the thermal sensor in the most appropriate position on the design basis of the device, or use the thermal sensor built-in regenerative option. (MR-RB5R, MR-RB9F, MR-RB9T, MR-RB5K-4, or MR-RB6K-4)

Servo amplifier	Regenerative resistor	Symbol (Note)	Regenerative power [W]		Resultant resistance [Ω]	Number of resistors
			Normal	Cooling		
MR-J4-11KTM	GRZG400-0.8Ω	GR400 R80K	500	800	3.2	4
MR-J4-15KTM	GRZG400-0.6Ω	GR400 R60K	850	1300	3	5
MR-J4-22KTM	GRZG400-0.5Ω	GR400 R50K			2.5	
MR-J4-11KTM4	GRZG400-2.5Ω	GR400 2R5K	500	800	10	4
MR-J4-15KTM4 MR-J4-22KTM4	GRZG400-2Ω	GR400 2R0K	850	1300	10	5

Note. The following shows an indication example of symbol.

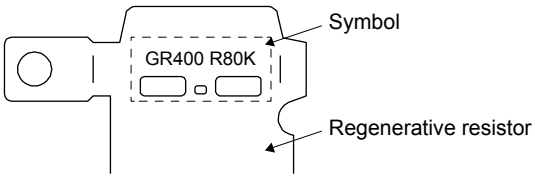

(4) MR-J4-11KTM-PX to MR-J4-22KTM-PX/MR-J4-11KTM4-PX to MR-J4-22KTM4-PX (when using the regenerative option)

The MR-J4-11KTM-PX to MR-J4-22KTM-PX and MR-J4-11KTM4-PX to MR-J4-22KTM4-PX servo amplifiers are not supplied with regenerative resistors. When using any of these servo amplifiers, always use the regenerative option MR-RB5R, MR-RB9F, MR-RB9T, MR-RB5K-4, and MR-RB6K-4.

Cooling the regenerative option with cooling fans improves regenerative capability. G3 and G4 are thermal sensor's terminals. Between G3 and G4 is opened when the regenerative option overheats abnormally.

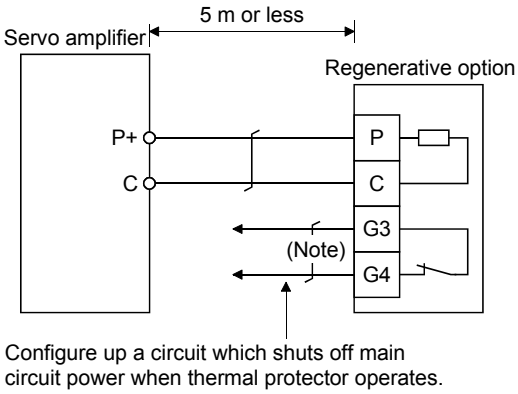

Note. G3-G4 contact specifications
Maximum voltage: 120 V AC/DC
Maximum current: 0.5 A/4.8 V DC
Maximum capacity: 2.4 VA

Servo amplifier	Regenerative option	Resistance [Ω]	Regenerative power [W]	
			Without cooling fans	With cooling fans
MR-J4-11KTM-PX	MR-RB5R	3.2	500	800
MR-J4-15KTM-PX	MR-RB9F	3	850	1300
MR-J4-22KTM-PX	MR-RB9T	2.5	850	1300
MR-J4-11KTM4-PX	MR-RB5K-4	10	500	800
MR-J4-15KTM4-PX MR-J4-22KTM4-PX	MR-RB6K-4	10	850	1300

When using cooling fans, install them using the mounting holes provided in the bottom of the regenerative option.

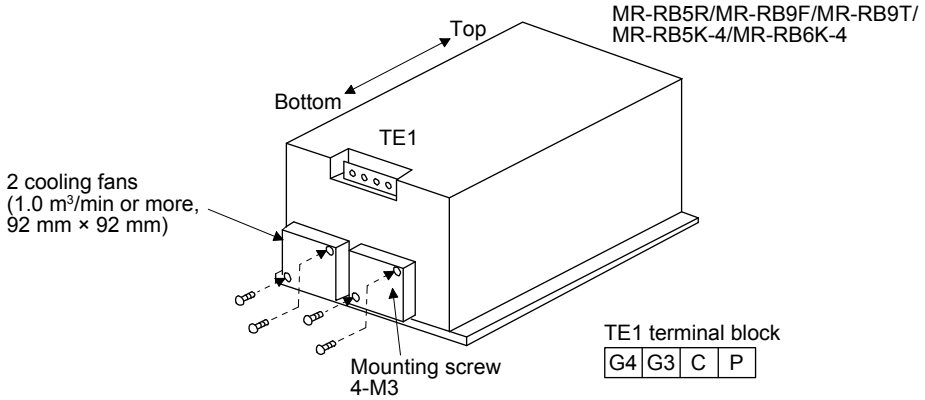

11.2.5 Dimensions

(1) MR-RB12

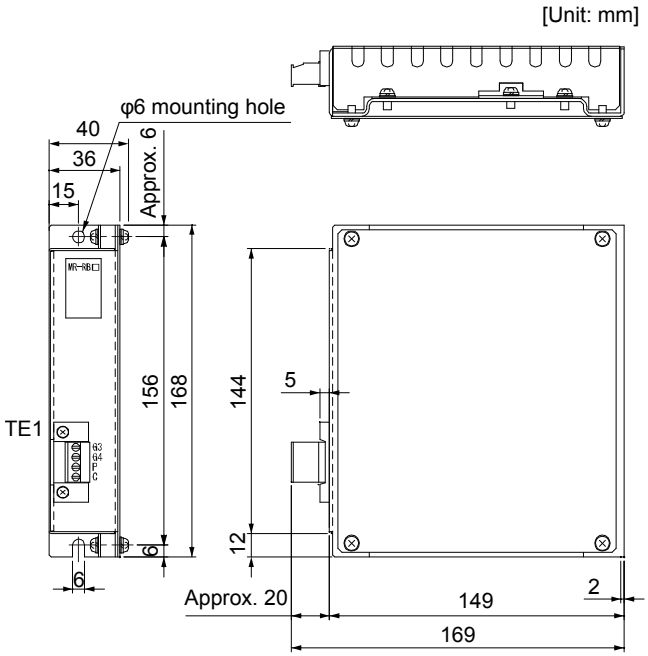

- TE1 terminal

G3
G4
P
C

Applicable wire size: 0.2 mm² to 2.5 mm² (AWG 24 to 12)
Tightening torque: 0.5 to 0.6 [N•m]

- Mounting screw
  Screw size: M5
  Tightening torque: 3.24 [N•m]

Mass: 1.1 [kg]

(2) MR-RB30/MR-RB31/MR-RB32/MR-RB3N/MR-RB34-4/MR-RB3M-4/MR-RB3G-4/MR-RB3U-4

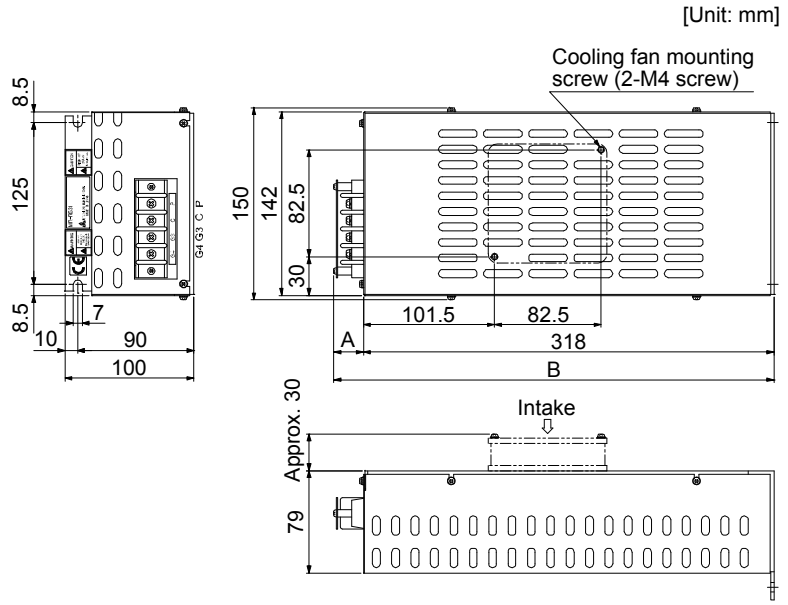

・Terminal block

P
C
G3
G4

Terminal screw size: M4
Tightening torque: 1.2 [N•m]

・Mounting screw
Screw size: M6
Tightening torque: 5.4 [N•m]

Regenerative option	Variable dimensions		Mass [kg]
	A	B	
MR-RB30	17	335	2.9
MR-RB31			
MR-RB32			
MR-RB3N			
MR-RB34-4	23	341	
MR-RB3M-4			
MR-RB3G-4			
MR-RB3U-4			

(3) MR-RB50/MR-RB51/MR-RB5N/MR-RB54-4/MR-RB5G-4/MR-RB5U-4

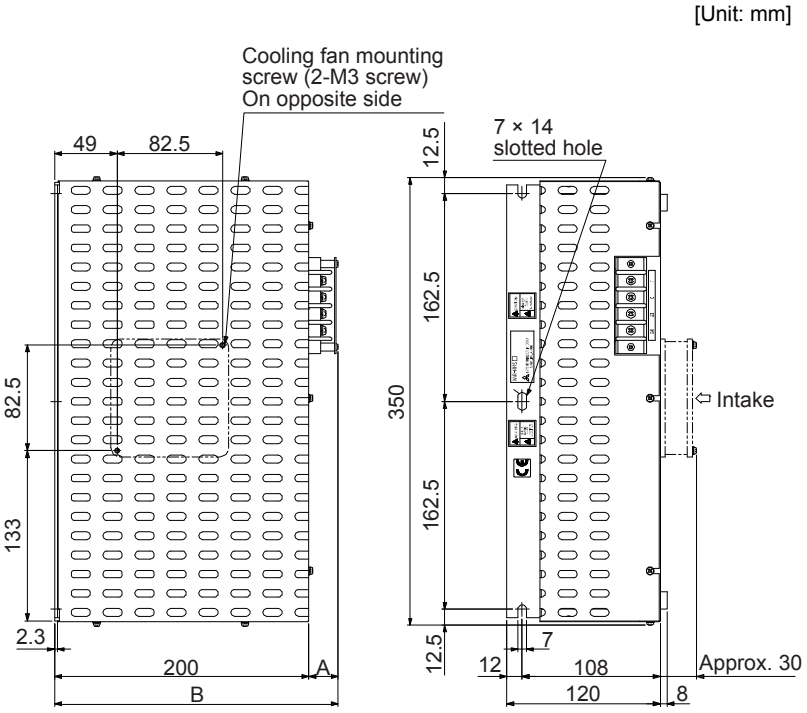

・Terminal block

P
C
G3
G4

Terminal screw size: M4
Tightening torque: 1.2 [N•m]

・Mounting screw
Screw size: M6
Tightening torque: 5.4 [N•m]

Regenerative option	Variable dimensions		Mass [kg]
	A	B	
MR-RB50	17	217	5.6
MR-RB51			
MR-RB5N			
MR-RB54-4	23	223	
MR-RB5G-4			
MR-RB5U-4			

(4) MR-RB032

[Unit: mm]

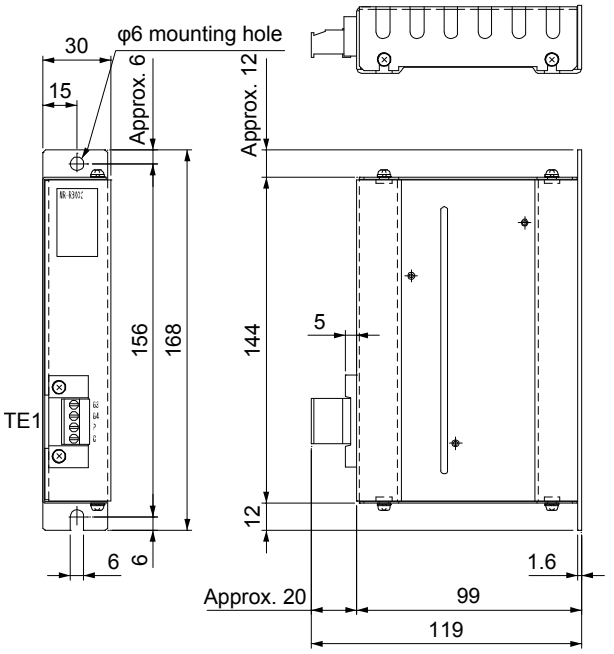

・TE1 terminal

G3
G4
P
C

Applicable wire size: 0.2 mm^2 to 2.5 mm^2 (AWG 24 to 12)
Tightening torque: 0.5 to 0.6 [N•m]

・Mounting screw
Screw size: M5
Tightening torque: 3.24 [N•m]

Mass: 0.5 [kg]

(5) MR-RB5R/MR-RB9F/MR-RB9T/MR-RB5K-4/MR-RB6K-4

[Unit: mm]

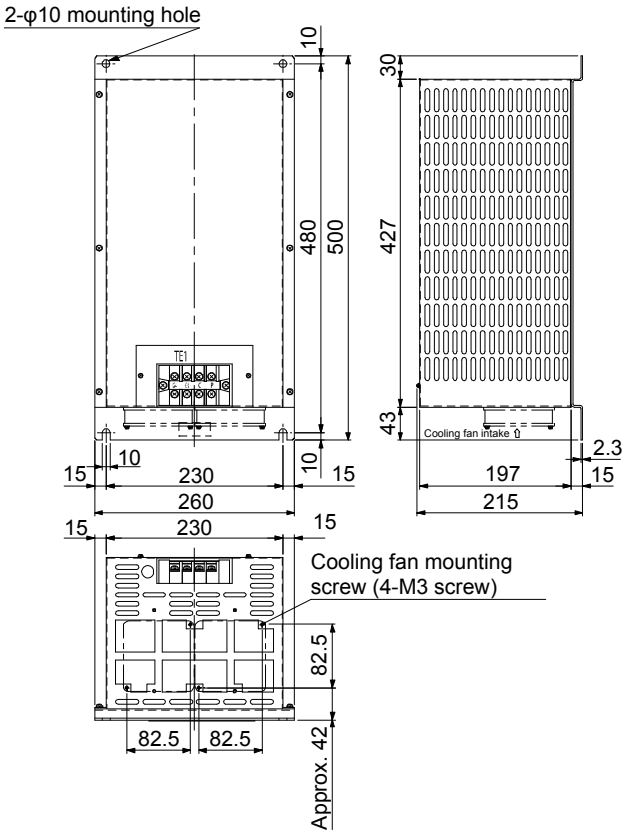

・TE1 terminal block

G4	G3	C	P

Terminal screw size: M5
Tightening torque: 2.0 [N•m]

・Mounting screw
Screw size: M8
Tightening torque: 13.2 [N•m]

Regenerative option	Mass [kg]
MR-RB5R	10
MR-RB9F	11
MR-RB9T	
MR-RB5K-4	10
MR-RB6K-4	11

(6) MR-RB1H-4

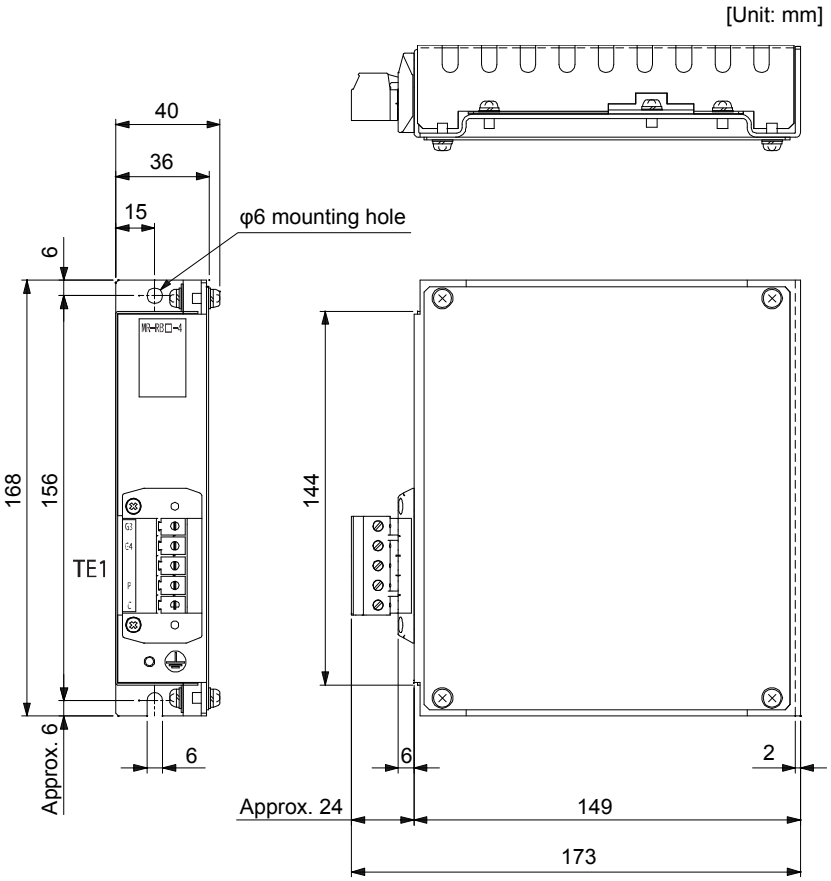

・TE1 terminal

G3
G4
P
C

Applicable wire size: AWG 24 to 10
Tightening torque: 0.5 to 0.6 [N•m]

Mounting screw
Screw size: M5
Tightening torque: 3.24 [N•m]

Mass: 1.1 [kg]

(7) GRZG400-0.8Ω/GRZG400-0.6Ω/GRZG400-0.5Ω/GRZG400-2.5Ω/GRZG400-2.0Ω (standard accessories)

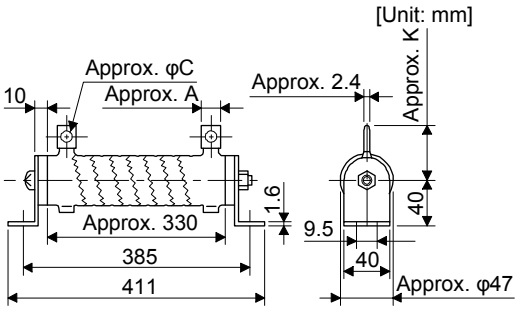

Regenerative resistor	Variable dimensions			Mounting screw size	Tightening torque [N•m]	Mass [kg]
	A	C	K			
GRZG400-0.8Ω	10	5.5	39	M8	13.2	0.8
GRZG400-0.6Ω	16	8.2	46			
GRZG400-0.5Ω						
GRZG400-2.5Ω	10	5.5	39			
GRZG400-2.0Ω						

11.3 FR-BU2-(H) brake unit

POINT

- Use a 200 V class brake unit and a resistor unit with a 200 V class servo amplifier, and a 400 V class brake unit and a resistor unit with a 400 V class servo amplifier. Combination of different voltage class units cannot be used.
- When a brake unit and a resistor unit are installed horizontally or diagonally, the heat dissipation effect diminishes. Install them on a flat surface vertically.
- The temperature of the resistor unit case will be higher than the ambient temperature by 100 ˚C or over. Keep cables and flammable materials away from the case.
- Ambient temperature condition of the brake unit is between -10 ˚C and 50 ˚C. Note that the condition is different from the ambient temperature condition of the servo amplifier (between 0 ˚C and 55 ˚C).
- Configure the circuit to shut down the power-supply with the alarm output of the brake unit and the resistor unit under abnormal condition.
- Use the brake unit with a combination indicated in section 11.3.1.
- For executing a continuous regenerative operation, use FR-RC-(H) power regeneration converter or FR-CV-(H) power regeneration common converter.
- Brake unit and regenerative options (Regenerative resistor) cannot be used simultaneously.

Connect the brake unit to the bus of the servo amplifier. As compared to the MR-RB regenerative option, the brake unit can return larger power. Use the brake unit when the regenerative option cannot provide sufficient regenerative capability.
When using the brake unit, set [Pr. PA02] to "_ _ 0 1".
When using the brake unit, always refer to the FR-BU2 Instruction Manual.

11.3.1 Selection

Use a combination of servo amplifier, brake unit and resistor unit listed below.

Brake unit		Resistor unit	Number of connected units	Permissible continuous power [kW]	Resultant resistance [Ω]	Applicable servo amplifier (Note 3)
200 V class	FR-BU2-15K	FR-BR-15K	1	0.99	8	MR-J4-500TM (Note 1)
			2 (parallel)	1.98	4	MR-J4-500TM MR-J4-700TM MR-J4-11KTM MR-J4-15KTM
	FR-BU2-30K	FR-BR-30K	1	1.99	4	MR-J4-500TM MR-J4-700TM MR-J4-11KTM MR-J4-15KTM
	FR-BU2-55K	FR-BR-55K	1	3.91	2	MR-J4-11KTM MR-J4-15KTM MR-J4-22KTM
		MT-BR5-55K	1	5.5	2	MR-J4-22KTM

Brake unit		Resistor unit	Number of connected units	Permissible continuous power [kW]	Resultant resistance [Ω]	Applicable servo amplifier (Note 3)
400 V class	FR-BU2-H30K	FR-BR-H30K	1	1.99	16	MR-J4-500TM4 MR-J4-700TM4 MR-J4-11KTM4 (Note 2)
	FR-BU2-H55K	FR-BR-H55K	1	3.91	8	MR-J4-11KTM4 MR-J4-15KTM4 MR-J4-22KTM4
	FR-BU2-H75K	MT-BR5-H75K	1	7.5	6.5	MR-J4-22KTM4

Note 1. Only when using servo motor HG-RR353/HG-UR352
2. When HG-JR11K1M4 servo motor is used, limit the torque during power running to 180% or less, or the servo motor speed to 1800 r/min or less.
3. When the brake unit is selected by using the capacity selection software, a brake unit other than the combinations listed may be shown. Refer to the combinations displayed on the capacity selection software for detailed combinations.

11.3.2 Brake unit parameter setting

Whether a parameter can be changed or not is listed below.

Parameter		Change possible/ impossible	Remark
No.	Name		
0	Brake mode switchover	Impossible	Do not change the parameter.
1	Monitor display data selection	Possible	Refer to the FR-BU2 Instruction Manual.
2	Input terminal function selection 1	Impossible	Do not change the parameter.
3	Input terminal function selection 2		
77	Parameter write selection		
78	Cumulative energization time carrying-over times		
CLr	Parameter clear		
ECL	Alarm history clear		
C1	For manufacturer setting		

11.3.3 Connection example

POINT
●EM2 has the same function as EM1 in the torque mode. ●Connecting PR terminal of the brake unit to the P+ terminal of the servo amplifier results in brake unit malfunction. Always connect the PR terminal of the brake unit to the PR terminal of the resistor unit.

(1) Combination with FR-BR-(H) resistor unit

(a) When connecting a brake unit to a servo amplifier

1) 200 V class

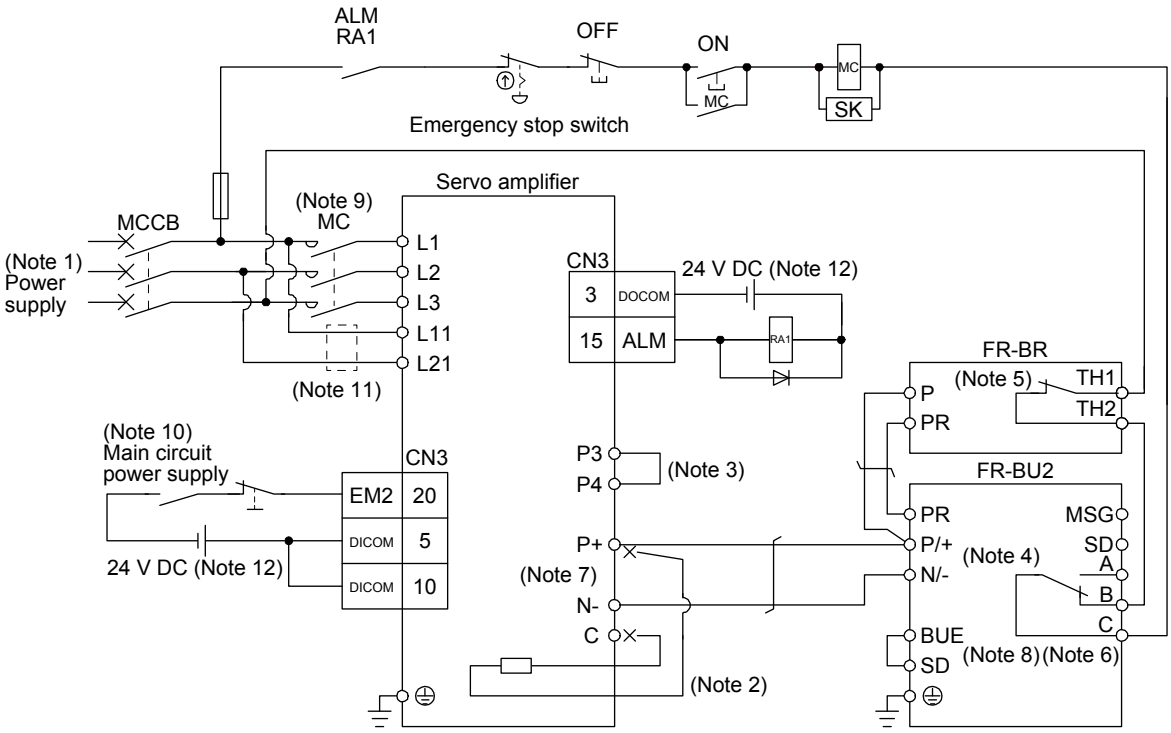

Note 1. For the power supply specifications, refer to section 1.3.
2. When using the servo amplifier of 7 kW or less, make sure to disconnect the wiring of built-in regenerative resistor (5 kW or less: P+ and D, 7 kW: P+ and C). For the servo amplifier of 11 kW to 22 kW, do not connect a supplied regenerative resistor to the P+ and C terminals.
3. Between P3 and P4 is connected by default. When using the power factor improving DC reactor, remove the short bar between P3 and P4. Refer to section 11.11 for details. Additionally, a power factor improving DC reactor and power factor improving AC reactor cannot be used simultaneously.
4. Connect P/+ and N/- terminals of the brake unit to a correct destination. Incorrect connection destination results in servo amplifier and brake unit malfunction.
5. Contact rating: 1b contact, 110 V AC, 5 A/220 V AC, 3 A
Normal condition: TH1-TH2 is conducting. Abnormal condition: TH1-TH2 is not conducting.
6. Contact rating: 230 V AC, 0.3 A/30 V DC, 0.3 A
Normal condition: B-C is conducting./A-C is not conducting. Abnormal condition: B-C is not conducting./A-C is conducting.
7. Do not connect more than one cable to each P+ and N- terminals of the servo amplifier.
8. Always connect BUE and SD terminals. (factory-wired)
9. Depending on the main circuit voltage and operation pattern, bus voltage decreases, and that may cause the forced stop deceleration to shift to the dynamic brake deceleration. When dynamic brake deceleration is not required, slow the time to turn off the magnetic contactor.
10. Configure a circuit to turn off EM2 when the main circuit power is turned off to prevent an unexpected restart of the servo amplifier.
11. When wires used for L11 and L21 are thinner than wires used for L1, L2, and L3, use a molded-case circuit breaker.
12. The illustration of the 24 V DC power supply is divided between input signal and output signal for convenience. However, they can be configured by one.

2) 400 V class

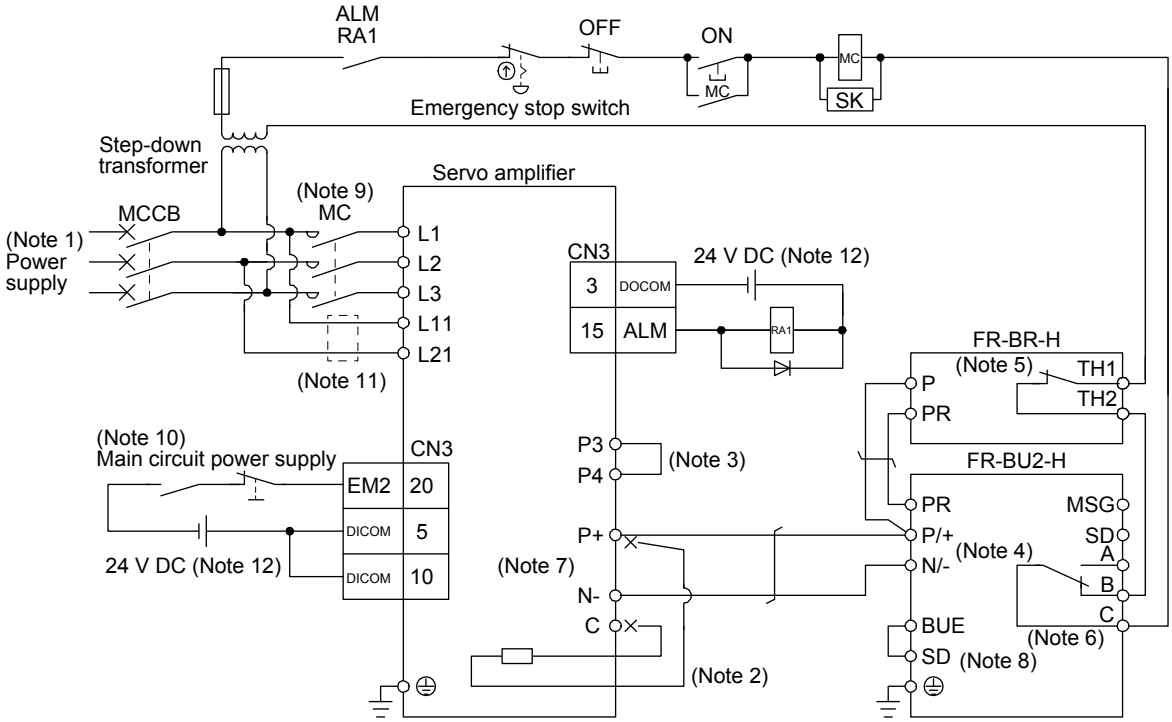

Note 1. For the power supply specifications, refer to section 1.3.

2. For the servo amplifier of 5 kW and 7 kW, always disconnect the lead wire of built-in regenerative resistor, which is connected to P+ and C terminals. For the servo amplifier of 11 kW to 22 kW, do not connect a supplied regenerative resistor to the P+ and C terminals.

3. Between P3 and P4 is connected by default. When using the power factor improving DC reactor, remove the short bar between P3 and P4. Refer to section 11.11 for details. Additionally, a power factor improving DC reactor and power factor improving AC reactor cannot be used simultaneously.

4. Connect P/+ and N/- terminals of the brake unit to a correct destination. Incorrect connection destination results in servo amplifier and brake unit malfunction.

5. Contact rating: 1b contact, 110 V AC, 5 A/220 V AC, 3 A
Normal condition: TH1-TH2 is conducting. Abnormal condition: TH1-TH2 is not conducting.

6. Contact rating: 230 V AC, 0.3 A/30 V DC, 0.3 A
Normal condition: B-C is conducting./A-C is not conducting. Abnormal condition: B-C is not conducting./A-C is conducting.

7. Do not connect more than one cable to each P+ and N- terminals of the servo amplifier.

8. Always connect BUE and SD terminals. (factory-wired)

9. Depending on the main circuit voltage and operation pattern, bus voltage decreases, and that may cause the forced stop deceleration to shift to the dynamic brake deceleration. When dynamic brake deceleration is not required, slow the time to turn off the magnetic contactor.

10. Configure a circuit to turn off EM2 when the main circuit power is turned off to prevent an unexpected restart of the servo amplifier.

11. When wires used for L11 and L21 are thinner than wires used for L1, L2, and L3, use a molded-case circuit breaker.

12. The illustration of the 24 V DC power supply is divided between input signal and output signal for convenience. However, they can be configured by one.

(b) When connecting two brake units to a servo amplifier

POINT

- To use brake units with a parallel connection, use two sets of FR-BU2 brake unit. Combination with other brake unit results in alarm occurrence or malfunction.
- Always connect the terminals for master/slave (MSG to MSG, SD to SD) between the two brake units.
- Do not connect the servo amplifier and brake units as below. Connect the cables with a terminal block to distribute as indicated in this section.

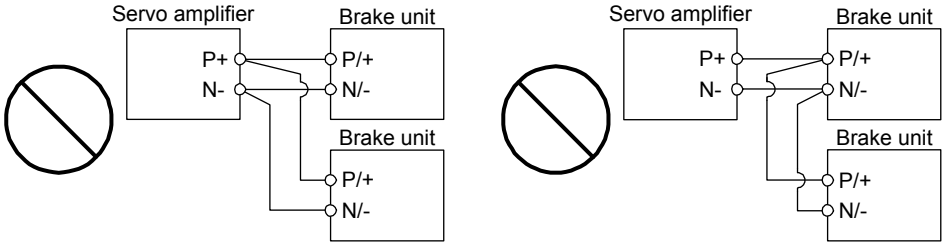

Connecting two cables to P+ and N- terminals

Passing wiring

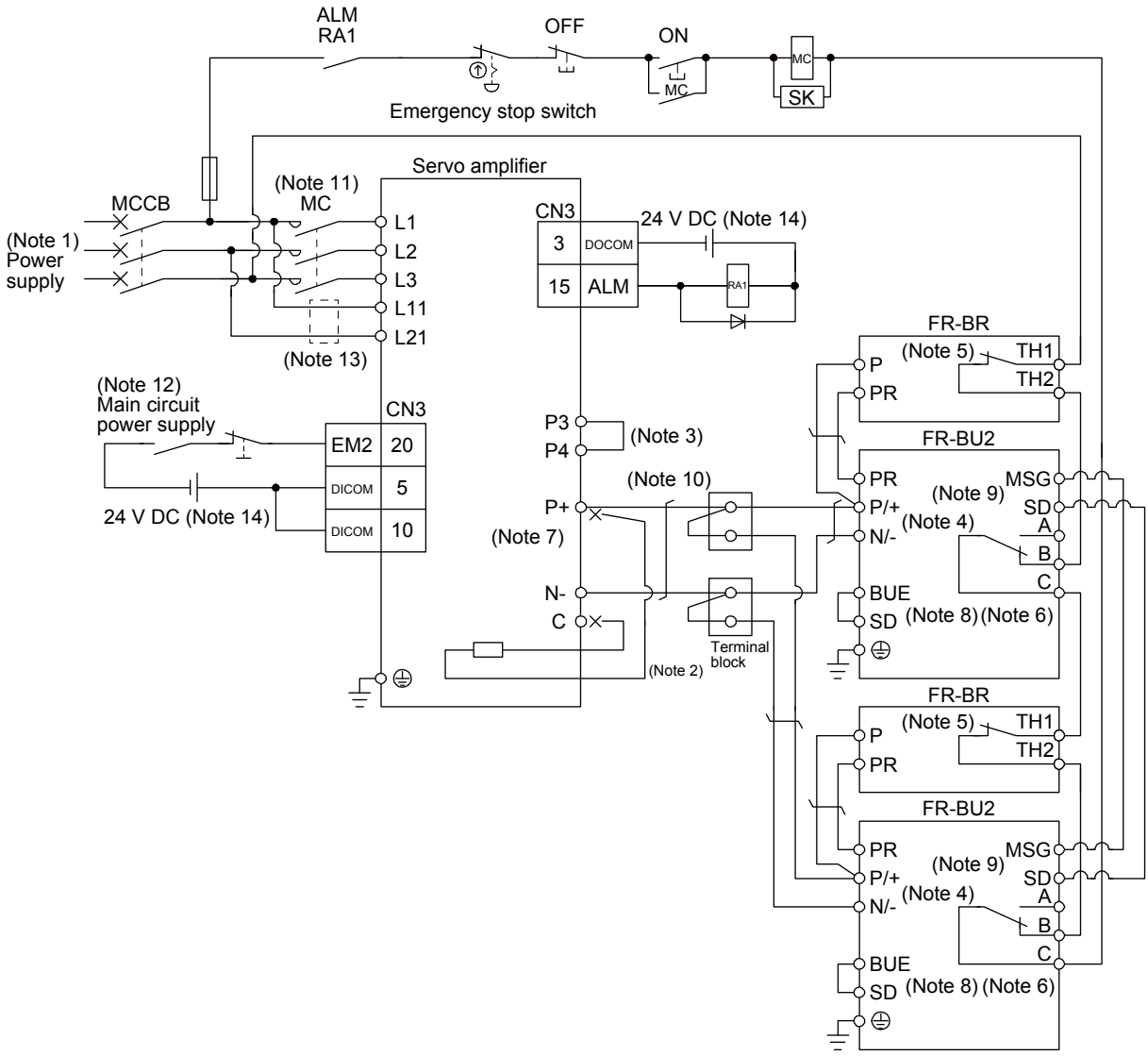

Note 1. For the power supply specifications, refer to section 1.3.
2. When using the servo amplifier of 7 kW or less, make sure to disconnect the wiring of built-in regenerative resistor (5 kW or less: P+ and D, 7 kW: P+ and C). For the servo amplifier of 11 kW to 22 kW, do not connect a supplied regenerative resistor to the P+ and C terminals.
3. Between P3 and P4 is connected by default. When using the power factor improving DC reactor, remove the short bar between P3 and P4. Refer to section 11.11 for details. Additionally, a power factor improving DC reactor and power factor improving AC reactor cannot be used simultaneously.
4. Connect P/+ and N/- terminals of the brake unit to a correct destination. Incorrect connection destination results in servo amplifier and brake unit malfunction.
5. Contact rating: 1b contact, 110 V AC, 5 A/220 V AC, 3 A
Normal condition: TH1-TH2 is conducting. Abnormal condition: TH1-TH2 is not conducting.
6. Contact rating: 230 V AC, 0.3 A/30 V DC, 0.3 A
Normal condition: B-C is conducting./A-C is not conducting. Abnormal condition: B-C is not conducting./A-C is conducting.
7. Do not connect more than one cable to each P+ and N- terminals of the servo amplifier.
8. Always connect BUE and SD terminals. (factory-wired)
9. Connect MSG and SD terminals of the brake unit to a correct destination. Incorrect connection destination results in servo amplifier and brake unit malfunction.
10. For connecting P+ and N- terminals of the servo amplifier to the terminal block, use the cable indicated in (4) (b) in this section.
11. Depending on the main circuit voltage and operation pattern, bus voltage decreases, and that may cause the forced stop deceleration to shift to the dynamic brake deceleration. When dynamic brake deceleration is not required, slow the time to turn off the magnetic contactor.
12. Configure a circuit to turn off EM2 when the main circuit power is turned off to prevent an unexpected restart of the servo amplifier.
13. When wires used for L11 and L21 are thinner than wires used for L1, L2, and L3, use a molded-case circuit breaker.
14. The illustration of the 24 V DC power supply is divided between input signal and output signal for convenience. However, they can be configured by one.

(2) Combination with MT-BR5-(H) resistor unit

(a) 200 V class

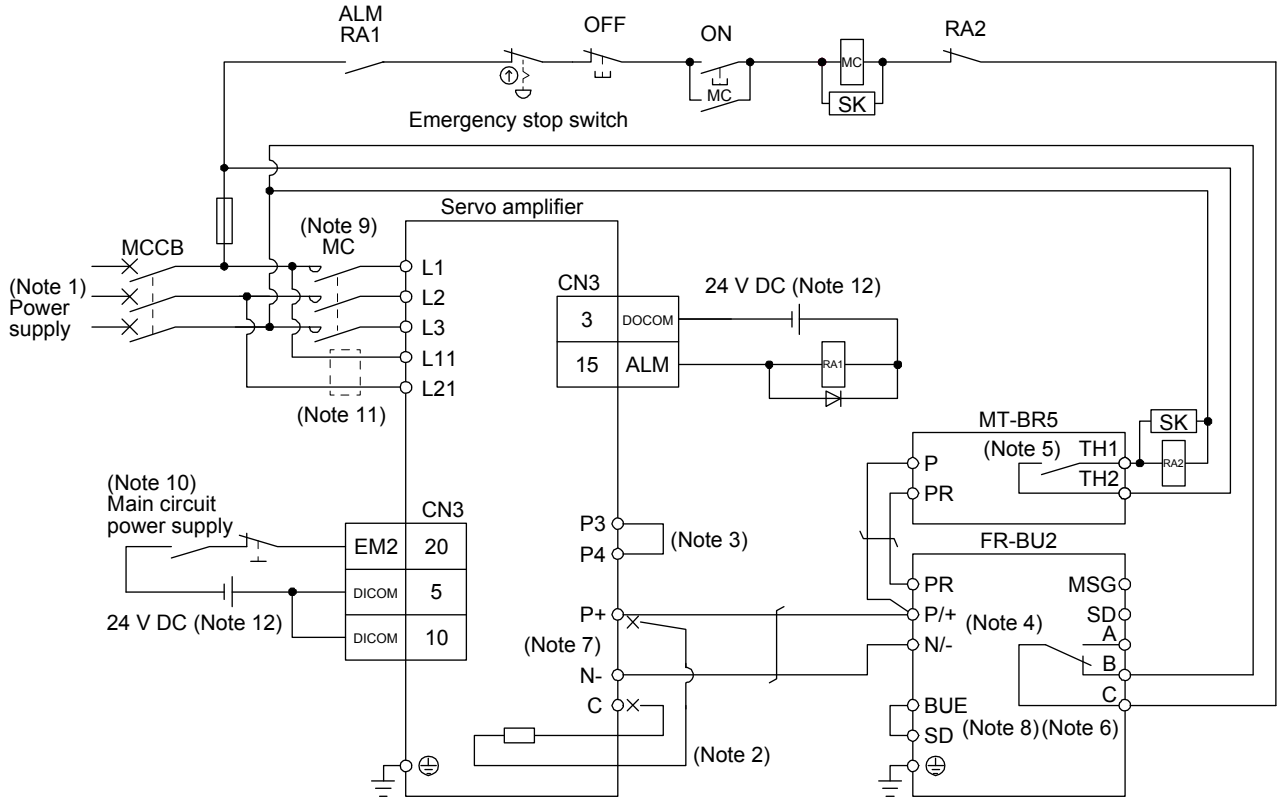

Note 1. For the power supply specifications, refer to section 1.3.

2. Do not connect a supplied regenerative resistor to the P+ and C terminals.

3. Between P3 and P4 is connected by default. When using the power factor improving DC reactor, remove the short bar between P3 and P4. Refer to section 11.11 for details. Additionally, a power factor improving DC reactor and power factor improving AC reactor cannot be used simultaneously.

4. Connect P/+ and N/- terminals of the brake unit to a correct destination. Incorrect connection destination results in servo amplifier and brake unit malfunction.

5. Contact rating: 1a contact, 110 V AC, 5 A/220 V AC, 3 A
Normal condition: TH1-TH2 is not conducting. Abnormal condition: TH1-TH2 is conducting.

6. Contact rating: 230 V AC, 0.3 A/30 V DC, 0.3 A
Normal condition: B-C is conducting./A-C is not conducting. Abnormal condition: B-C is not conducting./A-C is conducting.

7. Do not connect more than one cable to each P+ and N- terminals of the servo amplifier.

8. Always connect BUE and SD terminals. (factory-wired)

9. Depending on the main circuit voltage and operation pattern, bus voltage decreases, and that may cause the forced stop deceleration to shift to the dynamic brake deceleration. When dynamic brake deceleration is not required, slow the time to turn off the magnetic contactor.

10. Configure a circuit to turn off EM2 when the main circuit power is turned off to prevent an unexpected restart of the servo amplifier.

11. When wires used for L11 and L21 are thinner than wires used for L1, L2, and L3, use a molded-case circuit breaker.

12. The illustration of the 24 V DC power supply is divided between input signal and output signal for convenience. However, they can be configured by one.

(b) 400 V class

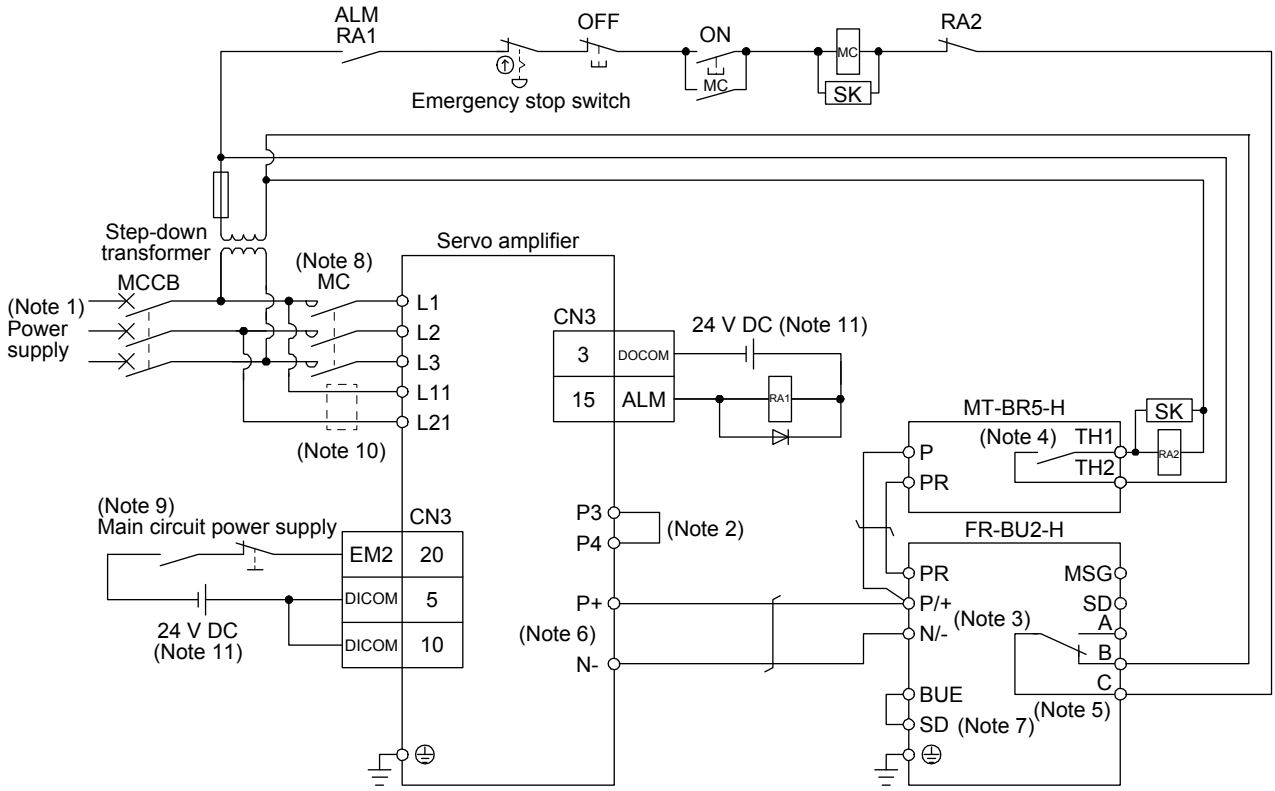

Note 1. For power supply specifications, refer to section 1.3.

2. Between P3 and P4 is connected by default. When using the power factor improving DC reactor, remove the short bar between P3 and P4. Refer to section 11.11 for details. Additionally, a power factor improving DC reactor and power factor improving AC reactor cannot be used simultaneously.

3. Connect P/+ and N/- terminals of the brake unit to a correct destination. Incorrect connection destination results in servo amplifier and brake unit malfunction.

4. Contact rating: 1a contact, 110 V AC, 5 A/220 V AC, 3 A
Normal condition: TH1-TH2 is not conducting. Abnormal condition: TH1-TH2 is conducting.

5. Contact rating: 230 V AC, 0.3 A/30 V DC, 0.3 A
Normal condition: B-C is conducting./A-C is not conducting. Abnormal condition: B-C is not conducting./A-C is conducting.

6. Do not connect more than one cable to each P+ and N- terminals of the servo amplifier.

7. Always connect BUE and SD terminals. (factory-wired)

8. Depending on the main circuit voltage and operation pattern, bus voltage decreases, and that may cause the forced stop deceleration to shift to the dynamic brake deceleration. When dynamic brake deceleration is not required, slow the time to turn off the magnetic contactor.

9. Configure a circuit to turn off EM2 when the main circuit power is turned off to prevent an unexpected restart of the servo amplifier.

10. When wires used for L11 and L21 are thinner than wires used for L1, L2, and L3, use a molded-case circuit breaker.

11. The illustration of the 24 V DC power supply is divided between input signal and output signal for convenience. However, they can be configured by one.

(3) Connection instructions

Keep the wires between the servo amplifier and the brake unit, and between the resistor unit and the brake unit as short as possible. For wires longer than 5 m, twist the wires five times or more per meter. The wires should not exceed 10 m even when the wires are twisted. If wires exceeding 5 m without twisted or exceeding 10 m with or without twisted are used, the brake unit may malfunction.

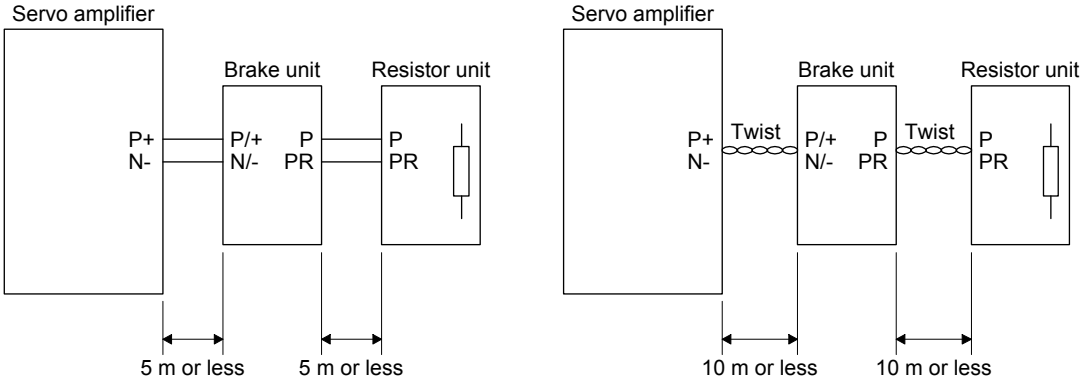

(4) Wires

(a) Wires for the brake unit

For the brake unit, HIV wire (600 V Grade heat-resistant polyvinyl chloride insulated wire) is recommended.

1) Main circuit terminal

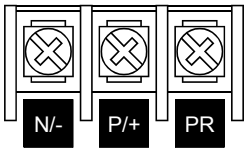

Terminal block

Brake unit		Main circuit terminal screw size	Crimp terminal N/-, P/+, PR, ⏚	Tightening torque [N•m]	Wire size N/-, P/+, PR, ⏚ HIV wire [mm²]	Wire size N/-, P/+, PR, ⏚ AWG
200 V class	FR-BU2-15K	M4	5.5-4	1.5	3.5	12
	FR-BU2-30K	M5	5.5-5	2.5	5.5	10
	FR-BU2-55K	M6	14-6	4.4	14	6
400 V class	FR-BU2-H30K	M4	5.5-4	1.5	3.5	12
	FR-BU2-H55K	M5	5.5-5	2.5	5.5	10
	FR-BU2-H75K	M6	14-6	4.4	14	6

2) Control circuit terminal

> POINT
>
> ●Under tightening can cause a cable disconnection or malfunction. Over tightening can cause a short circuit or malfunction due to damage to the screw or the brake unit.

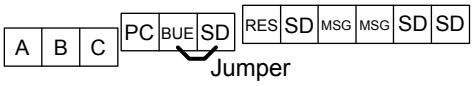

Terminal block

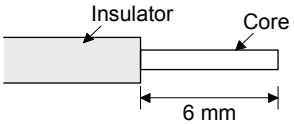

Wire the stripped cable after twisting to prevent the cable from becoming loose. In addition, do not solder it.
Screw size: M3
Tightening torque: 0.5 N•m to 0.6 N•m
Wire size: 0.3 mm^2 to 0.75 mm^2
Screw driver: Small flat-blade screwdriver
(Tip thickness: 0.4 mm/Tip width 2.5 mm)

(b) Cables for connecting the servo amplifier and a distribution terminal block when connecting two sets of the brake unit

Brake unit	Wire size	
	HIV wire [mm^2]	AWG
FR-BU2-15K	8	8

(5) Crimp terminals for P+ and N- terminals of servo amplifier

(a) Recommended crimp terminals

> POINT
>
> ●Some crimp terminals may not be mounted depending on the size. Make sure to use the recommended ones or equivalent ones.

Servo amplifier		Brake unit	Number of connected units	Crimp terminal (Manufacturer)	(Note 1) Applicable tool
200 V class	MR-J4-500TM	FR-BU2-15K	1	FVD5.5-S4 (JST)	a
			2	8-4NS (JST) (Note 2)	b
		FR-BU2-30K	1	FVD5.5-S4 (JST)	a
	MR-J4-700TM	FR-BU2-15K	2	8-4NS (JST) (Note 2)	b
		FR-BU2-30K	1	FVD5.5-S4 (JST)	a
	MR-J4-11KTM	FR-BU2-15K	2	FVD8-6 (JST)	c
		FR-BU2-30K	1	FVD5.5-6 (JST)	a
		FR-BU2-55K	1	FVD14-6 (JST)	d
	MR-J4-15KTM	FR-BU2-15K	2	FVD8-6 (JST)	c
		FR-BU2-30K	1	FVD5.5-6 (JST)	a
		FR-BU2-55K	1	FVD14-6 (JST)	d
	MR-J4-22KTM	FR-BU2-55K	1	FVD14-8 (JST)	d

Servo amplifier		Brake unit	Number of connected units	Crimp terminal (Manufacturer)	(Note 1) Applicable tool
400 V class	MR-J4-500TM4	FR-BU2-H30K	1	FVD5.5-S4 (JST)	a
	MR-J4-700TM4	FR-BU2-H30K	1	FVD5.5-S4 (JST)	a
	MR-J4-11KTM4	FR-BU2-H30K	1	FVD5.5-6 (JST)	a
		FR-BU2-H55K	1	FVD5.5-6 (JST)	a
	MR-J4-15KTM4	FR-BU2-H55K	1	FVD5.5-6 (JST)	a
	MR-J4-22KTM4	FR-BU2-H55K	1	FVD5.5-8 (JST)	a
		FR-BU2-H75K	1	FVD14-8 (JST)	d

Note 1. Symbols in the applicable tool field indicate applicable tools in (4) (b) in this section.
2. Coat the crimping part with an insulation tube.

(b) Applicable tool

Symbol	Servo amplifier-side crimp terminals				
	Crimp terminal	Applicable tool			Manufacturer
		Body	Head	Dice	
a	FDV5.5-S4 FDV5.5-6	YNT-1210S			JST
b	8-4NS	YHT-8S			
c	FVD8-6	YF-1 E-4	YNE-38	DH-111 DH-121	
d	FVD14-6 FVD14-8	YF-1 E-4	YNE-38	DH-112 DH-122	

11.3.4 Dimensions

(1) FR-BU2-(H) brake unit

FR-BU2-15K

[Unit: mm]

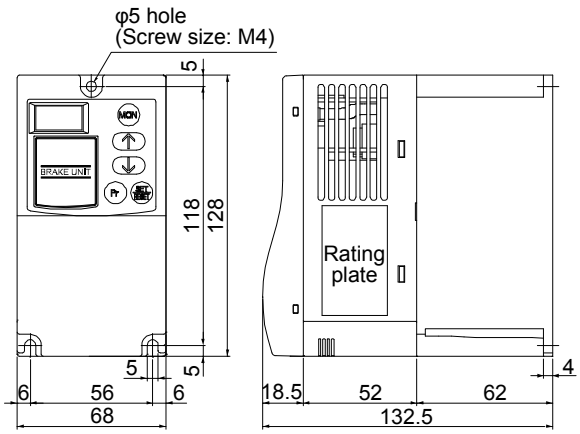

FR-BU2-30K/FR-BU2-H30K

[Unit: mm]

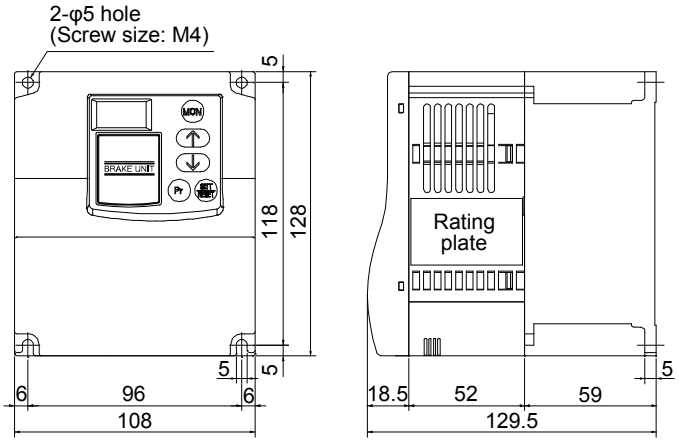

FR-BU2-55K/FR-BU2-H55K/FR-BU2-H75K

[Unit: mm]

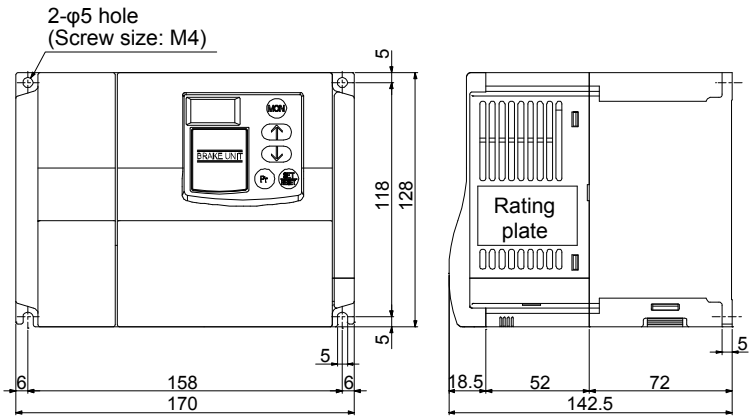

(2) FR-BR-(H) resistor unit

[Unit: mm]

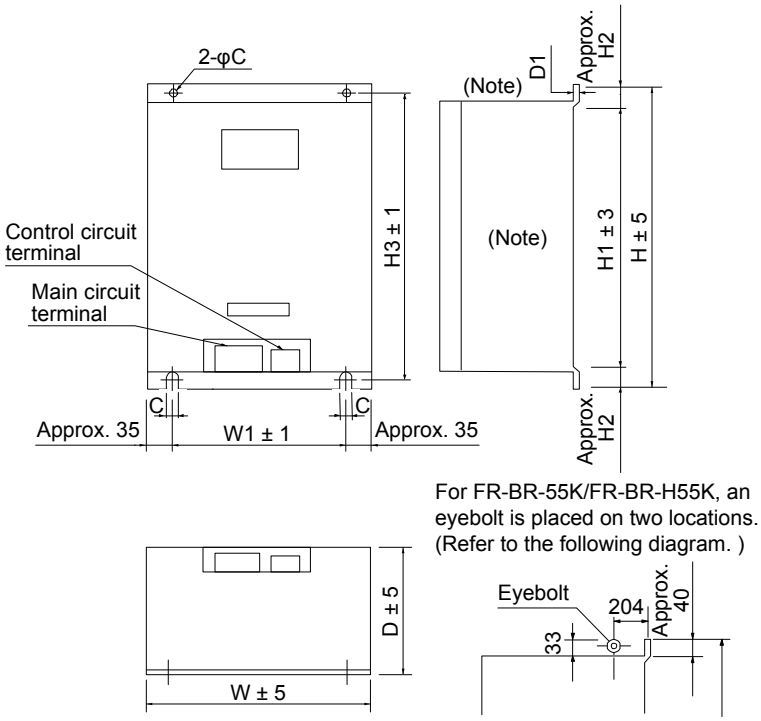

Note. Ventilation ports are provided on both sides and the top. The bottom is open.

Resistor unit		W	W1	H	H1	H2	H3	D	D1	C	Approximate mass [kg]
200 V class	FR-BR-15K	170	100	450	410	20	432	220	3.2	6	15
	FR-BR-30K	340	270	600	560	20	582	220	4	10	30
	FR-BR-55K	480	410	700	620	40	670	450	3.2	12	70
400 V class	FR-BR-H30K	340	270	600	560	20	582	220	4	10	30
	FR-BR-H55K	480	410	700	620	40	670	450	3.2	12	70

(3) MT-BR5-(H) resistor unit

[Unit: mm]

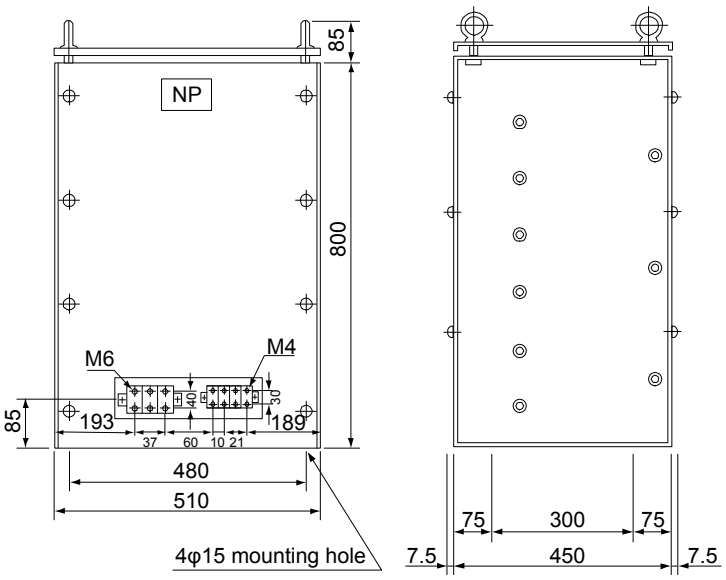

Resistor unit		Resistance	Approximate mass [kg]
200 V class	MT-BR5-55K	2.0 Ω	50
400 V class	MT-BR5-H75K	6.5 Ω	70

11.4 FR-RC-(H) power regeneration converter

POINT

- When using the FR-RC-(H) power regeneration converter, set [Pr. PA04] to "0 0 _ _" to enable EM1 (Forced stop 1).
- When using the FR-RC-(H) power regeneration converter, refer to "Power Regeneration Converter FR-RC Instruction Manual (IB(NA)66330)".

When using the FR-RC-(H) power regeneration converter, set [Pr. PA02] to "_ _ 0 1" and set [Pr. PC20] to "_ _ _ 1".

(1) Selection

The converters can continuously return 75% of the nominal regenerative power. They are applied to the servo amplifiers of the 5 kW to 22 kW.

Power regeneration converter	Nominal regenerative power [kW]	Servo amplifier
FR-RC-15K	15	MR-J4-500TM MR-J4-700TM MR-J4-11KTM MR-J4-15KTM
FR-RC-30K	30	
FR-RC-55K	55	MR-J4-22KTM
FR-RC-H15K	15	MR-J4-500TM4 MR-J4-700TM4
FR-RC-H30K	30	MR-J4-11KTM4 MR-J4-15KTM4
FR-RC-H55K	55	MR-J4-22KTM4

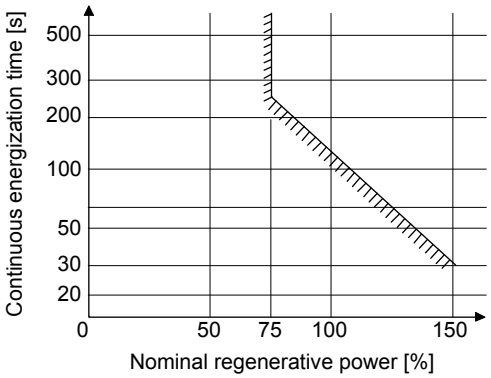

(2) Connection example

POINT
●In this configuration, only the STO function is supported. The forced stop deceleration function is not available.

(a) 200 V class

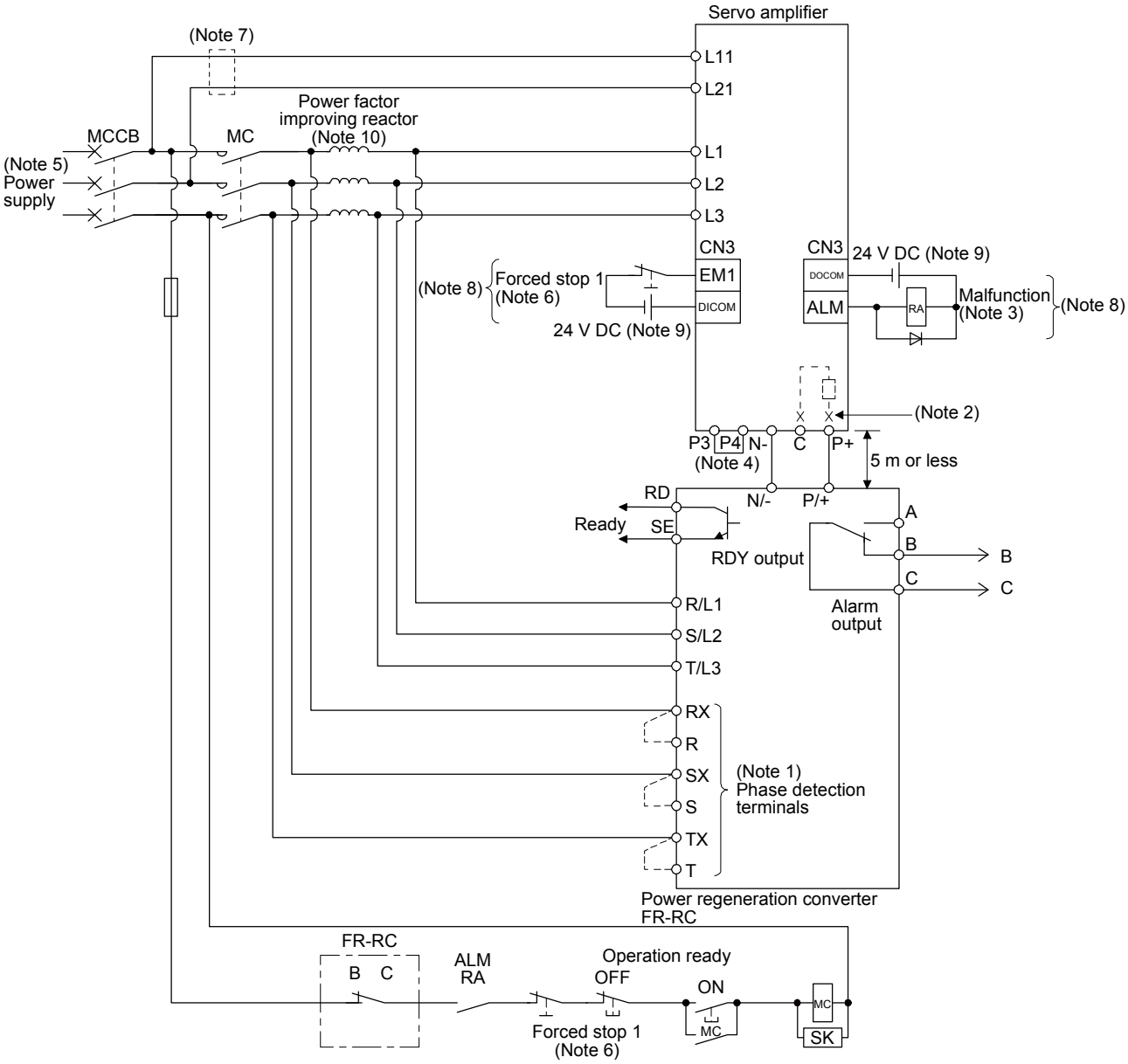

Note 1. When not using the phase detection terminals, fit the jumpers across RX-R, SX-S and TX-T. If the jumpers remain removed, the FR-RC will not operate.
2. When using the servo amplifier of 7 kW or less, make sure to disconnect the wiring of built-in regenerative resistor (5 kW or less: P+ and D, 7 kW: P+ and C). For the servo amplifier of 11 kW to 22 kW, do not connect a supplied regenerative resistor to the P+ and C terminals.
3. If disabling ALM (Malfunction) output with the parameter, configure up the power supply circuit which switches off the magnetic contactor after detection of alarm occurrence on the controller side.
4. Between P3 and P4 is connected by default. When using the power factor improving DC reactor, remove the short bar between P3 and P4. Refer to section 11.11 for details. Additionally, a power factor improving DC reactor and power factor improving AC reactor cannot be used simultaneously.
5. For the power supply specifications, refer to section 1.3.
6. Set [Pr. PA04] to "0 0 _ _" to enable EM1 (Forced stop 1). Configure up the circuit which shuts off main circuit power with external circuit at EM1 (Forced stop 1) off.
7. When wires used for L11 and L21 are thinner than wires used for L1, L2, and L3, use a molded-case circuit breaker.
8. This diagram shows sink I/O interface. For source I/O interface, refer to section 3.8.3.
9. The illustration of the 24 V DC power supply is divided between input signal and output signal for convenience. However, they can be configured by one.
10. For selection of power factor improving AC reactors, refer to "Power Regeneration Converter FR-RC Instruction Manual (IB(NA)66330)".

(b) 400 V class

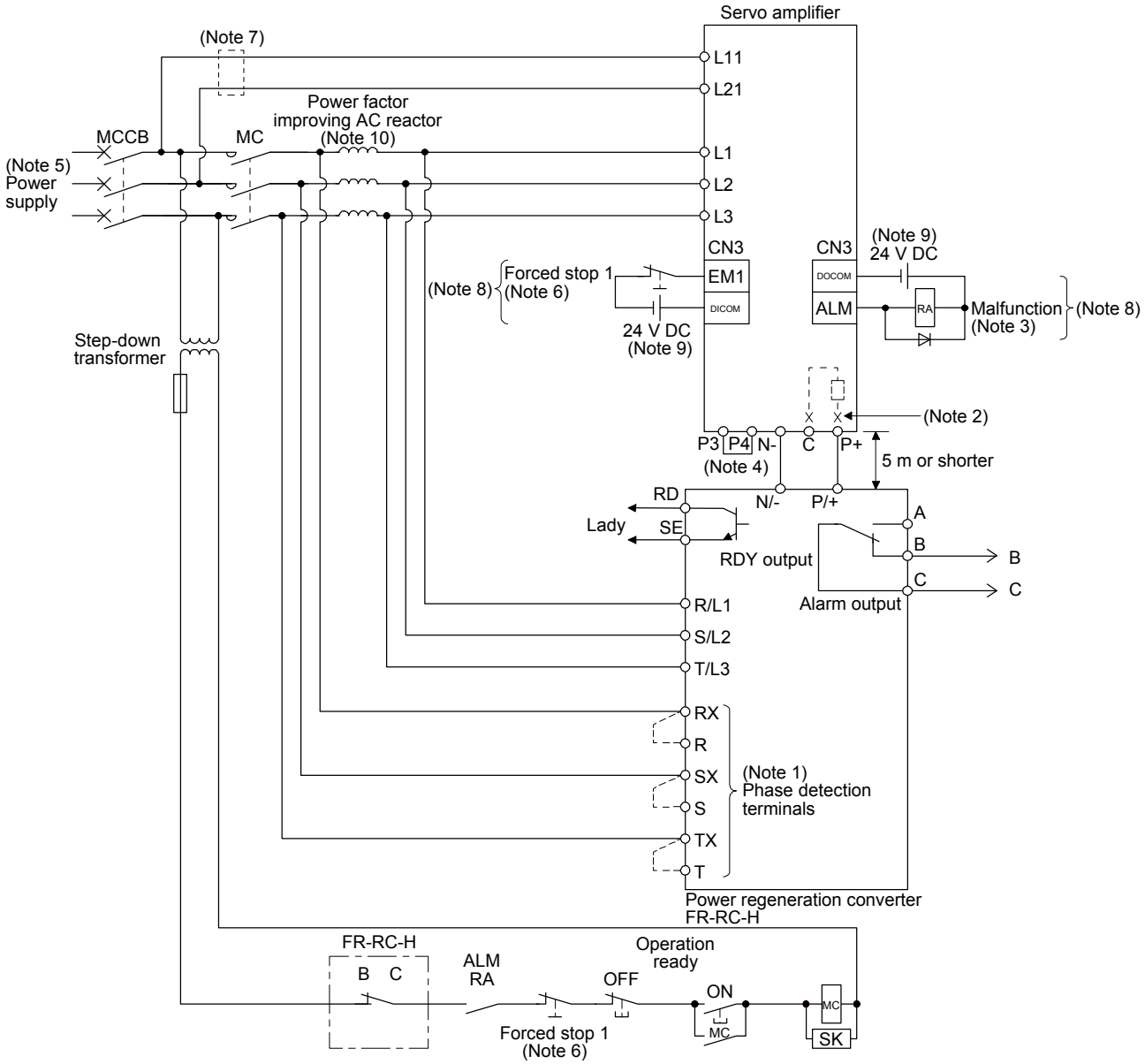

Note 1. When not using the phase detection terminals, fit the jumpers across RX-R, SX-S and TX-T. If the jumpers remain removed, the FR-RC-H will not operate.
2. For the servo amplifier of 5 kW and 7 kW, always disconnect the lead wire of built-in regenerative resistor, which is connected to P+ and C terminals. For the servo amplifier of 11 kW to 22 kW, do not connect a supplied regenerative resistor to the P+ and C terminals.
3. If disabling ALM (Malfunction) output with the parameter, configure up the power supply circuit which switches off the magnetic contactor after detection of alarm occurrence on the controller side.
4. Between P3 and P4 is connected by default. When using the power factor improving DC reactor, remove the short bar between P3 and P4. Refer to section 11.11 for details. Additionally, a power factor improving DC reactor and power factor improving AC reactor cannot be used simultaneously.
5. For the power supply specifications, refer to section 1.3.
6. Set [Pr. PA04] to "0 0 _ _" to enable EM1 (Forced stop 1). Configure up the circuit which shuts off main circuit power with external circuit at EM1 (Forced stop 1) off.
7. When wires used for L11 and L21 are thinner than wires used for L1, L2, and L3, use a molded-case circuit breaker.
8. This diagram shows sink I/O interface. For source I/O interface, refer to section 3.8.3.
9. The illustration of the 24 V DC power supply is divided between input signal and output signal for convenience. However, they can be configured by one.
10. For selection of power factor improving AC reactors, refer to "Power Regeneration Converter FR-RC Instruction Manual (IB(NA)66330)".

(3) Dimensions

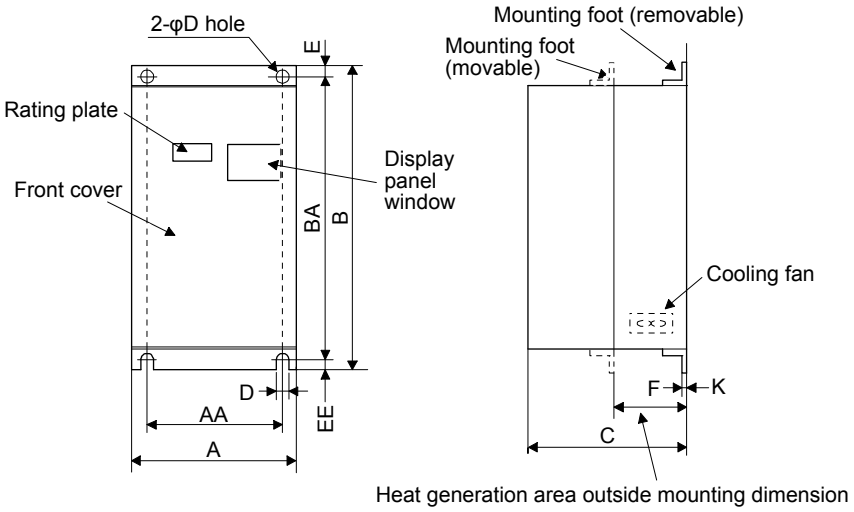

[Unit: mm]

Power regeneration converter	A	AA	B	BA	C	D	E	EE	K	F	Approximate mass [kg]
FR-RC-15K	270	200	450	432	195	10	10	8	3.2	87	19
FR-RC-30K	340	270	600	582	195	10	10	8	3.2	90	31
FR-RC-55K	480	410	700	670	250	12	15	15	3.2	135	55
FR-RC-H15K	340	270	600	582	195	10	10	8	3.2	90	31
FR-RC-H30K											
FR-RC-H55K	480	410	700	670	250	12	15	15	3.2	135	55

(4) Mounting hole machining dimensions

The following shows mounting hole dimensions for mounting the heat generation area of the power regeneration converter outside a cabinet as measures against heat generation when the converter is mounted in an enclosed type cabinet.

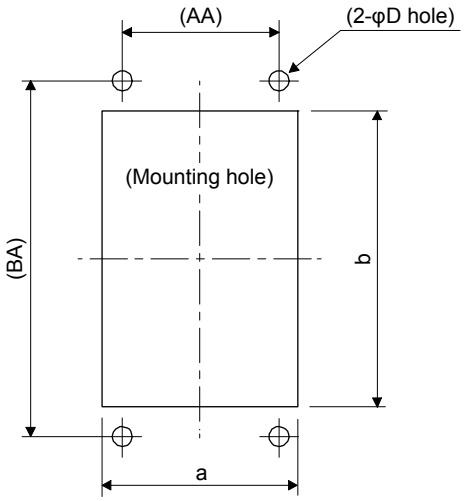

[Unit: mm]

Power regeneration converter	a	b	D	AA	BA
FR-RC-15K	260	412	10	200	432
FR-RC-30K	330	562	10	270	582
FR-RC-55K	470	642	12	410	670
FR-RC-H15K	330	562	10	270	582
FR-RC-H30K					
FR-RC-H55K	470	642	12	410	670

11.5 FR-CV-(H) power regeneration common converter

POINT

- For details of the power regeneration common converter FR-CV-(H), refer to the FR-CV Installation Guide (IB(NA)0600075).
- Do not supply power to the main circuit power supply terminals (L1/L2/L3) of the servo amplifier. Otherwise, servo amplifier and FR-CV-(H) will malfunction.
- Connect the DC power supply between the FR-CV-(H) and servo amplifier with correct polarity. Connection with incorrect polarity will fail the FR-CV-(H) and servo amplifier.
- Two or more FR-CV-(H)s cannot be installed to improve regeneration capability. Two or more FR-CV-(H)s cannot be connected to the same DC power supply line.
- When using FR-CV-(H), set [Pr. PA04] to "0 0 _ _" to enable EM1 (Forced stop 1).

When using the FR-CV-(H) power regeneration common converter, set [Pr. PA02] to "_ _ 0 1" and set [Pr. PC20] to "_ _ _ 1".

11.5.1 Model designation

The following describes what each block of a model name indicates. Not all combinations of the symbols are available.

F R - C V - H 7 . 5 K

Capacity

Symbol	Capacity [kW]
7.5K	7.5
11K	11
15K	15
22K	22
30K	30
37K	37
55K	55

Symbol	Voltage class
None	200 V class
H	400 V class

11.5.2 Selection

(1) 200 V class

FR-CV power regeneration common converter can be used for the 200 V class servo amplifier of 100 W to 22 kW. The following shows the restrictions on using the FR-CV.

(a) Up to six servo amplifiers can be connected to one FR-CV.

(b) FR-CV capacity [W] ≥ Total of rated capacities [W] × 2 of servo amplifiers connected to FR-CV

(c) The total of used servo motor rated currents should be equal to or less than the applicable current [A] of the FR-CV.

(d) Among the servo amplifiers connected to the FR-CV, the servo amplifier of the maximum capacity should be equal to or less than the maximum connectable capacity [W].

The following table lists the restrictions.

Item	FR-CV-_						
	7.5K	11K	15K	22K	30K	37K	55K
Maximum number of connected servo amplifiers	6						
Total of connectable servo amplifier capacities [kW]	3.75	5.5	7.5	11	15	18.5	27.5
Total of connectable servo motor rated currents [A]	33	46	61	90	115	145	215
Maximum servo amplifier capacity [kW]	3.5	5	7	11	15	15	22

When using the FR-CV, always install the dedicated stand-alone reactor (FR-CVL).

Power regeneration common converter	Dedicated stand-alone reactor
FR-CV-7.5K(-AT)	FR-CVL-7.5K
FR-CV-11K(-AT)	FR-CVL-11K
FR-CV-15K(-AT)	FR-CVL-15K
FR-CV-22K(-AT)	FR-CVL-22K
FR-CV-30K(-AT)	FR-CVL-30K
FR-CV-37K	FR-CVL-37K
FR-CV-55K	FR-CVL-55K

(2) 400 V class

FR-CV-H power regeneration common converter can be used for the servo amplifier of 11 kW to 22 kW. The following shows the restrictions on using the FR-CV-H.

(a) Up to two servo amplifiers can be connected to one FR-CV-H.

(b) FR-CV-H capacity [W] ≥ Total of rated capacities [W] × 2 of servo amplifiers connected to FR-CV-H.

(c) The total of used servo motor rated currents should be equal to or less than the applicable current [A] of the FR-CV-H.

(d) Among the servo amplifiers connected to the FR-CV-H, the servo amplifier of the maximum capacity should be equal to or less than the maximum connectable capacity [W].

The following table lists the restrictions.

Item	FR-CV-H_			
	22K	30K	37K	55K
Maximum number of connected servo amplifiers	1			2
Total of connectable servo amplifier capacities [kW]	11	15	18.5	27.5
Total of connectable servo motor rated currents [A]	43	57	71	110
Maximum servo amplifier capacity [kW]	11	15	15	22

When using the FR-CV-H, always install the dedicated stand-alone reactor (FR-CVL-H).

Power regeneration common converter	Dedicated stand-alone reactor
FR-CV-H22K(-AT)	FR-CVL-H22K
FR-CV-H30K(-AT)	FR-CVL-H30K
FR-CV-H37K	FR-CVL-H37K
FR-CV-H55K	FR-CVL-H55K

(3) Connection diagram

POINT
●In this configuration, only the STO function is supported. The forced stop deceleration function is not available.

(a) 200 V class

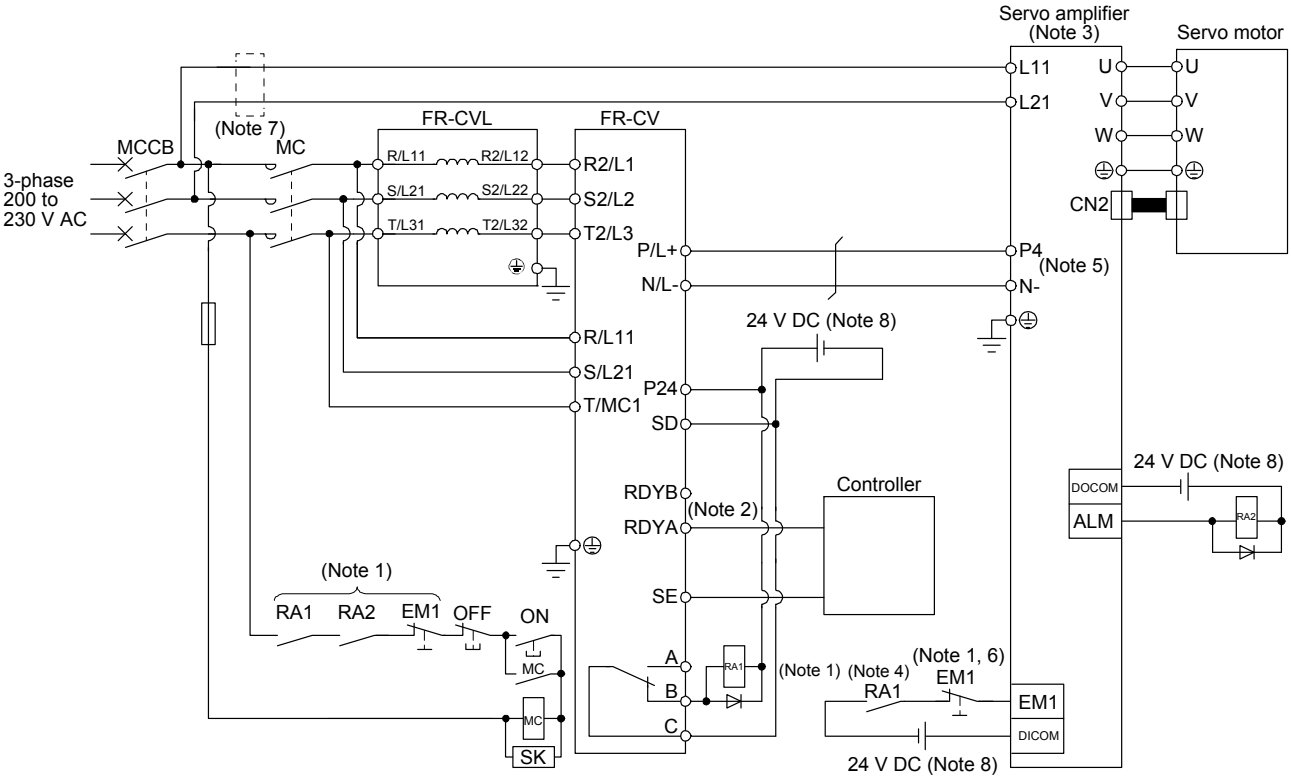

Note 1. Configure a sequence that will shut off main circuit power in the following.
- An alarm occurred at FR-CV or servo amplifier.
- EM1 (Forced stop 1) is enabled.

2. For the servo amplifier, configure a sequence that will switch the servo-on after the FR-CV is ready.
3. When using the servo amplifier of 7 kW or less, make sure to disconnect the wiring of built-in regenerative resistor (5 kW or less: P+ and D, 7 kW: P+ and C).
4. Configure a sequence that will make a stop with the emergency stop input of the controller if an alarm occurs in the FR-CV. When the controller does not have an emergency stop input, use the forced stop input of the servo amplifier to make a stop as shown in the diagram.
5. When using FR-CV, always disconnect wiring between P3 and P4 terminals.
6. Set [Pr. PA04] to "0 0 _ _" to enable EM1 (Forced stop 1).
7. When wires used for L11 and L21 are thinner than wires used for L1, L2, and L3, use a molded-case circuit breaker.
8. The illustration of the 24 V DC power supply is divided between input signal and output signal for convenience. However, they can be configured by one.

(b) 400 V class

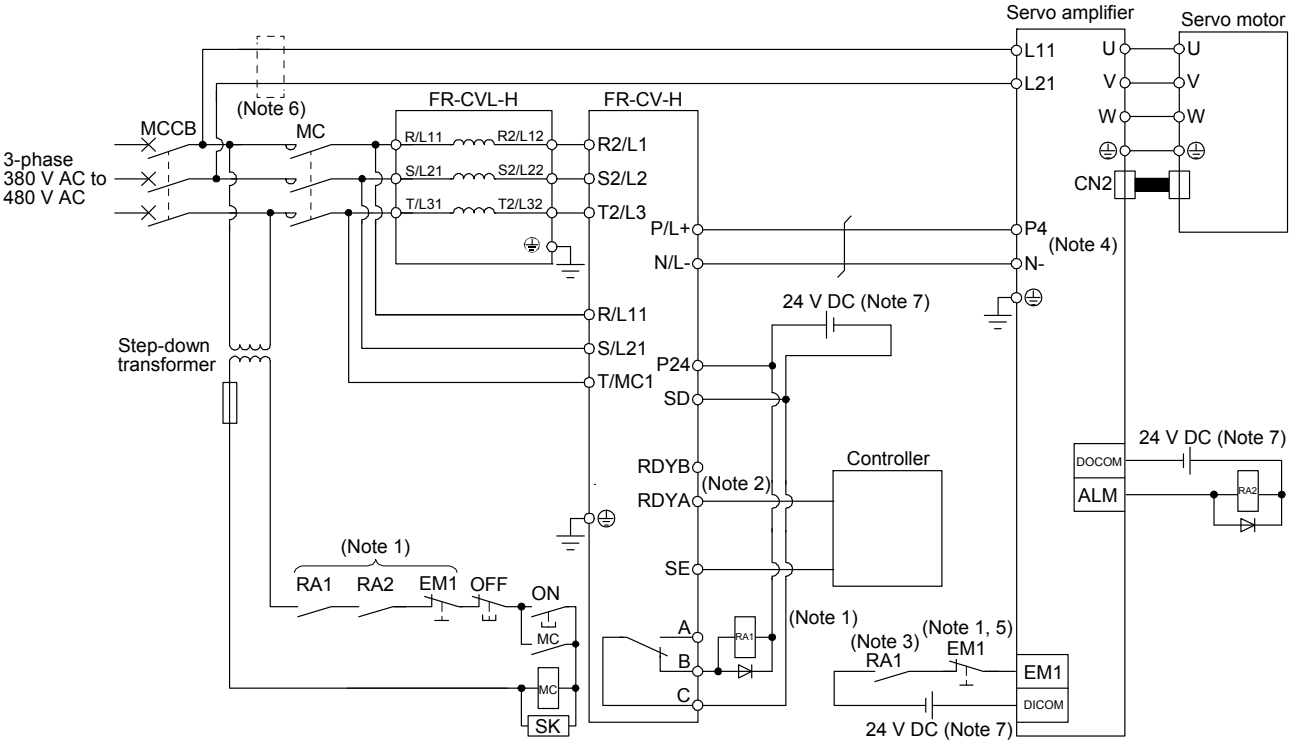

Note 1. Configure a sequence that will shut off main circuit power in the following.
- An alarm occurred at FR-CV-H or servo amplifier.
- EM1 (Forced stop 1) is enabled.

2. For the servo amplifier, configure a sequence that will switch the servo-on after the FR-CV-H is ready.
3. Configure a sequence that will make a stop with the emergency stop input of the controller if an alarm occurs in the FR-CV-H. When the controller does not have an emergency stop input, use the forced stop input of the servo amplifier to make a stop as shown in the diagram.
4. When using FR-CV-H, always disconnect wiring between P3 and P4 terminals.
5. Set [Pr. PA04] to "0 0 _ _" to enable EM1 (Forced stop 1).
6. When wires used for L11 and L21 are thinner than wires used for L1, L2, and L3, use a molded-case circuit breaker.
7. The illustration of the 24 V DC power supply is divided between input signal and output signal for convenience. However, they can be configured by one.

(4) Selection example of wires used for wiring

POINT

●Selection conditions of wire size are as follows.
600 V grade heat-resistant polyvinyl chloride insulated wire (HIV wire)
Construction condition: Single wire set in midair

(a) Wire size

1) Between P and P4, and between N and N-

The following table indicates the connection wire sizes of the DC power supply (P4, N- terminals) between the FR-CV and servo amplifier.

Total of servo amplifier capacities [kW]	Wire [mm^2]
1 or less	2 (AWG 14)
2	3.5 (AWG 12)
5	5.5 (AWG 10)
7	8 (AWG 8)
11	14 (AWG 6)
15	22 (AWG 4)
22	50 (AWG 1/0)
27.5	50 (AWG 1/0)

The following table indicates the connection wire sizes of the DC power supply (P4, N- terminals) between the FR-CV-H and servo amplifier.

Total of servo amplifier capacities [kW]	Wire [mm^2]
11	8 (AWG 8)
15	8 (AWG 8)
22	14 (AWG 6)
27.5	14 (AWG 6)

(2) Grounding

For grounding, use the wire of the size equal to or greater than that indicated in the following table, and make it as short as possible.

Power regeneration common converter	Grounding wire size [mm^2]
FR-CV-7.5K to FR-CV-15K	8 (AWG 8)
FR-CV-22K/FR-CV-30K	22 (AWG 4)
FR-CV-37K/FR-CV-55K	38 (AWG 2)
FR-CV-H22K/FR-CV-H30K	8 (AWG 8)
FR-CV-H37K/FR-CV-H55K	14 (AWG 6)

(b) Example of selecting the wire sizes

1) 200 V class

When connecting multiple servo amplifiers, always use junction terminals for wiring the servo amplifier terminals P4 and N-. Also, connect the servo amplifiers in the order of larger to smaller capacities.

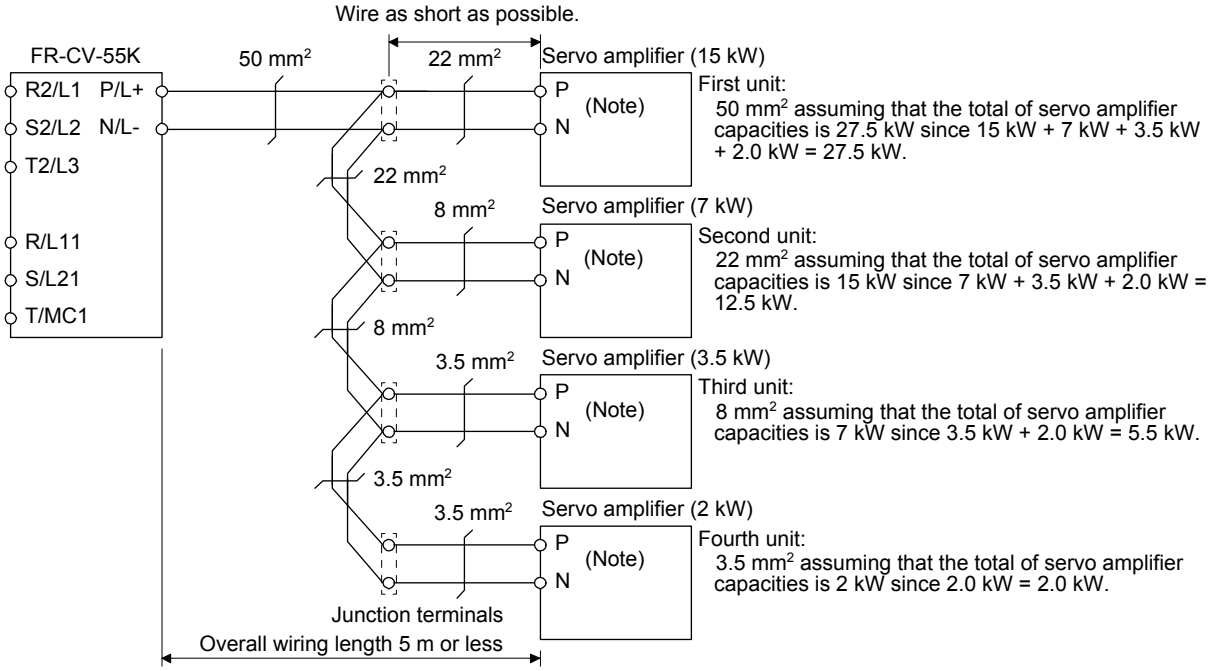

Note. When using the servo amplifier of 7 kW or less, make sure to disconnect the wiring of built-in regenerative resistor (5 kW or less: P+ and D, 7 kW: P+ and C).

2) 400 V class

When connecting two servo amplifiers of 11 kW, always use junction terminals for wiring the servo amplifier terminals P4, N-.

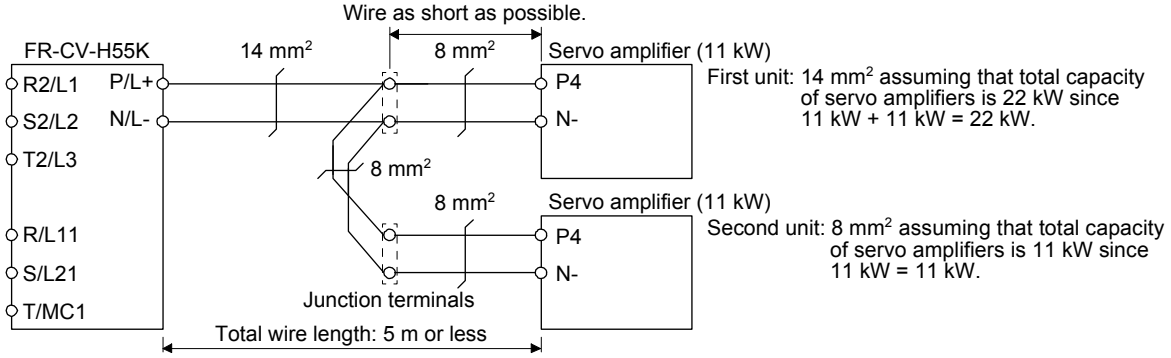

(5) Other precautions

(a) When using the FR-CV-(H), always install the dedicated stand-alone reactor (FR-CVL-(H)). Do not use the power factor improving AC reactor (FR-HAL-(H)) or power factor improving DC reactor (FR-HEL-(H)).

(b) The inputs/outputs (main circuits) of the FR-CV-(H) and servo amplifiers include high-frequency components and may provide electromagnetic wave interference to communication equipment (such as AM radios) used near them. In this case, interference can be reduced by installing the radio noise filter (FR-BIF(-H)) or line noise filter (FR-BSF01, FR-BLF).

(c) The overall wiring length for connection of the DC power supply between the FR-CV-(H) and servo amplifiers should be 5 m or less, and the wiring must be twisted.

(6) Specifications

Item \ Power regeneration common converter FR-CV-_			7.5K	11K	15K	22K	30K	37K	55K
Total of connectable servo amplifier capacities		[kW]	3.75	5.5	7.5	11	15	18.5	27.5
Maximum servo amplifier capacity		[kW]	3.5	5	7	11	15	15	22
Output	Total of connectable servo motor rated currents	[A]	33	46	61	90	115	145	215
Output	Regenerative braking torque	Short-time rating	Total capacity of applicable servo motors, 300% torque, 60 s (Note 1)						
Output	Regenerative braking torque	Continuous rating	100% torque						
Power	Rated input AC voltage/frequency		3-phase 200 V AC to 220 V AC, 50 Hz, 200 V AC to 230 V AC, 60 Hz						
Power	Permissible AC voltage fluctuation		3-phase 170 V AC to 242 V AC, 50 Hz, 170 V AC to 253 V AC, 60 Hz						
Power	Permissible frequency fluctuation		±5%						
Power	Power supply capacity (Note 2)	[kVA]	17	20	28	41	52	66	100
IP rating (JEM 1030), cooling method			Open type (IP00), forced cooling						
Environment	Ambient temperature		-10 °C to 50 °C (non-freezing)						
Environment	Ambient humidity		5 %RH to 90 %RH (non-condensing)						
Environment	Ambience		Indoors (no direct sunlight), free from corrosive gas, flammable gas, oil mist, dust, and dirt						
Altitude, vibration resistance			1000 m or less above sea level, 5.9 m/s^2						
Molded-case circuit breaker or earth-leakage current breaker			30AF 30A	50AF 50A	100AF 75A	100AF 100A	125AF 125A	125AF 125A	225AF 175A
Magnetic contactor			S-N20 S-T21	S-N35 S-T35	S-N50 S-T50	S-N65 S-T65	S-N80 S-T80	S-N95 S-T100	S-N125

Item \ Power regeneration common converter FR-CV-H_			22K	30K	37K	55K
Total of connectable servo amplifier capacities [kW]			11	15	185	27.5
Maximum servo amplifier capacity [kW]			11	15	15	22
Output	Total of connectable servo motor rated currents [A]		43	57	71	110
Output	Regenerative braking torque	Short-time rating	Total capacity of applicable servo motors, 300% torque, 60 s (Note 1)			
Output	Regenerative braking torque	Continuous rating	100% torque			
Power supply	Rated input AC voltage/frequency		3-phase 380 V AC to 480 V AC, 50 Hz/60 Hz			
Power supply	Permissible AC voltage fluctuation		3-phase 323 V AC to 528 V AC, 50 Hz/60 Hz			
Power supply	Permissible frequency fluctuation		±5%			
Power supply	Power supply capacity (Note 2) [kVA]		41	52	66	100
IP rating (JEM 1030), cooling method			Open type (IP00), forced cooling			
Environment	Ambient temperature		-10 °C to 50 °C (non-freezing)			
Environment	Ambient humidity		5 %RH to 90 %RH (non-condensing)			
Environment	Ambience		Indoors (no direct sunlight), free from corrosive gas, flammable gas, oil mist, dust, and dirt			
Altitude, vibration resistance			1000 m or less above sea level, 5.9 m/s^2			
Molded-case circuit breaker or earth-leakage current breaker			50AF 50A	60AF 60A	100AF 75A	100AF 100A
Magnetic contactor			S-N25 S-T25	S-N35 S-T35	S-N50 S-T50	S-N65 S-T65

Note 1. This is the time when the protective function of the FR-CV-(H) is activated. The protective function of the servo amplifier is activated in the time indicated in section 10.1.

2. The specified value is the power supply capacity of FR-CV-(H). The total power supply capacities of the connected servo amplifiers are actually required.

11.6 Junction terminal block PS7DW-20V14B-F (recommended)

(1) Usage

Always use the junction terminal block (PS7W-20V14B-F(Toho Technology Corp. Kyoto factory)) with the option cable (MR-J2HBUS_M) as a set. A connection example is shown below.

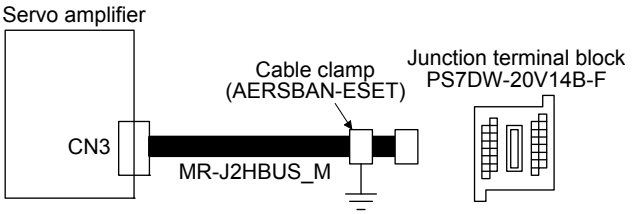

Ground the junction terminal block cable on the junction terminal block side with the supplied cable clamp fitting (AERSBAN-ESET).

(2) Connection of MR-J2HBUS_M cable and junction terminal block

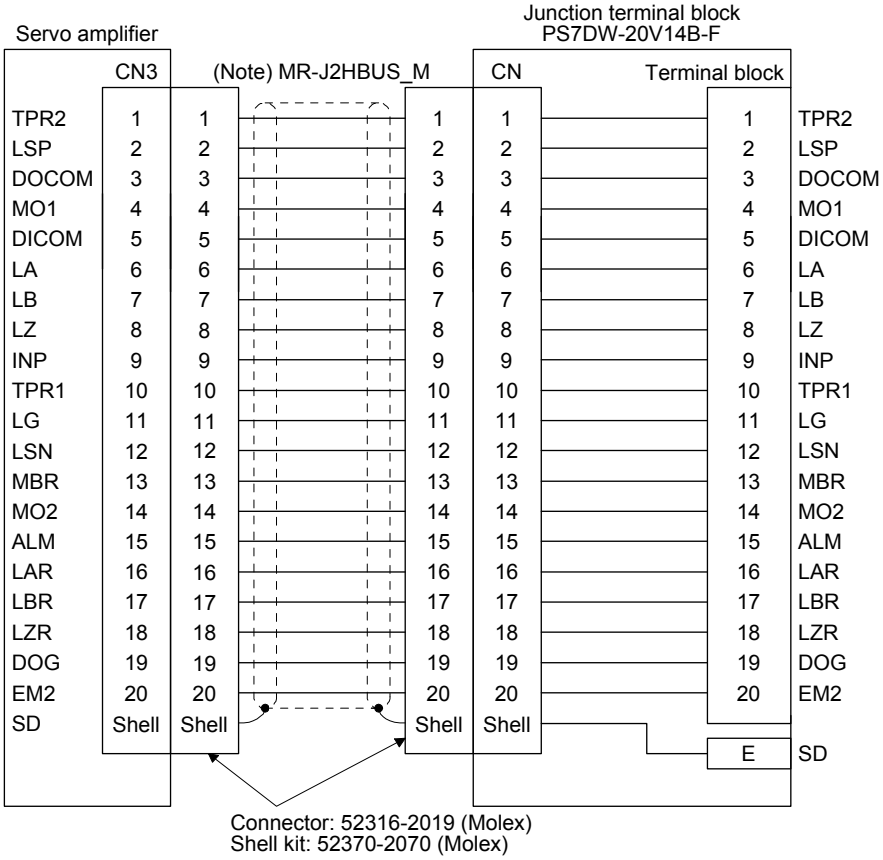

Note. Symbol indicating cable length is put in _.

05: 0.5 m

1: 1 m

5: 5 m

(3) Dimensions of junction terminal block

[Unit: mm]

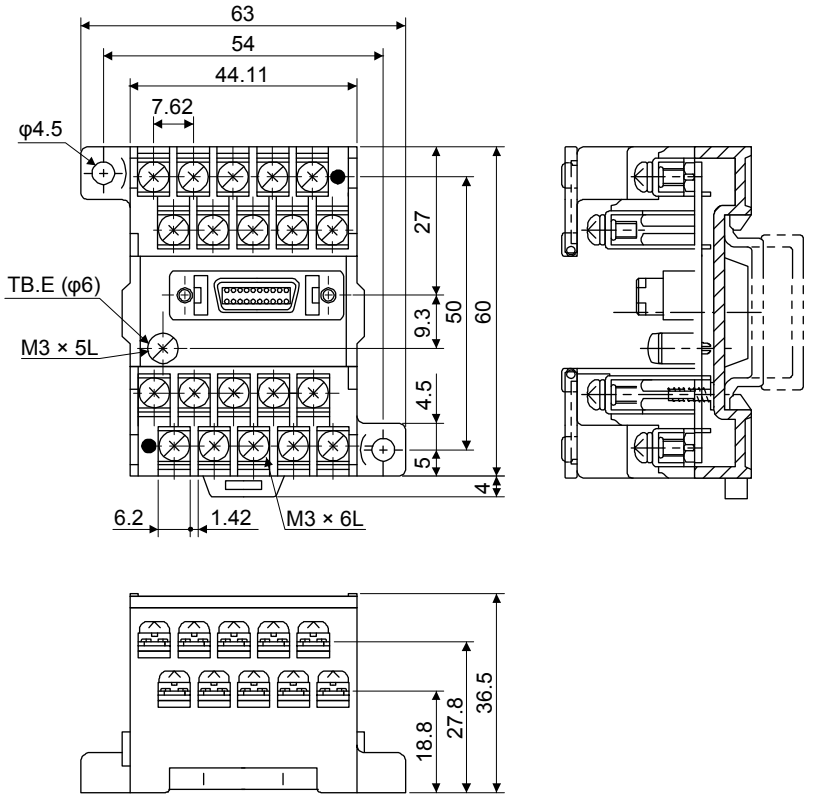

11.7 MR Configurator2

POINT
●The MR-J4-_TM_ servo amplifier is supported with software version 1.45X or later.

MR Configurator2 (SW1DNC-MRC2-_) uses the communication function of the servo amplifier to perform parameter setting changes, graph display, test operation, etc. on a personal computer.

11.7.1 Specifications

Item	Description
Project	Create/read/save/delete project, system setting, and print
Parameter	Parameter setting
Monitor	Display all, I/O monitor, graph, and ABS data display
Diagnosis	Alarm display, alarm onset data, drive recorder, no motor rotation, system configuration, life diagnosis, machine diagnosis, fully closed loop diagnosis (Note 2), and linear diagnosis (Note 3)
Test operation	Jog mode (Note 4), positioning operation, motor-less operation (Note 1), DO forced output, program operation, single-step feed and test mode information
Adjustment	One-touch tuning, tuning, and machine analyzer
Others	Servo assistant, parameter setting range update, switch display language, and help display

Note 1. The motor-less operation cannot be used in the fully closed loop control mode, linear servo motor control mode, or DD motor control mode.
2. This is available only in the fully closed loop control mode.
3. This is available only in the linear servo motor control mode.
4. This is available in the standard control mode, fully closed loop control mode, and DD motor control mode.

11.7.2 System configuration

(1) Components

To use this software, the following components are required in addition to the servo amplifier and servo motor.

Equipment		Description
(Note 1, 2, 3, 4, 5) Personal computer	OS	Microsoft® Windows® 10 Home Microsoft® Windows® 10 Pro Microsoft® Windows® 10 Enterprise Microsoft® Windows® 10 Education Microsoft® Windows® 8.1 Enterprise Microsoft® Windows® 8.1 Pro Microsoft® Windows® 8.1 Microsoft® Windows® 8 Enterprise Microsoft® Windows® 8 Pro Microsoft® Windows® 8 Microsoft® Windows® 7 Enterprise Microsoft® Windows® 7 Ultimate Microsoft® Windows® 7 Professional Microsoft® Windows® 7 Home Premium Microsoft® Windows® 7 Starter Microsoft® Windows Vista® Enterprise Microsoft® Windows Vista® Ultimate Microsoft® Windows Vista® Business Microsoft® Windows Vista® Home Premium Microsoft® Windows Vista® Home Basic Microsoft® Windows® XP Professional, Service Pack3 or later Microsoft® Windows® XP Home Edition, Service Pack3 or later
	CPU (recommended)	Desktop personal computer: Intel® Celeron® processor 2.8 GHz or more Laptop personal computer: Intel® Pentium® M processor 1.7 GHz or more
	Memory (recommended)	512 MB or more (for 32-bit OS) and 1 GB or more (for 64-bit OS)
	Hard Disk	1 GB or more
	Communication interface	USB port
Browser	Windows® Internet Explorer® 4.0 or more	
Display	One whose resolution is 1024 × 768 or more and that can provide a high color (16 bit) display. Connectable with the above personal computer.	
Keyboard	Connectable with the above personal computer.	
Mouse	Connectable with the above personal computer.	
Printer	Connectable with the above personal computer.	
USB cable	MR-J3USBCBL3M	

Note 1. On some personal computers, MR Configurator2 may not run properly.

2. The following functions cannot be used.
   - Windows Program Compatibility mode
   - Fast User Switching
   - Remote Desktop
   - Large Fonts Mode (Display property)
   - DPI settings other than 96 DPI (Display property)

   For 64-bit operating system, this software is compatible with Windows® 7 and Windows® 8.

3. When Windows® 7 or later is used, the following functions cannot be used.
   - Windows XP Mode
   - Windows touch

4. When using this software with Windows Vista® or later, log in as a user having USER authority or higher.

5. When Windows® 8 or later is used, the following functions cannot be used.
   - Hyper-V
   - Modern UI style

(2) Connection with servo amplifier

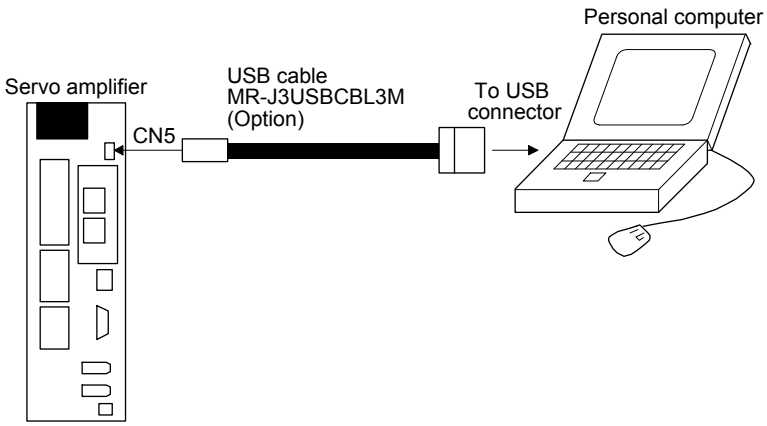

11.7.3 Precautions for using USB communication function

Note the following to prevent an electric shock and malfunction of the servo amplifier.

(1) Power connection of personal computers
Connect your personal computer with the following procedures.

(a) When you use a personal computer with AC power supply
1) When using a personal computer with a three-core power plug or power plug with grounding wire, use a three-pin socket or ground the grounding wire.

2) When your personal computer has two-core plug and has no grounding wire, connect the personal computer to the servo amplifier with the following procedures.

a) Disconnect the power plug of the personal computer from an AC power socket.

b) Check that the power plug was disconnected and connect the device to the servo amplifier.

c) Connect the power plug of the personal computer to the AC power socket.

(b) When you use a personal computer with battery
You can use as it is.

(2) Connection with other devices using servo amplifier communication function
When the servo amplifier is charged with electricity due to connection with a personal computer and the charged servo amplifier is connected with other devices, the servo amplifier or the connected devices may malfunction. Connect the servo amplifier and other devices with the following procedures.

(a) Shut off the power of the device for connecting with the servo amplifier.

(b) Shut off the power of the servo amplifier which was connected with the personal computer and check the charge lamp is off.

(c) Connect the device with the servo amplifier.

(d) Turn on the power of the servo amplifier and the device.

11.8 Battery

> POINT
>
> ●Refer to app. 2 and 3 for battery transportation and the new EU Battery Directive.

This battery is used to construct an absolute position detection system. Refer to chapter 12 for construction of the absolute position detection system.

11.8.1 Selection of battery

The available batteries vary depending on servo amplifiers. Select a required battery.

(1) Applications of the batteries

Model	Name	Application	Built-in battery
MR-BAT6V1SET-A	Battery	For absolute position data backup	MR-BAT6V1
MR-BAT6V1BJ	Battery for junction battery cable	For transporting a servo motor and servo amplifier apart	
MR-BT6VCASE	Battery case	For absolute position data backup of multi-axis servo motor	MR-BAT6V1

(2) Combinations of batteries and the servo amplifier

Model	MR-J4-_TM_
MR-BAT6V1SET-A	○
MR-BAT6V1BJ	○ (Note)
MR-BT6VCASE	○

Note. For using the MR-J4-350TM4, contact your local sales office.

11.8.2 MR-BAT6V1SET-A battery

> POINT
>
> ●For the specifications and year and month of manufacture of the built-in MR-BAT6V1 battery, refer to section 11.8.5.

(1) Parts identification and dimensions

[Unit: mm]

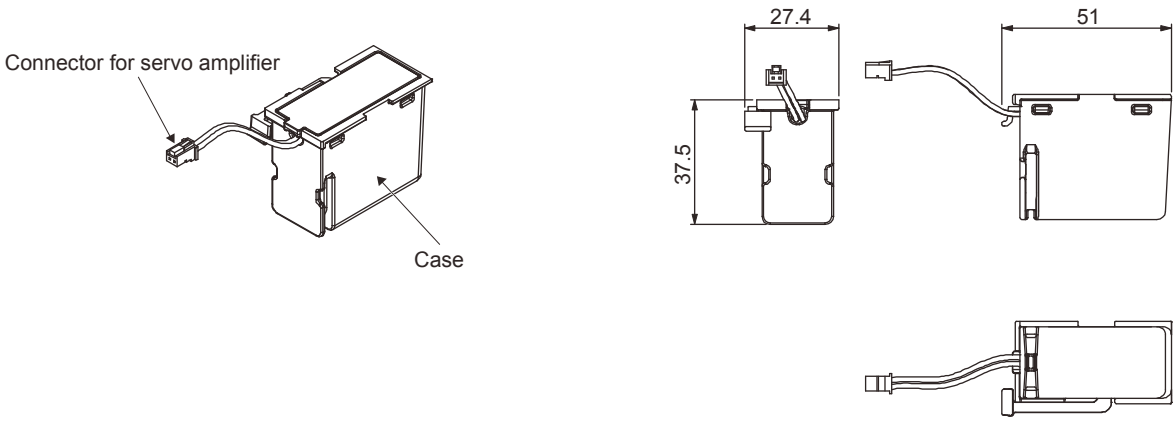

Mass: 55 [g] (including MR-BAT6V1 battery)

(2) Battery mounting
Connect as follows.

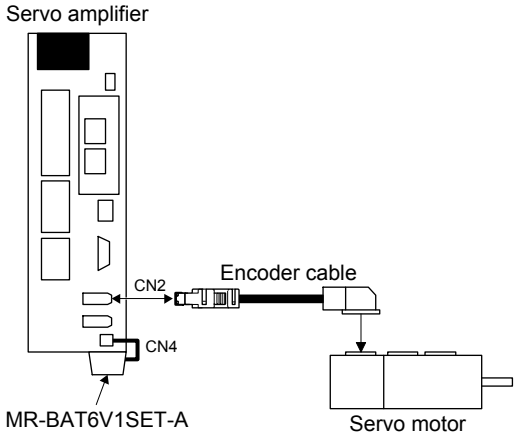

(3) Battery replacement procedure

⚠WARNING	●Before replacing a battery, turn off the main circuit power and wait for 15 minutes or longer until the charge lamp turns off. Then, check the voltage between P+ and N- with a voltage tester or others. Otherwise, an electric shock may occur. In addition, when confirming whether the charge lamp is off or not, always confirm it from the front of the servo amplifier.

⚠CAUTION	●The internal circuits of the servo amplifier may be damaged by static electricity. Always take the following precautions. ・Ground human body and work bench. ・Do not touch the conductive areas, such as connector pins and electrical parts, directly by hand.

POINT

●Replacing battery with the control circuit power off will erase the absolute position data.
●Before replacing batteries, check that the new battery is within battery life.

Replace the battery while only control circuit power is on. Replacing battery with the control circuit power on triggers [AL. 9F.1 Low battery]. However, the absolute position data will not be erased.

(a) Battery installation and removal procedure

1) Installation procedure

POINT
●For the servo amplifier with a battery holder on the bottom, it is not possible to wire for the earth with the battery installed. Insert the battery after executing the earth wiring of the servo amplifier.

a) For the servo amplifier with a battery holder on the bottom

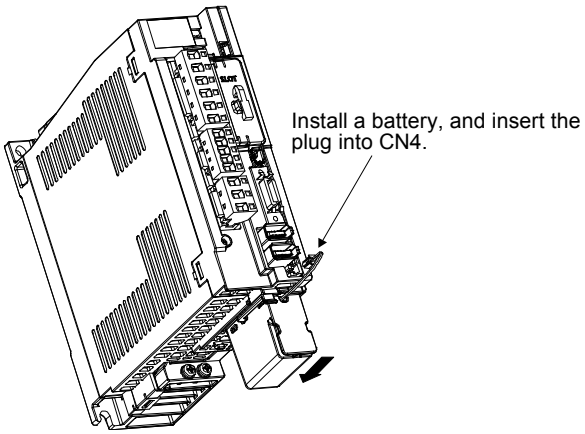

b) For the servo amplifier with a battery holder on the front

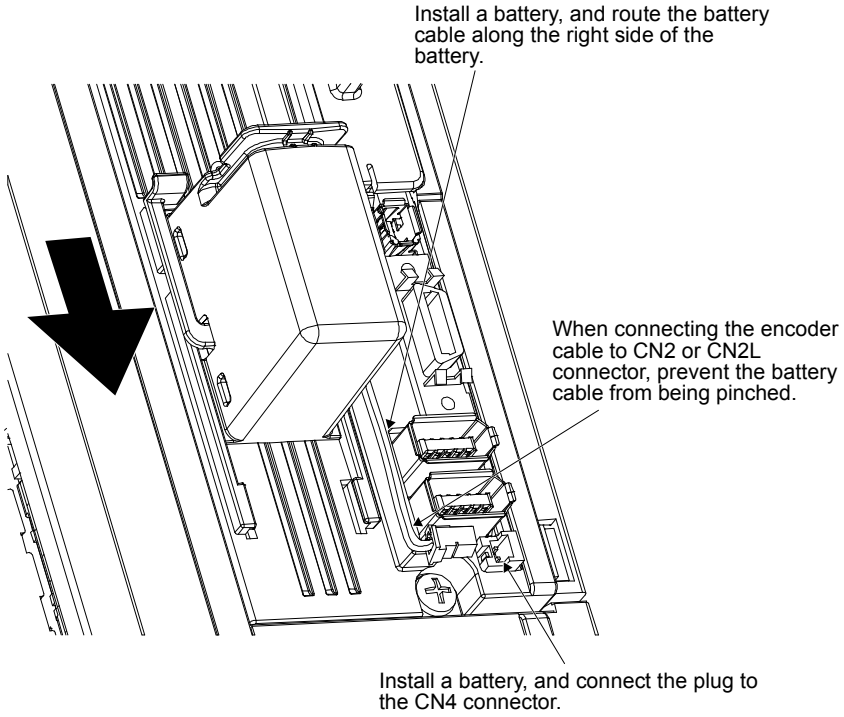

2) Removal procedure

⚠CAUTION	●Pulling out the connector of the battery without the lock release lever pressed may damage the CN4 connector of the servo amplifier or the connector of the battery.

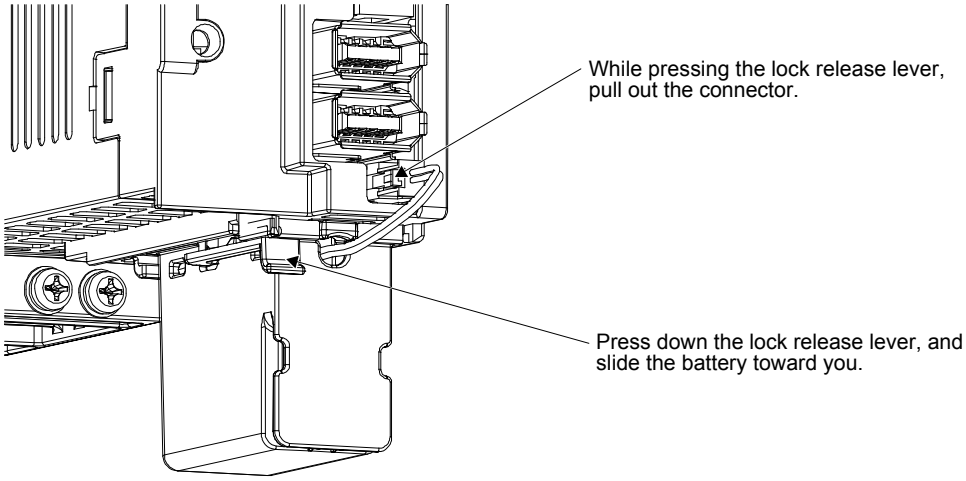

(4) Replacement procedure of the built-in battery

When the MR-BAT6V1SET-A reaches the end of its life, replace the built-in MR-BAT6V1 battery.

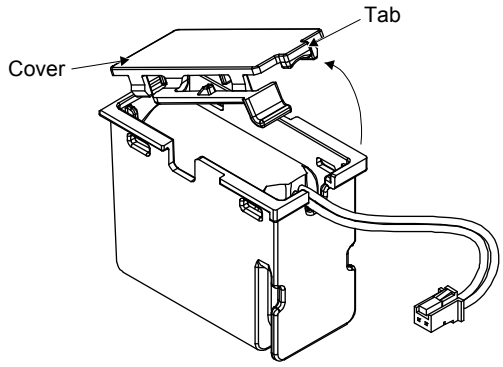

1) While pressing the locking part, open the cover.

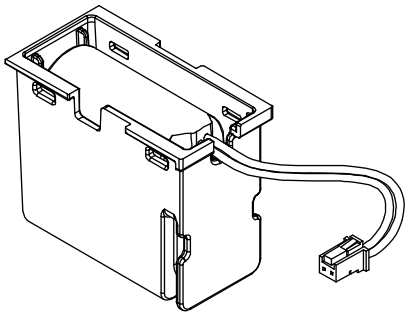

2) Replace the battery with a new MR-BAT6V1 battery.

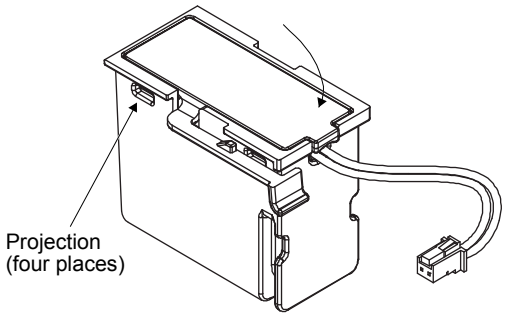

3) Press the cover until it is fixed with the projection of the locking part to close the cover.

11.8.3 MR-BAT6V1BJ battery for junction battery cable

POINT

- MR-BAT6V1BJ is compatible only with HG series servo motors. It cannot be used with direct drive motors.
- MR-BAT6V1BJ cannot be used for fully closed loop system and scale measurement function.
- When MR-BAT6V1BJ is mounted on the MR-J4-500TM, the front cover does not open. For this reason, carry out wiring to the terminal block before mounting MR-BAT6V1BJ.
- For using the MR-J4-350TM, contact your local sales office.

(1) Parts identification and dimensions

[Unit: mm]

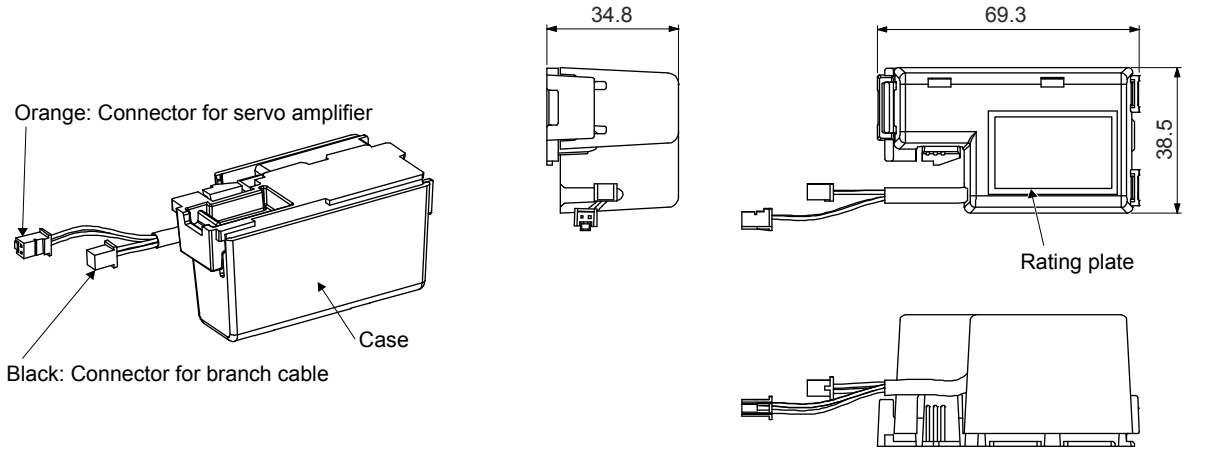

Mass: 66 [g]

(2) Year and month of manufacture of battery

Production year and month are indicated in a serial number (SERIAL) on the rating plate. The second digit from left in the number indicates the first digit of the year, the third digit from left indicates a month (Oct.: X, Nov.: Y, Dec.: Z). For November 2013, the serial is like, "SERIAL: _ 3Y _ _ _ _ _ _".

(3) Specification list

Item	Description
Battery pack	2CR17335A (CR17335A × 2 pcs. in series)
Nominal voltage [V]	6
Nominal capacity [mAh]	1650
Storage temperature [°C]	0 to 55
Operating temperature [°C]	0 to 55
Lithium content [g]	1.2
Mercury content	Less than 1 ppm
Dangerous goods class	Not subject to the dangerous goods (Class 9) Refer to app. 2 for details.
Operating humidity and storage humidity	5 %RH to 90 %RH (non-condensing)
(Note) Battery life	5 years from date of manufacture
Mass [g]	66

Note. Quality of the batteries degrades by the storage condition. The battery life is 5 years from the production date regardless of the connection status.

(4) Battery mounting

Connect the MR-BAT6V1BJ using the MR-BT6VCBL03M junction battery cable as follows.

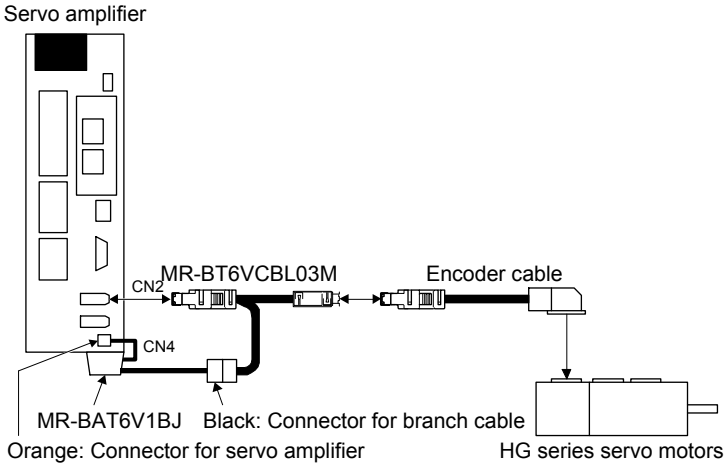

(5) Transporting a servo motor and machine apart

POINT

●Be sure to connect the connector for branch cable connection (black) when transporting a servo motor and machine apart. When the connector for branch cable connection (black) is not connected to the MR-BT6VCBL03M junction battery cable, no alarm will occur. However, the absolute position data will be erased when you transport a servo motor and machine apart.

When you transport a servo motor and machine apart, disconnect only CN2 and CN4 of the servo amplifier. When other connectors or cables are disconnected between the servo motor and battery, the absolute position data will be deleted.

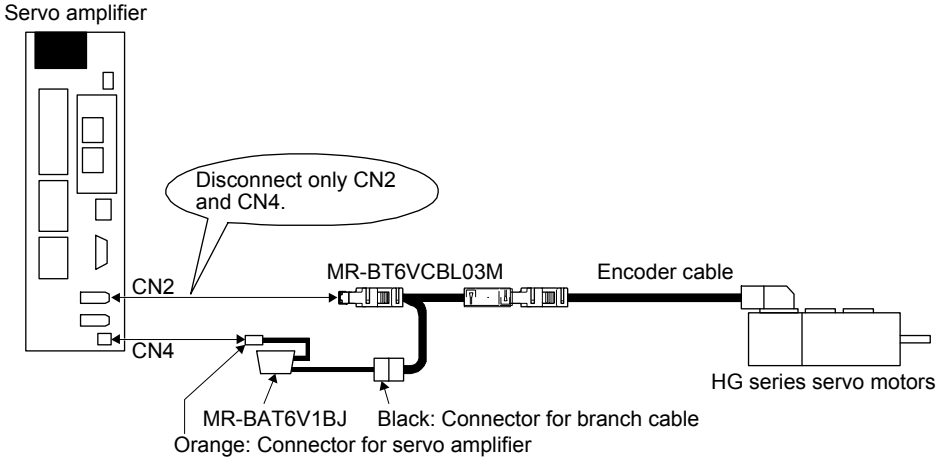

(6) Battery replacement procedure

⚠WARNING	●Before replacing a battery, turn off the main circuit power and wait for 15 minutes or longer until the charge lamp turns off. Then, check the voltage between P+ and N- with a voltage tester or others. Otherwise, an electric shock may occur. In addition, when confirming whether the charge lamp is off or not, always confirm it from the front of the servo amplifier.

⚠CAUTION	●The internal circuits of the servo amplifier may be damaged by static electricity. Always take the following precautions. ・Ground human body and work bench. ・Do not touch the conductive areas, such as connector pins and electrical parts, directly by hand. ●The battery built in MR-BAT6V1BJ cannot be replaced. Do not disassemble the MR-BAT6V1BJ. Otherwise, it may cause a malfunction.

POINT

●To replace the MR-BAT6V1BJ, follow the procedures given in this section to avoid erasing absolute position data.
●Before replacing batteries, check that the new battery is within battery life.

For MR-BAT6V1BJ, the battery can be replaced with the control circuit power supply off.

(a) Battery installation and removal procedure
The battery installation and removal procedure to the servo amplifier are the same as for the MR-BAT6V1SET battery. Refer to (3) of section 11.8.2.

(b) Preparation for replacing MR-BAT6V1BJ
Prepare a new MR-BAT6V1BJ as follows.

Model	Number and use	Remark
MR-BAT6V1BJ	1 for replacement	Battery within two years from the production date.

(c) Procedures of replacing MR-BAT6V1BJ
Replace the product as follows regardless of on/off of the control circuit power supply. When it is replaced with other procedures, the absolute position data will be erased.

1) Remove the connector for branch cable connection (black) of the old MR-BAT6V1BJ.

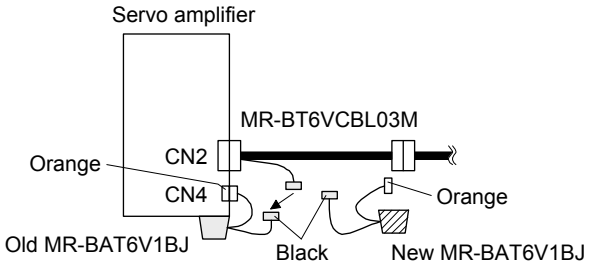

2) Connect the connector for branch cable connection (black) of the new MR-BAT6V1BJ.

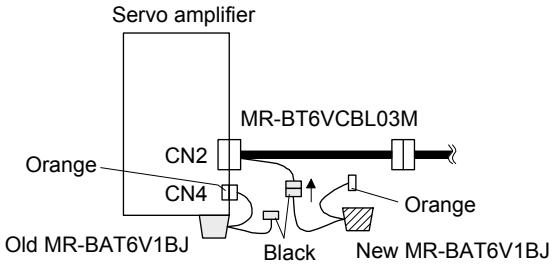

3) Remove the connector for servo amplifier (orange) of the old MR-BAT6V1BJ. When the control circuit power supply is on, performing 3) without [AL. 9F.1 Low battery] will trigger [AL. 9F.1].

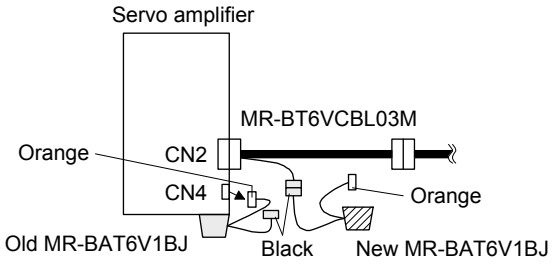

4) Remove the old MR-BAT6V1BJ from servo amplifier and mount the new MR-BAT6V1BJ. When the control circuit power supply is on, [AL. 9F.1] will occur after 3).

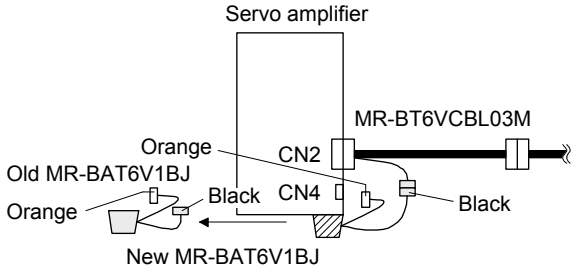

5) Mount the connector for servo amplifier (orange) of the new MR-BAT6V1BJ. When the control circuit power supply is on, [AL. 9F.1] will be canceled.

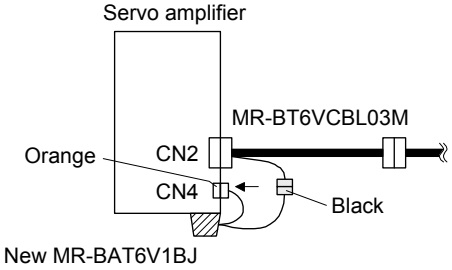

11.8.4 MR-BT6VCASE battery case

POINT
●The battery unit consists of an MR-BT6VCASE battery case and five MR-BAT6V1 batteries. ●For the specifications and year and month of manufacture of MR-BAT6V1 battery, refer to section 11.8.5.

MR-BT6VCASE is a case used for connecting and mounting five MR-BAT6V1 batteries. A battery case does not have any batteries. Please prepare MR-BAT6V1 batteries separately.

(1) The number of connected servo motors

One MR-BT6VCASE holds absolute position data up to eight axes servo motors. For direct drive motors, up to four axes can be connected. Servo motors and direct drive motors in the incremental system are included as the axis Nos. Linear servo motors are not counted as the axis Nos. Refer to the following table for the number of connectable axes of each servo motor.

Servo motor	Number of axes								
Rotary servo motor	0	1	2	3	4	5	6	7	8
Direct drive motor	4	4	4	4	4	3	2	1	0

(2) Dimensions

[Unit: mm]

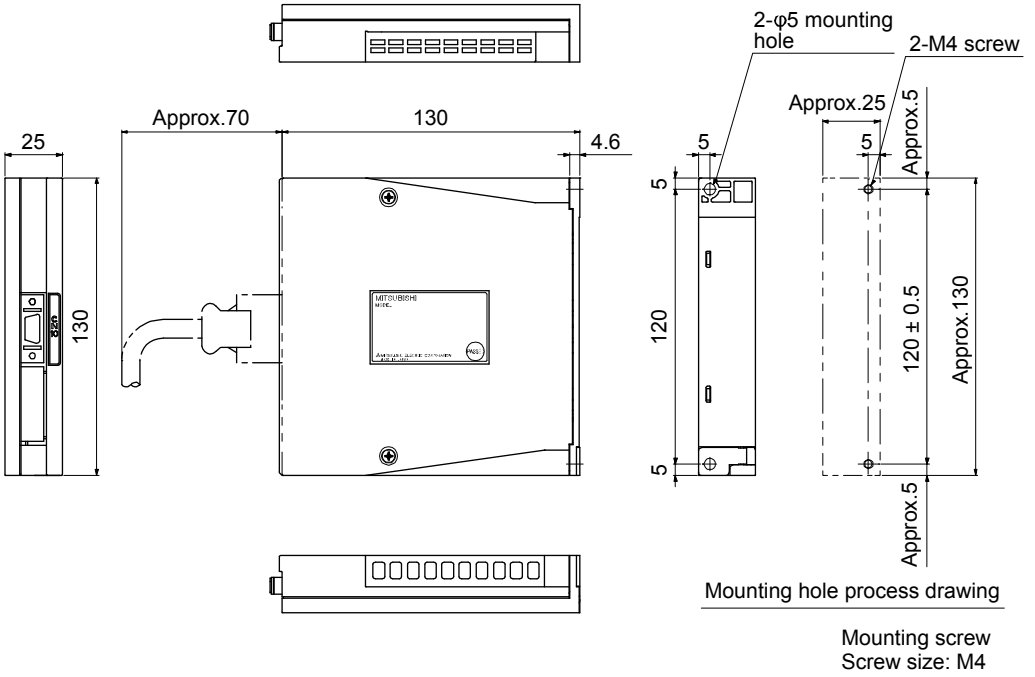

[Mass: 0.18 kg]

(3) Battery mounting

POINT

●One battery unit can be connected to up to 8-axis servo motors. However, when using direct drive motors, the number of axes of the direct drive motors should be up to 4 axes. Servo motors and direct drive motors in the incremental system are included as the axis Nos. Linear servo motors are not counted as the axis Nos.

(a) When using 1-axis servo amplifier

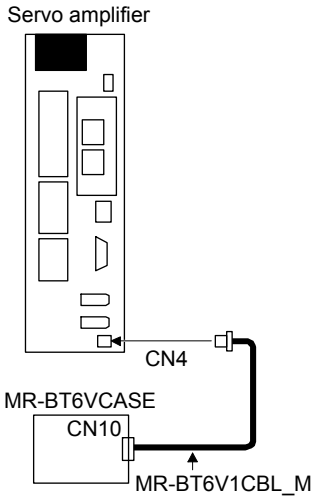

(b) When using up to 8-axis servo amplifiers

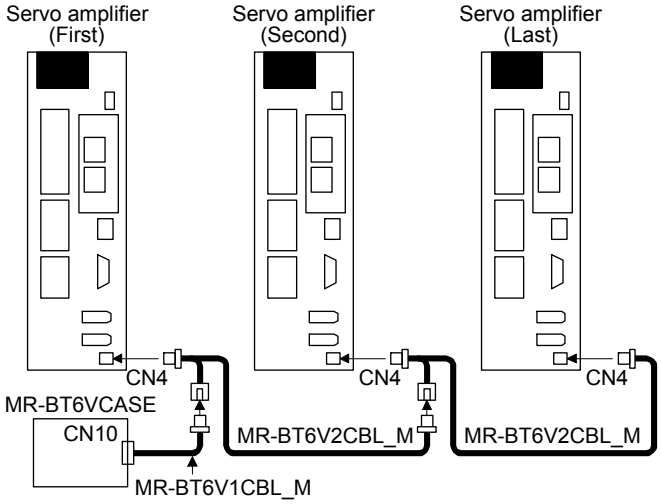

(4) Battery replacement procedure

⚠WARNING	●Before replacing a battery, turn off the main circuit power and wait for 15 minutes or longer until the charge lamp turns off. Then, check the voltage between P+ and N- with a voltage tester or others. Otherwise, an electric shock may occur. In addition, when confirming whether the charge lamp is off or not, always confirm it from the front of the servo amplifier.

⚠CAUTION	●The internal circuits of the servo amplifier may be damaged by static electricity. Always take the following precautions. ・Ground human body and work bench. ・Do not touch the conductive areas, such as connector pins and electrical parts, directly by hand.

POINT

●Replacing battery with the control circuit power off will erase the absolute position data.

●Before replacing batteries, check that the new battery is within battery life.

Replace the battery while only control circuit power is on. Replacing battery with the control circuit power on triggers [AL. 9F.1 Low battery]. However, the absolute position data will not be erased.

(a) Assembling a battery unit

⚠CAUTION
- Do not mount new and old batteries together.
- When you replace a battery, replace all batteries at the same time.

POINT
- Always install five MR-BAT6V1 batteries to an MR-BT6VCASE battery case.

1) Required items

Product name	Model	Quantity	Remark
Battery case	MR-BT6VCASE	1	MR-BT6VCASE is a case used for connecting and mounting five MR-BAT6V1 batteries.
Battery	MR-BAT6V1	5	Lithium battery (primary battery, nominal + 6 V)

2) Disassembly and assembly of the battery case MR-BT6VCASE

a) Disassembly of the case

MR-BT6VCASE is shipped assembled. To mount MR-BAT6V1 batteries, the case needs to be disassembled.

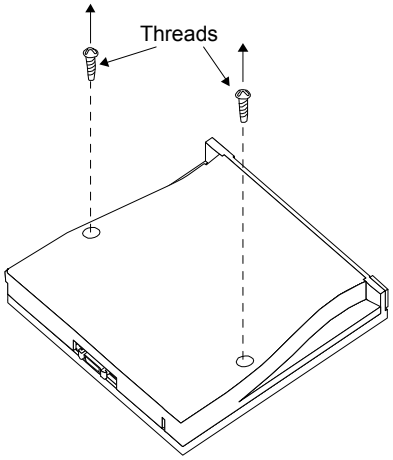

Remove the two screws using a Phillips screwdriver.

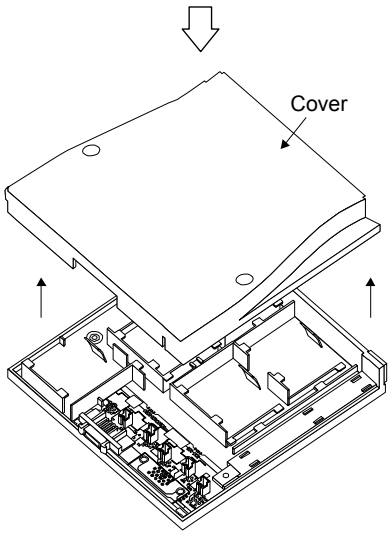

Remove the cover.

Parts identification

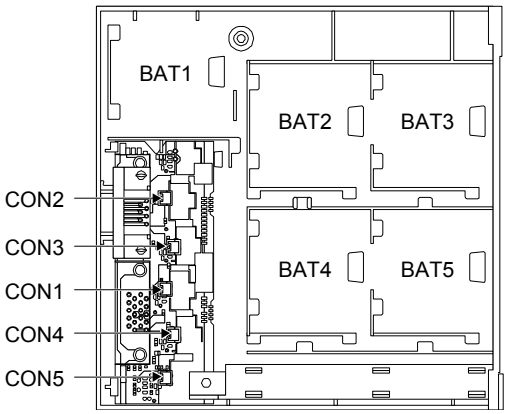

b) Mounting MR-BAT6V1

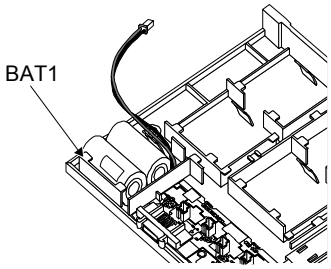

Securely mount a MR-BAT6V1 to the BAT1 holder.

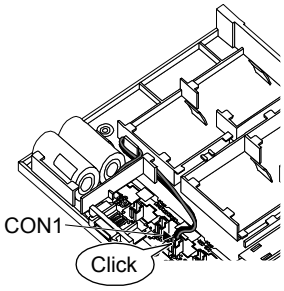

Insert the MR-BAT6V1 connector mounted on BAT1 holder to CON1.
Confirm the click sound at this point.
The connector has to be connected in the right direction.
If the connector is pushed forcefully in the incorrect direction, the connector will break.
Place the MR-BAT6V1 lead wire to the duct designed to store lead wires.
Insert MR-BAT6V1 to the holder in the same procedure in the order from BAT2 to BAT5.

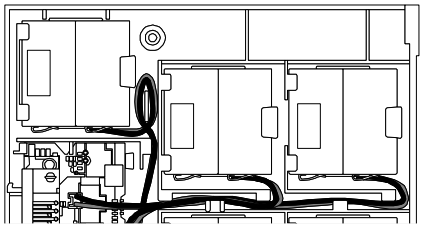

Bring out the lead wire from the space between the ribs, and bend it as shown above to store it in the duct. Connect the lead wire to the connector. Be careful not to get the lead wire caught in the case or other parts.
When the lead wire is damaged, external short circuit may occur, and the battery can become hot.

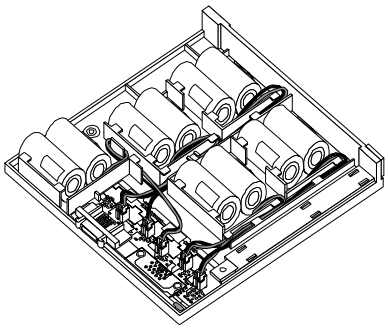

c) Assembly of the case
After all MR-BAT6V1 batteries are mounted, fit the cover and insert screws into the two holes and tighten them. Tightening torque is 0.71 N•m.

POINT
●When assembling the case, be careful not to get the lead wires caught in the fitting parts or the screwing parts.

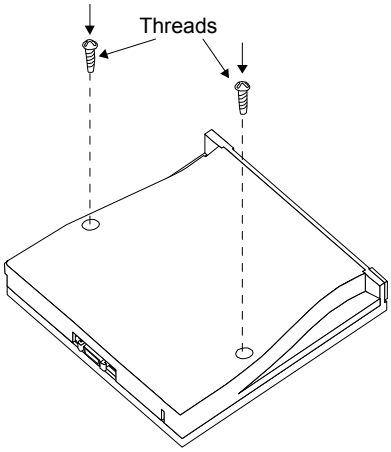

d) Precautions for removal of battery
The connector attached to the MR-BAT6V1 battery has the lock release lever. When removing the connector, pull out the connector while pressing the lock release lever.

3) Battery cable removal

⚠CAUTION	●Pulling out the connector of the MR-BT6V1CBL and the MR-BT6V2CBL without the lock release lever pressed may damage the CN4 connector of the servo amplifier or the connector of the MR-BT6V1CBL or MR-BT6V2CBL.

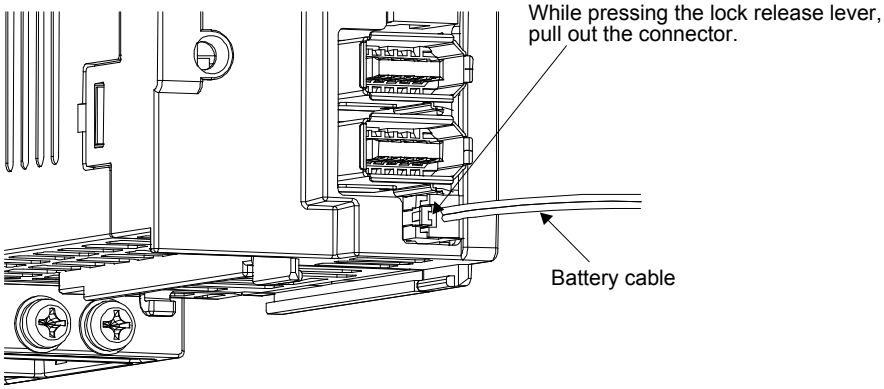

11.8.5 MR-BAT6V1 battery

The MR-BAT6V1 primary lithium battery is a battery for replacing MR-BAT6V1SET-A and a battery built-in MR-BT6VCASE. Store the MR-BAT6V1 in the case to use.
The year and month of manufacture of MR-BAT6V1 battery have been described to the rating plate put on a MR-BAT6V1 battery.

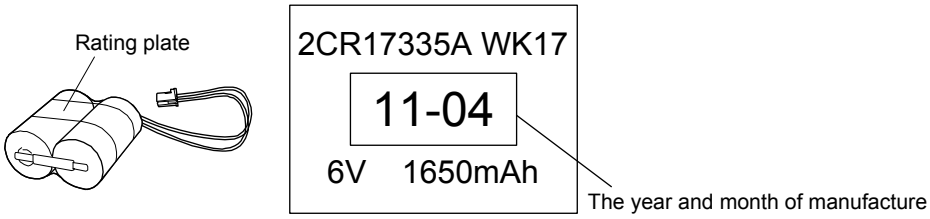

Item	Description
Battery pack	2CR17335A (CR17335A × 2 pcs. in series)
Nominal voltage [V]	6
Nominal capacity [mAh]	1650
Storage temperature [°C]	0 to 55
Operating temperature [°C]	0 to 55
Lithium content [g]	1.2
Mercury content	Less than 1 ppm
Dangerous goods class	Not subject to the dangerous goods (Class 9) Refer to app. 2 for details.
Operating humidity and storage humidity	5 %RH to 90 %RH (non-condensing)
(Note) Battery life	5 years from date of manufacture
Mass [g]	34

Note. Quality of the batteries degrades by the storage condition. The battery life is 5 years from the production date regardless of the connection status.

11.9 Selection example of wires

POINT

- To comply with the IEC/EN/UL/CSA standard, use the wires shown in app. 4 for wiring. To comply with other standards, use a wire that is complied with each standard.
- For the selection example when the servo amplifier is used with the DC power supply input, refer to app. 1.3.
- Selection conditions of wire size are as follows.
  Construction condition: Single wire set in midair
  Wire length: 30 m or less

The following diagram shows the wires used for wiring. Use the wires given in this section or equivalent.

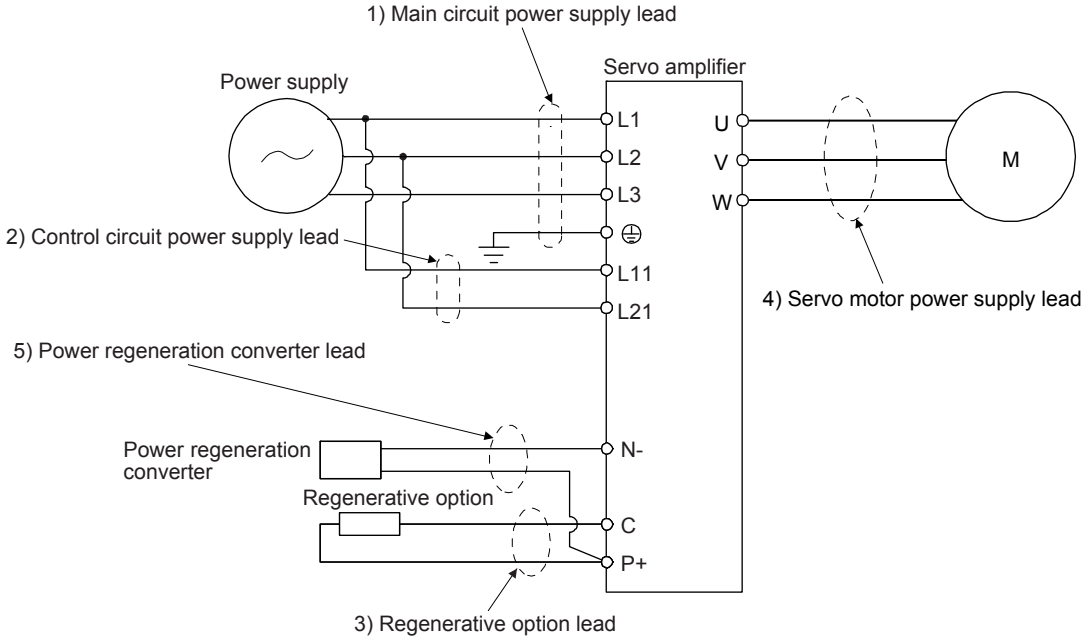

(1) Example of selecting the wire sizes

Use the 600 V Grade heat-resistant polyvinyl chloride insulated wire (HIV wire) for wiring. The following shows the wire size selection example.

(a) 200 V class

Table 11.1 Wire size selection example (HIV wire)

<table>
<tr><th rowspan="2">Servo amplifier</th><th colspan="4">Wire [mm^2] (Note 1)</th></tr>
<tr><th>1) L1/L2/L3/⏚</th><th>2) L11/L21</th><th>3) P+/C</th><th>4) U/V/W/⏚
(Note 3)</th></tr>
<tr><td>MR-J4-10TM</td><td rowspan="7">2 (AWG 14)</td><td rowspan="8">1.25 to 2
(AWG 16 to 14)
(Note 4)</td><td rowspan="8">2 (AWG 14)</td><td rowspan="6">AWG 18 to 14
(Note 4)</td></tr>
<tr><td>MR-J4-20TM</td></tr>
<tr><td>MR-J4-40TM</td></tr>
<tr><td>MR-J4-60TM</td></tr>
<tr><td>MR-J4-70TM</td></tr>
<tr><td>MR-J4-100TM</td></tr>
<tr><td>MR-J4-200TM
(3-phase power supply input)</td><td rowspan="3">AWG 16 to 10</td></tr>
<tr><td>MR-J4-200TM
(1-phase power supply input)</td><td rowspan="2">3.5 (AWG 12)</td></tr>
<tr><td>MR-J4-350TM</td></tr>
<tr><td>MR-J4-500TM
(Note 2)</td><td>5.5 (AWG 10): a</td><td rowspan="2">1.25 (AWG 16): a
2 (AWG 14): d
(Note 4)</td><td rowspan="2">2 (AWG 14): c</td><td>2 (AWG 14): c
3.5 (AWG 12): a
5.5 (AWG 10): a</td></tr>
<tr><td>MR-J4-700TM
(Note 2)</td><td>8 (AWG 8): b</td><td>2 (AWG 14): c
3.5 (AWG 12): a
5.5 (AWG 10): a
8 (AWG 8): b</td></tr>
<tr><td>MR-J4-11KTM
(Note 2)</td><td>14 (AWG 6): f</td><td rowspan="3">1.25 (AWG 16): c
2 (AWG 14): c
(Note 4)</td><td>3.5 (AWG 12): g</td><td>14 (AWG 6): f
5.5 (AWG 10): g
(Note 5)
8 (AWG 8): k</td></tr>
<tr><td>MR-J4-15KTM
(Note 2)</td><td>22 (AWG 4): h</td><td>5.5 (AWG 10): g</td><td>22 (AWG 4): h
8 (AWG 8): k (Note 5)</td></tr>
<tr><td>MR-J4-22KTM
(Note 2)</td><td>38 (AWG 2): i</td><td>5.5 (AWG 10): j</td><td>38 (AWG 2): i</td></tr>
</table>

Note 1. Alphabets in the table indicate crimping tools. For crimp terminals and applicable tools, refer to (2) in this section.
2. To connect these models to a terminal block, be sure to use the screws that come with the terminal block.
3. The wire size shows applicable size of the servo amplifier connector and terminal block. For wires connecting to the servo motor, refer to each servo motor instruction manual.
4. Be sure to use the size of 2 mm^2 when corresponding to IEC/EN/UL/CSA standard.
5. This is for connecting to the linear servo motor with natural cooling method.

Use wires (5)) of the following sizes with the power regeneration converter (FR-RC).

Model	Wire [mm^2]
FR-RC-15K	14 (AWG 6)
FR-RC-30K	14 (AWG 6)
FR-RC-55K	22 (AWG 4)

(b) 400 V class

Table 11.2 Wire size selection example (HIV wire)

<table>
<tr><th rowspan="2">Servo amplifier</th><th colspan="4">Wires [mm²] (Note 1)</th></tr>
<tr><th>1) L1/L2/L3/⏚</th><th>2) L11/L21</th><th>3) P+/C</th><th>4) U/V/W/⏚
(Note 3)</th></tr>
<tr><td>MR-J4-60TM4/
MR-J4-100TM4</td><td rowspan="3">2 (AWG 14)</td><td rowspan="3">1.25 to 2
(AWG 16 to 14)
(Note 4)</td><td rowspan="3">2 (AWG 14)</td><td rowspan="3">AWG 16 to 14</td></tr>
<tr><td>MR-J4-200TM4</td></tr>
<tr><td>MR-J4-350TM4</td></tr>
<tr><td>MR-J4-500TM4
(Note 2)</td><td>2 (AWG 14): b</td><td rowspan="2">1.25 (AWG 16): a
2 (AWG 14): c
(Note 4)</td><td rowspan="2">2 (AWG 14): b</td><td>3.5 (AWG 12): a</td></tr>
<tr><td>MR-J4-700TM4
(Note 2)</td><td>3.5 (AWG 12): a</td><td>5.5 (AWG 10): a</td></tr>
<tr><td>MR-J4-11KTM4
(Note 2)</td><td>5.5 (AWG 10): d</td><td rowspan="3">1.25 (AWG 16): b
2 (AWG 14): b
(Note 4)</td><td>2 (AWG 14): f</td><td rowspan="2">8 (AWG 8): g</td></tr>
<tr><td>MR-J4-15KTM4
(Note 2)</td><td>8 (AWG 8): g</td><td>3.5 (AWG 12): d</td></tr>
<tr><td>MR-J4-22KTM4
(Note 2)</td><td>14 (AWG 6): i</td><td>3.5 (AWG 12): e</td><td>5.5 (AWG 10): e
(Note 5)
8 (AWG 8): h
(Note 6)
14 (AWG 6): i</td></tr>
</table>

Note 1. Alphabets in the table indicate crimping tools. For crimp terminals and applicable tools, refer to (2) in this section.
2. To connect these models to a terminal block, be sure to use the screws that come with the terminal block.
3. The wire size shows applicable size of the servo amplifier connector and terminal block. For wires connecting to the servo motor, refer to each servo motor instruction manual.
4. Be sure to use the size of 2 mm² when corresponding to IEC/EN/UL/CSA standard.
5. This is for connecting to the linear servo motor with natural cooling method.
6. This is for connecting to the linear servo motor with liquid cooling method.

Use wires (5)) of the following sizes with the power regeneration converter (FR-RC-H).

Model	Wire [mm²]
FR-RC-H15K	14 (AWG 6)
FR-RC-H30K	
FR-RC-H55K	

(c) 100 V class

Table 11.3 Wire size selection example (HIV wire)

<table>
<tr><th rowspan="2">Servo amplifier</th><th colspan="4">Wires [mm²]</th></tr>
<tr><th>1) L1/L2/⏚</th><th>2) L11/L21</th><th>3) P+/C</th><th>4) U/V/W/⏚
(Note 1)</th></tr>
<tr><td>MR-J4-10TM1</td><td rowspan="3">2 (AWG 14)</td><td rowspan="3">1.25 to 2
(AWG 16 to 14)
(Note 2)</td><td rowspan="3">2 (AWG 14)</td><td rowspan="3">AWG 18 to 14
(Note 2)</td></tr>
<tr><td>MR-J4-20TM1</td></tr>
<tr><td>MR-J4-40TM1</td></tr>
</table>

Note 1. The wire size shows applicable size of the servo amplifier connector and terminal block. For wires connecting to the servo motor, refer to each servo motor instruction manual.
2. Be sure to use the size of 2 mm² when corresponding to IEC/EN/UL/CSA standard.

(2) Selection example of crimp terminals

(a) 200 V class

Symbol	Servo amplifier-side crimp terminals				
	(Note 2) Crimp terminal	Applicable tool			Manufacturer
		Body	Head	Dice	
a	FVD5.5-4	YNT-1210S			JST
b (Note 1)	8-4NS	YHT-8S			
c	FVD2-4	YNT-1614			
d	FVD2-M3				
e	FVD1.25-M3	YNT-2216			
f	FVD14-6	YF-1	YNE-38	DH-122 DH-112	
g	FVD5.5-6	YNT-1210S			
h	FVD22-6	YF-1	YNE-38	DH-123 DH-113	
i	FVD38-8	YF-1	YNE-38	DH-124 DH-114	
j	FVD5.5-8	YNT-1210S			
k	FVD8-6	YF-1/E-4	YNE-38	DH-121 DH-111	

Note 1. Coat the crimping part with an insulation tube.
2. Some crimp terminals may not be mounted depending on the size. Make sure to use the recommended ones or equivalent ones.

(b) 400 V class

Symbol	Servo amplifier-side crimp terminals				Manufacturer
	Crimp terminal (Note)	Applicable tool			
		Body	Head	Dice	
a	FVD5.5-4	YNT-1210S			JST
b	FVD2-4	YNT-1614			
c	FVD2-M3				
d	FVD5.5-6	YNT-1210S			
e	FVD5.5-8	YNT-1210S			
f	FVD2-6	YNT-1614			
g	FVD8-6	YF-1	YNE-38	DH-121/DH-111	
h	FVD8-8				
i	FVD14-8			DH-122/DH-112	

Note. Some crimp terminals may not be mounted depending on the size. Make sure to use the recommended ones or equivalent ones.

11.10 Molded-case circuit breakers, fuses, magnetic contactors

⚠CAUTION

- To prevent the servo amplifier from smoke and a fire, select a molded-case circuit breaker which shuts off with high speed.
- Always use one molded-case circuit breaker and one magnetic contactor with one servo amplifier.

POINT

- For the selection when the servo amplifier is used with the DC power supply input, refer to app. 1.4.

(1) For main circuit power supply

When using a fuse instead of the molded-case circuit breaker, use the one having the specifications given in this section.

Servo amplifier	Molded-case circuit breaker (Note 1, 4)			Fuse			Magnetic contactor (Note 2)
	Frame, rated current		Voltage AC [V]	Class	Current [A]	Voltage AC [V]	
	Power factor improving reactor is not used	Power factor improving reactor is used					
MR-J4-10TM	30 A frame 5 A	30 A frame 5 A	240	T	10	300	S-N10 S-T10
MR-J4-20TM	30 A frame 5 A	30 A frame 5 A					
MR-J4-40TM	30 A frame 10 A	30 A frame 5 A			15		
MR-J4-60TM	30 A frame 15 A	30 A frame 10 A			20		
MR-J4-70TM	30 A frame 15 A	30 A frame 10 A					
MR-J4-100TM (3-phase power supply input)	30 A frame 15 A	30 A frame 10 A					
MR-J4-100TM (1-phase power supply input)	30 A frame 15 A	30 A frame 15 A			30		
MR-J4-200TM	30 A frame 20 A	30 A frame 20 A			40		S-N20 (Note 3) S-T21
MR-J4-350TM	30 A frame 30 A	30 A frame 30 A			70		S-N20 S-T21
MR-J4-500TM	50 A frame 50 A	50 A frame 50 A			125		S-N35 S-T35
MR-J4-700TM	100 A frame 75 A	60 A frame 60 A			150		S-N50 S-T50
MR-J4-11KTM	100 A frame 100 A	100 A frame 100 A			200		
MR-J4-15KTM	125 A frame 125 A	125 A frame 125 A			250		S-N65 S-T65
MR-J4-22KTM	225 A frame 175 A	225 A frame 175 A			350		S-N95 S-T100
MR-J4-60TM4	30 A frame 5 A	30 A frame 5 A	480	T	10	600	S-N10 S-T10
MR-J4-100TM4	30 A frame 10 A	30 A frame 5 A			15		
MR-J4-200TM4	30 A frame 15 A	30 A frame 10 A			25		
MR-J4-350TM4	30 A frame 20 A	30 A frame 15 A			35		S-N20 (Note 3) S-T21
MR-J4-500TM4	30 A frame 20 A	30 A frame 20 A			50		
MR-J4-700TM4	30 A frame 30 A	30 A frame 30 A			65		S-N20 S-T21
MR-J4-11KTM4	50 A frame 50 A	50 A frame 50 A			100		S-N25 S-T35
MR-J4-15KTM4	60 A frame 60 A	60 A frame 60 A			150		S-N35 S-T35
MR-J4-22KTM4	100 A frame 100 A	100 A frame 100 A			175		S-N50 S-T50
MR-J4-10TM1	30 A frame 5 A	30 A frame 5 A	240	T	10	300	S-N10 S-T10
MR-J4-20TM1	30 A frame 10 A	30 A frame 10 A			15		
MR-J4-40TM1	30 A frame 15 A	30 A frame 10 A			20		

Note 1. When having the servo amplifier comply with the IEC/EN/UL/CSA standard, refer to app. 4.
2. Use a magnetic contactor with an operation delay time (interval between current being applied to the coil until closure of contacts) of 80 ms or less.
3. S-N18 can be used when auxiliary contact is not required.
4. Use a molded-case circuit breaker which has the same or higher operation characteristics than our lineup.

The Type E Combination motor controller can also be used instead of a molded-case circuit breaker.

Servo amplifier	Rated input voltage AC [V]	Input phase (Note 2)	Type E Combination motor controller			SCCR [kA] (Note 1)
			Model	Rated voltage AC [V]	Rated current [A] (heater design)	
MR-J4-10TM	200 to 240	3-phase	MMP-T32	240	1.6	50
MR-J4-20TM					2.5	
MR-J4-40TM					4	
MR-J4-60TM					6.3	
MR-J4-70TM					6.3	
MR-J4-100TM					8	
MR-J4-200TM					18	
MR-J4-350TM					25	25
MR-J4-500TM					32	
MR-J4-60TM4	380 to 480	3-phase		480Y/277	2.5	50
MR-J4-100TM4					4	
MR-J4-200TM4					8	
MR-J4-350TM4					13	
MR-J4-500TM4					18	
MR-J4-700TM4					25	25

Note 1. The values of the SCCR vary depending on the combination with the servo amplifier.
2. 1-phase input is not supported.

(2) For control circuit power supply

When the wiring for the control circuit power supply (L11/L21) is thinner than that for the main circuit power supply (L1/L2/L3), install an overcurrent protection device (molded-case circuit breaker or fuse) to protect the branch circuit.

Servo amplifier	Molded-case circuit breaker (Note)		Fuse (Class T)		Fuse (Class K5)	
	Frame, rated current	Voltage AC [V]	Current [A]	Voltage AC [V]	Current [A]	Voltage AC [V]
MR-J4-10TM	30 A frame 5 A	240	1	300	1	250
MR-J4-20TM						
MR-J4-40TM						
MR-J4-60TM						
MR-J4-70TM						
MR-J4-100TM						
MR-J4-200TM						
MR-J4-350TM						
MR-J4-500TM						
MR-J4-700TM						
MR-J4-11KTM						
MR-J4-15KTM						
MR-J4-22KTM						
MR-J4-60TM4	30 A frame 5 A	480	1	600	1	600
MR-J4-100TM4						
MR-J4-200TM4						
MR-J4-350TM4						
MR-J4-500TM4						
MR-J4-700TM4						
MR-J4-11KTM4						
MR-J4-15KTM4						
MR-J4-22KTM4						
MR-J4-10TM1	30 A frame 5 A	240	1	300	1	250
MR-J4-20TM1						
MR-J4-40TM1						

Note. When having the servo amplifier comply with the IEC/EN/UL/CSA standard, refer to app. 4.

11.11 Power factor improving DC reactors

The following shows the advantages of using power factor improving DC reactor.

- It improves the power factor by increasing the form factor of the servo amplifier's input current.
- It decreases the power supply capacity.
- The input power factor is improved to about 85%.
- As compared to the power factor improving AC reactor (FR-HAL-(H)), it decreases the loss.

When connecting the power factor improving DC reactor to the servo amplifier, always disconnect P3 and P4. If it remains connected, the effect of the power factor improving DC reactor is not produced.
When used, the power factor improving DC reactor generates heat. To release heat, therefore, leave a 10 cm or more clearance at each of the top and bottom, and a 5 cm or more clearance on each side.

(1) 200 V class

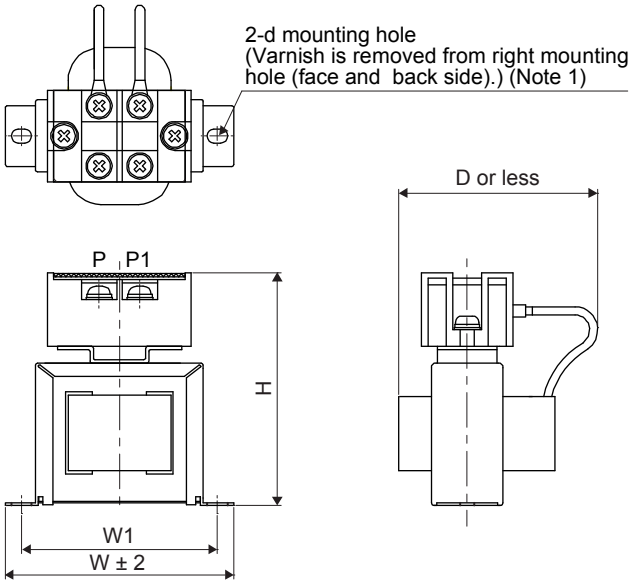

Fig. 11.1

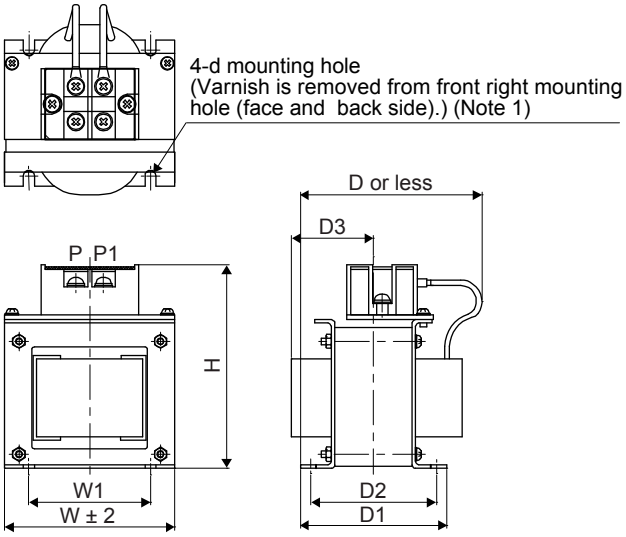

Fig. 11.2

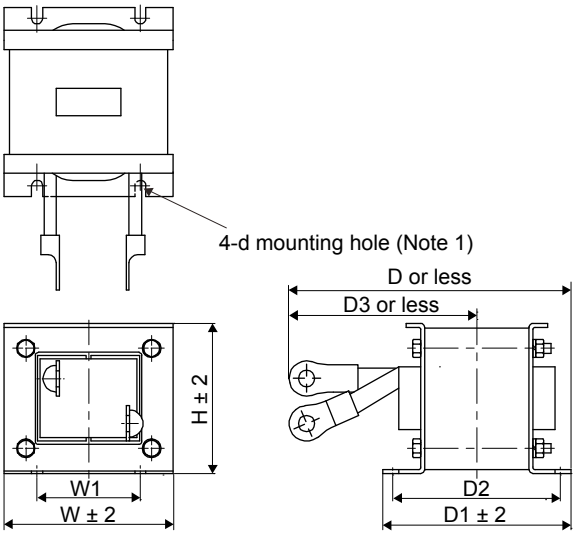

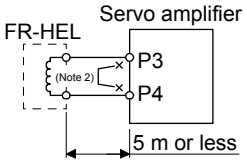

Fig. 11.3

Note 1. Use this for grounding.
2. When using the power factor improving DC reactor, remove the short bar across P3 and P4.

Servo amplifier	Power factor improving DC reactor	Dimensions	Dimensions [mm]								Terminal size	Mass [kg]	Wire [mm²] (Note 2)
			W	W1	H	D (Note 1)	D1	D2	D3	d			
MR-J4-10TM MR-J4-20TM	FR-HEL-0.4K	Fig. 11.1	70	60	71	61		21		M4	M4	0.4	2 (AWG 14)
MR-J4-40TM	FR-HEL-0.75K		85	74	81	61		21		M4	M4	0.5	
MR-J4-60TM MR-J4-70TM	FR-HEL-1.5K		85	74	81	70		30		M4	M4	0.8	
MR-J4-100TM	FR-HEL-2.2K		85	74	81	70		30		M4	M4	0.9	
MR-J4-200TM	FR-HEL-3.7K	Fig. 11.2	77	55	92	82	66	57	37	M4	M4	1.5	
MR-J4-350TM	FR-HEL-7.5K		86	60	113	98	81	72	43	M4	M5	2.5	3.5 (AWG 12)
MR-J4-500TM	FR-HEL-11K		105	64	133	112	92	79	47	M6	M6	3.3	5.5 (AWG 10)
MR-J4-700TM	FR-HEL-15K		105	64	133	115	97	84	48.5	M6	M6	4.1	8 (AWG 8)
MR-J4-11KTM	FR-HEL-15K		105	64	133	115	97	84	48.5	M6	M6	4.1	14 (AWG 6)
MR-J4-15KTM	FR-HEL-22K		105	64	93	175	117	104	115 (Note 1)	M6	M10	5.6	22 (AWG 4)
MR-J4-22KTM	FR-HEL-30K	Fig. 11.3	114	72	100	200	125	101	135 (Note 1)	M6	M10	7.8	38 (AWG 2)

Note 1. Maximum dimensions The dimension varies depending on the input/output lines.
2. Selection conditions of wire size are as follows.
600 V grade heat-resistant polyvinyl chloride insulated wire (HIV wire)
Construction condition: Single wire set in midair

(2) 400 V class

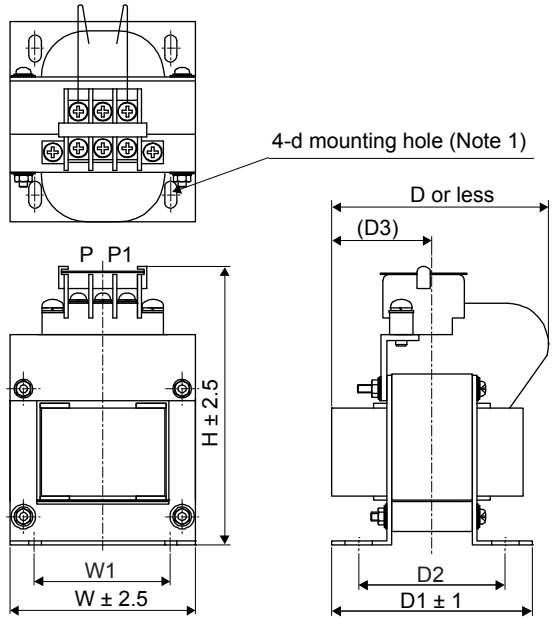

Fig. 11.4

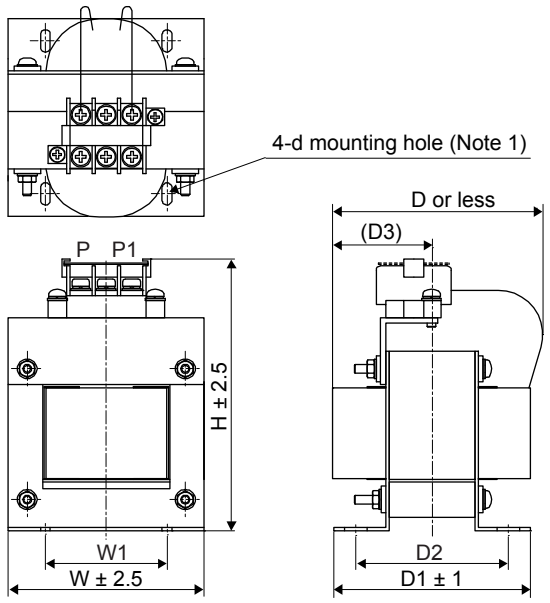

Fig. 11.5

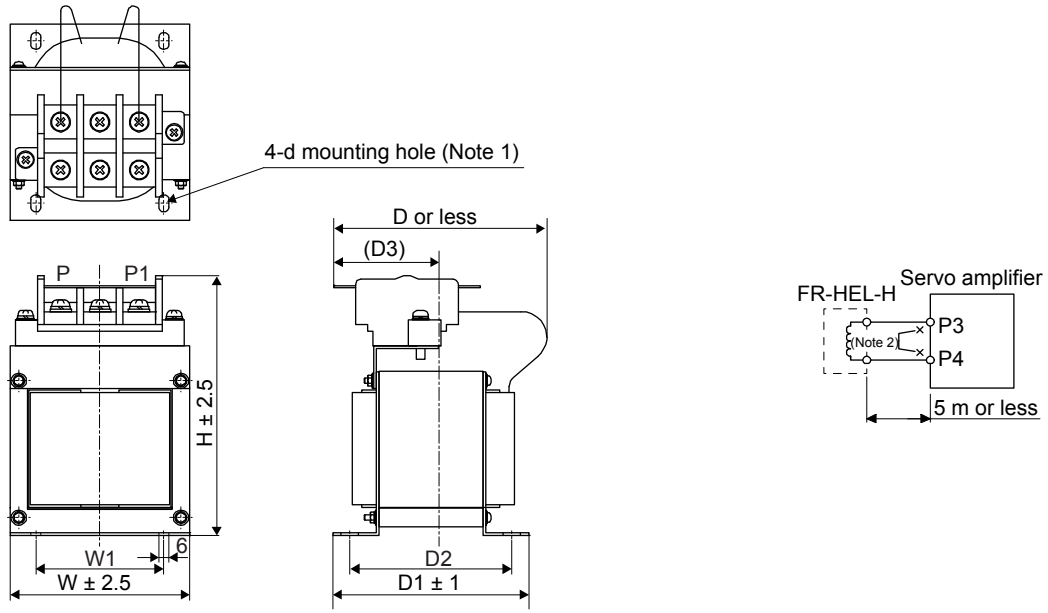

Fig. 11.6

Note 1. Use this for grounding.
2. When using the power factor improving DC reactor, remove the short bar across P3 and P4.

Servo amplifier	Power factor improving DC reactor	Dimensions	Dimensions [mm]								Terminal size	Mass [kg]	Wire [mm²] (Note)
			W	W1	H	D	D1	D2	D3	d			
MR-J4-60TM4	FR-HEL-H1.5K	Fig. 11.4	66	50	100	80	74	54	37	M4	M3.5	1.0	2 (AWG 14)
MR-J4-100TM4	FR-HEL-H2.2K		76	50	110	80	74	54	37	M4	M3.5	1.3	2 (AWG 14)
MR-J4-200TM4	FR-HEL-H3.7K	Fig. 11.5	86	55	120	95	89	69	45	M4	M4	2.3	2 (AWG 14)
MR-J4-350TM4	FR-HEL-H7.5K		96	60	128	105	100	80	50	M5	M4	3.5	2 (AWG 14)
MR-J4-500TM4	FR-HEL-H11K		105	75	137	110	105	85	53	M5	M5	4.5	3.5 (AWG 12)
MR-J4-700TM4	FR-HEL-H15K	Fig. 11.6	105	75	152	125	115	95	62	M5	M6	5.0	5.5 (AWG 10)
MR-J4-11KTM4													8 (AWG 8)
MR-J4-15KTM4	FR-HEL-H22K		133	90	178	120	95	75	53	M5	M6	6.0	8 (AWG 8)
MR-J4-22KTM4	FR-HEL-H30K		133	90	178	120	100	80	56	M5	M6	6.5	14 (AWG 6)

Note. Selection conditions of wire size are as follows.
Wire type: 600 V grade heat-resistant polyvinyl chloride insulated wire (HIV wire)
Construction condition: Single wire set in midair

11.12 Power factor improving AC reactors

The following shows the advantages of using power factor improving AC reactor.

- It improves the power factor by increasing the form factor of the servo amplifier's input current.
- It decreases the power supply capacity.
- The input power factor is improved to about 80%.

When using power factor improving reactors for two servo amplifiers or more, be sure to connect a power factor improving reactor to each servo amplifier. If using only one power factor improving reactor, enough improvement effect of phase factor cannot be obtained unless all servo amplifiers are operated.

(1) 200 V class/100 V class

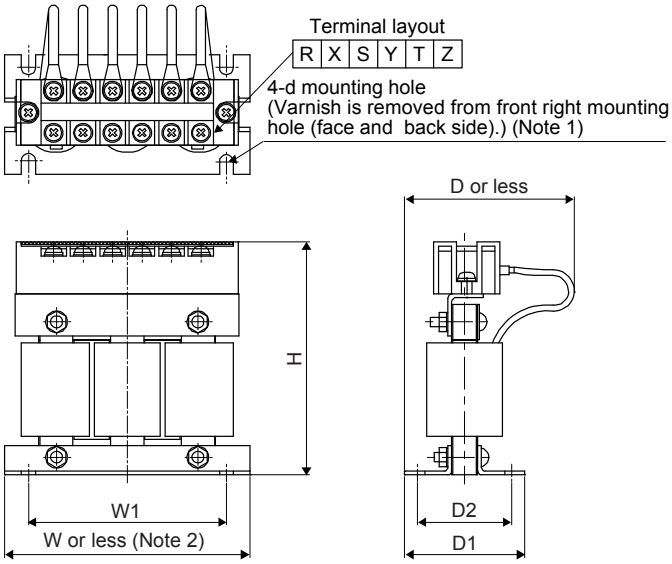

Fig. 11.7

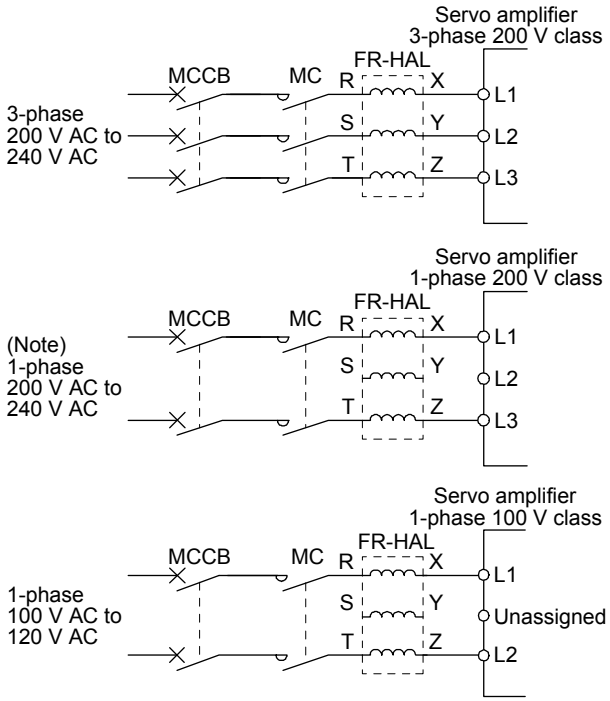

Note 1. Use this for grounding.
2. W ± 2 is applicable for FR-HAL-0.4K to FR-HAL-1.5K.

Note. For 1-phase 200 V AC to 240 V AC, connect the power supply to L1 and L3. Leave L2 open.

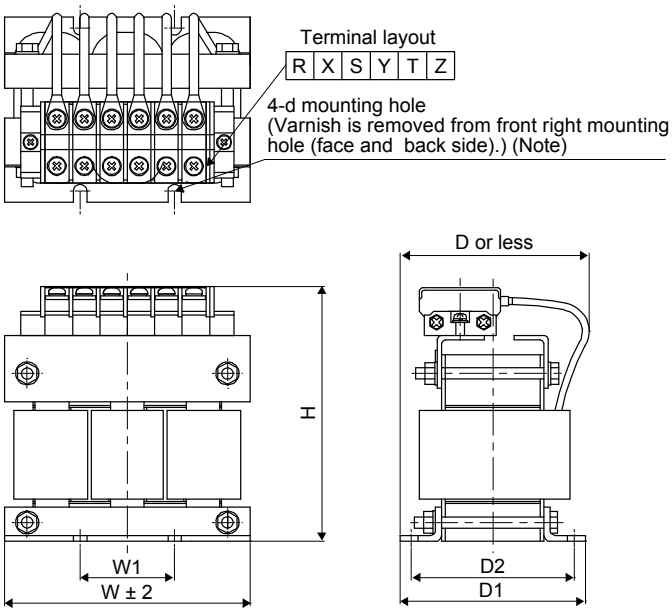

Fig. 11.8

Note. Use this for grounding.

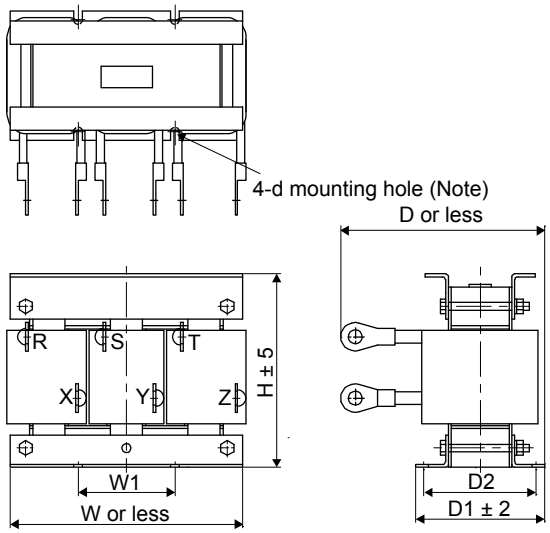

Fig. 11.9

Note. Use this for grounding.

Servo amplifier	Power factor improving AC reactor	Dimensions	Dimensions [mm]							Terminal size	Mass [kg]
			W	W1	H	D (Note)	D1	D2	d		
MR-J4-10TM MR-J4-20TM MR-J4-10TM1	FR-HAL-0.4K	Fig. 11.7	104	84	99	72	51	40	M5	M4	0.6
MR-J4-40TM MR-J4-20TM1	FR-HAL-0.75K		104	84	99	74	56	44	M5	M4	0.8
MR-J4-60TM MR-J4-70TM MR-J4-40TM1	FR-HAL-1.5K		104	84	99	77	61	50	M5	M4	1.1
MR-J4-100TM (3-phase power supply input)	FR-HAL-2.2K		115 (Note)	40	115	77	71	57	M6	M4	1.5
MR-J4-100TM (1-phase power supply input) MR-J4-200TM (3-phase power supply input)	FR-HAL-3.7K		115 (Note)	40	115	83	81	67	M6	M4	2.2
MR-J4-200TM (1-phase power supply input)	FR-HAL-5.5K		115 (Note)	40	115	83	81	67	M6	M4	2.3
MR-J4-350TM	FR-HAL-7.5K	Fig. 11.8	130	50	135	100	98	86	M6	M5	4.2
MR-J4-500TM	FR-HAL-11K		160	75	164	111	109	92	M6	M6	5.2
MR-J4-700TM	FR-HAL-15K		160	75	167	126	124	107	M6	M6	7.0
MR-J4-11KTM	FR-HAL-15K		160	75	167	126	124	107	M6	M6	7.0
MR-J4-15KTM	FR-HAL-22K		185 (Note)	75	150	158	100	87	M6	M8	9.0
MR-J4-22KTM	FR-HAL-30K	Fig. 11.9	185 (Note)	75	150	168	100	87	M6	M10	9.7

Note. Maximum dimensions The dimension varies depending on the input/output lines.

(2) 400 V class

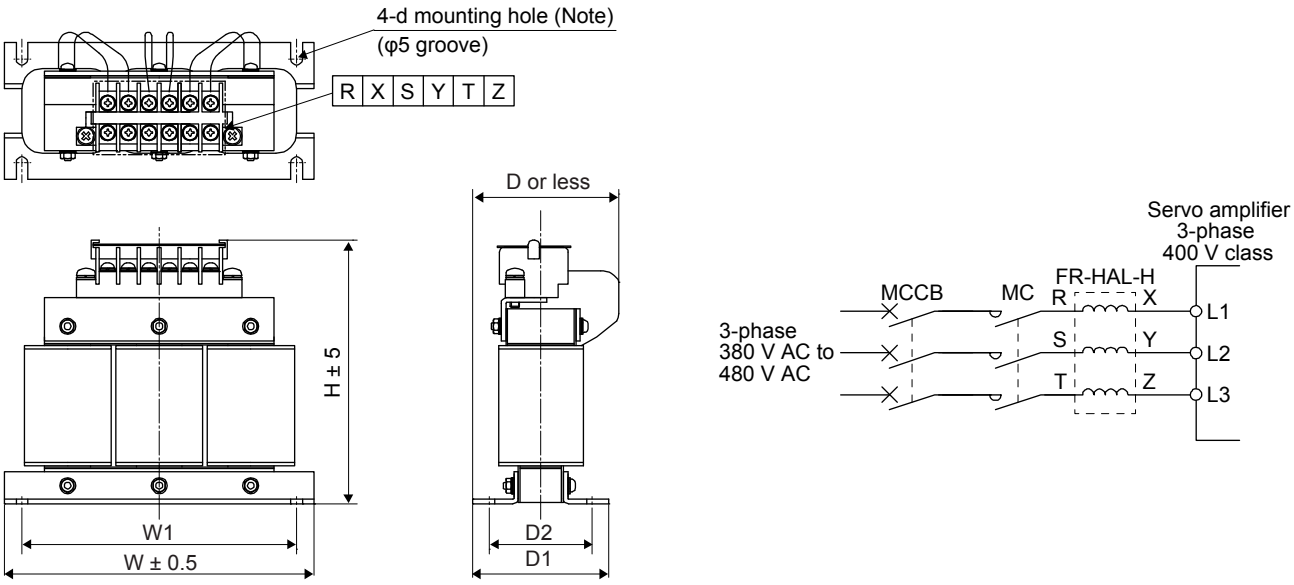

Fig. 11.10

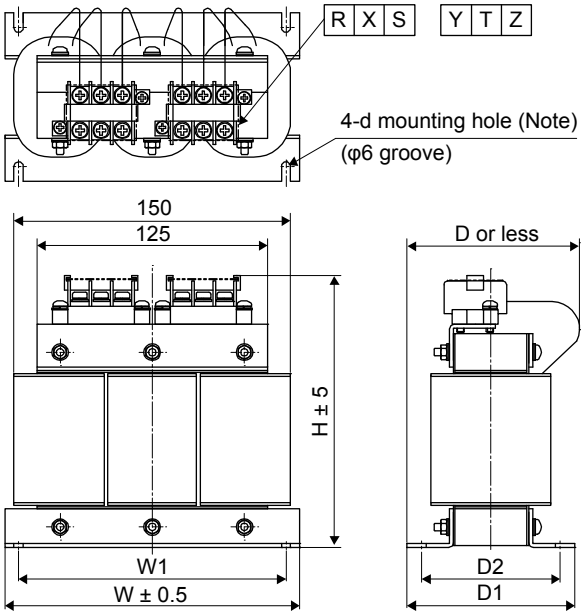

Fig. 11.11

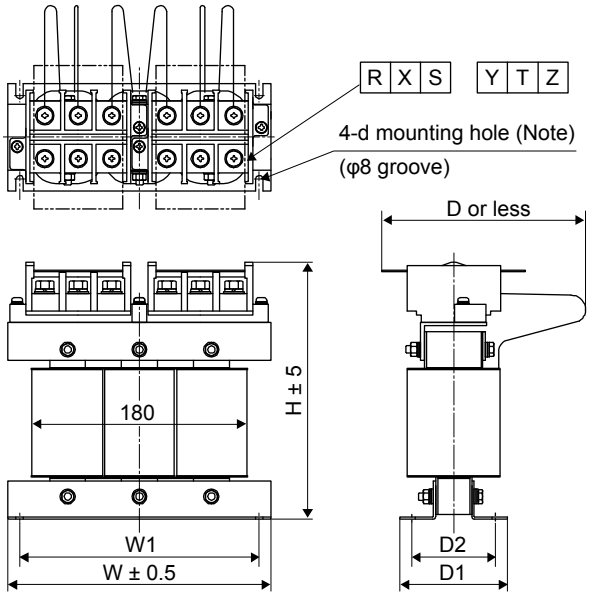

Fig. 11.12

Note. Use this for grounding.

Servo amplifier	Power factor improving AC reactor	Dimensions	Dimensions [mm]							Terminal size	Mass [kg]
			W	W1	H	D (Note)	D1	D2	d		
MR-J4-60TM4	FR-HAL-H1.5K	Fig. 11.10	135	120	115	59	59.6	45	M4	M3.5	1.5
MR-J4-100TM4	FR-HAL-H2.2K		135	120	115	59	59.6	45	M4	M3.5	1.5
MR-J4-200TM4	FR-HAL-H3.7K		135	120	115	69	70.6	57	M4	M3.5	2.5
MR-J4-350TM4	FR-HAL-H7.5K	Fig. 11.11	160	145	142	91	91	75	M4	M4	5.0
MR-J4-500TM4	FR-HAL-H11K		160	145	146	91	91	75	M4	M5	6.0
MR-J4-700TM4 MR-J4-11KTM4	FR-HAL-H15K		220	200	195	105	90	70	M5	M5	9.0
MR-J4-15KTM4	FR-HAL-H22K	Fig. 11.12	220	200	215	170	90	70	M5	M8	9.5
MR-J4-22KTM4	FR-HAL-H30K		220	200	215	170	96	75	M5	M8	11

Note. Maximum dimensions. The dimension varies depending on the input/output lines.

11.13 Relay (recommended)

The following relays should be used with the interfaces

Interface	Selection example
Digital input (interface DI-1) Relay used for digital input command signals	To prevent defective contacts, use a relay for small signal (twin contacts). (Ex.) Omron : type G2A, MY
Digital output (interface DO-1) Relay used for digital output signals	Small relay with 12 V DC or 24 V DC of rated current 40 mA or less (Ex.) Omron : type MY

11.14 Noise reduction techniques

Noises are classified into external noises which enter the servo amplifier to cause it to malfunction and those radiated by the servo amplifier to cause peripheral equipment to malfunction. Since the servo amplifier is an electronic device which handles small signals, the following general noise reduction techniques are required. Also, the servo amplifier can be a source of noise as its outputs are chopped by high carrier frequencies. If peripheral equipment malfunctions due to noises produced by the servo amplifier, noise suppression measures must be taken. The measures will vary slightly with the routes of noise transmission.

(1) Noise reduction techniques

(a) General reduction techniques

- Avoid bundling power lines (input/output) and signal cables together or running them in parallel to each other. Separate the power lines from the signal cables.
- Use a shielded twisted pair cable for connection with the encoder and for control signal transmission, and connect the external conductor of the cable to the SD terminal.
- Ground the servo amplifier, servo motor, etc. together at one point. (Refer to section 3.10.)

(b) Reduction techniques for external noises that cause the servo amplifier to malfunction

If there are noise sources (such as a magnetic contactor, an electromagnetic brake, and many relays which make a large amount of noise) near the servo amplifier and the servo amplifier may malfunction, the following countermeasures are required.

- Provide surge absorbers on the noise sources to suppress noises.
- Attach data line filters to the signal cables.
- Ground the shields of the encoder connecting cable and the control signal cables with cable clamp fittings.
- Although a surge absorber is built into the servo amplifier, to protect the servo amplifier and other equipment against large exogenous noise and lightning surge, attaching a varistor to the power input section of the equipment is recommended.

(c) Techniques for noises radiated by the servo amplifier that cause peripheral equipment to malfunction

Noises produced by the servo amplifier are classified into those radiated from the cables connected to the servo amplifier and its main circuits (input and output circuits), those induced electromagnetically or statically by the signal cables of the peripheral equipment located near the main circuit cables, and those transmitted through the power supply cables.

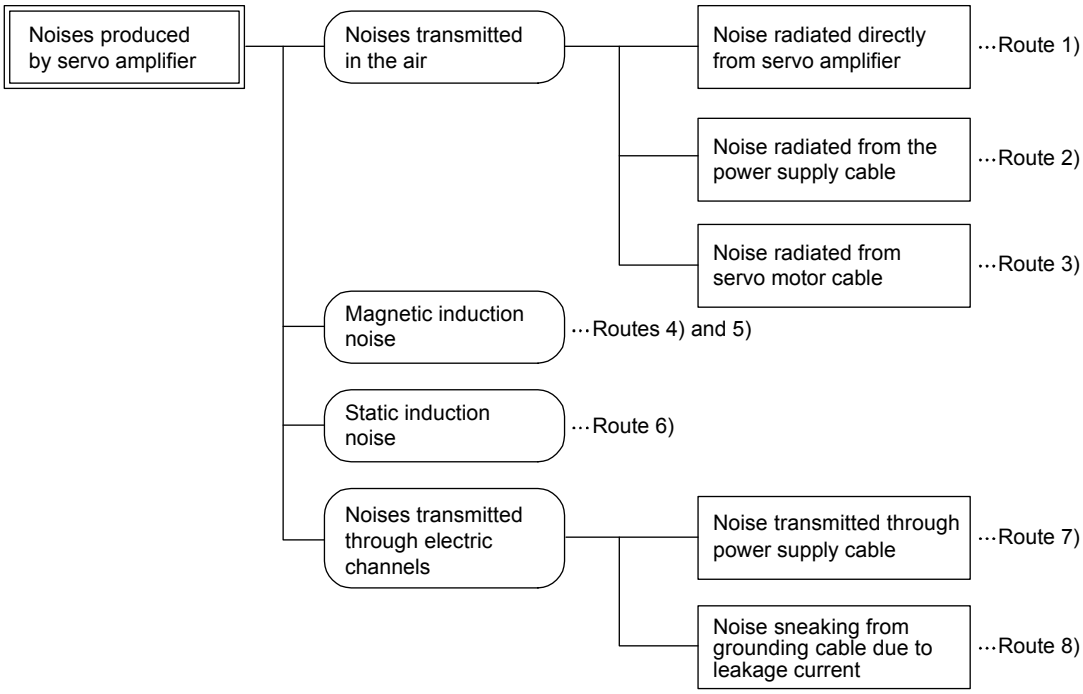

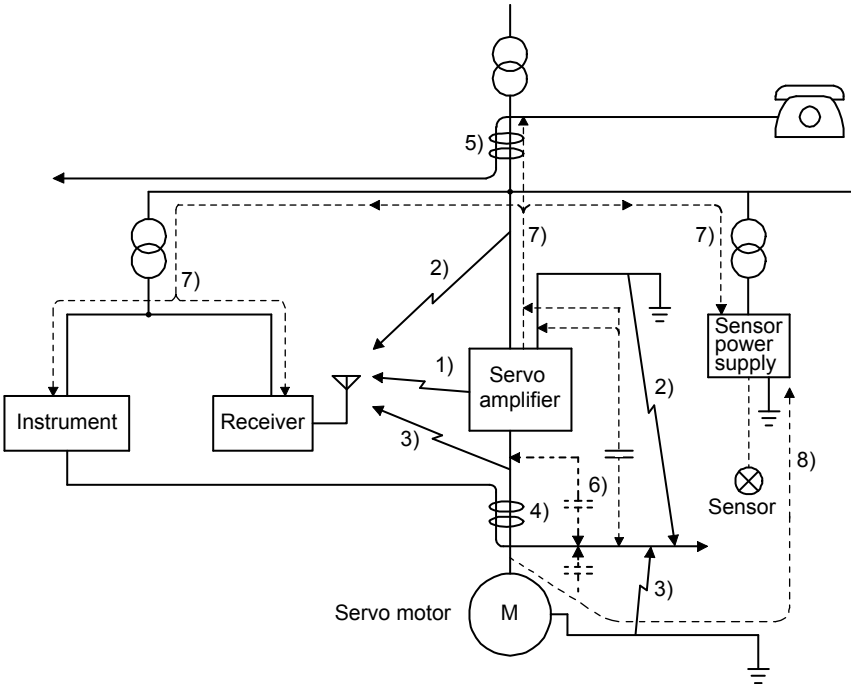

Noise transmission route	Suppression techniques
1) 2) 3)	When measuring instruments, receivers, sensors, etc. which handle weak signals and may malfunction due to noise and/or their signal cables are contained in a cabinet together with the servo amplifier or run near the servo amplifier, such devices may malfunction due to noises transmitted through the air. The following techniques are required. 1. Provide maximum clearance between easily affected devices and the servo amplifier. 2. Provide maximum clearance between easily affected signal cables and the I/O cables of the servo amplifier. 3. Avoid wiring the power lines (input/output lines of the servo amplifier) and signal lines side by side or bundling them together. 4. Insert a line noise filter to the I/O cables or a radio noise filter on the input line. 5. Use shielded wires for the signal and power lines, or put the lines in separate metal conduits.
4) 5) 6)	When the power lines and the signal lines are laid side by side or bundled together, magnetic induction noise and static induction noise will be transmitted through the signal cables and malfunction may occur. The following techniques are required. 1. Provide maximum clearance between easily affected devices and the servo amplifier. 2. Provide maximum clearance between easily affected signal cables and the I/O cables of the servo amplifier. 3. Avoid wiring the power lines (input/output lines of the servo amplifier) and signal lines side by side or bundling them together. 4. Use shielded wires for the signal and power lines, or put the lines in separate metal conduits.
7)	When the power supply of peripheral equipment is connected to the power supply of the servo amplifier system, noises produced by the servo amplifier may be transmitted back through the power supply cable and the devices may malfunction. The following techniques are required. 1. Install the radio noise filter (FR-BIF(-H)) on the power lines (Input lines) of the servo amplifier. 2. Install the line noise filter (FR-BSF01/FR-BLF) on the power lines of the servo amplifier.
8)	If the grounding wires of the peripheral equipment and the servo amplifier make a closed loop circuit, leakage current may flow through, causing the equipment to malfunction. In this case, the malfunction may be prevented by the grounding wires disconnected from the equipment.

(d) Noise reduction techniques for the network cable

POINT
●Take measures against noise for both ends of the network cable.

When using it in an environment with excessive noise, directly connect the shield of the network cable to the ground plate with cable clamp fittings at a place 200 mm to 300 mm or less from the servo amplifier.
When connecting the network cable from outside the cabinet, connect it to the ground plate at a place 5 mm to 10 mm away from the cabinet entrance.
To reinforce measures against noise, it is recommended to install a data line filter (TDK ZCAT1730-0730) to the network cable. Install the data line filter to a place 80 mm or less from the servo amplifier.

1) For inside the cabinet
   a) When using cable clamp fittings

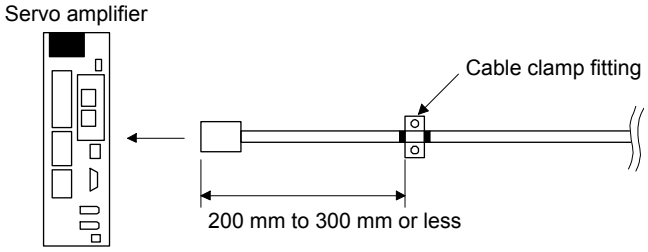

   b) When using a data line filter

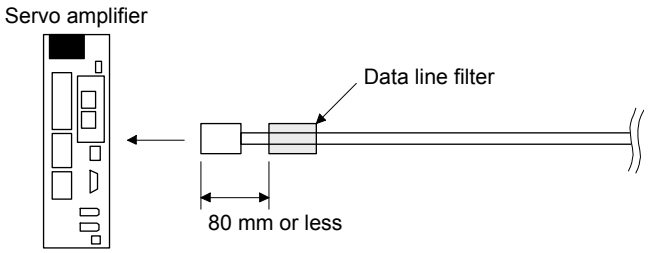

2) For outside the cabinet
   a) When using cable clamp fittings

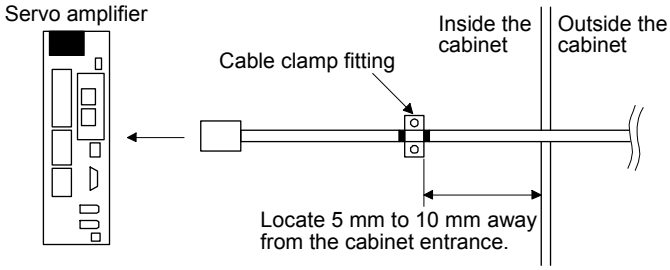

   b) When using a data line filter

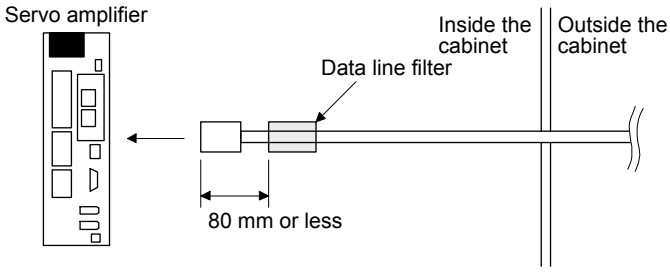

(2) Noise reduction techniques

(a) Data line filter (recommended)

Noise can be prevented by installing a data line filter onto the encoder cable, etc.
For example, ZCAT3035-1330 by TDK, ESD-SR-250 by NEC TOKIN, GRFC-13 by Kitagawa Industries, and E04SRM563218 by SEIWA ELECTRIC are available as data line filters.
As a reference example, the impedance specifications of the ZCAT3035-1330 (TDK) are indicated below. These impedances are reference values and not guaranteed values.

Impedance [Ω]	
10 MHz to 100 MHz	100 MHz to 500 MHz
80	150

[Unit: mm]

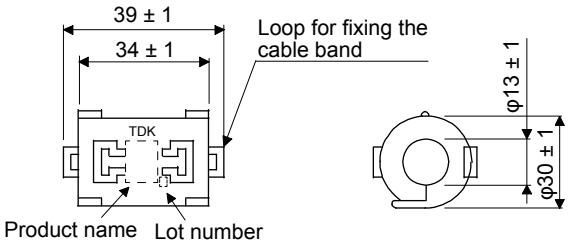

Outline drawing (ZCAT3035-1330)

(b) Surge killer (recommended)

Use of a surge killer is recommended for AC relay, magnetic contactor or the like near the servo amplifier. Use the following surge killer or equivalent.

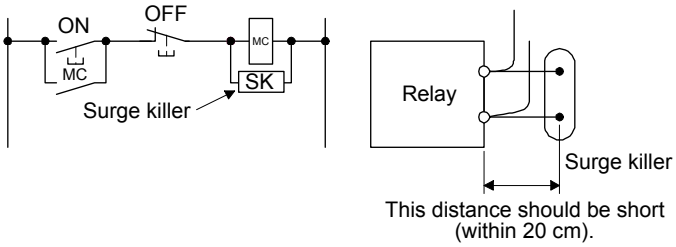

(Ex.) CR-50500 Okaya Electric Industries)

Rated voltage AC [V]	C [μF ± 20%]	R [Ω ± 30%]	Test voltage
250	0.5	50 (1/2W)	Between terminals: 625 V AC, 50 Hz/60 Hz 60 s Between terminal and case: 2000 V AC 50/60 Hz 60 s

Dimensions [Unit: mm]

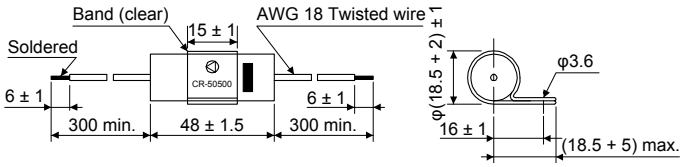

Note that a diode should be installed to a DC relay or the like.
Maximum voltage: Not less than four times the drive voltage of the relay or the like.
Maximum current: Not less than twice the drive current of the relay or the like.

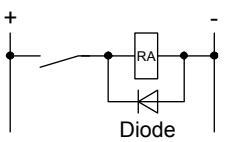

(c) Cable clamp fitting AERSBAN-_SET

Generally, connecting the grounding of the shielded wire to the SD terminal of the connector provides a sufficient effect. However, the effect can be increased when the shielded wire is connected directly to the grounding plate as shown below.

Install the grounding plate near the servo amplifier for the encoder cable. Peel part of the cable sheath to expose the external conductor, and press that part against the grounding plate with the cable clamp. If the cable is thin, clamp several cables in a bunch.

The cable clamp comes as a set with the grounding plate.

[Unit: mm]

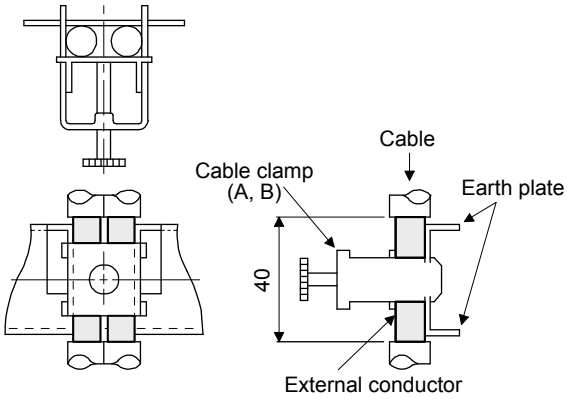

Clamp section diagram

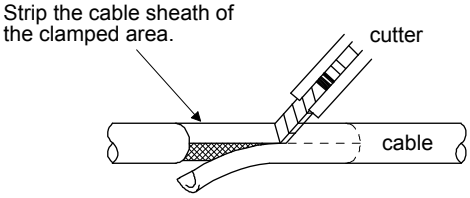

・Dimensions

[Unit: mm]

Earth plate

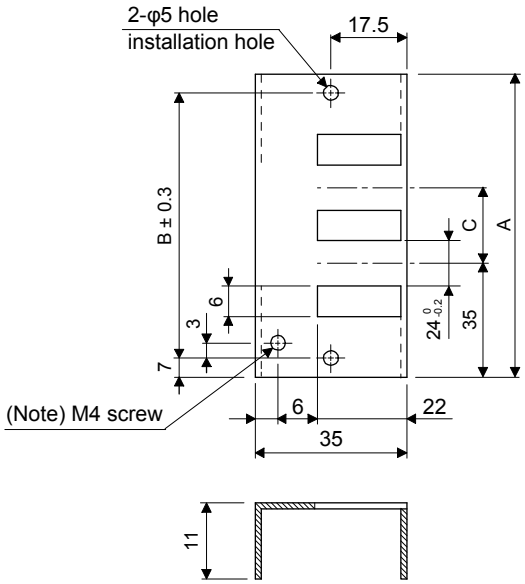

[Unit: mm]

Clamp section diagram

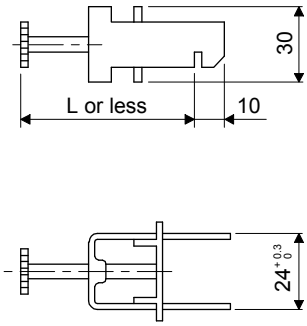

Note. Screw hole for grounding. Connect it to the grounding plate of the cabinet.

Model	A	B	C	Accessory fittings
AERSBAN-DSET	100	86	30	Clamp A: 2pcs.
AERSBAN-ESET	70	56		Clamp B: 1pc.

Clamp fitting	L
A	70
B	45

(d) Line noise filter (FR-BSF01/FR-BLF)

This filter is effective in suppressing noises radiated from the power supply side and output side of the servo amplifier and also in suppressing high-frequency leakage current (0-phase current). It especially affects the noises between 0.5 MHz and 5 MHz band.

Connection diagram	Dimensions [Unit: mm]
The line noise filters can be mounted on lines of the main power supply (L1/L2/L3) and of the servo motor power (U/V/W). Pass each of the wires through the line noise filter an equal number of times in the same direction. For wires of the main power supply, the effect of the filter rises as the number of passes increases, but generally four passes would be appropriate. For the servo motor power lines, passes must be four times or less. Do not pass the grounding wire through the filter. Otherwise, the effect of the filter will drop. Wind the wires by passing through the filter to satisfy the required number of passes as shown in Example 1. If the wires are too thick to wind, use two or more filters to have the required number of passes as shown in Example 2. Place the line noise filters as close to the servo amplifier as possible for their best performance. 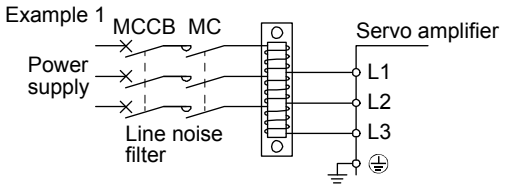 (Number of passes: 4) 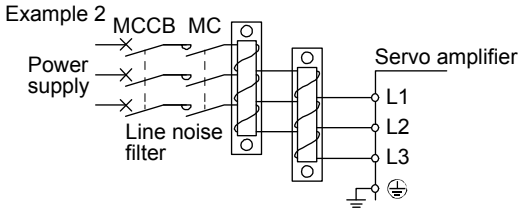 Two filters are used (Total number of passes: 4)	FR-BSF01 (for wire size 3.5 mm² (AWG 12) or less) 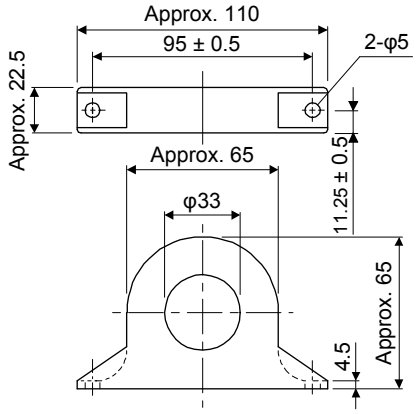 FR-BLF (for wire size 5.5 mm² (AWG 10) or more) 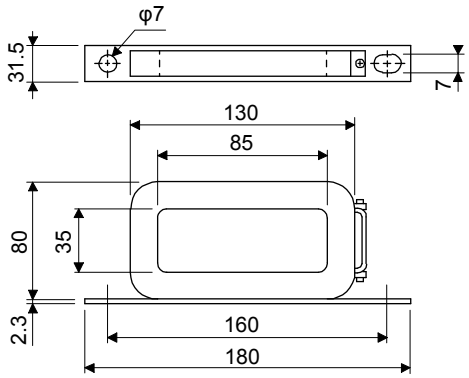

(e) Radio noise filter (FR-BIF(-H))

This filter is effective in suppressing noises radiated from the power supply side of the servo amplifier especially in 10 MHz and lower radio frequency bands. The FR-BIF is designed for the input only.

200 V class/100 V class: FR-BIF

400 V class: FR-BIF-H

Connection diagram	Dimensions [Unit: mm]
Make the connection cables as short as possible. Grounding is always required. When using the FR-BIF with a single-phase power supply, always insulate the lead wires that are not used for wiring. ・MR-J4-350TM or less/MR-J4-350TM4(-RJ) or less/MR-J4-40TM1(-RJ) or less 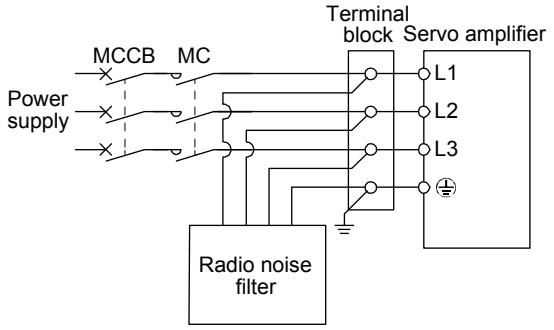 ・MR-J4-500TM or more/MR-J4-500TM4(-RJ) or more 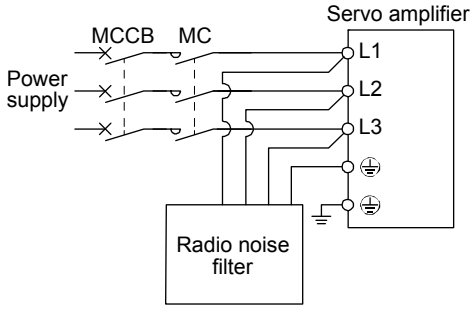 	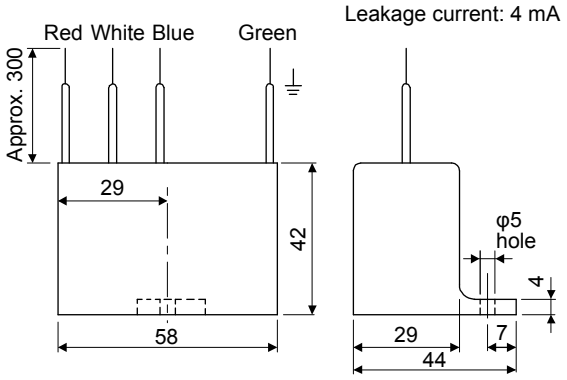

(f) Varistor for input power supply (recommended)

Varistors are effective to prevent exogenous noise and lightning surge from entering the servo amplifier. When using a varistor, connect it between each phase of the input power supply of the equipment. For varistors, the TND20V-431K, TND20V-471K and TND20V-102K, manufactured by NIPPON CHEMI-CON, are recommended. For detailed specification and usage of the varistors, refer to the manufacturer catalog.

Power supply voltage	Varistor	Maximum rating					Maximum limit voltage		Static capacity (reference value)	Varistor voltage rating (range) V1 mA
		Permissible circuit voltage		Surge current immunity	Energy immunity	Rated pulse power	[A]	[V]		
		AC [Vrms]	DC [V]	8/20 μs [A]	2 ms [J]	[W]			[pF]	[V]
200 V class/ 100 V class	TND20V-431K	275	350	10000/1 times	195	1.0	100	710	1300	430 (387 to 473)
	TND20V-471K	300	385	7000/2 times	215			775	1200	470 (423 to 517)
400 V class	TND20V-102K	625	825	7500/1 time 6500/2 times	400	1.0	100	1650	560	1000 (900 to 1100)

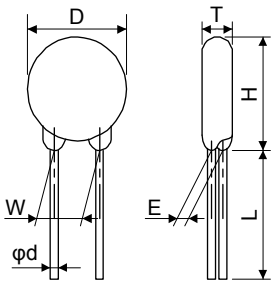

[Unit: mm]

Model	D Max.	H Max.	T Max.	E ±1.0	(Note) L Min.	φd ±0.05	W ±1.0
TND20V-431K	21.5	24.5	6.4	3.3	20	0.8	10.0
TND20V-471K			6.6	3.5			
TND20V-102K	22.5	25.5	9.5	6.4	20	0.8	10.0

Note. For special purpose items for lead length (L), contact the manufacturer.

11.15 Earth-leakage current breaker

(1) Selection method

High-frequency chopper currents controlled by pulse width modulation flow in the AC servo circuits. Leakage currents containing harmonic contents are larger than those of the motor which is run with a commercial power supply.

Select an earth-leakage current breaker according to the following formula, and ground the servo amplifier, servo motor, etc. securely.

To minimize leakage currents, make the input and output wires as short as possible, and keep a distance of 30 cm or longer between the wires and ground.

Rated sensitivity current ≥ 10 • {Ig1 + Ign + Iga + K • (Ig2 + Igm)} [mA] ····· (11.1)

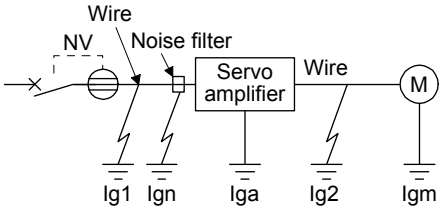

Earth-leakage current breaker		K
Type	Mitsubishi Electric products	
Models provided with harmonic and surge reduction techniques	NV-SP NV-SW NV-CP NV-CW NV-HW	1
General models	BV-C1 NFB NV-L	3

Ig1: Leakage current on the electric channel from the earth-leakage current breaker to the input terminals of the servo amplifier (Found from Fig. 11.13.)

Ig2: Leakage current on the electric channel from the output terminals of the servo amplifier to the servo motor (Found from Fig. 11.13.)

Ign: Leakage current when a filter is connected to the input side (4.4 mA per one FR-BIF(-H))

Iga: Leakage current of the servo amplifier (Found from table 11.5.)

Igm: Leakage current of the servo motor (Found from table 11.4.)

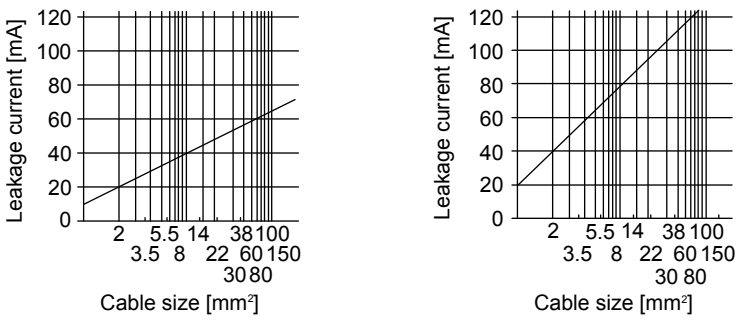

200 V class/100 V class (Note) 400 V class

Note. "Ig1" of 100 V class servo amplifiers will be 1/2 of 200 V class servo amplifiers.

Fig. 11.13 Example of leakage current per km (Ig1, Ig2) for CV cable run in metal conduit

Table 11.4 Servo motor leakage current example (Igm)

Servo motor power [kW]	Leakage current [mA]
0.05 to 1	0.1
1.2 to 2	0.2
3 to 3.5	0.3
4.2 to 5	0.5
6 to 7	0.7
8 to 11	1.0
12 to 15	1.3
20 to 25	2.3

Table 11.5 Servo amplifier leakage current example (Iga)

Servo amplifier capacity [kW]	Leakage current [mA]
0.1 to 0.6	0.1
0.75 to 3.5	0.15
5/7	2
11/15	5.5
22	7

Table 11.6 Earth-leakage current breaker selection example

Servo amplifier	Rated sensitivity current of earth-leakage current breaker [mA]
MR-J4-10TM to MR-J4-350TM MR-J4-60TM4 to MR-J4-350TM4 MR-J4-10TM1 to MR-J4-40TM1	15
MR-J4-500TM MR-J4-500TM4	30
MR-J4-700TM MR-J4-700TM4	50
MR-J4-11KTM to MR-J4-22KTM MR-J4-11KTM4 to MR-J4-22KTM4	100

(2) Selection example

Indicated below is an example of selecting an earth-leakage current breaker under the following conditions.

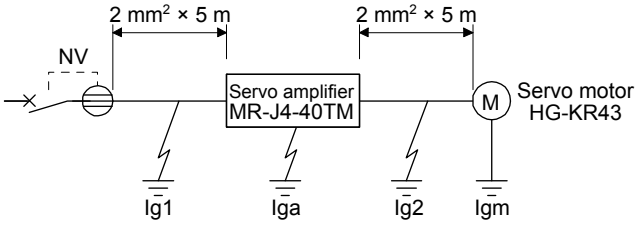

Use an earth-leakage current breaker designed for suppressing harmonics/surges.
Find the terms of equation (11.1) from the diagram.

$$Ig1 = 20 \cdot \frac{5}{1000} = 0.1 \text{ [mA]}$$

$$Ig2 = 20 \cdot \frac{5}{1000} = 0.1 \text{ [mA]}$$

Ign = 0 (not used)

Iga = 0.1 [mA]

Igm = 0.1 [mA]

Insert these values in equation (11.1).

$$Ig \geq 10 \cdot \{0.1 + 0 + 0.1 + 1 \cdot (0.1 + 0.1)\}$$
$$\geq 4 \text{ [mA]}$$

According to the result of calculation, use an earth-leakage current breaker having the rated sensitivity current (Ig) of 4.0 mA or more.
An earth-leakage current breaker having Ig of 15 mA is used with the NV-SP/SW/CP/CW/HW series.

11.16 EMC filter (recommended)

POINT

●For when multiple servo amplifiers are connected to one EMC filter, refer to section 6.4 of "EMC Installation Guidelines".

It is recommended that one of the following filters be used to comply with EN EMC directive. Some EMC filters have large in leakage current.

(1) Combination with the servo amplifier

Servo amplifier	Recommended filter (Soshin Electric)				Mass [kg]
	Model	Rated current [A]	Rated voltage [VAC]	Leakage current [mA]	
MR-J4-10TM to MR-J4-100TM	HF3010A-UN (Note)	10	250	5	3.5
MR-J4-200TM MR-J4-350TM	HF3010A-UN (Note)	30			5.5
MR-J4-500TM MR-J4-700TM	HF3040A-UN (Note)	40		6.5	6
MR-J4-11KTM MR-J4-15KTM MR-J4-22KTM	HF3100A-UN (Note)	100			12
MR-J4-60TM4 MR-J4-100TM4	TF3005C-TX	5	500	5.5	6
MR-J4-200TM4 to MR-J4-700TM4	TF3020C-TX	20			
MR-J4-11KTM4	TF3030C-TX	30			7.5
MR-J4-15KTM4	TF3040C-TX	40			12.5
MR-J4-22KTM4	TF3060C-TX	60			
MR-J4-10TM1 to MR-J4-40TM1	HF3010A-UN (Note)	10	250	5	3.5

Note. To use any of these EMC filters, the surge protector RSPD-500-U4 (Okaya Electric Industries) is required.

Servo amplifier	Recommended filter (COSEL)				Mass [kg]
	Model	Rated current [A]	Rated voltage [VAC]	Leakage current [mA]	
MR-J4-11KTM to MR-J4-22KTM	FTB-100-355-L (Note)	100	500	40	5.3
MR-J4-22KTM4	FTB-80-355-L (Note)	80	500	80	5.3

Note. To use any of these EMC filters, the surge protector RSPD-500-U4 (Okaya Electric Industries) is required.

(2) Connection example

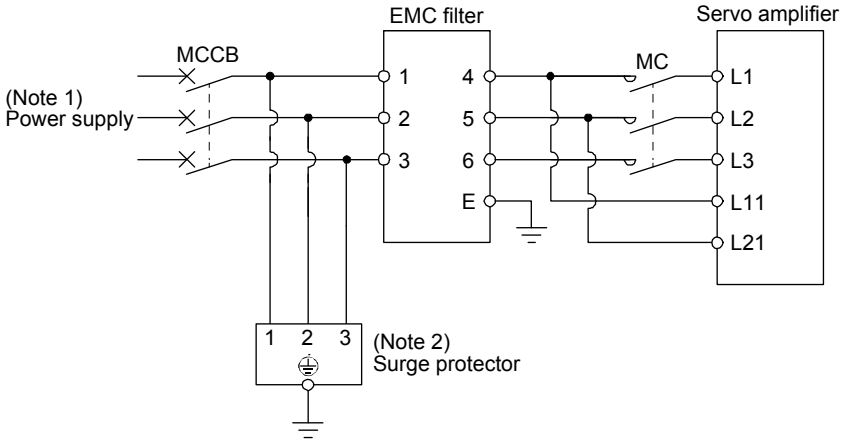

Note 1. Refer to section 1.3 for the power supply specifications.
2. The example is when a surge protector is connected.

(3) Dimensions

(a) EMC filter

HF3010A-UN

[Unit: mm]

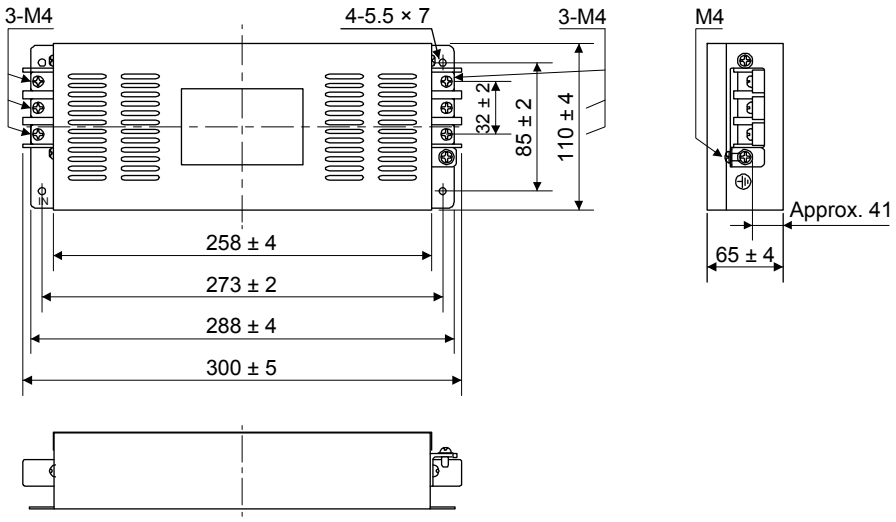

HF3030A-UN/HF-3040A-UN

[Unit: mm]

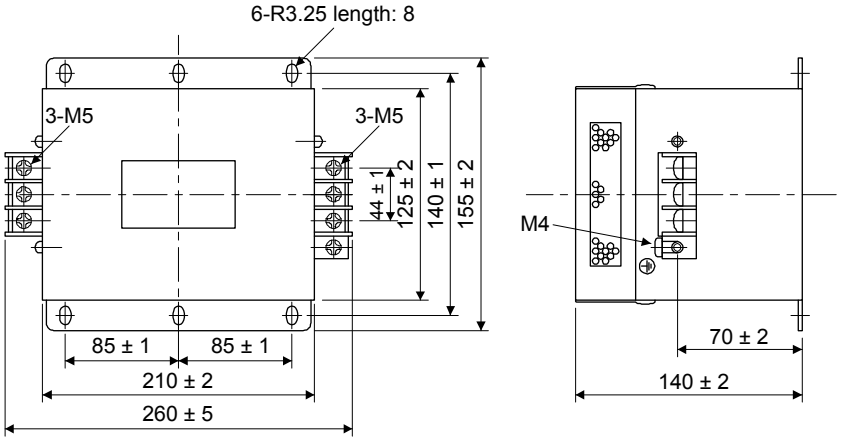

HF3100A-UN

[Unit: mm]

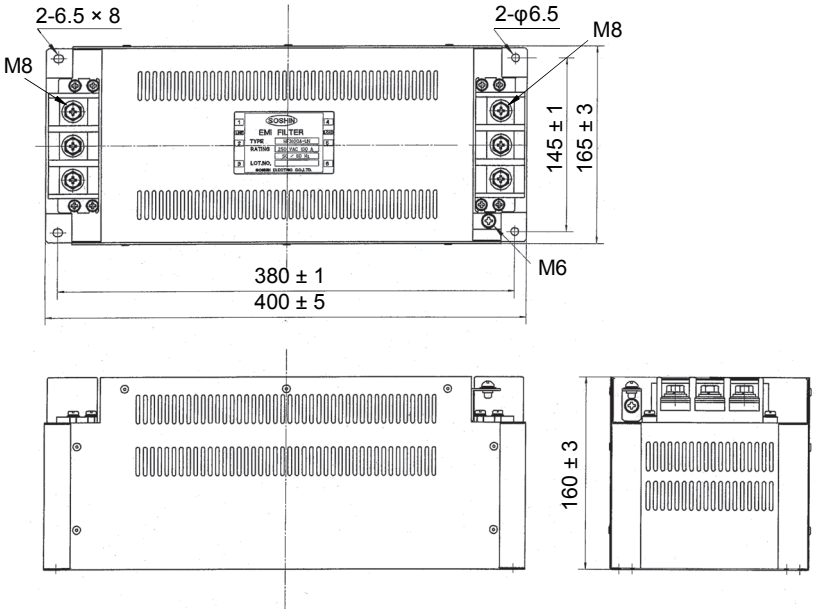

TF3005C-TX/TX3020C-TX/TF3030C-TX

[Unit: mm]

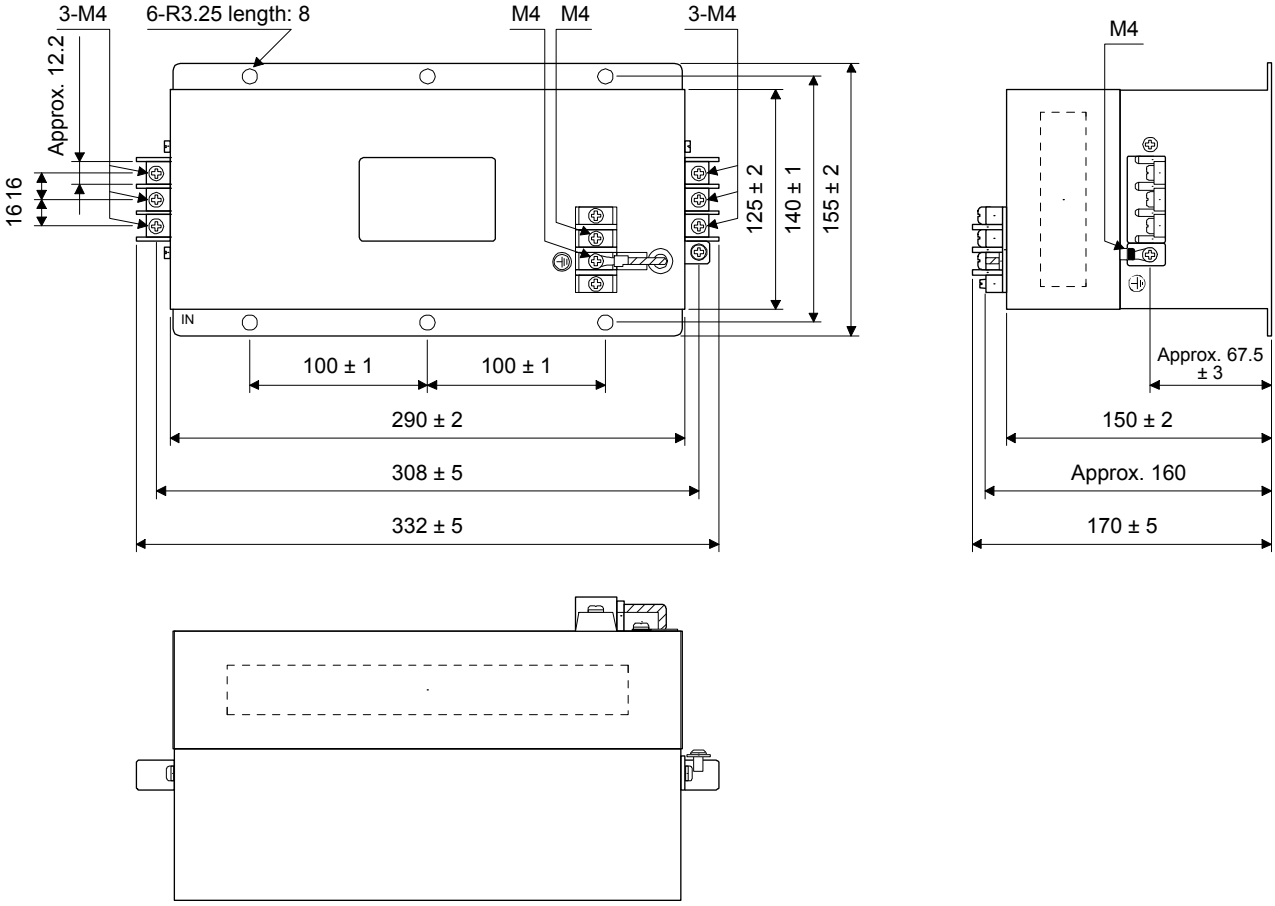

TF3040C-TX/TF3060C-TX

[Unit: mm]

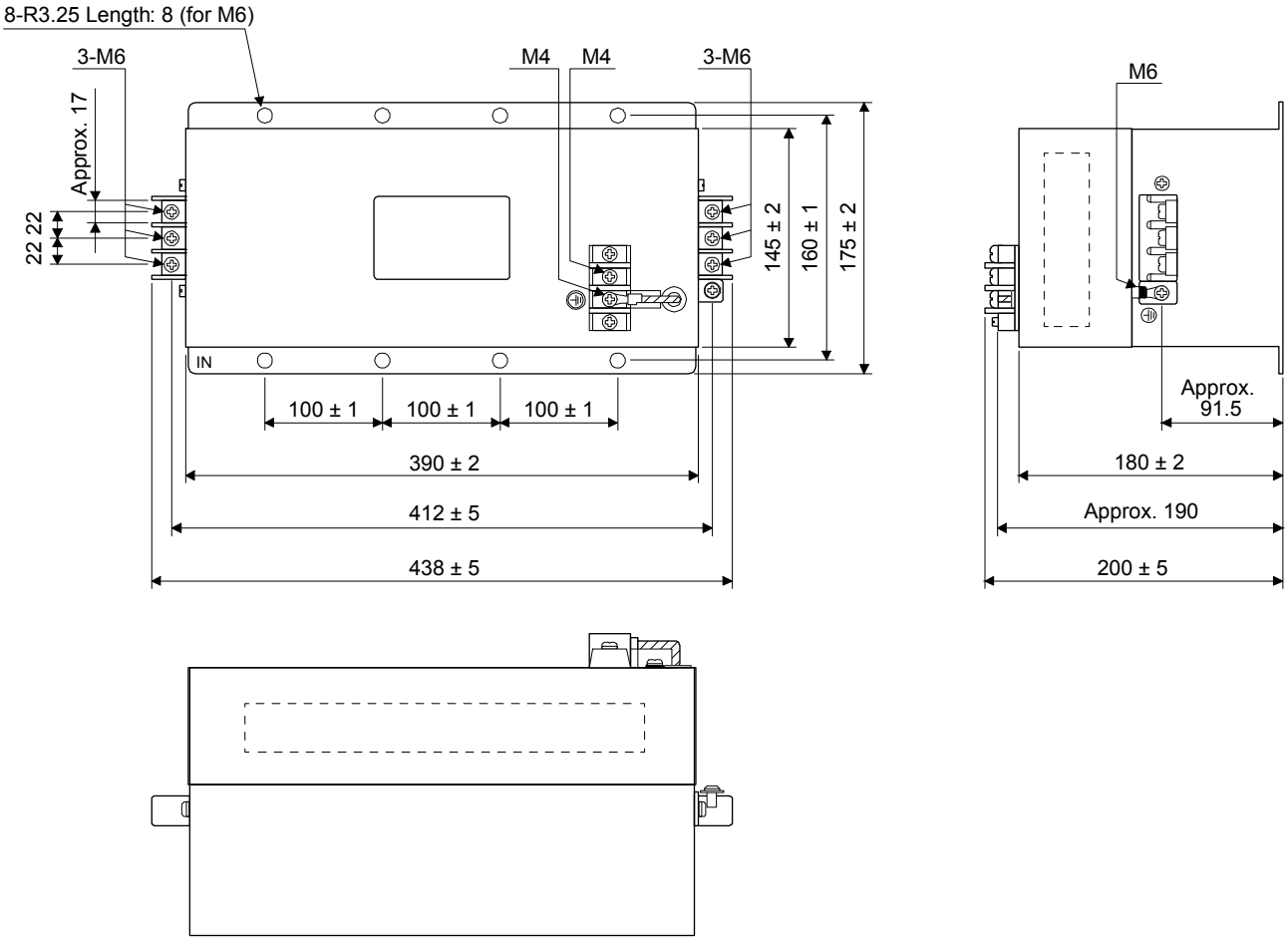

FTB-100-355-L/FTB-80-355-L

[Unit: mm]

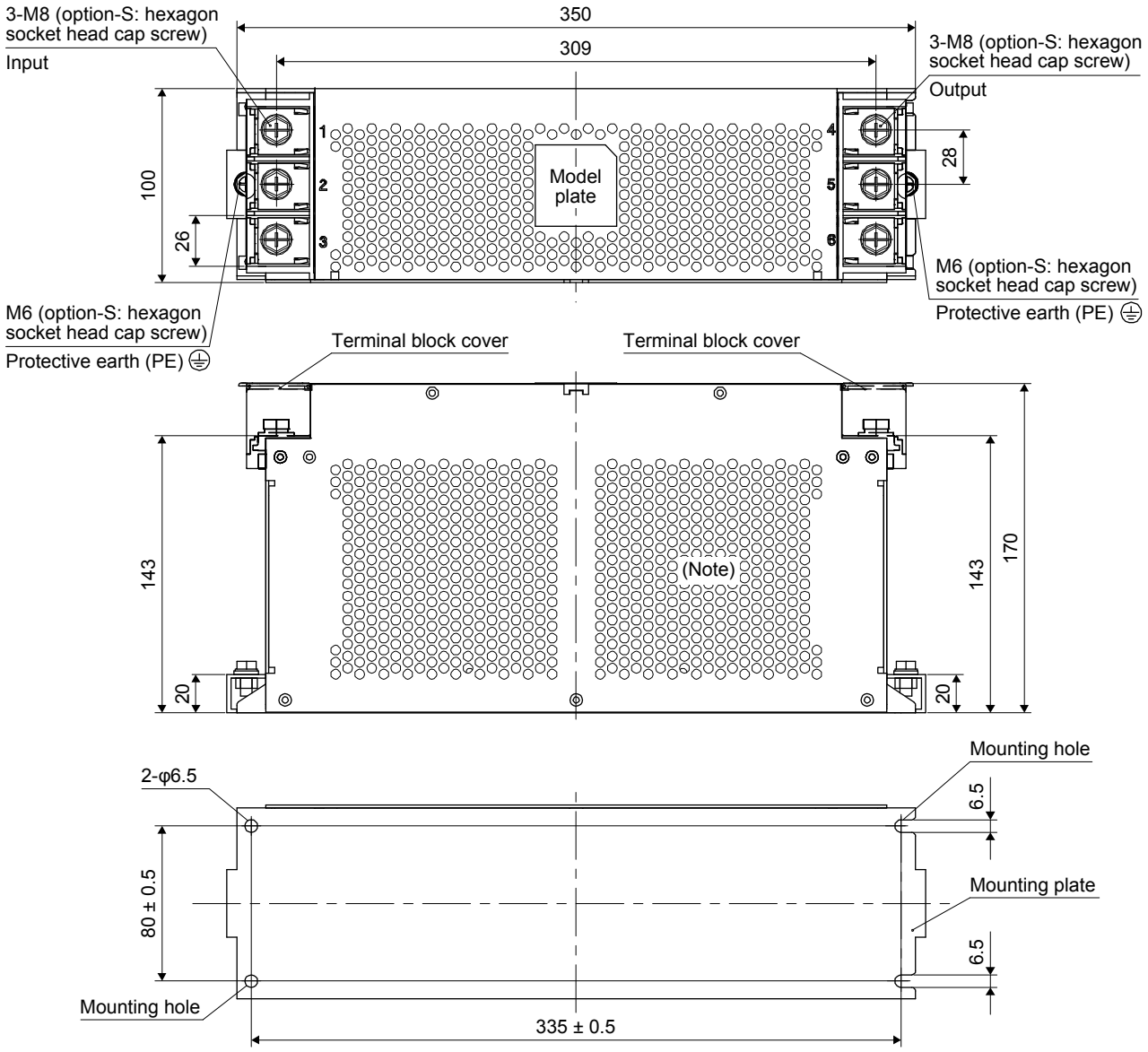

Note. No heat radiation holes on the opposite face.

(b) Surge protector
RSPD-250-U4/RSPD-500-U4

[Unit: mm]

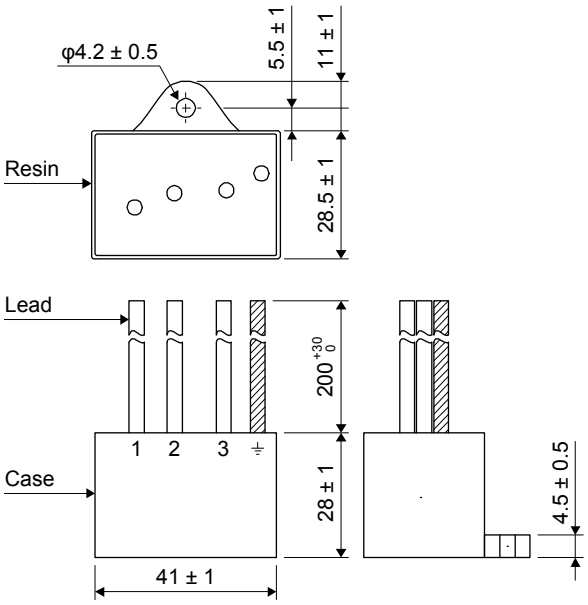

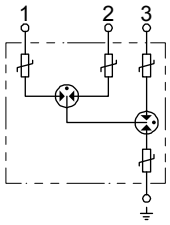

11.17 External dynamic brake

⚠CAUTION

- Use an external dynamic brake for a servo amplifier of MR-J4-11KTM to MR-J4-22KTM and MR-J4-11KTM4 to MR-J4-22KTM4. Failure to do so will cause an accident because the servo motor does not stop immediately but coasts at an alarm occurrence for which the servo motor does not decelerate to stop. Ensure the safety in the entire equipment. For alarms for which the servo motor does not decelerate to stop, refer to chapter 8.
- The external dynamic brake cannot be used for compliance with SEMI-F47 standard. Do not assign DB (Dynamic brake interlock) in [Pr. PD07] to [Pr. PD09]. Failure to do so will cause the servo amplifier to become servo-off when an instantaneous power failure occurs.

POINT

- EM2 has the same function as EM1 in the torque mode.
- Configure up a sequence which switches off the magnetic contactor of the external dynamic brake after (or as soon as) the servo-on command has been turned off at a power failure or a malfunction.
- For the braking time taken when the external dynamic brake is operated, refer to section 10.3.
- The external dynamic brake is rated for a short duration. Do not use it very frequently.
- When using the 400 V class external dynamic brake, the power supply voltage is restricted to 1-phase 380 V AC to 463 V AC (50 Hz/60 Hz).
- Dynamic brake operates at occurrence of alarm, [AL. E6 Servo forced stop warning] or when power is turned off. Do not use external dynamic brake to stop in a normal operation as it is the function to stop in emergency.
- For a machine operating at the recommended load to motor inertia ratio or less, the estimated number of usage times of the external dynamic brake is 1000 times while the machine decelerates from the rated speed to a stop once in 10 minutes.
- Be sure to enable EM1 (Forced stop 1) after servo motor stops when using EM1 (Forced stop 1) frequently in other than emergency.

(1) Selection of external dynamic brake

The dynamic brake is designed to bring the servo motor to a sudden stop when a power failure occurs or the protective circuit is activated, and is built in the 7 kW or less servo amplifier. Since it is not built in the 11 kW or more servo amplifier, purchase it separately. Assign DB (Dynamic brake interlock) to any of CN3-9, CN3-13, and CN3-15 pins in [Pr. PD07] to [Pr. PD09].

Servo amplifier	External dynamic brake	Molded-case circuit breaker		Fuse (Class T)		Fuse (Class K5)	
		Frame, rated current	Voltage AC [V]	Current [A]	Voltage AC [V]	Current [A]	Voltage AC [V]
MR-J4-11KTM	DBU-11K	30 A frame 5 A	240	1	300	1	250
MR-J4-15KTM	DBU-15K						
MR-J4-22KTM	DBU-22K-R1						
MR-J4-11KTM4	DBU-11K-4	30 A frame 5 A	480	1	600	1	600
MR-J4-15KTM4	DBU-22K-4						
MR-J4-22KTM4							

(2) Connection example

(a) 200 V class

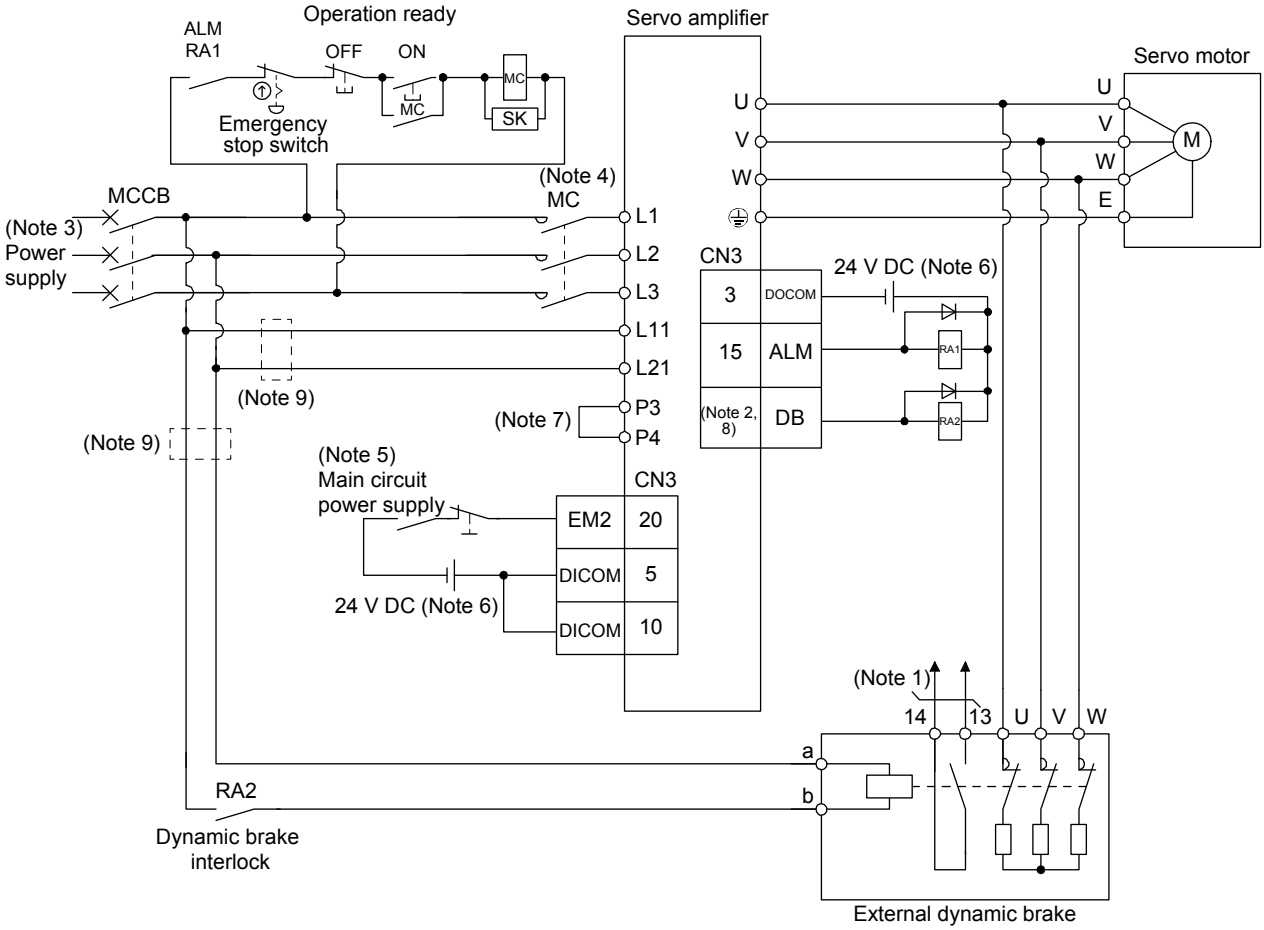

Note 1. Terminals 13 and 14 are normally open contact outputs. If the external dynamic brake is seized, terminals 13 and 14 will open. Therefore, configure up an external sequence to prevent servo-on.

2. Assign DB (Dynamic brake interlock) in [Pr. PD07] to [Pr. PD09].

3. For the power supply specifications, refer to section 1.3.

4. Depending on the main circuit voltage and operation pattern, bus voltage decreases, and that may cause the forced stop deceleration to shift to the dynamic brake deceleration. When dynamic brake deceleration is not required, slow the time to turn off the magnetic contactor.

5. Turn off EM2 when the main power circuit power supply is off.

6. The illustration of the 24 V DC power supply is divided between input signal and output signal for convenience. However, they can be configured by one.

7. Between P3 and P4 is connected by default. When using the power factor improving DC reactor, remove the short bar between P3 and P4. Refer to section 11.11 for details. Additionally, a power factor improving DC reactor and power factor improving AC reactor cannot be used simultaneously.

8. The external dynamic brake cannot be used for compliance with SEMI-F47 standard. Do not assign DB (Dynamic brake interlock) in [Pr. PD07] to [Pr. PD09]. Failure to do so will cause the servo amplifier to become servo-off when an instantaneous power failure occurs.

9. Install an overcurrent protection device (molded-case circuit breaker, fuse, or others) to protect the branch circuit. (Refer to section 11.10 and (1) in this section)

(b) 400 V class

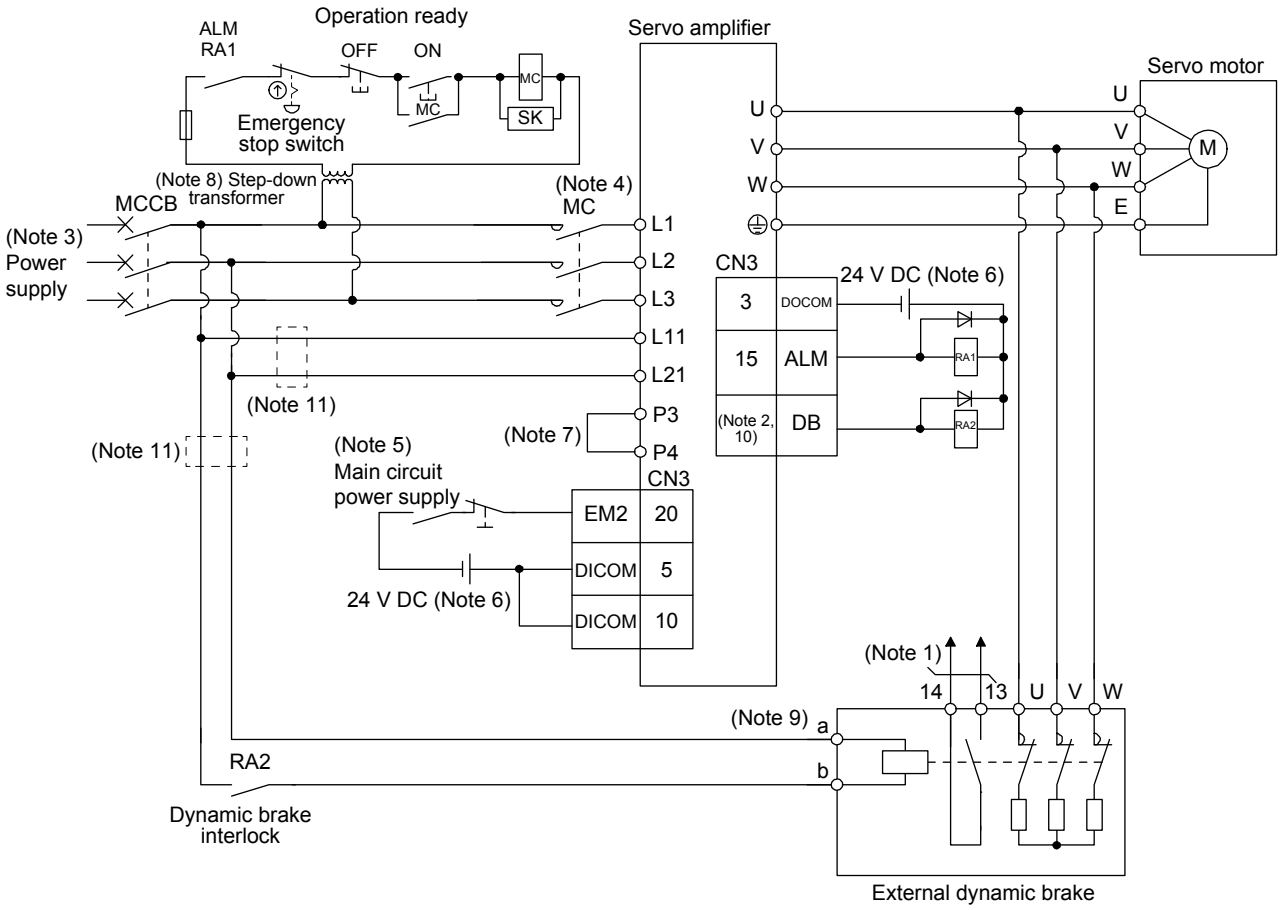

Note 1. Terminals 13 and 14 are normally open contact outputs. If the external dynamic brake is seized, terminals 13 and 14 will open. Therefore, configure an external sequence to prevent servo-on.

2. Assign DB (Dynamic brake interlock) in [Pr. PD07] to [Pr. PD09].
3. For power supply specifications, refer to section 1.3.
4. Depending on the main circuit voltage and operation pattern, bus voltage decreases, and that may cause the forced stop deceleration to shift to the dynamic brake deceleration. When dynamic brake deceleration is not required, slow the time to turn off the magnetic contactor.
5. Turn off EM2 when the main power circuit power supply is off.
6. The illustration of the 24 V DC power supply is divided between input signal and output signal for convenience. However, they can be configured by one.
7. Between P3 and P4 is connected by default. When using the power factor improving DC reactor, remove the short bar between P3 and P4. Refer to section 11.11 for details. Additionally, a power factor improving DC reactor and power factor improving AC reactor cannot be used simultaneously.
8. Stepdown transformer is required when the coil voltage of the magnetic contactor is 200 V class.
9. The power supply voltage of the inside magnet contactor for 400 V class external dynamic brake DBU-11K-4 and DBU-22K-4 is restricted as follows. When using these external dynamic brakes, use them within the range of the power supply.

External dynamic brake	Power supply voltage
DBU-11K-4 DBU-22K-4	1-phase 380 V AC to 463 V AC, 50 Hz/60 Hz

10. The external dynamic brake cannot be used for compliance with SEMI-F47 standard. Do not assign DB (Dynamic brake interlock) in [Pr. PD07] to [Pr. PD09]. Failure to do so will cause the servo amplifier to become servo-off when an instantaneous power failure occurs.
11. Install an overcurrent protection device (molded-case circuit breaker, fuse, or others) to protect the branch circuit. (Refer to section 11.10 and (1) in this section)

(3) Timing chart

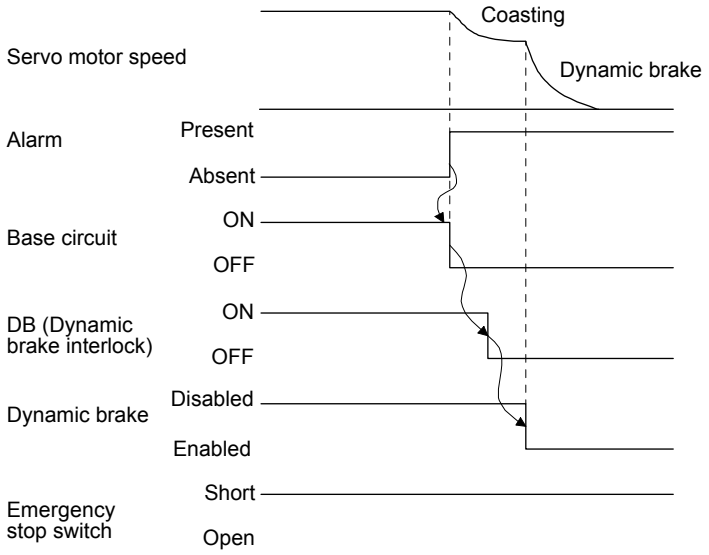

a. Timing chart at alarm occurrence

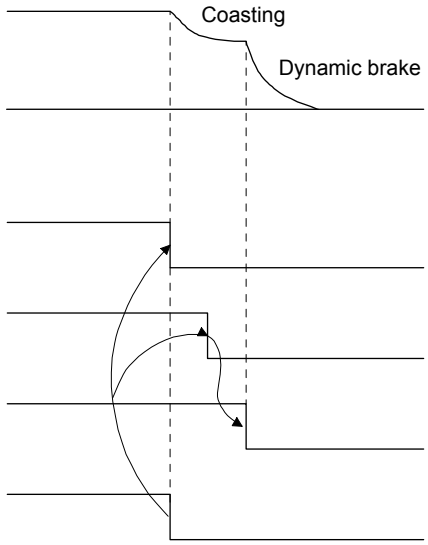

b. Timing chart at Emergency stop switch enabled

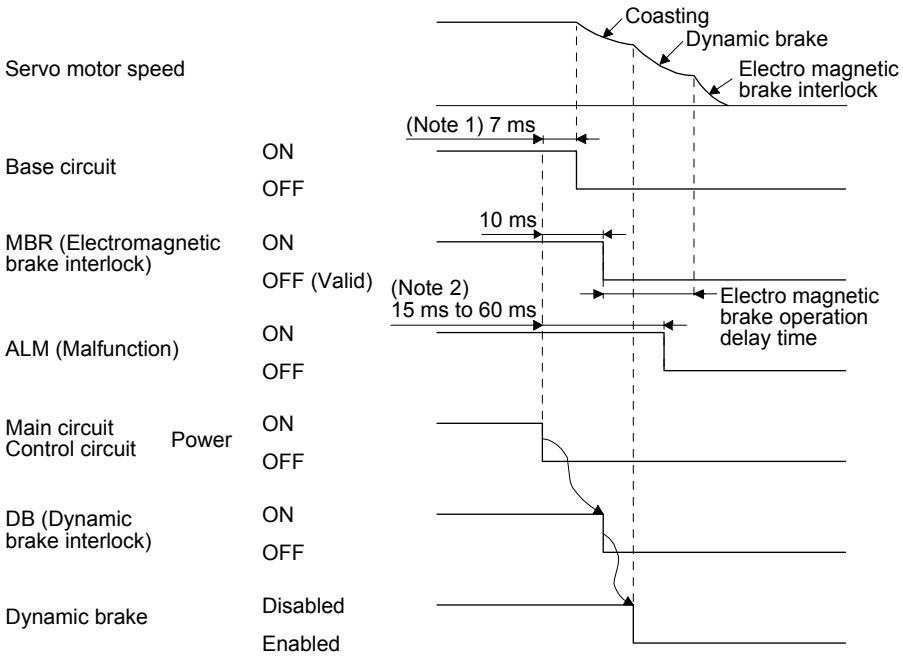

Note 1. When powering off, DB (Dynamic brake interlock) will be turned off, and the base circuit is turned off earlier than usual before an output shortage occurs. (Only when assigning the DB as the output signal)

2. Variable according to the operation status.

c. Timing chart when both of the main and control circuit power are off

(4) Dimensions

(a) DBU-11K/DBU-15K/DBU-22K-R1

[Unit: mm]

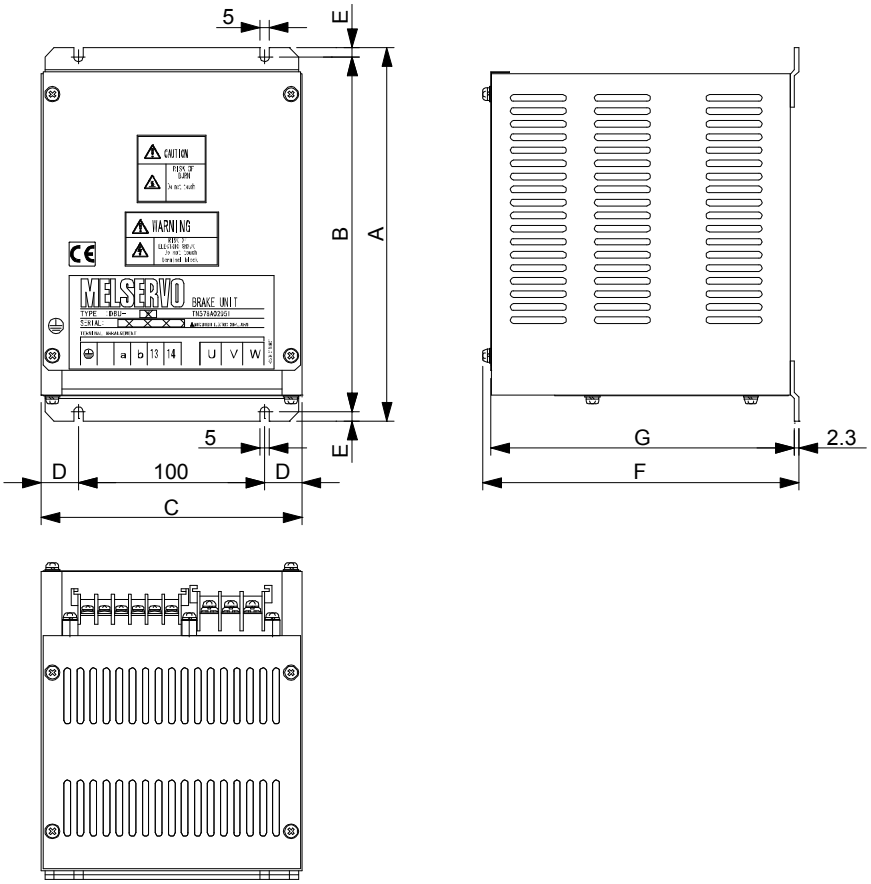

Terminal block

⏚		a	b	13	14

U	V	W

Screw: M3.5
Tightening torque: 0.8 [N•m]

Screw: M4
Tightening torque: 1.2 [N•m]

External dynamic brake	A	B	C	D	E	F	G	Mass [kg]	(Note) Connection wire [mm²]	
									U/V/W	Except U/V/W
DBU-11K	200	190	140	20	5	170	163.5	2	5.5 (AWG 10)	2 (AWG 14)
DBU-15K/DBU-22K-R1	250	238	150	25	6	235	228	6	5.5 (AWG 10)	2 (AWG 14)

Note. Selection conditions of wire size are as follows.
600 V grade heat-resistant polyvinyl chloride insulated wire (HIV wire)
Construction condition: Single wire set in midair

(b) DBU-11K-4/DBU-22K-4

[Unit: mm]

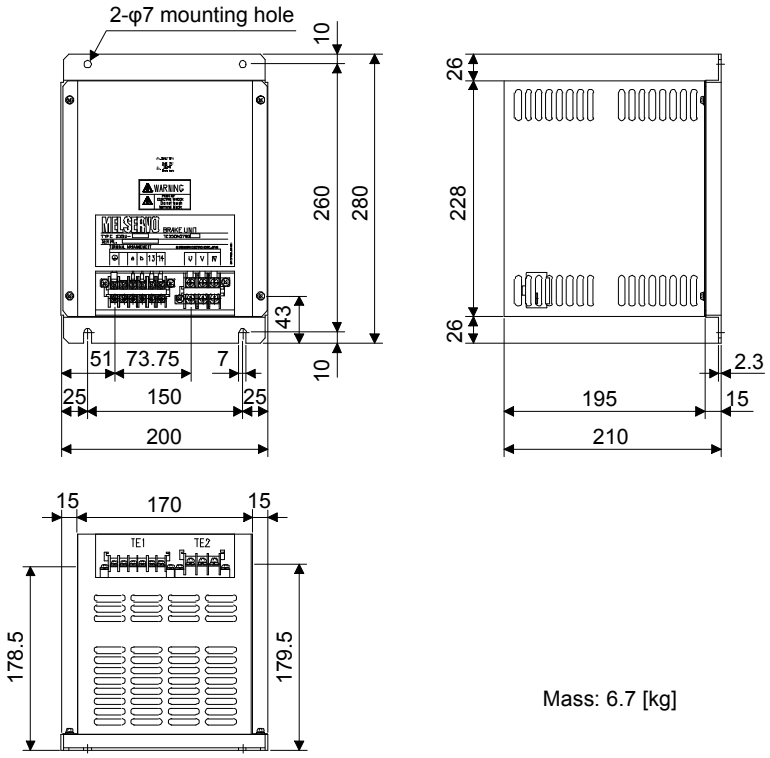

Mass: 6.7 [kg]

Terminal block

TE1

⏚		a	b	13	14

Screw: M3.5
Tightening torque: 0.8 [N•m]

TE2

U	V	W

Screw: M4
Tightening torque: 1.2 [N•m]

External dynamic brake	(Note) Connection wire [mm²]	
	U/V/W	Except U/V/W
DBU-11K-4	5.5 (AWG 10)	2 (AWG 14)
DBU-22K-4	5.5 (AWG 10)	2 (AWG 14)

Note. Selection conditions of wire size are as follows.
Wire type: 600 V grade heat-resistant polyvinyl chloride insulated wire (HIV wire)
Construction condition: Single wire set in midair

11.18 Panel through attachment (MR-J4ACN15K/MR-J3ACN)

Use the panel through attachment to mount the heat generation area of the servo amplifier in the outside of the cabinet to dissipate servo amplifier-generated heat to the outside of the cabinet and reduce the amount of heat generated in the cabinet. In addition, designing a compact cabinet is allowed.
In the cabinet, machine a hole having the panel cut dimensions, fit the panel through attachment to the servo amplifier with the fitting screws (4 screws supplied), and install the servo amplifier to the cabinet.
Please prepare screws for mounting. They do not come with.
The environment outside the cabinet when using the panel through attachment should be within the range of the servo amplifier operating environment.
The panel through attachment are used for MR-J4-11KTM to MR-J4-22KTM and MR-J4-11KTM4 to MR-J4-22KTM4.
The following shows the combinations.

Servo amplifier	Panel through attachment
MR-J4-11KTM MR-J4-15KTM	MR-J4ACN15K
MR-J4-22KTM	MR-J3ACN
MR-J4-11KTM4 MR-J4-15KTM4	MR-J4ACN15K
MR-J4-22KTM4	MR-J3ACN

(1) MR-J4ACN15K

(a) Panel cut dimensions

[Unit: mm]

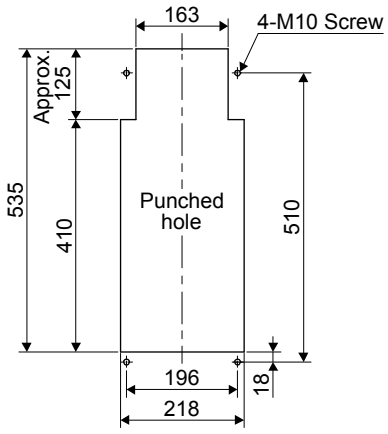

(b) How to assemble the attachment for panel through attachment

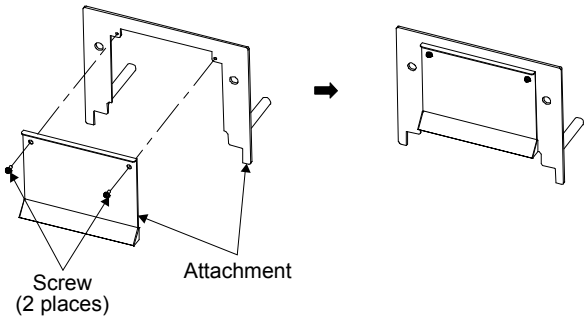

(c) Mounting method

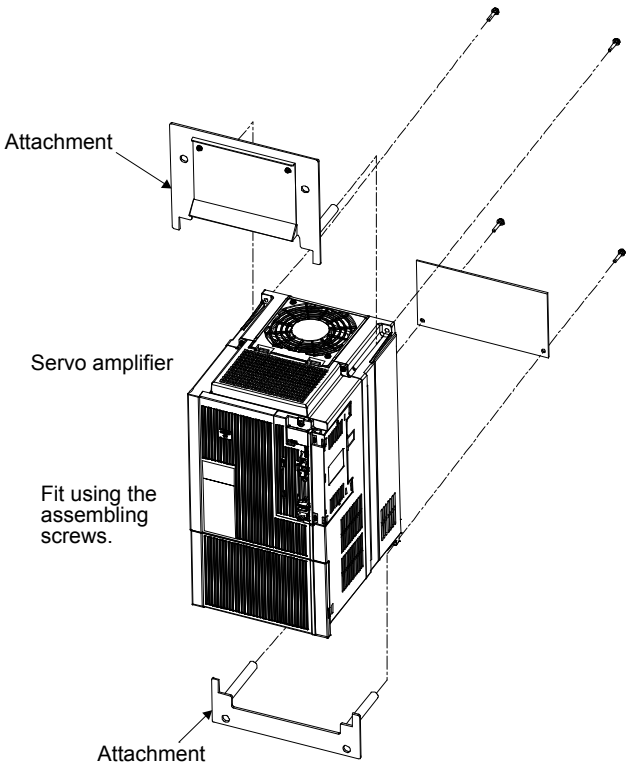

a. Assembling the panel through attachment

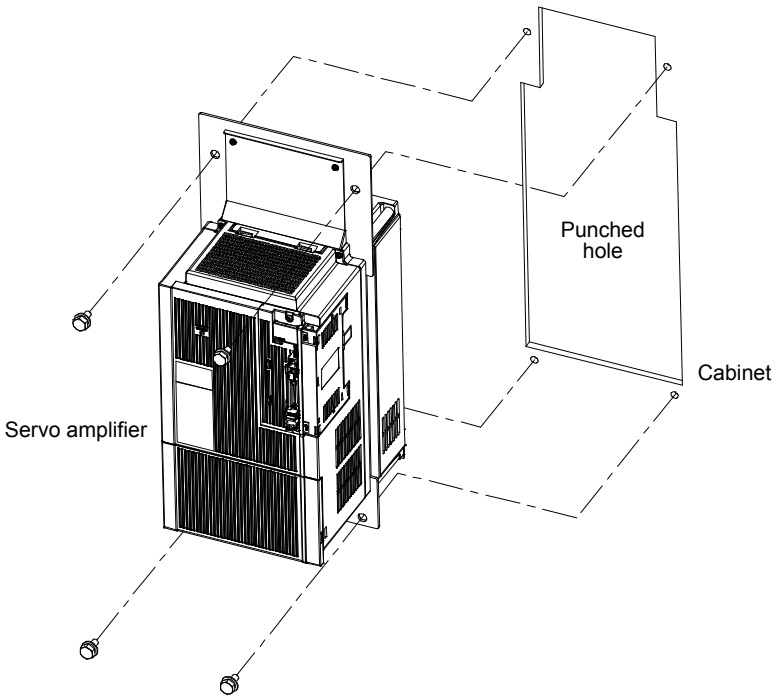

b. Mounting it to inside cabinet

(d) Mounting dimensional diagram

[Unit: mm]

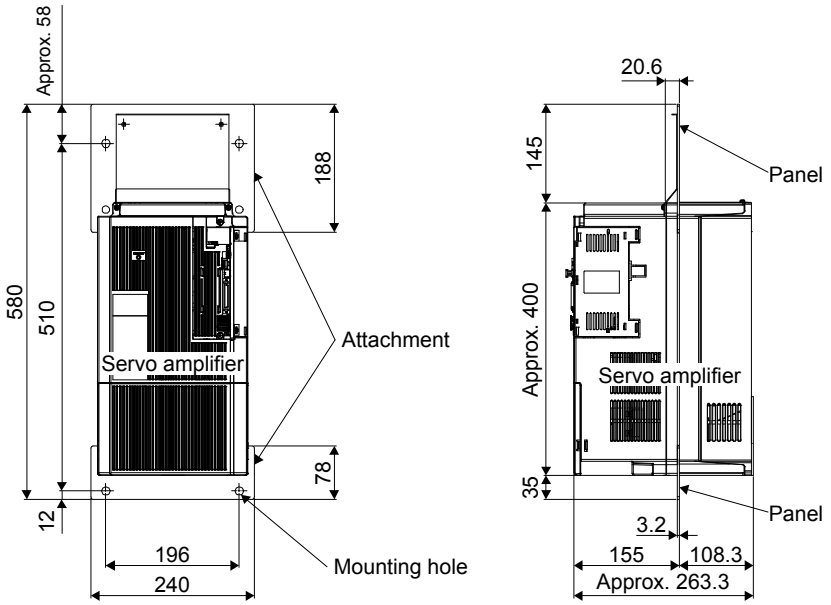

(2) MR-J3ACN

(a) Panel cut dimensions

[Unit: mm]

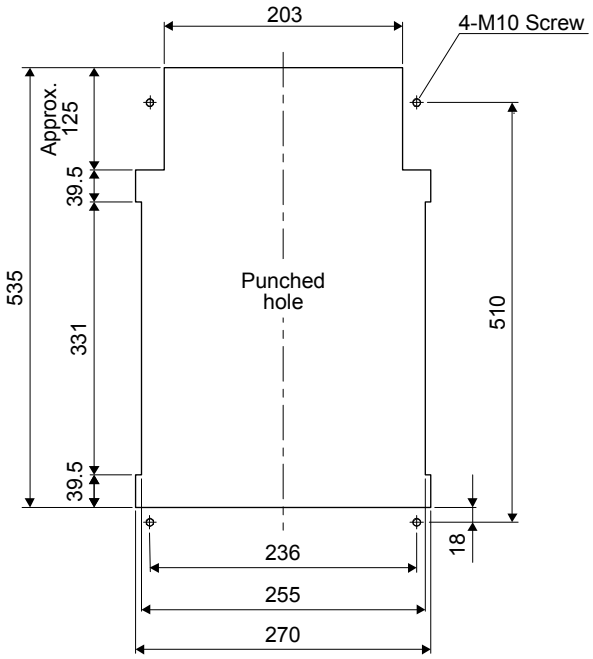

(b) How to assemble the attachment for panel through attachment

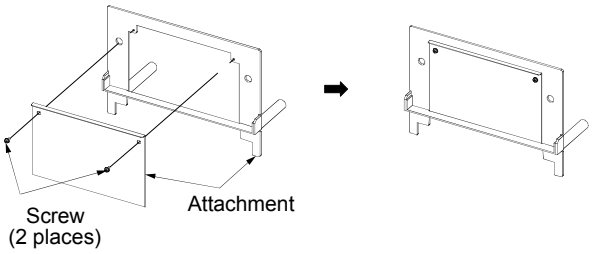

(c) Mounting method

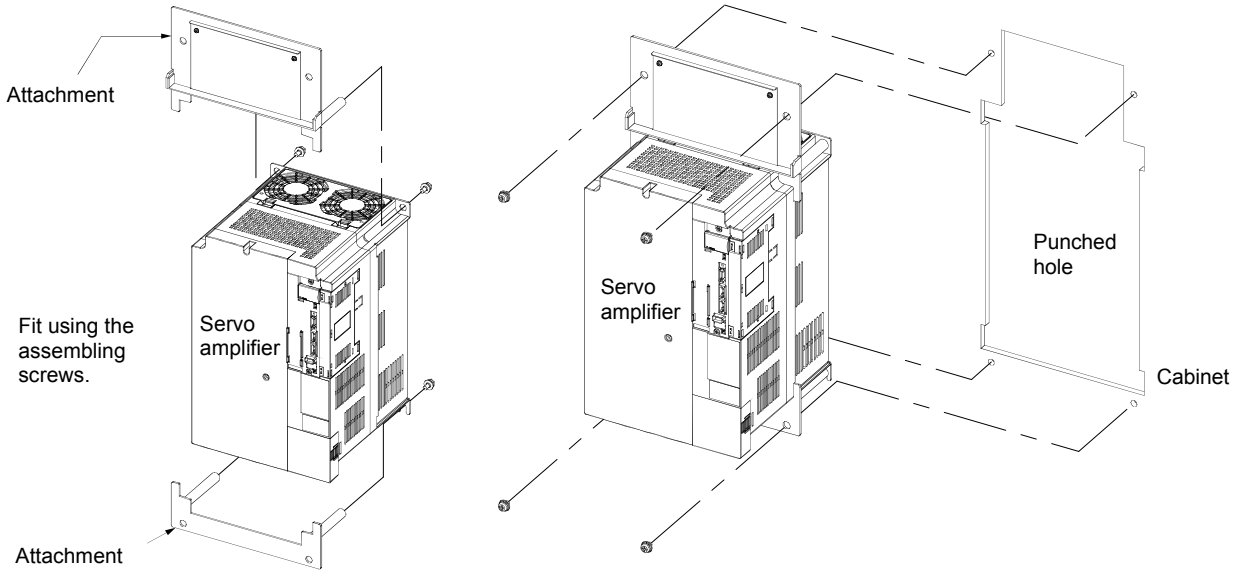

a. Assembling the panel through attachment

b. Mounting it to inside cabinet

(d) Mounting dimensional diagram

[Unit: mm]

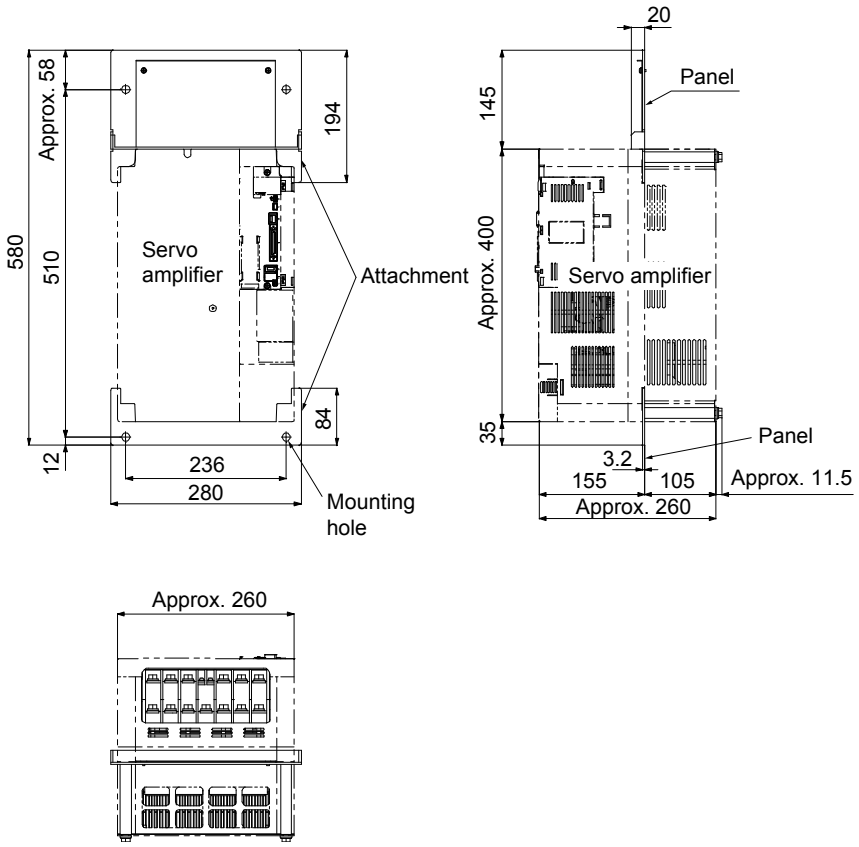

12. ABSOLUTE POSITION DETECTION SYSTEM

⚠CAUTION

- If [AL. 25 Absolute position erased] or [AL. E3 Absolute position counter warning] has occurred, always perform home position setting again. Otherwise, it may cause an unexpected operation.
- If [AL. 25], [AL. 92], or [AL. 9F] occurs due to such as short circuit of the battery, the MR-BAT6V1 battery can become hot. Use the MR-BAT6V1 battery with case to prevent getting burnt.

POINT

- Refer to section 11.8 for the replacement procedure of the battery.
- For configuring the absolute position detection system, there are three batteries of MR-BAT6V1SET-A, MR-BAT6V1BJ and MR-BT6VCASE. Compared with other batteries, MR-BAT6V1BJ has the following advantages.
  - You can disconnect the encoder cable from the servo amplifier.
  - You can change the battery with the control circuit power supply off.
- When absolute position data is erased from the encoder, always execute home position setting before operation. The absolute position data of the encoder will be erased in the followings. Additionally, when the battery is used out of specification, the absolute position data can be erased.
  When the MR-BAT6V1SET-A and MR-BT6VCASE are used
  - The encoder cable was disconnected.
  - The battery was replaced when the control circuit power supply was off.

  When the MR-BAT6V1BJ is used
  - A connector or cable was disconnected between the servo motor and battery.
  - The battery was replaced with procedures other than those of (6) in section 11.8.3.

12.1 Summary

12.1.1 Features

For normal operation, the encoder consists of a detector designed to detect a position within one revolution and a cumulative revolution counter designed to detect the number of revolutions.
The absolute position detection system always detects the absolute position of the machine and keeps it battery-backed, independently of whether the controller power is on or off. Therefore, once home position return is made at the time of machine installation, home position return is not needed when power is switched on thereafter.
Even at a power failure or a malfunction, the system can be easily restored.

12.1.2 Structure

The following shows a configuration of the absolute position detection system. Refer to section 11.8 for each battery connection.

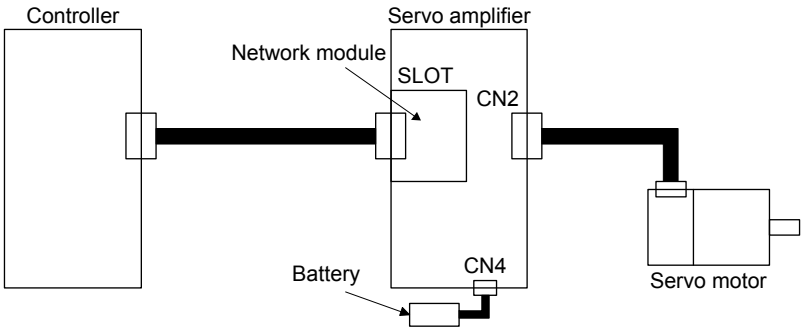

12.1.3 Parameter setting

Set "_ _ _ 1" in [Pr. PA03] to enable the absolute position detection system.

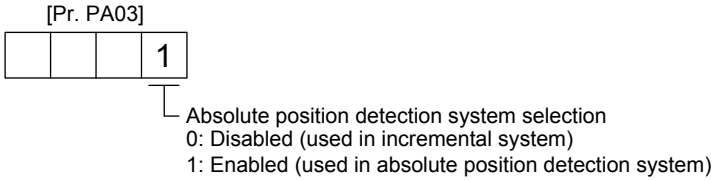

12.1.4 Confirmation of absolute position detection data

You can check the absolute position data with MR Configurator2. Choose "Monitor" and "ABS Data Display" to open the absolute position data display screen.

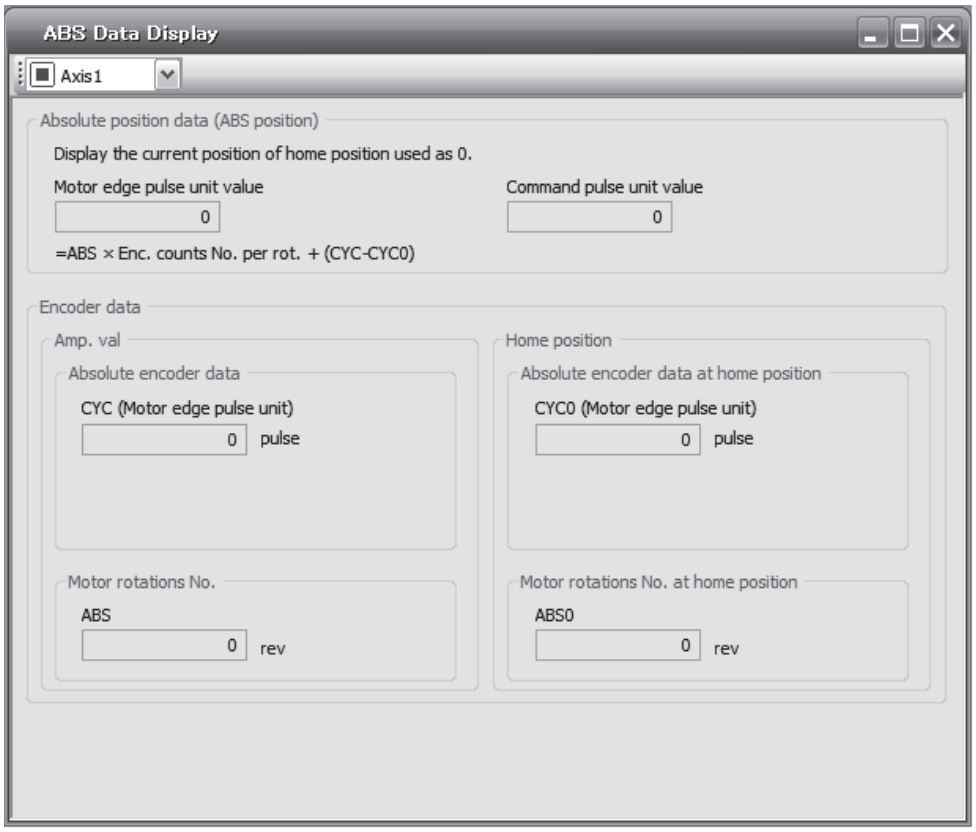

12.2 Battery

12.2.1 Using MR-BAT6V1SET-A battery

(1) Configuration diagram

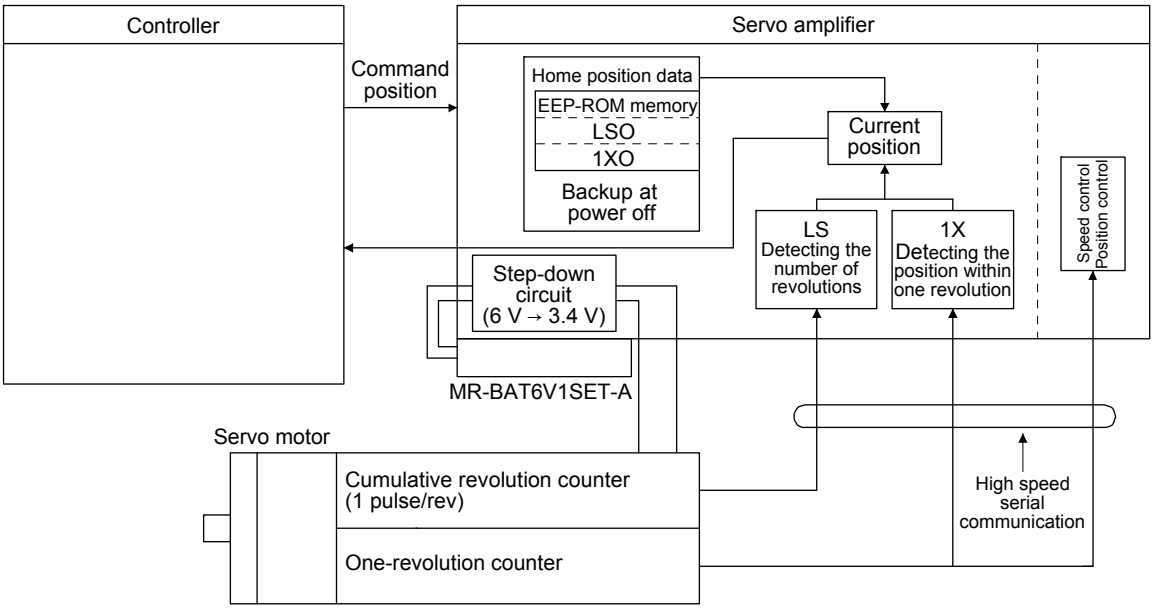

(2) Specifications

(a) Specification list

Item		Description
System		Electronic battery backup type
Maximum revolution range		Home position ± 32767 rev.
(Note 1) Maximum speed at power failure [r/min]	Rotary servo motor	6000 (only when acceleration time until 6000 r/min is 0.2 s or more)
	Direct drive motor	500 (only when acceleration time until 500 r/min is 0.1 s or more)
(Note 2) Battery backup time	Rotary servo motor	Approximately 20,000 hours (equipment power supply: off, ambient temperature: 20 ˚C) Approximately 29,000 hours (power-on time ratio: 25%, ambient temperature: 20 °C) (Note 3)
	Direct drive motor	Approximately 5,000 hours (equipment power supply: off, ambient temperature: 20 ˚C) Approximately 15,000 hours (power-on time ratio: 25%, ambient temperature: 20 °C) (Note 3)

Note 1. Maximum speed available when the shaft is rotated by external force at the time of power failure or the like. Also, if power is switched on at the servo motor speed of 3000 r/min or higher, position mismatch may occur due to external force or the like.

2. The data-holding time by the battery using MR-BAT6V1SET-A. Replace the batteries within three years since the operation start regardless of the power supply of the servo amplifier on/off. If the battery is used out of specification, [AL. 25 Absolute position erased] may occur.

3. The power-on time ratio 25% is equivalent to 8 hours power on for a weekday and off for a weekend.

12.2.2 Using MR-BAT6V1BJ battery for junction battery cable

POINT

- MR-BAT6V1BJ is compatible only with HG series servo motors. It cannot be used with direct drive motors.
- MR-BAT6V1BJ cannot be used for fully closed loop system and scale measurement function.

(1) Configuration diagram

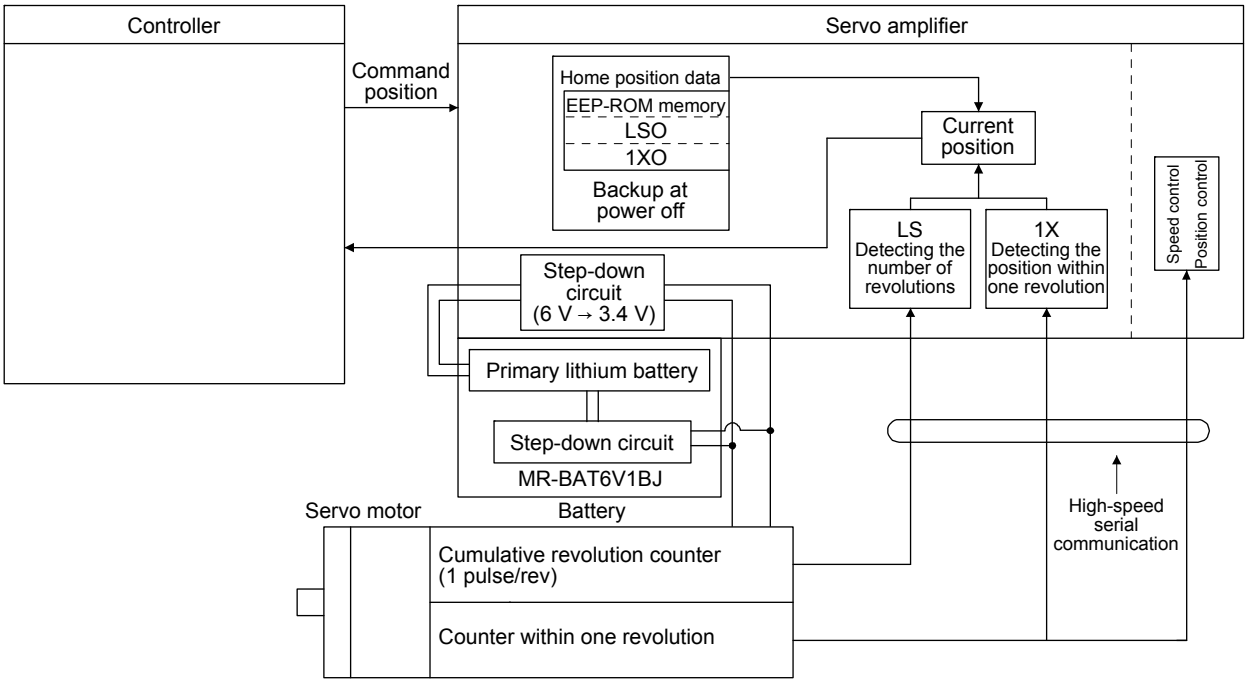

(2) Specifications

(a) Specification list

Item		Description
System		Electronic battery backup type
Maximum revolution range		Home position ± 32767 rev.
(Note 1) Maximum speed at power failure [r/min]	Rotary servo motor	6000 (only when acceleration time until 6000 r/min is 0.2 s or more)
(Note 2) Battery backup time	Rotary servo motor	Approximately 20,000 hours (equipment power supply: off, ambient temperature: 20 °C) Approximately 29,000 hours (power-on time ratio: 25%, ambient temperature: 20 °C) (Note 3)

Note 1. Maximum speed available when the shaft is rotated by external force at the time of power failure or the like. Also, if power is switched on at the servo motor speed of 3000 r/min or higher, position mismatch may occur due to external force or the like.

2. The data-holding time by the battery using MR-BAT6V1BJ. Replace the batteries within three years since the operation start regardless of the power supply of the servo amplifier on/off. If the battery is used out of specification, [AL. 25 Absolute position erased] may occur.

3. The power-on time ratio 25% is equivalent to 8 hours power on for a weekday and off for a weekend.

12.2.3 Using MR-BT6VCASE battery case

POINT
●One MR-BT6VCASE holds absolute position data up to eight axes servo motors. ●Always install five MR-BAT6V1 batteries to an MR-BT6VCASE.

(1) Configuration diagram

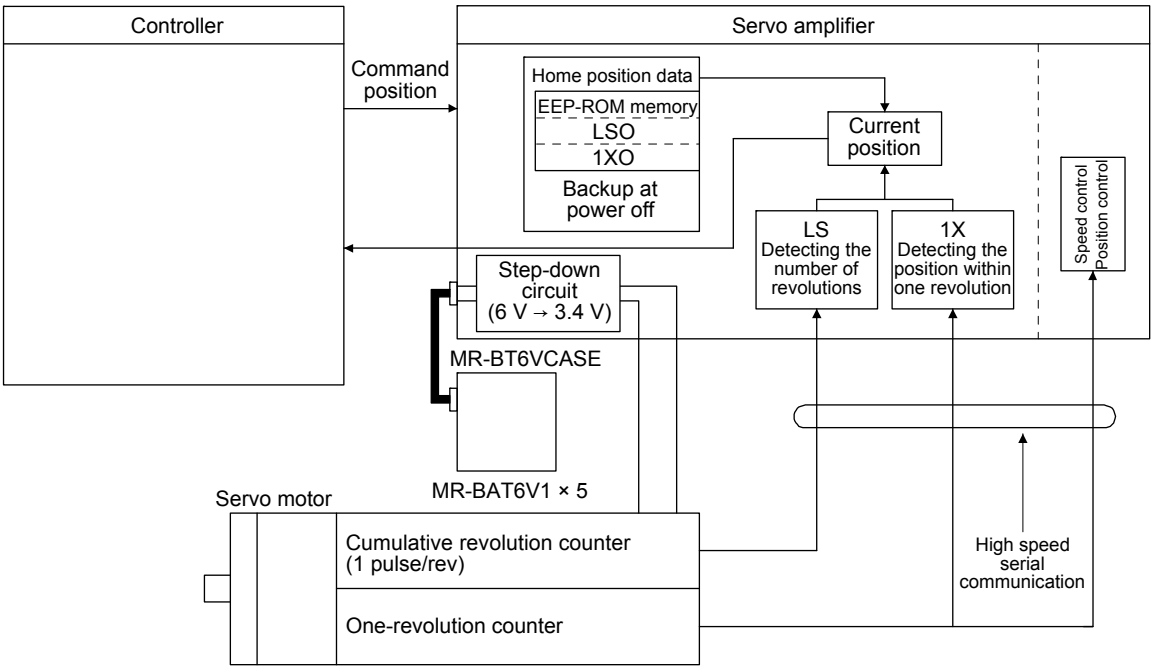

(2) Specification list

Item		Description
System		Electronic battery backup type
Maximum revolution range		Home position ± 32767 rev.
(Note 1) Maximum speed at power failure [r/min]	Rotary servo motor	6000 (only when acceleration time until 6000 r/min is 0.2 s or more)
	Direct drive motor	500 (only when acceleration time until 500 r/min is 0.1 s or more)
(Note 2) Battery backup time	Rotary servo motor	Approximately 40,000 hours/2 axes or less, 30,000 hours/3 axes, or 10,000 hours/8 axes (equipment power supply: off, ambient temperature: 20 °C) Approximately 55,000 hours/2 axes or less, 38,000 hours/3 axes, or 15,000 hours/8 axes (power-on time ratio: 25%, ambient temperature: 20 °C) (Note 3)
	Direct drive motor	Approximately 10,000 hours/2 axes or less, 7,000 hours/3 axes, or 5,000 hours/4 axes (equipment power supply: off, ambient temperature: 20 °C) Approximately 15,000 hours/2 axes or less, 13,000 hours/3 axes, or 10,000 hours/4 axes (power-on time ratio: 25%, ambient temperature: 20 °C) (Note 3)

Note 1. Maximum speed available when the shaft is rotated by external force at the time of power failure or the like. Also, if power is switched on at the servo motor speed of 3000 r/min or higher, position mismatch may occur due to external force or the like.
2. The data-holding time by the battery using five MR-BAT6V1s. The battery life varies depending on the number of axes (including axis for using in the incremental system). Replace the batteries within three years since the operation start regardless of the power supply of the servo amplifier on/off. If the battery is used out of specification, [AL. 25 Absolute position erased] may occur.
3. The power-on time ratio 25% is equivalent to 8 hours power on for a weekday and off for a weekend.

MEMO

13. USING STO FUNCTION

POINT
●In the torque mode, the forced stop deceleration function is not available.

13.1 Introduction

This section provides the cautions of the STO function.

13.1.1 Summary

This servo amplifier complies with the following safety standards.

- ISO/EN ISO 13849-1 Category 3 PL e
- IEC 61508 SIL 3
- IEC/EN 61800-5-2
- IEC/EN 62061 SIL CL3

13.1.2 Terms related to safety

The STO function shuts down energy to servo motors, thus removing torque. This function electronically cuts off power supply in the servo amplifier.
The purpose of this function is as follows.

(1) Uncontrolled stop according to stop category 0 of IEC/EN 60204-1

(2) Preventing unexpected start-up

13.1.3 Cautions

The following basic safety notes must be read carefully and fully in order to prevent injury to persons or damage to property.
Only qualified personnel are authorized to install, start-up, repair, or service the machines in which these components are installed.
They must be familiar with all applicable local regulations and laws in which machines with these components are installed, particularly the standards mentioned in this manual.
The staff responsible for this work must be given express permission from the company to perform start-up, programming, configuration, and maintenance of the machine in accordance with the safety standards.

⚠WARNING	●Improper installation of the safety related components or systems may cause improper operation in which safety is not assured, and may result in severe injuries or even death.

Protective Measures

- This servo amplifier satisfies the Safe Torque Off (STO) function described in IEC/EN 61800-5-2 by preventing the energy supply from the servo amplifier to the servo motor. If an external force acts upon the drive axis, additional safety measures, such as brakes or counterbalances must be used.

13.1.4 Residual risks of the STO function

Machine manufacturers are responsible for all risk evaluations and all associated residual risks. Below are residual risks associated with the STO function. Mitsubishi Electric is not liable for any damages or injuries caused by these risks.

(1) The STO function disables energy supply to the servo motor by electrical shut-off. The function does not mechanically disconnect electricity from the motor. Therefore, it cannot prevent exposure to electric shock. To prevent an electric shock, install a magnetic contactor or a molded-case circuit breaker to the main circuit power supply (L1/L2/L3) of the servo amplifier.

(2) The STO function disables energy supply to the servo motor by electrical shut-off. It does not guarantee the stop control or the deceleration control of the servo motor.

(3) For proper installation, wiring, and adjustment, thoroughly read the manual of each individual safety related component.

(4) In the safety circuit, use components that are confirmed safe or meet the required safety standards.

(5) The STO function does not guarantee that the drive part of the servo motor will not rotate due to external or other forces.

(6) Safety is not assured until safety-related components of the system are completely installed or adjusted.

(7) When replacing this servo amplifier, confirm that the model name of servo amplifiers are exactly the same as those being replaced. Once installed, make sure to verify the performance of the functions before commissioning the system.

(8) Perform all risk assessments to the machine or the whole system.

(9) To prevent accumulation of malfunctions, perform malfunction checks at regular intervals based on the risk assessments of the machine or the system. Regardless of the system safety level, malfunction checks should be performed at least once per year.

(10) If the upper and lower power module in the servo amplifier are shorted and damaged simultaneously, the servo motor may make a half revolution at a maximum. For a linear servo motor, the primary side will move a distance of pole pitch.

(11) The STO input signals (STO1 and STO2) must be supplied from one power source. Otherwise, the STO function may not function properly due to a sneak current, failing to bring the STO shut-off state.

(12) For the STO I/O signals of the STO function, supply power by using a safety extra low voltage (SELV) power supply with the reinforced insulation.

13.1.5 Specifications

(1) Specifications

Item	Specifications
Functional safety	STO (IEC/EN 61800-5-2)
Safety performance (Note 2)	ISO/EN ISO 13849-1 Category 3 PL e, IEC 61508 SIL 3, EN 62061 SIL CL3, EN 61800-5-2
Mean time to dangerous failure (MTTFd)	MTTFd ≥ 100 [years] (314a) (Note 1)
Diagnostic converge (DC)	DC = Medium, 97.6 [%] (Note 1)
Average probability of dangerous failures per hour (PFH)	PFH = 6.4 × 10^{-9} [1/h]
Number of on/off times of STO	1,000,000 times
CE marking	LVD: EN 61800-5-1 EMC: EN 61800-3 MD: EN ISO 13849-1, EN 61800-5-2, EN 62061

Note 1. This is the value required by safety standards.
2. The safety level depends on the setting value of [Pr. PF18 STO diagnosis error detection time] and whether STO input diagnosis by TOFB output is performed or not. For details, refer to the Function column of [Pr. PF18] in section 5.2.6.

(2) Function block diagram (STO function)

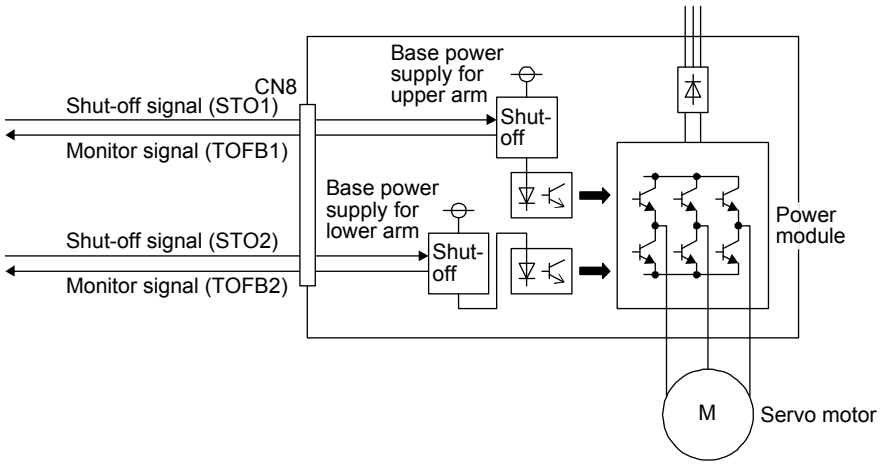

(3) Operation sequence (STO function)

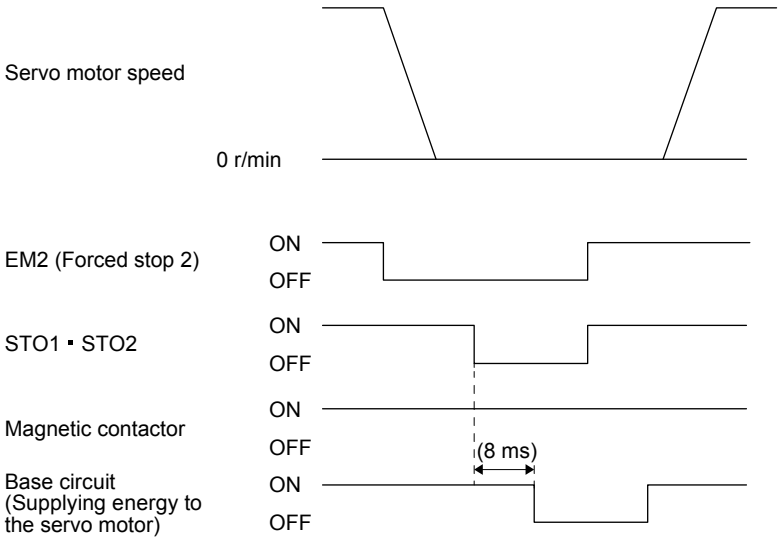

13.1.6 Maintenance

This servo amplifier has alarms and warnings for maintenance that supports the Drive safety function. (Refer to chapter 8.)

13.2 STO I/O signal connector (CN8) and signal layouts

13.2.1 Signal layouts

POINT
●The pin assignment of the connectors is as viewed from the cable connector wiring section.

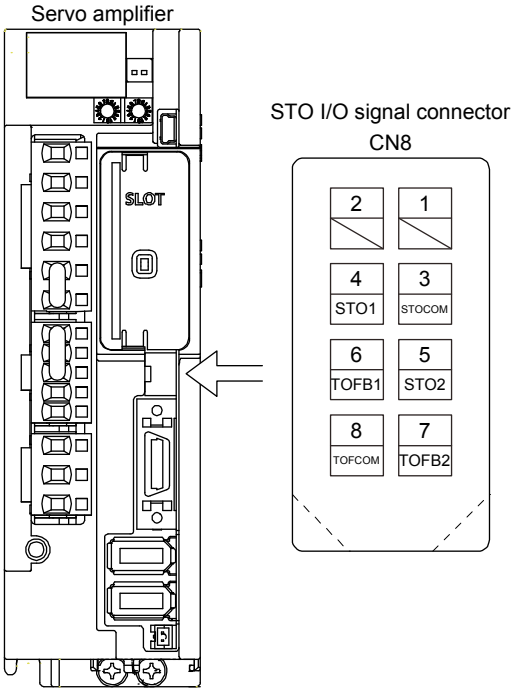

13.2.2 Signal (device) explanations

(1) I/O device

Signal name	Connector pin No.	Description	I/O division
STOCOM	CN8-3	Common terminal for input signal of STO1 and STO2	DI-1
STO1	CN8-4	Inputs STO state 1. STO state (base shut-off): Open between STO1 and STOCOM. STO release state (in driving): Close between STO1 and STOCOM. Be sure to turn off STO1 after the servo motor stops by the servo-off state or with forced stop deceleration by turning off EM2 (Forced stop 2).	DI-1
STO2	CN8-5	Inputs STO state 2. STO state (base shut-off): Open between STO2 and STOCOM. STO release state (in driving): Close between STO2 and STOCOM. Be sure to turn off STO2 after the servo motor stops by the servo-off state or with forced stop deceleration by turning off EM2 (Forced stop 2).	DI-1
TOFCOM	CN8-8	Common terminal for monitor output signal in STO state	DO-1
TOFB1	CN8-6	Monitor output signal in STO1 state STO state (base shut-off): Between TOFB1 and TOFCOM is closed. STO release state (in driving): Between TOFB1 and TOFCOM is opened.	DO-1
TOFB2	CN8-7	Monitor output signal in STO2 state STO state (base shut-off): Between TOFB2 and TOFCOM is closed. STO release state (in driving): Between TOFB2 and TOFCOM is opened.	DO-1

(2) Signals and STO state

The following table shows the TOFB and STO states when the power is on in normal state and STO1 and STO2 are on (closed) or off (opened).

Input signal		State		
STO1	STO2	Between TOFB1 and TOFCOM (Monitoring STO1 state)	Between TOFB2 and TOFCOM (Monitoring STO2 state)	Between TOFB1 and TOFB2 (Monitoring STO state of servo amplifier)
Off	Off	On: STO state (base circuit shut-off)	On: STO state (base circuit shut-off)	On: STO state (base circuit shut-off)
Off	On	On: STO state (base circuit shut-off)	Off: STO release state	Off: STO state (base circuit shut-off)
On	Off	Off: STO release state	On: STO state (base circuit shut-off)	Off: STO state (base circuit shut-off)
On	On	Off: STO release state	Off: STO release state	Off: STO release state

(3) Test pulse of STO input signal

Set the test pulse off time inputted from outside to 1 ms or less.

13.2.3 How to pull out the STO cable

The following shows how to pull out the STO cable from the CN8 connector of the servo amplifier.

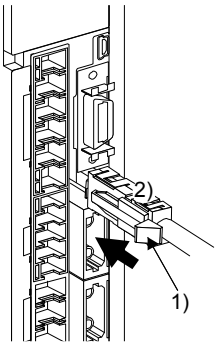

While pressing knob 1) of the STO cable plug in the direction of the arrow, pull out the plug 2).

13.3 Connection example

POINT

- Turn off STO (STO1 and STO2) after the servo motor stops by the servo off state or with forced stop deceleration by turning off EM2 (Forced stop 2). Configure an external sequence that has the timings shown as below using an external device such as the MR-J3-D05 safety logic unit.

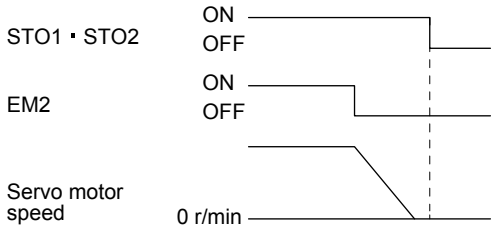

- If STO is turned off during operation, the servo motor is in dynamic brake stop (stop category 0), and [AL. 63 STO timing error] will occur.

13.3.1 Connection example for CN8 connector

This servo amplifier is equipped with the connector (CN8) in accordance with the STO function. When this connector is used with a certified external safety relay, power to the motor can be safely removed and unexpected restart can be prevented. The safety relay used should meet the applicable safety standards and have forcibly guided or mirror contacts for the purpose of error detection.
In addition, the MR-J3-D05 safety logic unit can be used instead of a safety relay for implementation of various safety standards. Refer to app. 5 for details.
The following diagram is for source interface. For sink interface, refer to section 13.4.1.

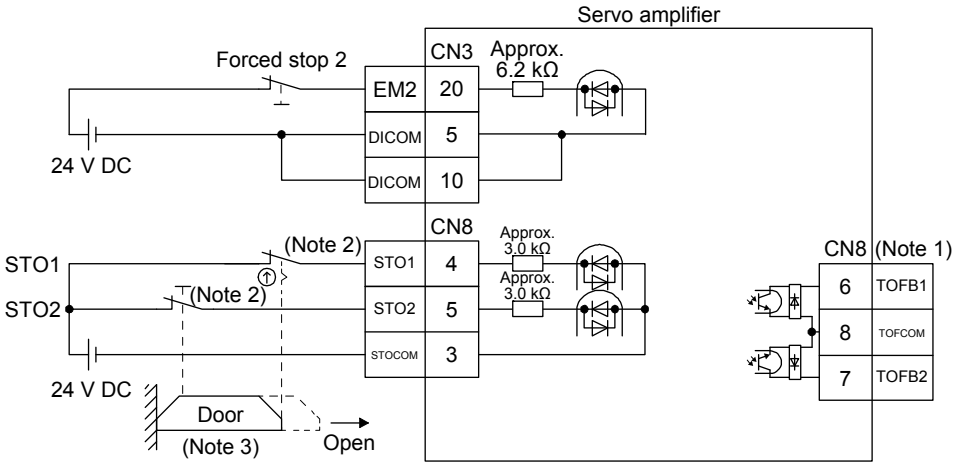

Note 1. By using TOFB, whether the servo is in the STO state can be confirmed. For connection examples, refer to section 13.3.2 and 13.3.3. The safety level depends on the setting value of [Pr. PF18 STO diagnosis error detection time] and whether STO input diagnosis by TOFB output is performed or not. For details, refer to the Function column of [Pr. PF18] in section 5.2.6.

2. When using the STO function, turn off STO1 and STO2 at the same time. Turn off STO1 and STO2 after the servo motor stops by the servo off state or with forced stop deceleration by turning off EM2 (Forced stop 2).

3. Configure the interlock circuit so that the door is open after the servo motor is stopped.

13.3.2 External I/O signal connection example using an MR-J3-D05 safety logic unit

POINT
●This connection is for source interface. For the other I/O signals, refer to the connection examples in section 3.2.2.

(1) Connection example

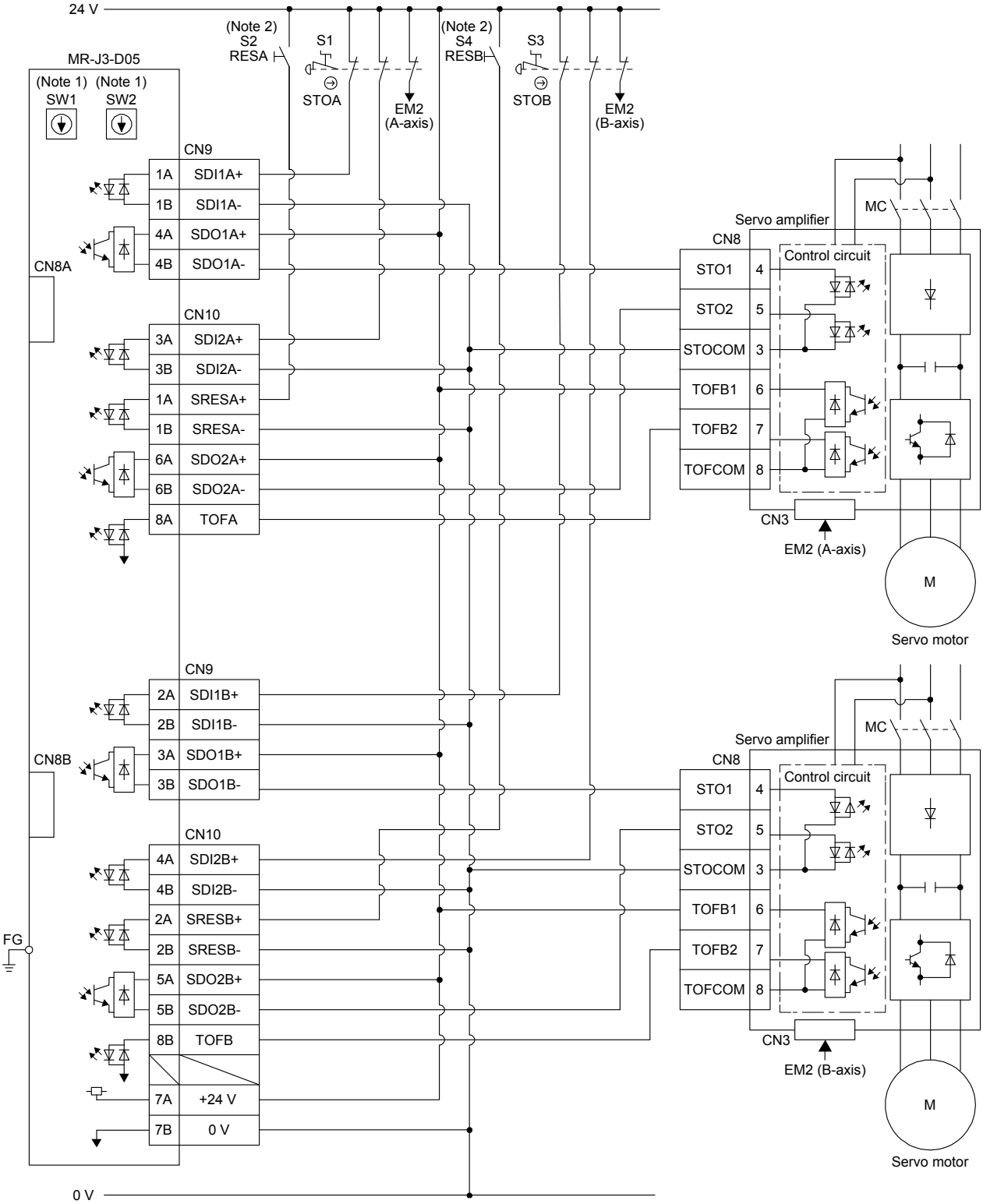

Note 1. Set the delay time of STO output with SW1 and SW2. These switches are located where dented from the front panel.
2. To release the STO state (base circuit shut-off), turn RESA and RESB on and turn them off.

(2) Basic operation example

The switch status of STOA is input to SDI2A+ of MR-J3-D05, and then it will be input to STO1 and STO2 of the servo amplifier via SDO1A and SDO2A of MR-J3-D05.

The switch status of STOB is input to SDI2B+ of MR-J3-D05, and then it will be input to STO1 and STO2 of the servo amplifier via SDO1B and SDO2B of MR-J3-D05.

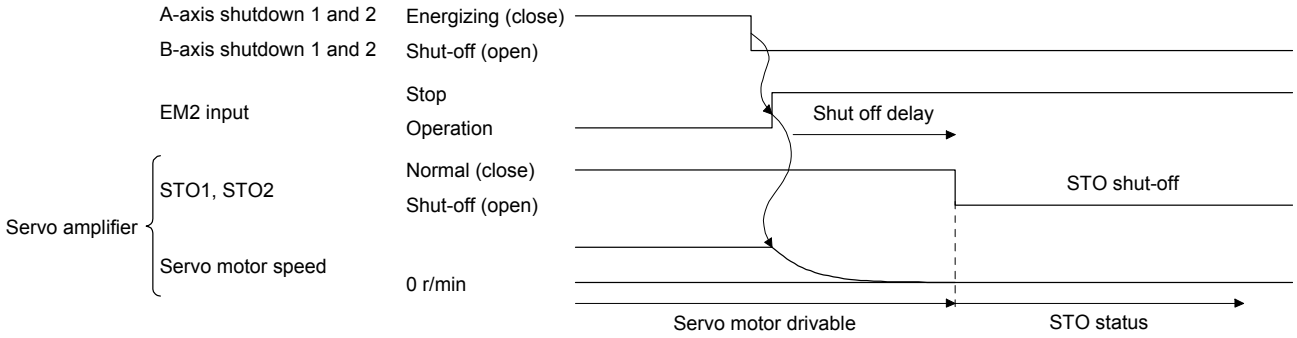

13.3.3 External I/O signal connection example using an external safety relay unit

POINT
●This connection is for source interface. For the other I/O signals, refer to the connection examples in section 3.2.2.

This connection example complies with the requirement of ISO/EN ISO 13849-1 Category 3 PL d.
For details, refer to the safety relay module user's manual.

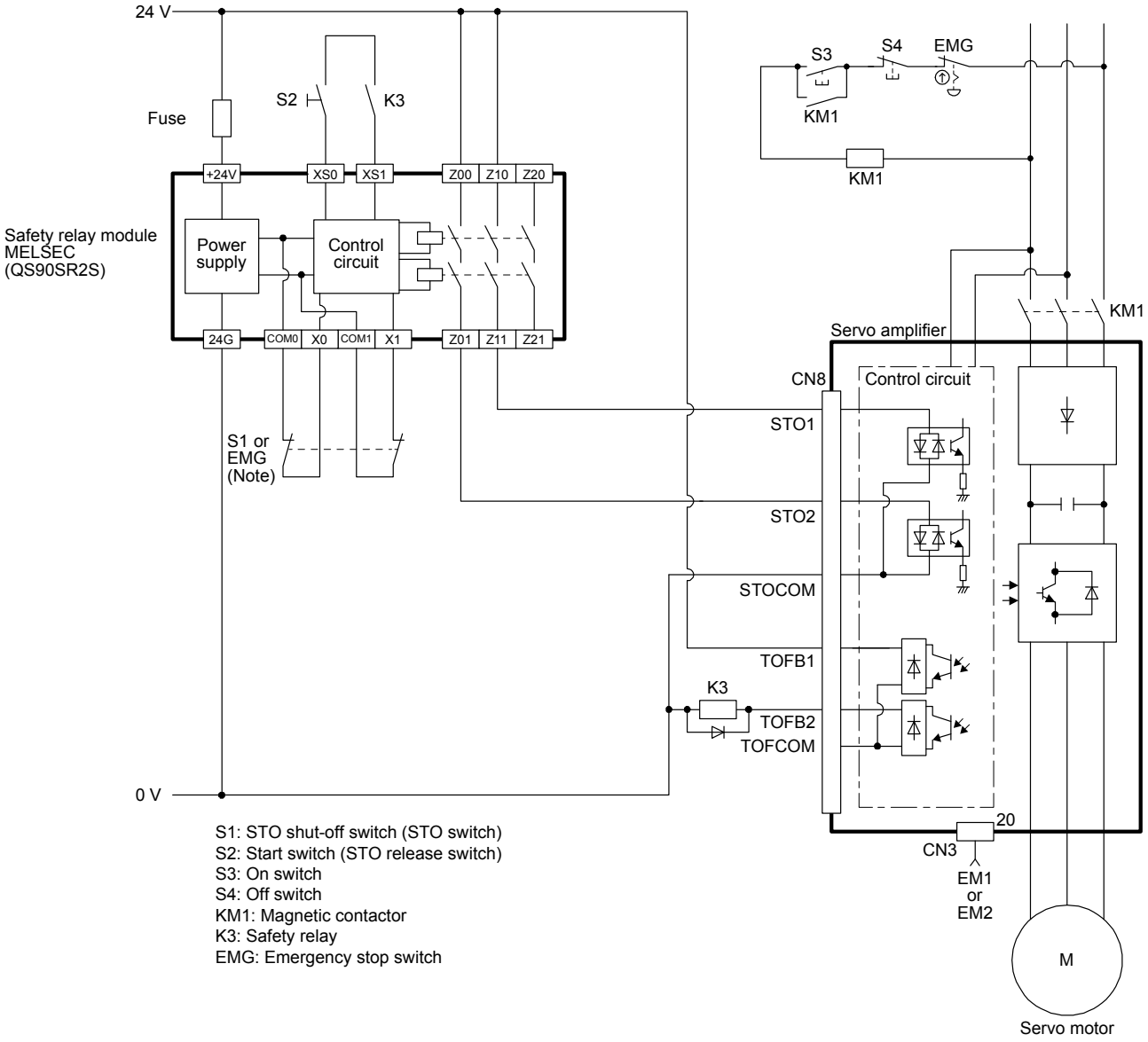

Note. To enable the STO function of the servo amplifier by using "Emergency switching off", change S1 to EMG. The stop category at this time is "0". If STO is turned off while the servo motor is rotating, [AL. 63 STO timing error] will occur.

13.4 Detailed description of interfaces

This section provides the details of the I/O signal interfaces (refer to the I/O division in the table) given in section 13.2. Refer to this section and make connection with the external device.

13.4.1 Sink I/O interface

(1) Digital input interface DI-1
This is an input circuit whose photocoupler cathode side is input terminal. Transmit signals from sink (open-collector) type transistor output, relay switch, etc.

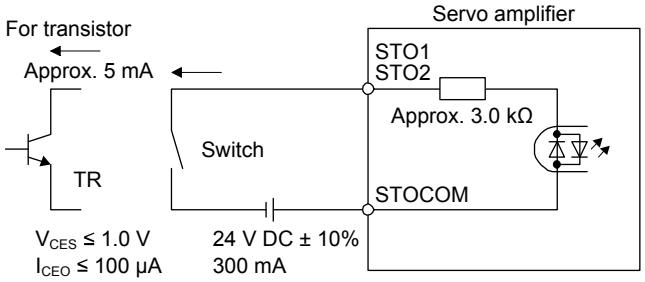

(2) Digital output interface DO-1
This is a circuit in which the collector of the output transistor is the output terminal. When the output transistor is turned on, the current will flow to the collector terminal.
A lamp, relay or photocoupler can be driven. Install a diode (D) for an inductive load, or install an inrush current suppressing resistor (R) for a lamp load.
(Rated current: 40 mA or less, maximum current: 50 mA or less, inrush current: 100 mA or less) A maximum of 5.2 V voltage drop occurs in the servo amplifier.

(a) When outputting two STO states by using each TOFB

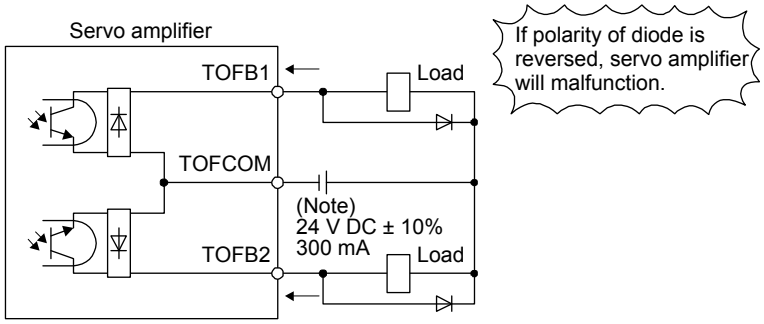

Note. If the voltage drop (maximum of 2.6 V) interferes with the relay operation, apply high voltage (maximum of 26.4 V) from external source.

(b) When outputting two STO states by using one TOFB

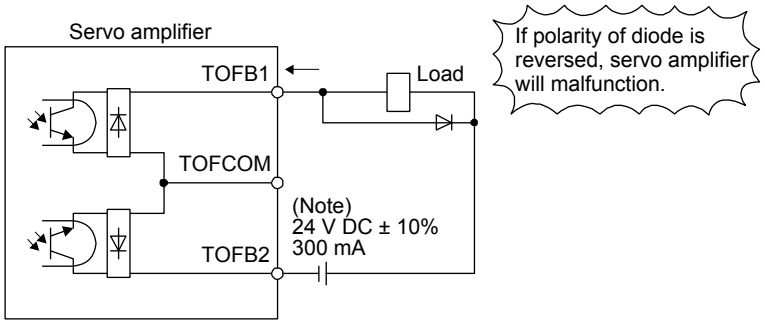

Note. If the voltage drop (maximum of 5.2 V) interferes with the relay operation, apply high voltage (maximum of 26.4 V) from external source.

13.4.2 Source I/O interface

In this servo amplifier, source type I/O interfaces can be used.

(1) Digital input interface DI-1
This is an input circuit whose photocoupler anode side is input terminal. Transmit signals from source (open-collector) type transistor output, relay switch, etc.

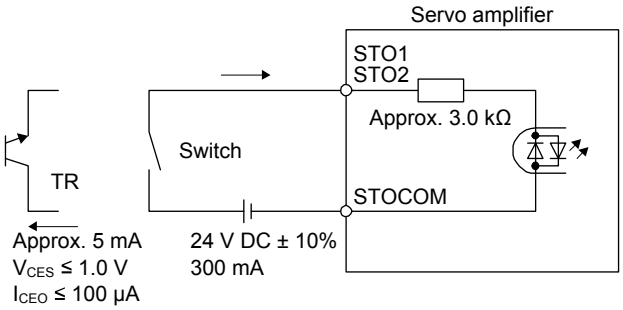

(2) Digital output interface DO-1
This is a circuit in which the emitter of the output transistor is the output terminal. When the output transistor is turned on, the current will flow from the output terminal to a load.
A maximum of 5.2 V voltage drop occurs in the servo amplifier.

(a) When outputting two STO states by using each TOFB

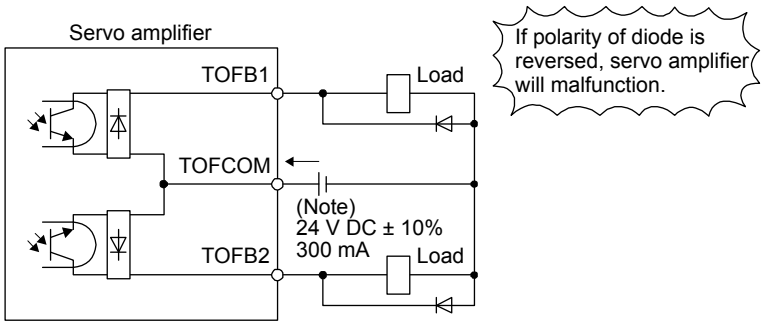

Note. If the voltage drop (maximum of 2.6 V) interferes with the relay operation, apply high voltage (maximum of 26.4 V) from external source.

(b) When outputting two STO states by using one TOFB

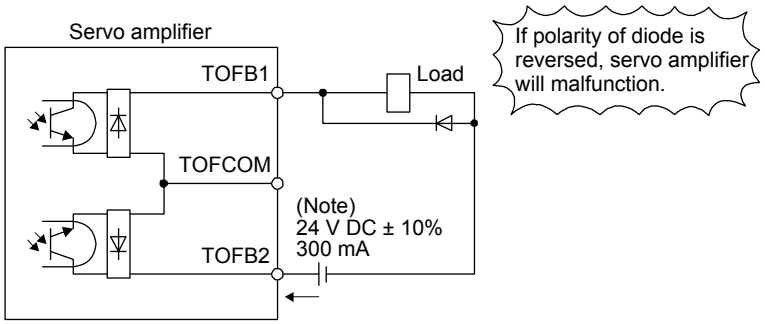

Note. If the voltage drop (maximum of 5.2 V) interferes with the relay operation, apply high voltage (maximum of 26.4 V) from external source.

14. USING A LINEAR SERVO MOTOR

⚠WARNING ●When using the linear servo motor, read "Linear Servo Motor Instruction Manual" and "Linear Encoder Instruction Manual".

14.1 Functions and configuration

14.1.1 Summary

The fields of semiconductor/LCD manufacturing systems, mounters, and others have strong demands for high accuracy, high speed, and efficiency. Therefore, the number of systems using a linear servo motor for a drive axis has been increasing. Since the linear servo system can obtain the characteristics of the high speed and the high acceleration/deceleration greater than the ball screw drive system. The linear servo system also does not have a ball screw wear which is a weak point in the ball screw drive system. This will extend the life of the equipment. In addition, since a response error due to backlash and friction does not occur, you can establish a high-accuracy system.
The following shows the differences between the linear servo motor and the rotary servo motor.

Category	Item		Differences		Remark
			Linear servo motor	Rotary servo motor	
Motor pole adjustment	Magnetic pole detection		Required	Not required (default setting)	Automatically executed at the first servo-on after the power is turned on. For the absolute position linear encoder, [Pr. PL01] can disable the magnetic pole detection. The timing of the magnetic pole detection can be changed with [Pr. PL01]. (Refer to (2) (b) of section 14.3.3.)
Home position return	Reference home position		1048576 pulses unit (initial value)	One servo motor revolution unit	Home position return pitch can be changed with parameter setting. (Refer to section 14.3.3)
Absolute position detection system	Absolute position encoder battery		Not required	Required	The following alarms and warnings are not provided for the linear servo motor. ・[AL. 25 Absolute position erased] ・[AL. 92 Battery cable disconnection warning] ・[AL. 9F Battery warning] ・[AL. E3 Absolute position counter warning]
Auto tuning	Load to motor inertia ratio (J)		Load to motor mass ratio	Load to motor inertia ratio	
MR Configurator2 (SW1DNC-MRC2-_)	Motor speed (Data display and setting)		mm/s unit	r/min unit	
	Test operation	Positioning operation	Supported	Supported	
		Motor-less operation	None	Supported	
		JOG operation	None	Supported	
		Program operation	Supported	Supported	
		Single-step feed	Supported	Supported	

14.1.2 Servo system with auxiliary equipment

⚠CAUTION	●Connecting a linear servo motor for different axis to the U, V, W, or CN2 may cause a malfunction.

POINT

●Equipment other than the servo amplifier and linear servo motor are optional or recommended products.

●When using the linear servo motor, set [Pr. PA01] to "_ _ 4 _".

(1) When using serial linear encoder

The configuration diagram is an example of MR-J4-20TM. When using the other servo amplifiers, the configuration will be the same as rotary servo motors except for connections of linear servo motors and linear encoders. Refer to section 1.8 depending on servo amplifiers you use.

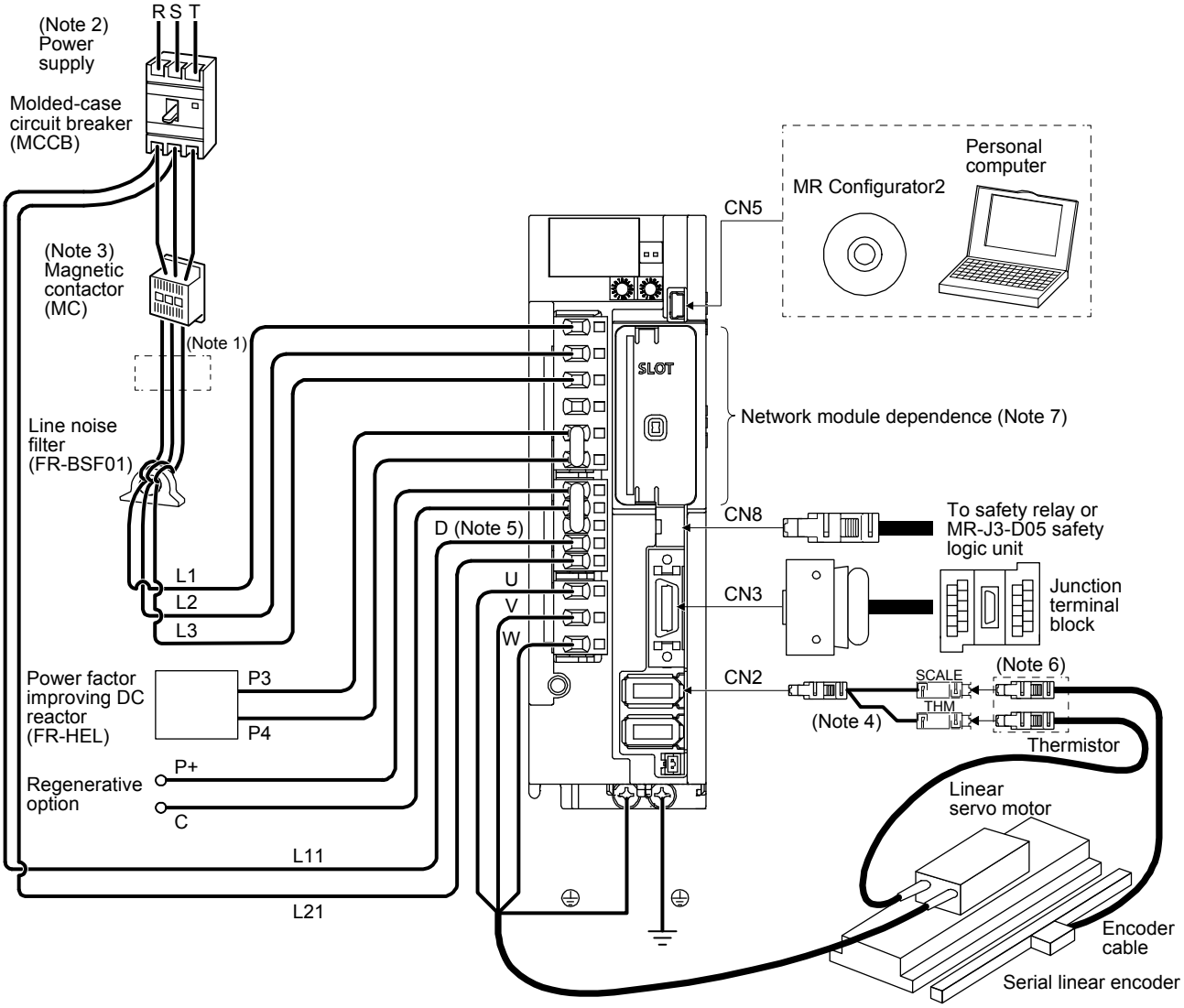

Note 1. The power factor improving AC reactor can also be used. In this case, the power factor improving DC reactor cannot be used. When not using the power factor improving DC reactor, short P3 and P4.
2. A 1-phase 200 V AC to 240 V AC power supply may be used with the servo amplifier of MR-J4-200TM or less. For 1-phase 200 V AC to 240 V AC, connect the power supply to L1 and L3. Leave L2 open. For power supply specifications, refer to section 1.3.
3. Depending on the main circuit voltage and operation pattern, bus voltage decreases, and that may cause the forced stop deceleration to shift to the dynamic brake deceleration. When dynamic brake deceleration is not required, slow the time to turn off the magnetic contactor.
4. For the branch cable, use the MR-J4THCBL03M (optional).
5. Always connect between P+ and D terminals. When using the regenerative option, refer to section 11.2.
6. Connect the thermistor to THM of branch cable and connect the encoder cable to SCALE correctly. Incorrect setting will trigger [AL. 16].
7. For the network module connections, refer to respective communication method manuals of "MR-J4-_TM_ Servo Amplifier Instruction Manual".

(2) When using A/B/Z-phase differential output linear encoder

The configuration diagram is an example of MR-J4-20TM. When using the other servo amplifiers, the configuration will be the same as rotary servo motors except for connections of linear servo motors and linear encoders. Refer to section 1.8 depending on servo amplifiers you use.

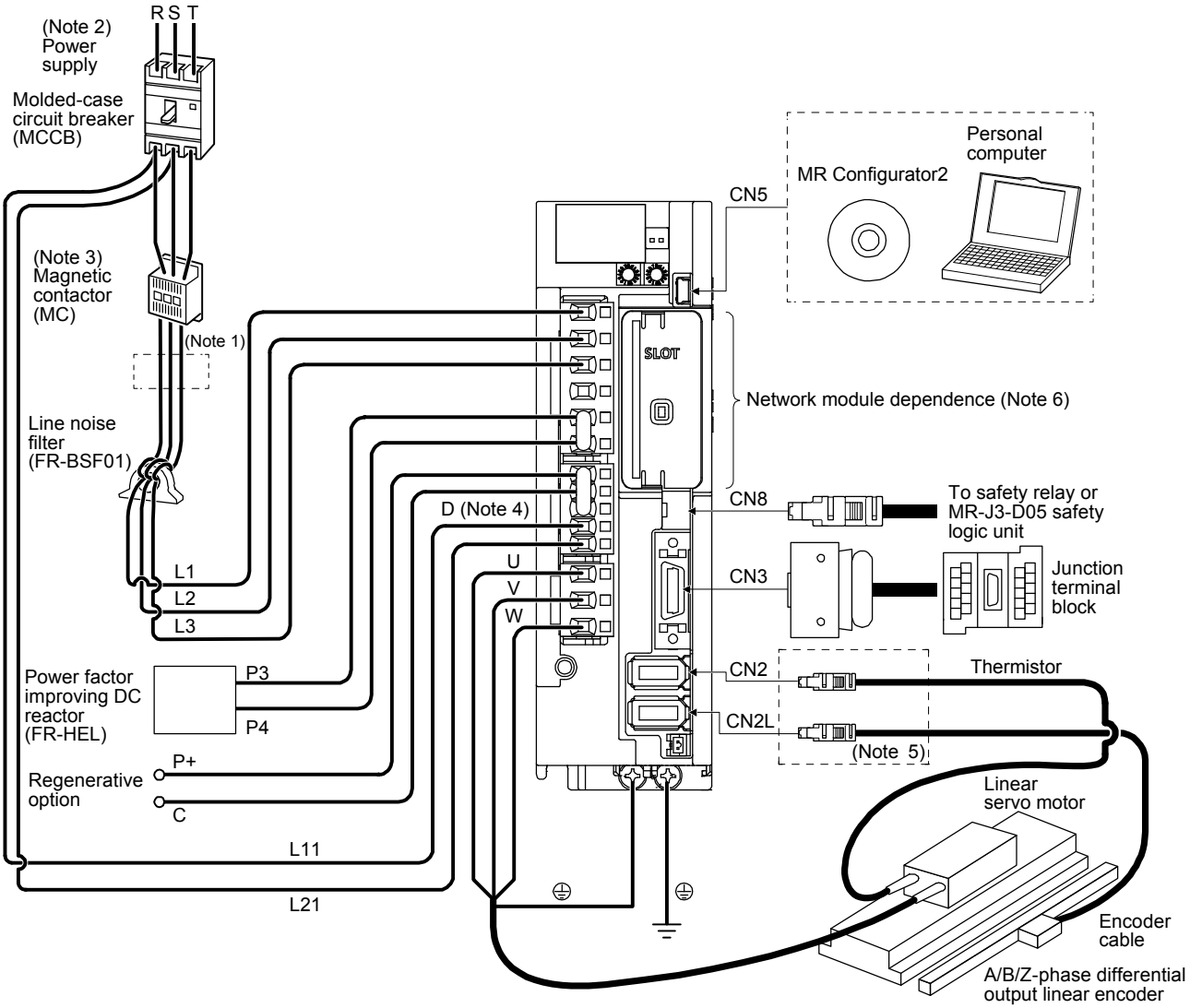

Note 1. The power factor improving AC reactor can also be used. In this case, the power factor improving DC reactor cannot be used. When not using the power factor improving DC reactor, short P3 and P4.

2. A 1-phase 200 V AC to 240 V AC power supply may be used with the servo amplifier of MR-J4-200TM or less. For 1-phase 200 V AC to 240 V AC, connect the power supply to L1 and L3. Leave L2 open. For the power supply specifications, refer to section 1.3.

3. Depending on the main circuit voltage and operation pattern, bus voltage decreases, and that may cause the forced stop deceleration to shift to the dynamic brake deceleration. When dynamic brake deceleration is not required, slow the time to turn off the magnetic contactor.

4. Always connect between P+ and D terminals. When using the regenerative option, refer to section 11.2.

5. Connect the thermistor to CN2 of servo amplifier and connect the encoder cable to CN2L correctly. Incorrect setting will trigger [AL. 16].

6. For the network module connections, refer to respective communication method manuals of "MR-J4-_TM_ Servo Amplifier Instruction Manual".

14.2 Signals and wiring

⚠WARNING

- Any person who is involved in wiring should be fully competent to do the work.
- Before wiring, turn off the power and wait for 15 minutes or more until the charge lamp turns off. Then, confirm that the voltage between P+ and N- is safe with a voltage tester and others. Otherwise, an electric shock may occur. In addition, when confirming whether the charge lamp is off or not, always confirm it from the front of the servo amplifier.
- Ground the servo amplifier and the linear servo motor securely.
- Do not attempt to wire the servo amplifier and the linear servo motor until they have been installed. Otherwise, it may cause an electric shock.
- The cables should not be damaged, stressed, loaded, or pinched. Otherwise, it may cause an electric shock.
- To avoid an electric shock, insulate the connections of the power supply terminals.

⚠CAUTION

- Wire the equipment correctly and securely. Otherwise, the linear servo motor may operate unexpectedly, resulting in injury.
- Connect cables to the correct terminals. Otherwise, a burst, damage, etc. may occur.
- Ensure that polarity (+/-) is correct. Otherwise, a burst, damage, etc. may occur.
- The surge absorbing diode installed to the DC relay for control output should be fitted in the specified direction. Otherwise, the emergency stop and other protective circuits may not operate.

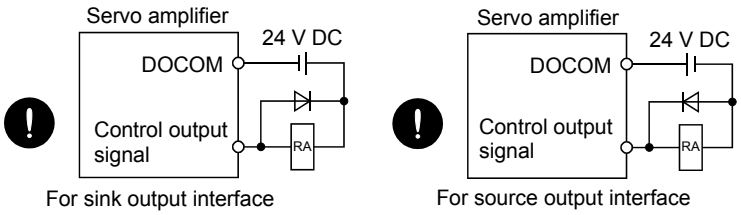

- Use a noise filter, etc. to minimize the influence of electromagnetic interference. Electromagnetic interference may be given to the electronic equipment used near the servo amplifier.
- Do not install a power capacitor, surge killer or radio noise filter (optional FR-BIF(-H)) with the power wire of the linear servo motor.
- When using the regenerative resistor, switch power off with the alarm signal. Otherwise, a transistor fault or the like may overheat the regenerative resistor, causing a fire.
- Connect the servo amplifier power output (U/V/W) to the linear servo motor power input (U/V/W) directly. Do not let a magnetic contactor, etc. intervene. Otherwise, it may cause a malfunction.

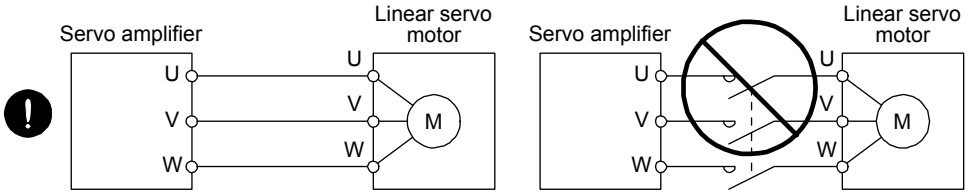

⚠CAUTION

- Connecting a linear servo motor for different axis to the U, V, W, or CN2 may cause a malfunction.
- Do not modify the equipment.
- The cables such as power wires deriving from the primary side cannot stand the long-term bending action. Avoid the bending action by fixing the cables to the moving part, etc. Also, use the cable that stands the long-term bending action for the wiring to the servo amplifier.
- Before wiring, switch operation, etc., eliminate static electricity. Otherwise, it may cause a malfunction.

This chapter does not describe the following items. For details of the items, refer to each section of the detailed description field.

Item	Detailed explanations
Connection example of power circuit	Section 3.1
Explanation of power supply system	Section 3.3
Signal (device) explanations	Section 3.5
Alarm occurrence timing chart	Section 3.7
Interfaces	Section 3.8
Grounding	Section 3.10
Switch setting and display of the servo amplifier	Section 4.3

14.3 Operation and functions

14.3.1 Startup

POINT
●When using the linear servo motor, set [Pr. PA01] to "_ _ 4 _".

(1) Startup procedure

Start up the linear servo system in the following procedure.

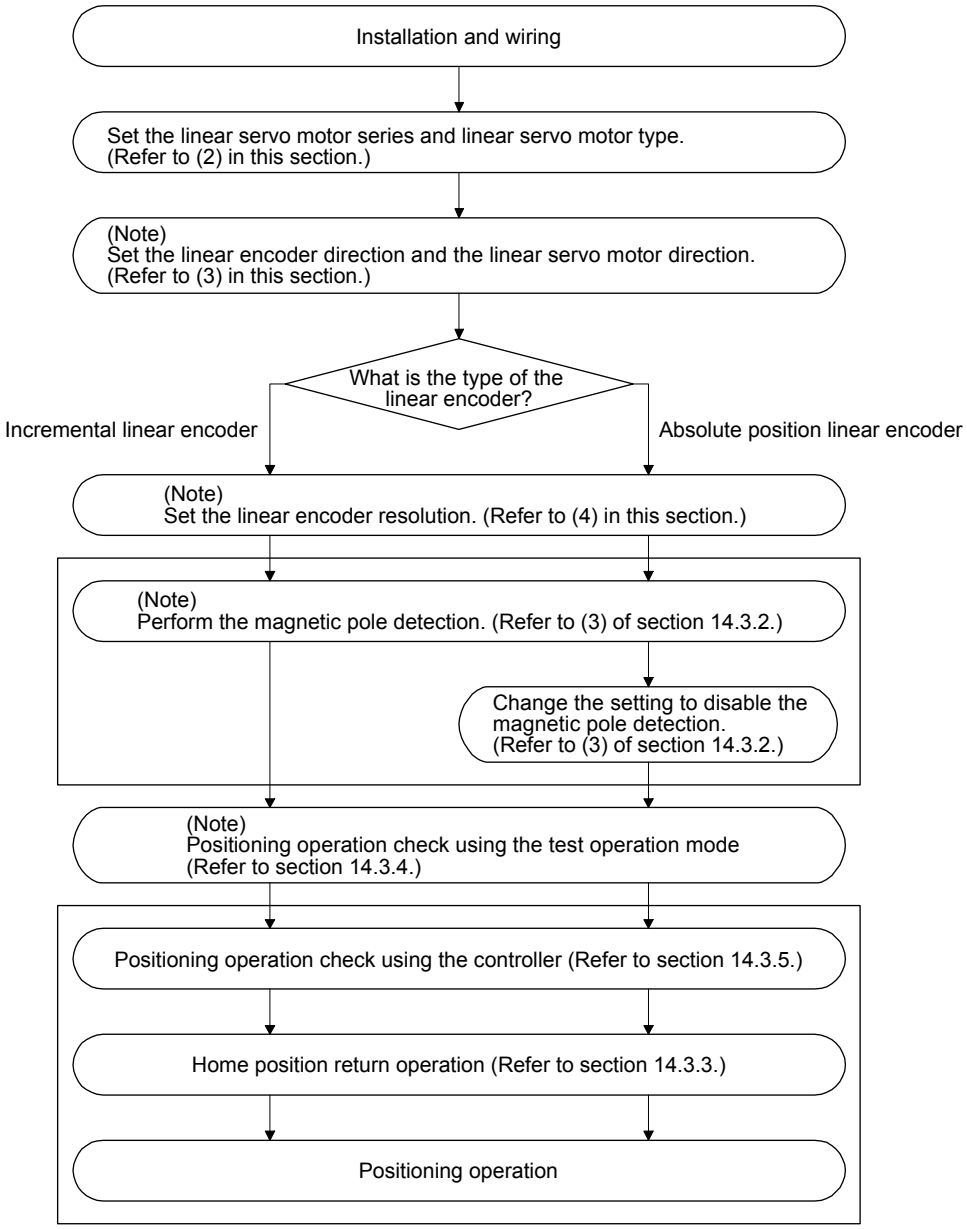

Note. Use MR Configurator2.

(2) Set the linear servo motor series and linear servo motor type.

To use the linear servo motor, set the linear servo motor series and linear servo motor type with [Pr. PA17 Servo motor series setting] and [Pr. PA18 Servo motor type setting]. (Refer to section 5.2.1.)

(3) Settings of the linear encoder direction and the linear servo motor direction
Set the first digit of [Pr. PC27] (Encoder pulse count polarity selection) so that the positive direction of the linear servo motor matches with the increasing direction of the linear encoder feedback.

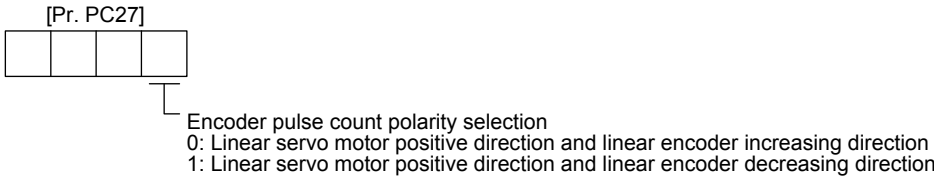

(a) Parameter setting method

1) Confirm the positive direction of the linear servo motor. [Pr. PA14] determines the relation of the travel direction of the linear servo motor under commands as shown below.

[Pr. PA14] setting	Travel direction of linear servo motor	
	Address increasing command	Address decreasing command
0	Positive direction	Negative direction
1	Negative direction	Positive direction

The positive/negative directions of the linear servo motor are as follows.

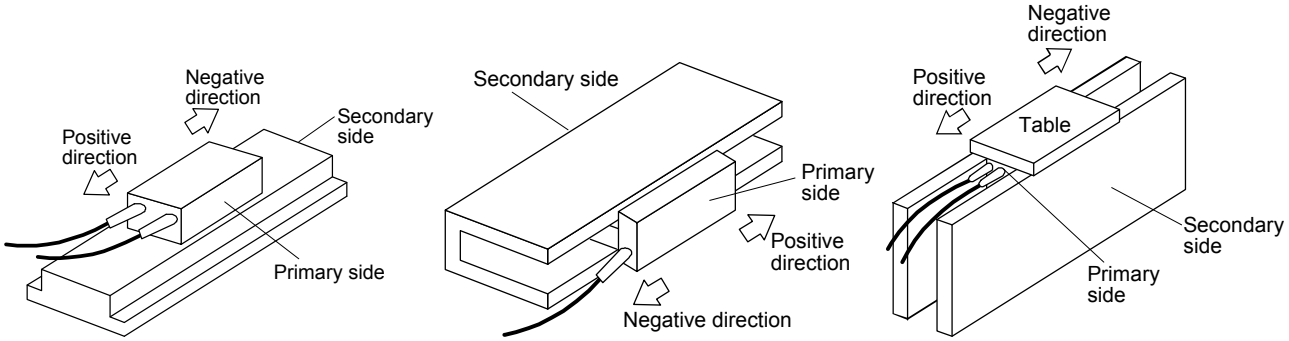

LM-H3 and LM-F series　　LM-U2 series　　LM-K2 series

2) Confirm the increasing direction of the linear encoder.

3) If the positive direction of the linear servo motor matches with the increasing direction of the linear encoder, set [Pr. PC27] to "_ _ _ 0". If the positive direction of the linear servo motor does not match with the increasing direction of the linear encoder, set [Pr. PC27] to "_ _ _ 1".

(b) Confirmation method
Confirm the positive direction of the linear servo motor and the increasing direction of the linear encoder in the following procedure.

1) In servo-off status, move the linear servo motor in the positive direction manually.

2) Confirm the motor speed (in the positive and negative directions) at that time with MR Configurator2.

3) When [Pr. PC27] is set to "_ _ _ 0" and the positive direction of the linear servo motor matches with the increasing direction of the linear encoder, if the linear servo motor operates in the positive direction, the motor speed will be a positive value. If the positive direction of the linear servo motor does not match with the increasing direction of the linear encoder, the motor speed will be a negative value. When [Pr. PC27] is set to "_ _ _ 1" and the positive direction of the linear servo motor matches with the increasing direction of the linear encoder, if the linear servo motor operates in the positive direction, the motor speed will be a negative value.

(4) Linear encoder resolution setting

POINT

- To enable the parameter value, cycle the power after setting.
- If an incorrect value is set for [Pr. PL02] or [Pr. PL03], the linear servo motor may not operate properly, or [AL. 27] or [AL. 42] may occur at the positioning operation or the magnetic pole detection.

Set the ratio of the electronic gear to the linear encoder resolution with [Pr. PL02 Linear encoder resolution - Numerator] and [Pr. PL03 Linear encoder resolution - Denominator].

(a) Parameter setting
Set the values that apply to the following equation.

$$\frac{\text{[Pr. PL02 Linear encoder resolution - Numerator]}}{\text{[Pr. PL03 Linear encoder resolution - Denominator]}} = \text{Linear encoder resolution [μm]}$$

(b) Parameter setting example
When the linear encoder resolution is 0.5 μm

$$\frac{\text{[Pr. PL02]}}{\text{[Pr. PL03]}} = \text{Linear encoder resolution} = 0.5\ \mu\text{m} = \frac{1}{2}$$

The following shows the simplified chart for the setting values of [Pr. PL02] and [Pr. PL03].

		Linear encoder resolution [μm]							
		0.01	0.02	0.05	0.1	0.2	0.5	1.0	2.0
Setting value	[Pr. PL02]	1	1	1	1	1	1	1	2
	[Pr. PL03]	100	50	20	10	5	2	1	1

14.3.2 Magnetic pole detection

POINT

●Set [Pr. PE47 Torque offset] to "0 (initial value)" before executing the magnetic pole detection.

Before the positioning operation of the linear servo motor, make sure to perform the magnetic pole detection. When [Pr. PL01] is set to the initial value, perform the magnetic pole detection only at the first servo-on after the power is turned on.

The magnetic pole detection includes the following two methods. Each method has advantages and disadvantages. Select a magnetic pole detection method suitable for your usage.
The position detection method is selected in the initial setting.

Magnetic pole detection	Advantage	Disadvantage
Position detection method	1. The magnetic pole detection has a high degree of accuracy. 2. The adjustment procedure at the magnetic pole detection is simple.	1. The travel distance at the magnetic pole detection is large. 2. For equipment with small friction, the initial magnetic pole detection error may occur.
Minute position detection method	1. The travel distance at the magnetic pole detection is small. 2. Even for equipment with small friction, the magnetic pole detection is available.	1. The adjustment procedure at the magnetic pole detection is complex. 2. If a disturbance occurs during the magnetic pole detection, [AL. 27 Initial magnetic pole detection error] may occur.

(1) Magnetic pole detection method by using MR Configurator2

The following shows the magnetic pole detection procedure by using MR Configurator2.

(a) Magnetic pole detection by the position detection method

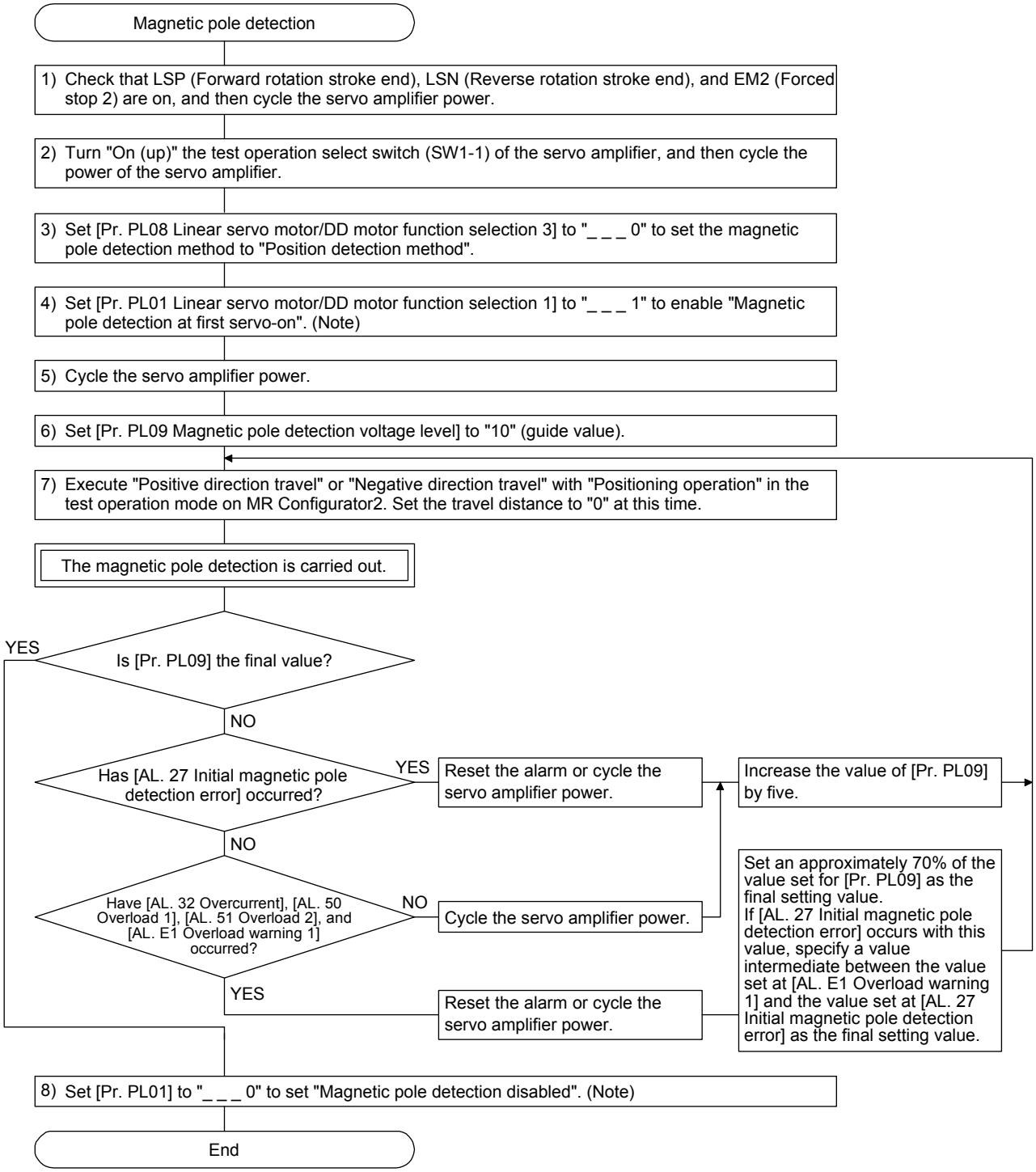

Note. For the incremental system, the [Pr. PL01] setting is not required.

(b) Magnetic pole detection by the minute position detection method

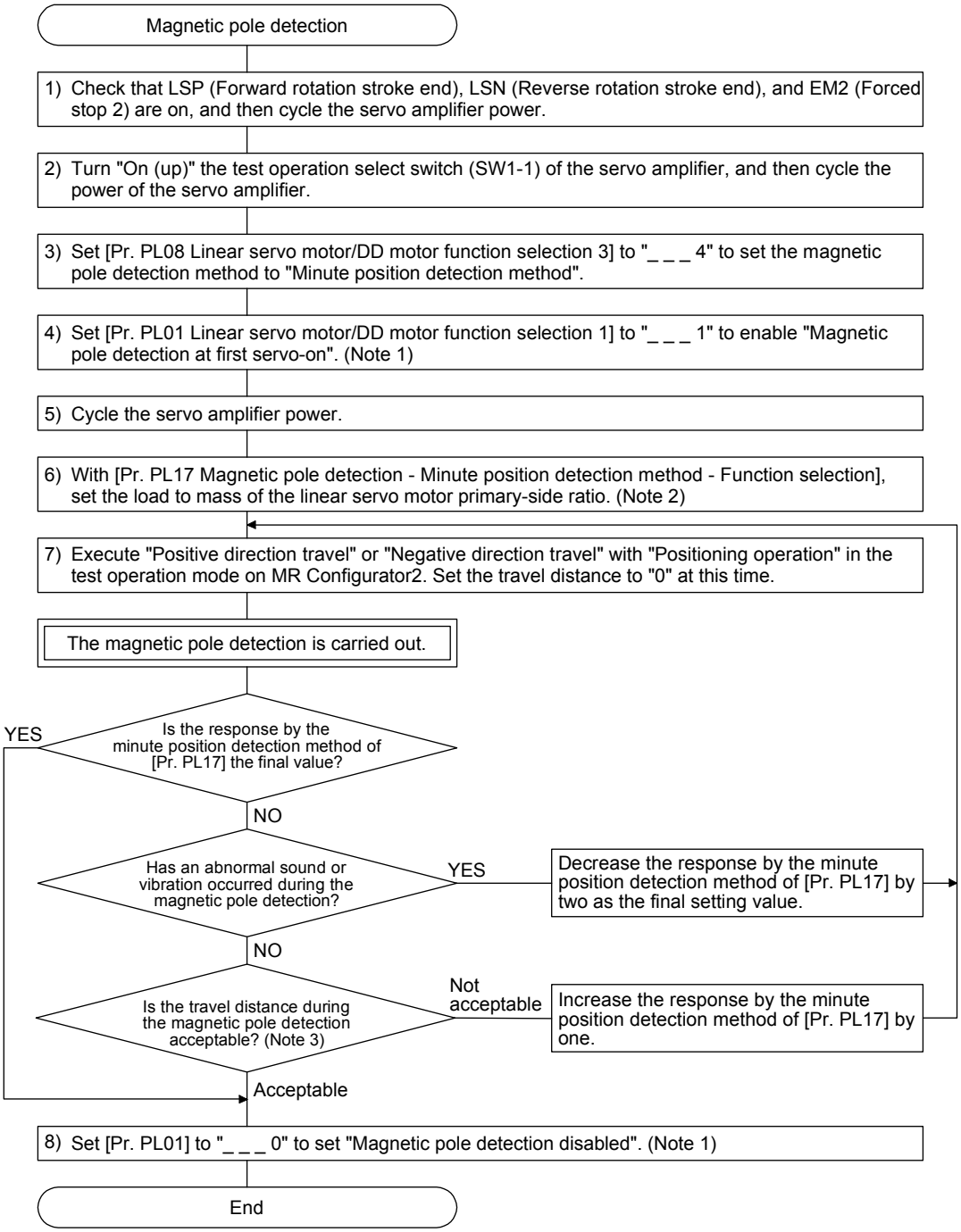

Note 1. When the linear encoder is an incremental type, the [Pr. PL01] setting is not required.
2. If the load to primary-side linear servo motor mass ratio is unknown, perform the magnetic pole detection by the position detection method, and then perform the auto tuning to set an estimated value.
3. For the magnetic pole detection by the minute position detection method, the maximum travel distance at the magnetic pole detection must be 0.5 mm or less. To shorten the travel distance, increase the response by the minute position detection method in [Pr. PL17].

(c) State transition of the servo amplifier display (3-digit, 7-segment LED) at the magnetic pole detection
When the magnetic pole detection with MR Configurator2 is normally executed, the servo amplifier display (3-digit, 7-segment LED) shows the state as below.

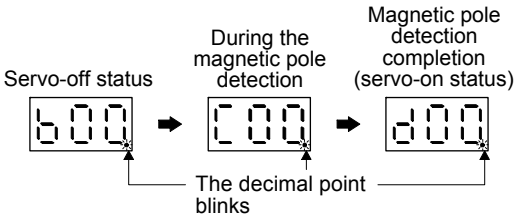

(2) Preparation for the magnetic pole detection

POINT
●When you select the test operation mode with the test operation select switch (SW1-1), the network communication for the servo amplifier and later will be blocked.

For the magnetic pole detection, use the test operation mode (positioning operation) of MR Configurator2. Turn off the servo amplifier power, and set the test operation select switch (SW1-1) as shown below. Turning on the power enables the test operation mode.

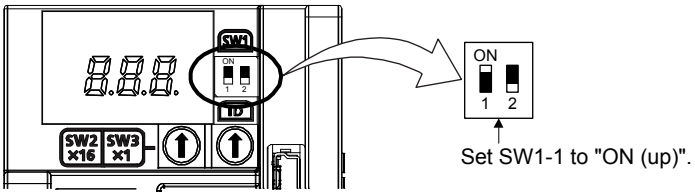

(3) Operation at the magnetic pole detection

⚠WARNING ●Note that the magnetic pole detection automatically starts simultaneously with the turning-on of the servo-on command.

⚠CAUTION ●If the magnetic pole detection is not executed properly, the linear servo motor may operates unexpectedly.

POINT

●Establish the machine configuration to use LSP (Upper stroke end) and LSN (Lower stroke end). The machine may be damaged due to a collision without LSP and LSN.
●Assign LSP and LSN and perform the magnetic pole detection also in the torque mode.
●At the magnetic pole detection, whether the linear servo motor moves in the positive or negative direction is unpredictable.
●Depending on the setting value of [Pr. PL09 Magnetic pole detection voltage level], an overload, overcurrent, magnetic pole detection alarm, or others may occur.
●When performing the positioning operation from a controller, use the sequence which confirms the normal completion of the magnetic pole detection and the servo-on status, then outputs the positioning command. If the controller outputs the positioning command before RD (Ready) turns on, the command may not be accepted or an alarm may occur.
●After the magnetic pole detection, check the positioning accuracy with the test operation (positioning operation function) of MR Configurator2.
●When the absolute position linear encoder is used, if a gap is generated to the positional relation between the linear encoder and the linear servo motor, perform the magnetic pole detection again.
●The accuracy of the magnetic pole detection improves with no load.
●An alarm may occur when the linear encoder is not mounted properly, or when the linear encoder resolution setting ([Pr. PL02] and [Pr. PL03]) or the setting value of [Pr. PL09 Magnetic pole detection voltage level] is incorrect.
●For the machine that its friction becomes 30% or more of the continuous thrust, the linear servo motor may not operate properly after the magnetic pole detection.
●For the horizontal shaft of the machine that its unbalanced thrust becomes 20% or more of the continuous thrust, the linear servo motor may not operate properly after the magnetic pole detection.
●For the machine that multiple axes are connected like a tandem configuration, if you try to perform the magnetic pole detection simultaneously for multiple axes, the magnetic pole detection may not be executed. Perform the magnetic pole detection for each axis. At this time, set the axes that the magnetic pole detection is not performed for to servo-off.

(a) For the incremental linear encoder

POINT
●For the incremental linear encoder, the magnetic pole detection is required every time the power is turned on.

By turning on the servo-on command from the controller after the power-on, the magnetic pole detection is automatically carried out. Therefore, there is no need to set the parameter (first digit of [Pr. PL01]) for executing the magnetic pole detection.

1) Timing chart

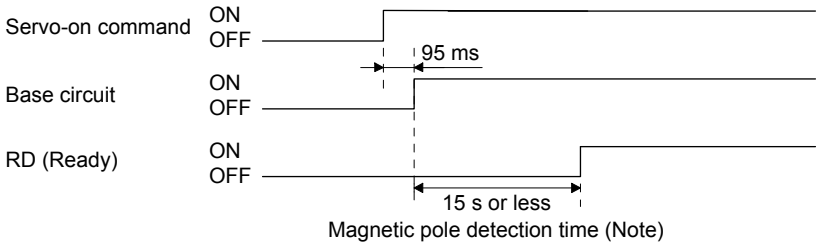

Note. The magnetic pole detection time indicates the operation time when LSP (Forward rotation stroke end) and LSN (Reverse rotation stroke end) are on.

2) Linear servo motor movement (when LSP (Forward rotation stroke end) and LSN (Reverse rotation stroke end) are on)

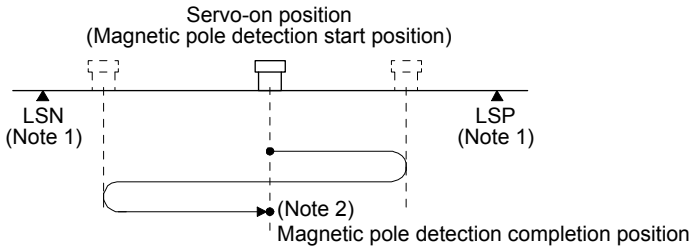

Note 1. When you turn off LSP (Forward rotation stroke end) or LSN (Reverse rotation stroke end) during the magnetic pole detection, the operation of the magnetic pole detection is carried on to the opposite direction. When both LSP and LSN are off, [AL. 27 Initial magnetic pole detection error] occurs.

2. The following shows the pitch against the magnetic pole.

Linear servo motor series	LM-H3 LM-F	LM-U2		LM-K2
		Medium thrust (Continuous thrust: Less than 400 N)	Large thrust (Continuous thrust: 400 N or more)	
Pitch against magnetic pole [mm]	48	30	60	48

3) Linear servo motor movement (when LSP (Forward rotation stroke end) or LSN (Reverse rotation stroke end) is off)
When LSP or LSN is off at servo-on, the magnetic pole detection is carried out as follows.

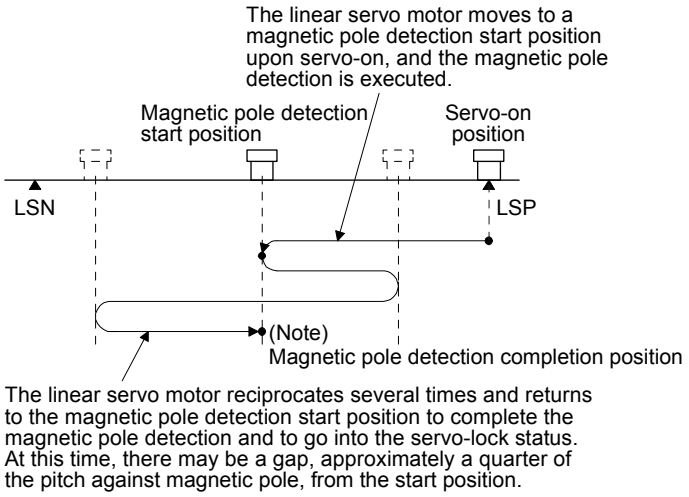

Note. For the pitch against magnetic pole, refer to (3) (a) 2) Note 2 in this section.

(b) For the absolute position linear encoder

POINT
●The magnetic pole detection is required in the following timings. ・When the system is set up (at the first startup of equipment) ・After a servo amplifier is replaced ・After a linear servo motor (primary-side or secondary-side) is replaced ・After a linear encoder (scale or head) is replaced or remounted ●If a gap is generated to the positional relation between the linear encoder and the linear servo motor, perform the magnetic pole detection again.

Perform the magnetic pole detection in the following procedure.

1) Set [Pr. PL01 Linear servo motor/DD motor function selection 1] to "_ _ _ 1" (Magnetic pole detection at first servo-on).

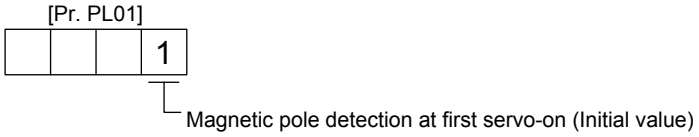

2) Execute the magnetic pole detection. (Refer to (3) (a) in this section.)

3) After the completion of the magnetic pole detection, change [Pr. PL01] to "_ _ _ 0" (Magnetic pole detection disabled).

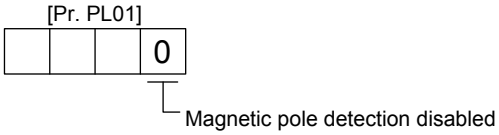

After the magnetic pole detection, by disabling the magnetic pole detection function with [Pr. PL01], the magnetic pole detection after each power-on is not required.

(4) Magnetic pole detection method setting

POINT

●In the following cases, set the magnetic pole detection method to the minute position detection method.
- When a shorten travel distance at the magnetic pole detection is required
- When the magnetic pole detection by the position detection method is not completed

Set the magnetic pole detection method using the first digit of [Pr. PL08] (Magnetic pole detection method selection).

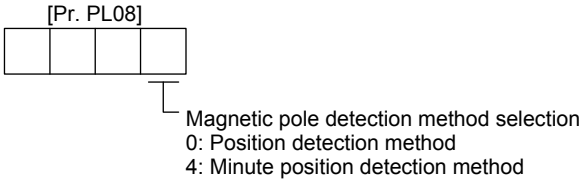

(5) Setting of the magnetic pole detection voltage level by the position detection method
For the magnetic pole detection by the position detection method, set the voltage level with [Pr. PL09 Magnetic pole detection voltage level]. For the magnetic pole detection by the minute position detection method, the voltage level setting is not required.

(a) Guideline of parameter settings
Set the parameters by referring to the following table.

[Pr. PL09] setting (guide value) / Servo status	Small ← Medium → Large (10 or less (initial value) 50 or more)	
Thrust at operation	Small	Large
Overload, overcurrent alarm	Seldom occurs	Frequently occurs
Magnetic pole detection alarm	Frequently occurs	Seldom occurs
Magnetic pole detection accuracy	Low	High

(b) Setting procedure

1) Perform the magnetic pole detection, and increase the setting value of [Pr. PL09 Magnetic pole detection voltage level] until [AL. 50 Overload 1], [AL. 51 Overload 2], [AL. 33 Overvoltage], [AL. E1 Overload warning 1], and [AL. EC Overload warning 2] occur. Increase the setting value by five as a guide value. When these alarms and warnings occur during the magnetic pole detection by using MR Configurator2, the test operation of MR Configurator2 automatically completes and the servo-off status is established.

2) Specify the setting value that is an approximately 70% of the value set when [AL. 50 Overload 1], [AL. 51 Overload 2], [AL. 33 Overvoltage], [AL. E1 Overload warning 1], and [AL. EC Overload warning 2] occurred as the final setting value. However, if [AL. 27 Initial magnetic pole detection error] occurs with this value, specify a value intermediate between the value set at [AL. 50 Overload 1], [AL. 51 Overload 2], [AL. 33 Overvoltage], [AL. E1 Overload warning 1], and [AL. EC Overload warning 2] and the value set at the magnetic pole detection alarm as the final setting value.

3) Perform the magnetic pole detection again with the final setting value to check there is no problem.

(c) Setting example

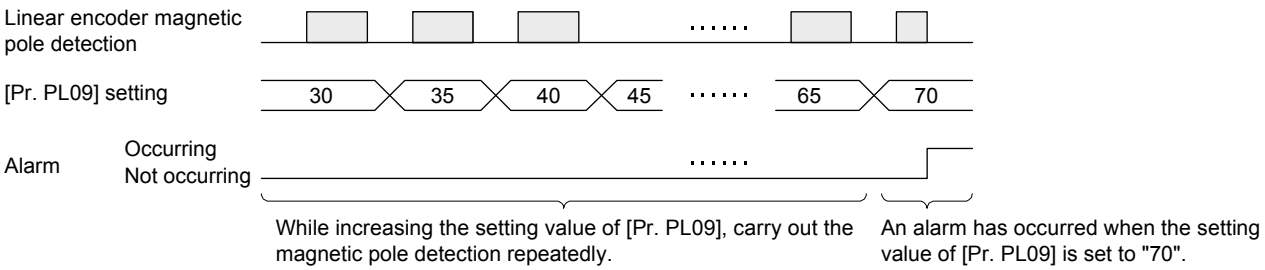

In this example, the final setting value of [Pr. PL09] is 49 (Setting value at the alarm occurrence = 70 × 0.7).

14.3.3 Home position return

POINT
●The incremental linear encoder and the absolute position linear encoder have different reference home positions at the home position return.

(1) Incremental linear encoder

⚠CAUTION	●If the resolution or the stop interval (the third digit of [Pr. PL01]) of the linear encoder is large, it is very dangerous since the linear servo motor may crash into the stroke end.

(a) When the linear encoder home position (reference mark) exists in the home position return direction
When an incremental linear encoder is used, the home position is the position per 1048576 pulses (changeable with the third digit of [Pr. PL01]) with reference to the linear encoder home position (reference mark) passed through first after a home position return start. Change the setting value of [Pr. PL01] according to the linear encoder resolution.

[Pr. PL01]

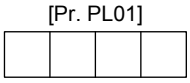

Stop interval setting at the home position return

Setting value	Stop interval [pulse]
0	8192
1	131072
2	262144
3	1048576 (initial value)
4	4194304
5	16777216
6	67108864

The following shows the relation between the stop interval at the home position return and the linear encoder resolution. For example, when the linear encoder resolution is 0.001 μm and the parameter for the stop interval at the home position return, [Pr. PL01], is set to "_ 5 _ _" (16777216 pulses), the stop interval is 16.777 mm. The value inside a bold box indicates the recommended stop interval for each linear encoder resolution.

[Unit: mm]

Pr. PL01	Linear encoder resolution [μm] / Stop interval [pulse]	0.001	0.005	0.01	0.02	0.05	0.1	0.2	0.5	1	2
_ 0 _ _	8192	0.008	0.041	0.082	0.164	0.410	0.819	1.638	4.096	8.192	16.384
_ 1 _ _	131072	0.131	0.655	1.311	2.621	6.554	13.107	26.214	65.536	131.072	262.144
_ 2 _ _	262144	0.262	1.311	2.621	5.243	13.107	26.214	52.429	131.072	262.144	524.288
_ 3 _ _	1048576	1.049	5.243	10.486	20.972	52.429	104.858	209.715	524.288	1048.576	2097.152
_ 4 _ _	4194304	4.194	20.972	41.943	83.886	209.715	419.430	838.861	2097.152	4194.304	8388.608
_ 5 _ _	16777216	16.777	83.886	167.772	335.544	838.861	1677.722	3355.443	8388.608	16777.216	33554.432
_ 6 _ _	67108864	67.109	335.544	671.089	1342.177	3355.443	6710.886	13421.773	33554.432	67108.864	134217.728

In the case of a dog type home position return, after the proximity dog signal rear end is detected, the nearest home position reference position shifted by the home position shift distance is used as the home position.
Set one linear encoder home position in the full stroke, and set it in the proximity dog signal detection position.
When two or more reference marks exist during the full stroke of the linear encoder, select "Enabled (_ _ 1 _)" of "Linear scale multipoint Z-phase input function selection" in [Pr. PC17].

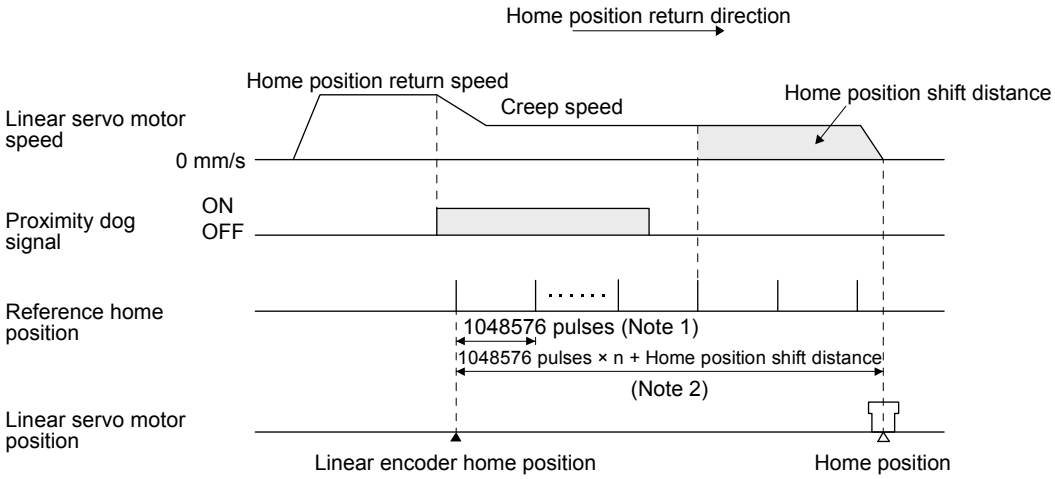

Note 1. Changeable with [Pr. PL01].
2. Home position shift distance can be changed with [Pr. PT07] and [Pr. PT69].

(b) When the linear encoder home position does not exist in the home position return direction

POINT
●To execute a home position return securely, start a home position return after moving the linear servo motor to the opposite stroke end with JOG operation from the controller and others. ●Change the third digit value of [Pr. PL01] according to the linear encoder resolution.

If the home position return is performed from the position where the linear encoder home position does not exist in the home position return direction, an error may occur depending on the home position return type. In this case, change the home position return type, or move the mover to the stroke end on the opposite side of the home position return direction with the JOG operation from the controller and others, and then perform a home position return.

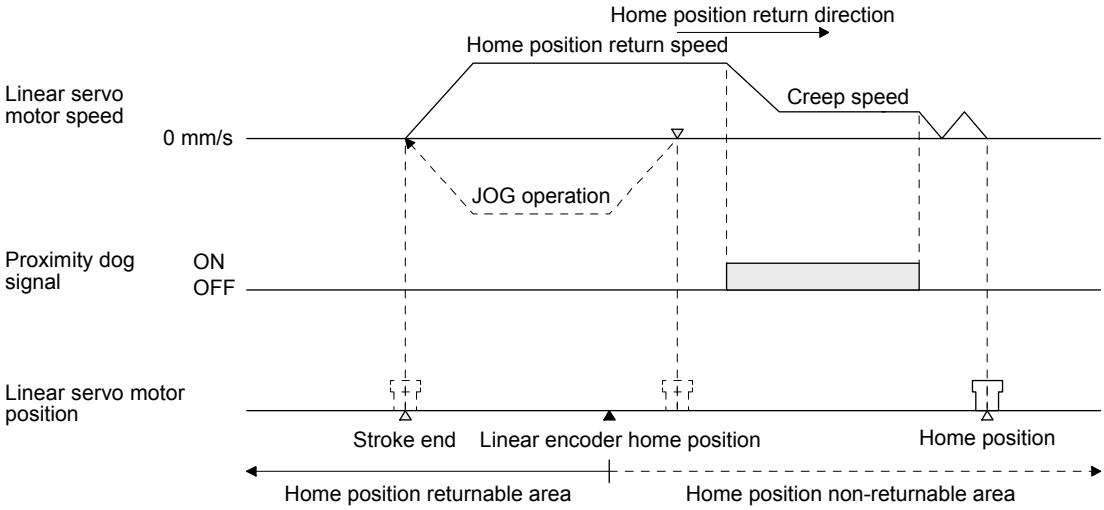

(2) Absolute position linear encoder

POINT
●The data set type home position return can also be carried out.

When an absolute linear encoder is used, the reference home position is the position per 1048576 pulses (changeable with the third digit of [Pr. PL01]) with reference to the linear encoder home position (absolute position data = 0).
In the case of a proximity dog type home position return, the nearest reference home position after proximity dog off is the home position. The linear encoder home position can be set in any position. LZ (Encoder Z-phase pulse) is outputted based on "Stop interval selection at the home position return" in [Pr. PL01].

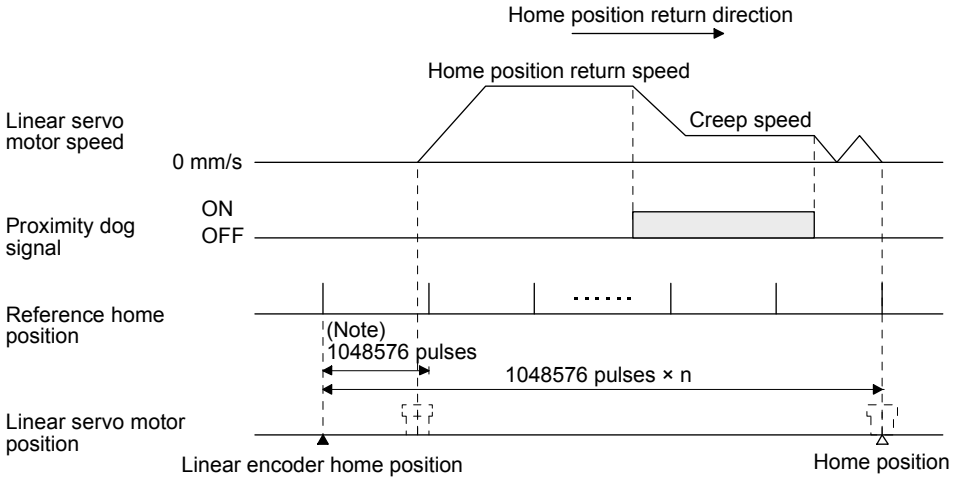

Note. Changeable with [Pr. PL01].

14.3.4 Test operation mode in MR Configurator2

⚠CAUTION

- The test operation mode is designed for checking servo operation. It is not for checking machine operation. Do not use this mode with the machine. Always use the linear servo motor alone.
- If the servo motor operates abnormally, use EM2 (Forced stop 2) to stop it.

POINT

- The content described in this section indicates the environment where the servo amplifier and a personal computer are directly connected.
- When you select the test operation mode with the test operation select switch (SW1-1), the network communication for the servo amplifier and later will be blocked.

By using a personal computer and MR Configurator2, you can execute the positioning operation, the output signal (DO) forced output, the program operation and single-step feed without connecting the controller.

(1) Test operation mode type

(a) Positioning operation

Positioning operation can be performed without using the controller. Use this operation with the forced stop reset. This operation may be used independently of whether the servo is on or off and whether the controller is connected or not.

Exercise control on the positioning operation screen of MR Configurator2.

1) Operation pattern

Item	Initial value	Setting range
Travel distance [pulse]	1048576	0 to 99999999
Speed [mm/s]	10	0 to Maximum speed
Acceleration/deceleration time constant [ms]	1000	0 to 50000
Repeat pattern	Positive direction travel → Negative direction travel	Positive direction travel → Negative direction travel Positive direction travel → Positive direction travel Negative direction travel → Positive direction travel Negative direction travel → Negative direction travel
Dwell time [s]	2.0	01 to 50.0
Number of repeats [time]	1	1 to 9999

2) Operation method

Operation	Screen control
Positive direction travel	Click "Positive Direction Movement".
Negative direction travel	Click "Reverse Direction Movement".
Pause	Click "Pause".
Stop	Click "Stop".
Forced stop	Click "Forced stop".

(b) Output signal (DO) forced output
Output signals can be switched on/off forcibly independently of the servo status. This function is used for output signal wiring check, etc. Exercise control on the DO forced output screen of MR Configurator2.

(c) Program operation
Positioning operation can be performed in two or more operation patterns combined, without using the controller. Use this operation with the forced stop reset. This operation may be used independently of whether the servo is on or off and whether the controller is connected or not. Exercise control on the program operation screen of MR Configurator2. For details, refer to Help of MR Configurator2.

Operation	Screen control
Start	Click "Operation start".
Pause	Click "Pause".
Stop	Click "Stop".
Forced stop	Click "Forced stop".

(d) Single-step feed
The positioning operation can be performed in accordance with the point table No. set with MR Configurator2.
Select the test operation/single-step feed from the menu of MR Configurator2. When the single-step feed window is displayed, input the following items and operate.

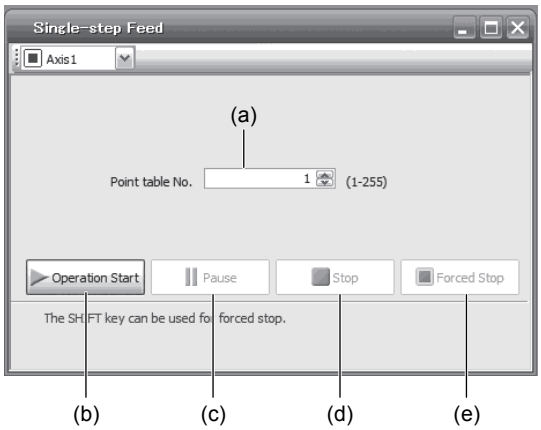

Point table operation

1) Set the point table No.
Enter a point table No. in the input box (a) "Point table No.".

2) Forward/reverse the servo motor
Click "Operation Start" (b) to rotate the servo motor.

3) Pause the servo motor
Click "Pause" (c) to temporarily stop the servo motor.
Click "Operation Start" (b) during a temporary stop to restart the rotation of the remaining travel distance.
In addition, click "Stop" (d) during a temporary stop to clear the remaining travel distance.

4) Stop the servo motor
   Click "Stop" (d) to stop the servo motor. At this time, the remaining travel distance will be cleared. Click "Operation Start" (b) to restart the rotation.

5) Execute the servo motor forced stop
   Click "Forced Stop" (e) to make an instantaneous stop. When "Forced Stop" is enabled, "Operation Start" cannot be used. Click "Forced Stop" again to enable "Operation Start".

6) Switch to the normal operation mode
   Before switching from the test operation mode to the normal operation mode, turn off the servo amplifier.

(2) Operation procedure

1) Turn off the power.

2) Turn "ON (up)" SW1-1.

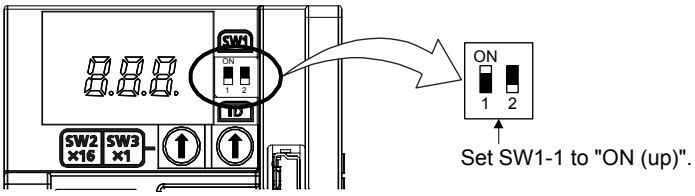

   Turning "ON (up)" SW1-1 during power-on will not enable the test operation mode.

3) Turn on the servo amplifier.
   When initialization is over, the display shows the following screen.

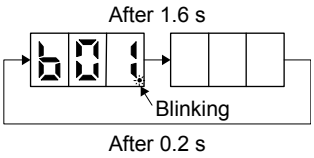

4) Start operation with the personal computer.

14.3.5 Operation from controller

For the system using the incremental linear encoder, the magnetic pole detection is automatically performed at the first servo-on after the power-on. For this reason, when performing the positioning operation, create the sequence which surely confirms the servo-on status as the inter lock condition of the positioning command.

14.3.6 Function

(1) Linear servo control error detection function

POINT
●For the linear servo control error detection function, the position and speed deviation error detections are enabled by default. ([Pr. PL04]: _ _ _ 3)

If the linear servo control gets unstable for some reasons, the linear servo motor may not operate properly. To detect this state and to stop operation, the linear servo control error detection function is used as a protective function.
The linear servo control error detection function has three different detection methods: the position deviation, speed deviation, and thrust deviation. An error is detected when each method is enabled with [Pr. PL04 Linear servo motor/DD motor function selection 2]. The detection level can be changed with [Pr. PL05], [Pr. PL06], and [Pr. PL07].

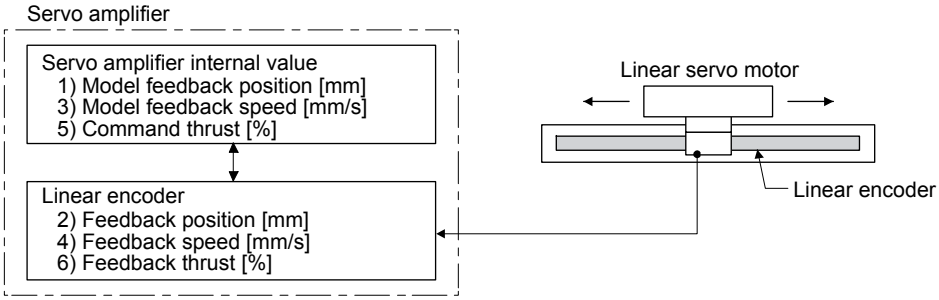

Figure 14.1 Outline of linear servo control error detection function

(a) Position deviation error detection
Set [Pr. PL04] to "_ _ _ 1" to enable the position deviation error detection.

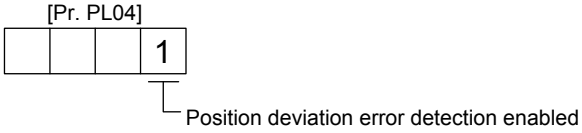

When you compare the model feedback position (1)) and the feedback position (2)) in figure 14.1, if the deviation is more than the value of [Pr. PL05 Position deviation error detection level] (1 mm to 1000 mm), [AL. 42.1 Servo control error by position deviation] will occur and the linear servo motor will stop. The initial value of this detection level is 50 mm. Replace the set value as required.

(b) Speed deviation error detection
Set [Pr. PL04] to "_ _ _ 2" to enable the speed deviation error detection.

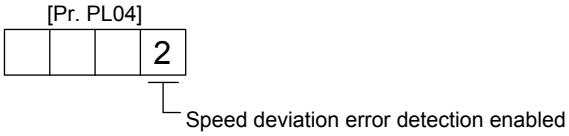

When you compare the model feedback speed (3)) and the feedback speed (4)) in figure 14.1, if the deviation is more than the value of [Pr. PL06 Speed deviation error detection level] (1 mm/s to 5000 mm/s), [AL. 42.2 Servo control error by speed deviation] will occur and the linear servo motor will stop. The initial value of this detection level is 1000 mm/s. Replace the set value as required.

(c) Thrust deviation error detection level

Set [Pr. PL04] to "_ _ _ 4" to enable the thrust deviation error detection.

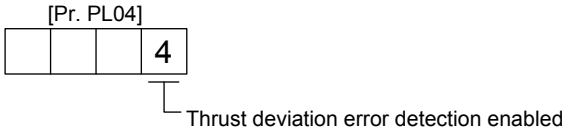

When you compare the command thrust (5)) and the feedback thrust (6)) in figure 14.1, if the deviation is more than the value of [Pr. PL07 Torque/thrust deviation error detection level] (1% to 1000%), [AL. 42.3 Servo control error by torque/thrust deviation] will occur and the linear servo motor will stop. The initial value of this detection level is 100%. Replace the set value as required.

(d) Detecting multiple deviation errors

When setting [Pr. PL04] as shown below, multiple deviation errors can be detected. For the error detection methods, refer to (1) (a), (b), (c) in this section.

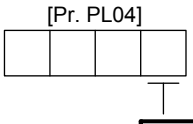

Setting value	Position deviation error detection	Speed deviation error detection	Thrust deviation error detection
1	○		
2		○	
3	○	○	
4			○
5	○		○
6		○	○
7	○	○	○

(2) Auto tuning function

POINT

●The auto tuning mode 1 may not be performed properly if the following conditions are not satisfied.

- Time to reach 2000 mm/s is the acceleration/deceleration time constant of 5 s or less.
- The linear servo motor speed is 150 mm/s or higher.
- The load to mass of the linear servo motor primary-side ratio is 100 times or less.
- The acceleration/deceleration thrust is 10% or less of the continuous thrust.

The auto tuning function during the linear servo motor operation is the same as that of the rotary servo motor. However, the calculation method of the load to motor mass ratio (J ratio) differs. The load to motor mass ratio (J ratio) on the linear servo motor is calculated by dividing the load mass by the mass of the linear servo motor primary side.

Example) Mass of linear servo motor primary side = 2 kg
Load mass (excluding the mass of the linear servo motor primary side) = 4 kg
Mass ratio = 4/2 = 2 times

For the parameters set by the auto tuning function, refer to chapter 6.

(3) Machine analyzer function

POINT
●Make sure to perform the machine analyzer function after the magnetic pole detection. If the magnetic pole detection is not performed, the machine analyze function may not operate properly. ●The stop position at the completion of the machine analyzer function can be any position.

14.3.7 Absolute position detection system

When the linear servo motor is used with the absolute position detection system, an absolute position linear encoder is required. The linear encoder backs up the absolute position data. Therefore, the encoder battery need not be installed to the servo amplifier. Additionally, [AL. 25 Absolute position erased], [AL. 92 Battery cable disconnection warning], [AL. 9F Battery warning], and [AL. E3 Absolute position counter warning] are not provided for the linear servo motor.

14.4 Characteristics

14.4.1 Overload protection characteristics

An electronic thermal is built in the servo amplifier to protect the linear servo motor, servo amplifier and linear servo motor power wires from overloads.
[AL. 50 Overload 1] occurs if overload operation performed is above the electronic thermal protection curve shown in fig. 14.2. [AL. 51 Overload 2] occurs if the maximum current is applied continuously for several seconds due to machine collision, etc. Use the equipment on the left-side area of the continuous or broken line in the graph.
Use the linear servo motor with 70% or less of the effective load ratio when it is in the servo lock state or in a small reciprocating motion.
This servo amplifier has solid-state linear servo motor overload protection. (The linear servo motor overload current (full load current) is set on the basis of 120% rated current of the servo amplifier.)

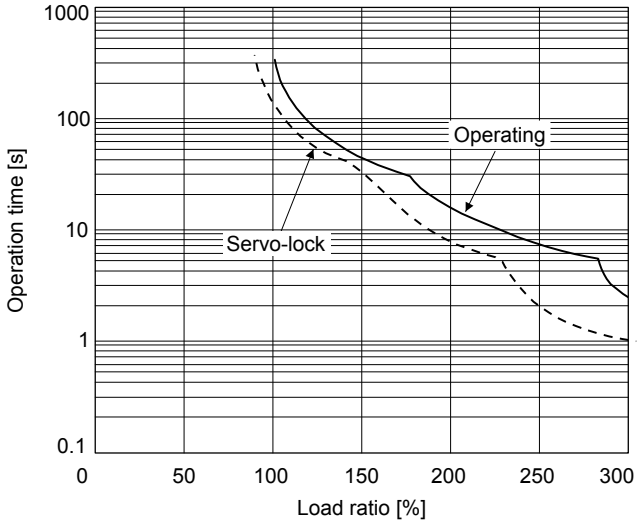

a. LM-H3 series
LM-K2 series

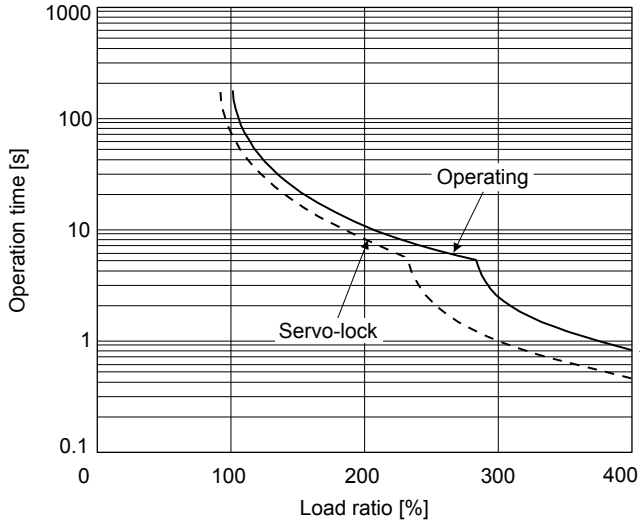

b. LM-U2 series

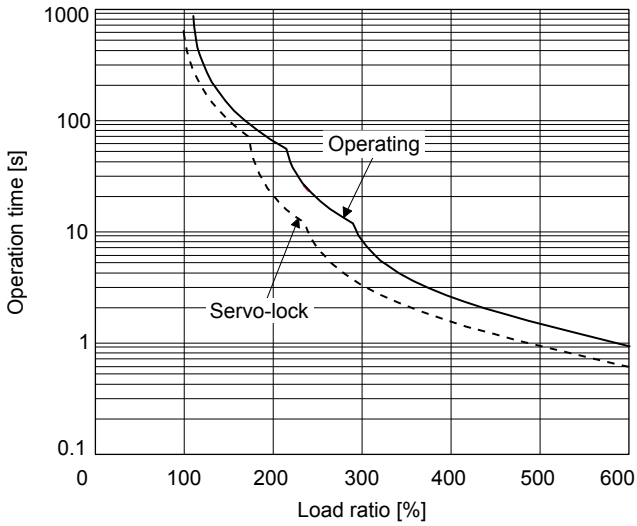

c. LM-F series (natural cooling)

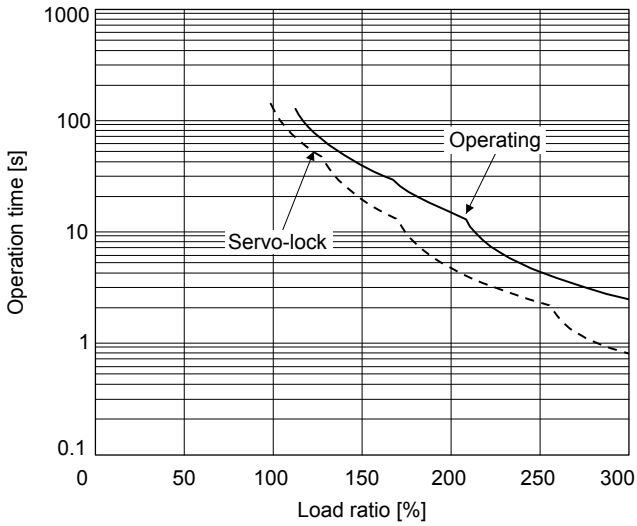

d. LM-F series (liquid cooling)

Fig. 14.2 Electronic thermal protection characteristics

14.4.2 Power supply capacity and generated loss

Table 14.1 indicates servo amplifiers' power supply capacities and losses generated under rated load. For thermal design of an enclosed type cabinet, use the values in the table in consideration for the worst operating conditions. The actual amount of generated heat will be intermediate between values at rated torque and servo-off according to the duty used during operation. When the linear servo motor is run at less than the rated speed, the power supply capacity will be smaller than the value in the table, but the servo amplifier's generated heat will not change.
Mounting a heat sink outside of the cabinet enables to reduce heat in the cabinet and design a compact enclosed type cabinet.

Table 14.1 Power supply capacity and generated loss per linear servo motor at rated output

Linear servo motor (primary side)	Servo amplifier	Power supply capacity [kVA] (Note 1)	Servo amplifier-generated heat [W] (Note 2)		Area required for heat dissipation [m^2]
			At rated output	With servo-off	
LM-H3P2A-07P-BSS0	MR-J4-40TM MR-J4-40TM1	0.9	35	15	0.7
LM-H3P3A-12P-CSS0		0.9	35	15	0.7
LM-H3P3B-24P-CSS0	MR-J4-70TM	1.3	50	15	1.0
LM-H3P3C-36P-CSS0		1.9	75	15	1.5
LM-H3P3D-48P-CSS0	MR-J4-200TM	3.5	90	20	1.8
LM-H3P7A-24P-ASS0	MR-J4-70TM	1.3	50	15	1.0
LM-H3P7B-48P-ASS0	MR-J4-200TM	3.5	90	20	1.8
LM-H3P7C-72P-ASS0		3.8	100	20	1.1
LM-H3P7D-96P-ASS0	MR-J4-350TM	5.5	130	20	2.7
LM-U2PAB-05M-0SS0	MR-J4-20TM MR-J4-20TM1	0.5	25	15	0.5
LM-U2PAD-10M-0SS0	MR-J4-40TM MR-J4-40TM1	0.9	35	15	0.7
LM-U2PAF-15M-0SS0		0.9	35	15	0.7
LM-U2PBB-07M-1SS0	MR-J4-20TM MR-J4-20TM1	0.5	25	15	0.5
LM-U2PBD-15M-1SS0	MR-J4-60TM	1.0	40	15	0.8
LM-U2PBF-22M-1SS0	MR-J4-70TM	1.3	50	15	1.0
LM-U2P2B-40M-2SS0	MR-J4-200TM	3.5	90	20	1.8
LM-U2P2C-60M-2SS0	MR-J4-350TM	5.5	130	20	2.7
LM-U2P2D-80M-2SS0	MR-J4-500TM	7.5	195	25	3.9
LM-FP2B-06M-1SS0	MR-J4-200TM	3.5	90	20	1.8
LM-FP2D-12M-1SS0	MR-J4-500TM	7.5	195	25	3.9
LM-FP2F-18M-1SS0	MR-J4-700TM	10	300	25	6.0
LM-FP4B-12M-1SS0	MR-J4-500TM	7.5	195	25	3.9
LM-FP4D-24M-1SS0	MR-J4-700TM	10	300	25	6.0
LM-FP4F-36M-1SS0	MR-J4-11KTM	14	460	45	9.2
LM-FP4H-48M-1SS0	MR-J4-15KTM	18	580	45	11.6
LM-FP5H-60M-1SS0	MR-J4-22KTM4	22	640	45	12.8
LM-K2P1A-01M-2SS1	MR-J4-40TM MR-J4-40TM1	0.9	35	15	0.7
LM-K2P1C-03M-2SS1	MR-J4-200TM	3.5	90	20	1.8
LM-K2P2A-02M-1SS1	MR-J4-70TM	1.3	50	15	1.0
LM-K2P2C-07M-1SS1	MR-J4-350TM	5.5	130	20	2.7
LM-K2P2E-12M-1SS1	MR-J4-500TM	7.5	195	25	3.9
LM-K2P3C-14M-1SS1	MR-J4-350TM	5.5	130	20	2.7
LM-K2P3E-24M-1SS1	MR-J4-500TM	7.5	195	25	3.9

Note 1. Note that the power supply capacity will vary according to the power supply impedance. This value is applicable when the power factor improving AC reactor or power factor improving DC reactor is not used.
2. Heat generated during regeneration is not included in the servo amplifier-generated heat. To calculate heat generated by the regenerative option, refer to section 11.2.

14.4.3 Dynamic brake characteristics

⚠CAUTION

- The coasting distance is a theoretically calculated value which ignores the running load such as friction. The calculated value is considered to be longer than the actual distance. However, if an enough braking distance is not provided, a moving part may crash into the stroke end, which is very dangerous. Install the anti-crash mechanism such as an air brake or an electric/mechanical stopper such as a shock absorber to reduce the shock of moving parts. No linear servo motor with an electromagnetic brake is available.

POINT

- Do not use dynamic brake to stop in a normal operation as it is the function to stop in emergency.
- For a machine operating at the recommended load to motor mass ratio or less, the estimated number of usage times of the dynamic brake is 1000 times while the machine decelerates from the rated speed to a stop once in 10 minutes.
- Be sure to enable EM1 (Forced stop 1) after the linear servo motor stops when using EM1 (Forced stop 1) frequently in other than emergency.

The approximate coasting distance from when the dynamic brake is activated until when the linear servo motor stops can be calculated with the equation below.

$$Lmax = V_0 \cdot (0.03 + M \cdot (A + B \cdot V_0^2))$$

Lmax: Coasting distance of the machine [m]
V_0: Speed when the brake is activated [m/s]
M: Full mass of the moving part [kg]
A: Coefficient (Refer to the following tables.)
B: Coefficient (Refer to the following tables.)

Linear servo motor (primary side)	Coefficient A	Coefficient B
LM-H3P2A-07P-BSS0	7.15×10^{-3}	2.94×10^{-3}
LM-H3P3A-12P-CSS0	2.81×10^{-3}	1.47×10^{-3}
LM-H3P3B-24P-CSS0	7.69×10^{-3}	2.27×10^{-4}
LM-H3P3C-36P-CSS0	7.22×10^{-3}	1.13×10^{-4}
LM-H3P3D-48P-CSS0	1.02×10^{-3}	2.54×10^{-4}
LM-H3P7A-24P-ASS0	7.69×10^{-3}	2.14×10^{-4}
LM-H3P7B-48P-ASS0	9.14×10^{-4}	2.59×10^{-4}
LM-H3P7C-72P-ASS0	7.19×10^{-4}	1.47×10^{-4}
LM-H3P7D-96P-ASS0	6.18×10^{-4}	9.59×10^{-5}

Linear servo motor (primary side)	Coefficient A	Coefficient B
LM-U2PAB-05M-0SS0	5.72×10^{-2}	1.72×10^{-4}
LM-U2PAD-10M-0SS0	2.82×10^{-2}	8.60×10^{-5}
LM-U2PAF-15M-0SS0	1.87×10^{-2}	5.93×10^{-5}
LM-U2PBB-07M-1SS0	3.13×10^{-2}	1.04×10^{-4}
LM-U2PBD-15M-1SS0	1.56×10^{-2}	5.18×10^{-5}
LM-U2PBF-22M-1SS0	4.58×10^{-2}	1.33×10^{-5}
LM-U2P2B-40M-2SS0	1.47×10^{-3}	1.27×10^{-5}
LM-U2P2C-60M-2SS0	1.07×10^{-3}	7.66×10^{-6}
LM-U2P2D-80M-2SS0	9.14×10^{-4}	5.38×10^{-6}

Linear servo motor (primary side)	Coefficient A	Coefficient B
LM-FP2B-06M-1SS0	8.96×10^{-4}	1.19×10^{-3}
LM-FP2D-12M-1SS0	5.55×10^{-4}	4.81×10^{-4}
LM-FP2F-18M-1SS0	4.41×10^{-4}	2.69×10^{-4}
LM-FP4B-12M-1SS0	5.02×10^{-4}	4.36×10^{-4}
LM-FP4D-24M-1SS0	3.55×10^{-4}	1.54×10^{-4}
LM-FP4F-36M-1SS0	1.79×10^{-4}	1.36×10^{-4}
LM-FP4H-48M-1SS0	1.15×10^{-4}	1.19×10^{-4}
LM-FP5H-60M-1SS0	1.95×10^{-4}	4.00×10^{-5}

Linear servo motor (primary side)	Coefficient A	Coefficient B
LM-K2P1A-01M-2SS1	5.36×10^{-3}	6.56×10^{-3}
LM-K2P1C-03M-2SS1	1.17×10^{-3}	3.75×10^{-4}
LM-K2P2A-02M-1SS1	2.49×10^{-2}	1.02×10^{-3}
LM-K2P2C-07M-1SS1	6.85×10^{-4}	2.80×10^{-4}
LM-K2P2E-12M-1SS1	5.53×10^{-4}	1.14×10^{-4}
LM-K2P3C-14M-1SS1	2.92×10^{-4}	1.16×10^{-4}
LM-K2P3E-24M-1SS1	2.53×10^{-4}	5.52×10^{-5}

14.4.4 Permissible load to motor mass ratio when the dynamic brake is used

Use the dynamic brake under the load to motor mass ratio indicated in the following table. If the load to motor mass ratio is higher than this value, the dynamic brake may burn. If there is a possibility that the load inertia moment may exceed the value, contact your local sales office.
The values of the permissible load to motor mass ratio in the table are the values when the linear servo motor is used at the maximum speed.

Linear servo motor (primary side)	Permissible load to motor mass ratio [multiplier]
LM-H3 series	40
LM-U2 series	100
LM-F series	
LM-K2 series	50

When actual speed does not reach the maximum speed of the linear servo motor, calculate the permissible load to motor mass ratio at the time of using the dynamic brake by the following equation. (The upper limit is 300 times.)

Permissible load to motor mass ratio at the time of using the dynamic brake = Value in the table × (Linear servo motor maximum speed^2/Actual using speed^2)

For example, when an actual using speed is 2 m/s or less for the LM-H3P2A-07P motor (maximum speed: 3.0 m/s), the equation will be as follows. Permissible load to motor mass ratio at the time of using the dynamic brake = $40 \times 3^2/2^2 = 90$ [times]

15. USING A DIRECT DRIVE MOTOR

⚠CAUTION ●When using the direct drive motor, read the "Direct Drive Motor Instruction Manual".

15.1 Functions and configuration

15.1.1 Summary

The fields of semiconductor/LCD manufacturing systems, mounters, and others have strong demands for high accuracy and efficiency. Therefore, the number of systems using a direct drive motor for a drive axis has been increasing. The direct drive servo system includes the following features.

(1) Performance
- (a) The direct drive servo system ensures the high-rigidity and the high-torque. A high-resolution encoder enables the high-accuracy control.
- (b) The high-resolution encoder contributes to the high-indexer accuracy.
- (c) Since reducer is no longer required, no backlash occurs. In addition, the settling time is reduced, and the high-frequency operation is enabled.
- (d) Since reducer is no longer required, the motor does not deteriorate with time by reducer.

(2) Mechanism
- (a) The motor's low profile design contributes to compact moving part of the machine and a low center of gravity for enhanced equipment stability.
- (b) The motor has an inner rotor with hollow shaft which enables cables and pipes to be passed through.
- (c) Lubrication and the maintenance due to abrasion are not required.

The following shows the differences between the direct drive motor and the rotary servo motor.

Category	Item	Differences		Remark
		Direct drive motor	Rotary servo motor	
Motor pole adjustment	Magnetic pole detection	Required	Not required (default setting)	Automatically executed at the first servo-on after the power is turned on. For the absolute position detection system, [Pr. PL01] can disable the magnetic pole detection. (Refer to (3) (a) of section 15.3.2.)
Absolute position detection system	Absolute position encoder battery	Required	Required	
	Absolute position storage unit (MR-BTAS01)	Required	Not required	

15.1.2 Servo system with auxiliary equipment

⚠CAUTION	●Connecting a direct drive motor for different axis to the U, V, W, or CN2 may cause a malfunction.

POINT

●Equipment other than the servo amplifier and direct drive motor are optional or recommended products.

●When using the direct drive motor, set [Pr. PA01] to "_ _ 6 _".

The configuration diagram is an example of MR-J4-20TM. When using the other servo amplifiers, the configuration will be the same as rotary servo motors except for connections of direct drive motors. Refer to section 1.8 depending on servo amplifiers you use.

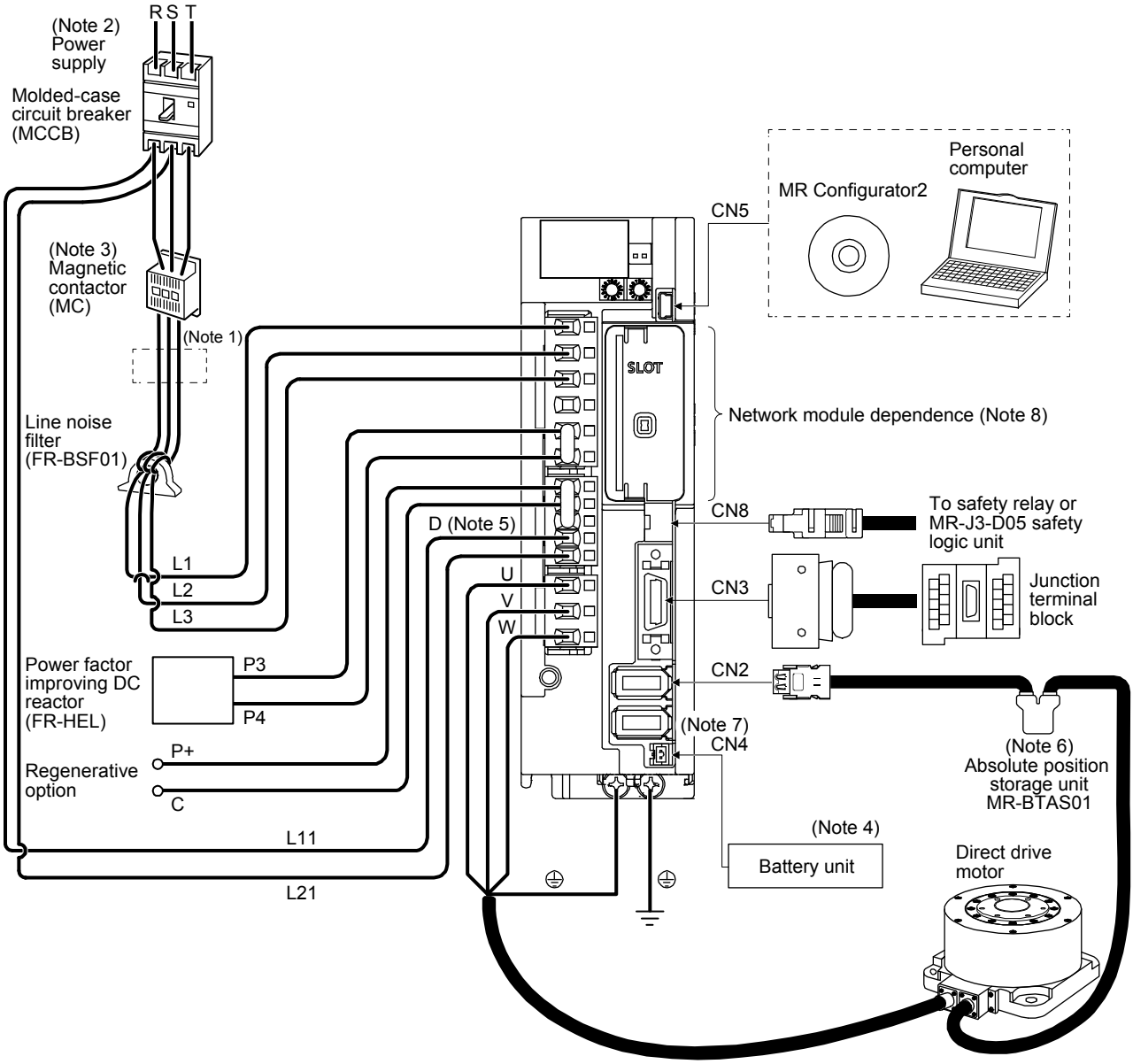

Note 1. The power factor improving AC reactor can also be used. In this case, the power factor improving DC reactor cannot be used. When not using the power factor improving DC reactor, short P3 and P4.
2. A 1-phase 200 V AC to 240 V AC power supply may be used with the servo amplifier of MR-J4-200TM or less. For 1-phase 200 V AC to 240 V AC, connect the power supply to L1 and L3. Leave L2 open. For the power supply specifications, refer to section 1.3.
3. Depending on the main circuit voltage and operation pattern, bus voltage decreases, and that may cause the forced stop deceleration to shift to the dynamic brake deceleration. When dynamic brake deceleration is not required, slow the time to turn off the magnetic contactor.
4. The battery unit is used for the absolute position detection system. (Refer to chapter 12.)
5. Always connect P+ and D. When using the regenerative option, refer to section 11.2.
6. The absolute position storage unit is used for the absolute position detection system.
7. CN2L connector is not used for the direct drive servo system.
8. For the network module connections, refer to respective communication method manuals of "MR-J4-_TM_ Servo Amplifier Instruction Manual".

15.2 Signals and wiring

⚠WARNING

- Any person who is involved in wiring should be fully competent to do the work.
- Before wiring, turn off the power and wait for 15 minutes or more until the charge lamp turns off. Then, confirm that the voltage between P+ and N- is safe with a voltage tester and others. Otherwise, an electric shock may occur. In addition, when confirming whether the charge lamp is off or not, always confirm it from the front of the servo amplifier.
- Ground the servo amplifier and the direct drive motor securely.
- Do not attempt to wire the servo amplifier and the direct drive motor until they have been installed. Otherwise, it may cause an electric shock.
- The cables should not be damaged, stressed, loaded, or pinched. Otherwise, it may cause an electric shock.
- To avoid an electric shock, insulate the connections of the power supply terminals.

⚠CAUTION

- Wire the equipment correctly and securely. Otherwise, the direct drive motor may operate unexpectedly, resulting in injury.
- Connect cables to the correct terminals. Otherwise, a burst, damage, etc. may occur.
- Ensure that polarity (+/-) is correct. Otherwise, a burst, damage, etc. may occur.
- The surge absorbing diode installed to the DC relay for control output should be fitted in the specified direction. Otherwise, the emergency stop and other protective circuits may not operate.

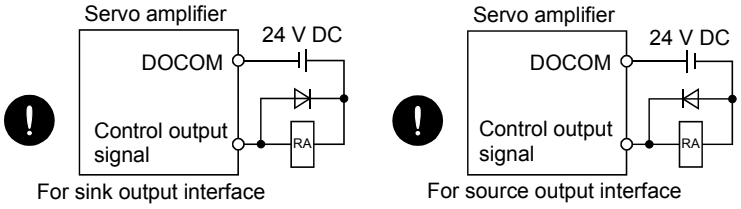

- Use a noise filter, etc. to minimize the influence of electromagnetic interference. Electromagnetic interference may be given to the electronic equipment used near the servo amplifier.

⚠CAUTION

- Do not install a power capacitor, surge killer, or radio noise filter (FR-BIF option) with the power wire of the direct drive motor.
- When using the regenerative resistor, switch power off with the alarm signal. Otherwise, a transistor fault or the like may overheat the regenerative resistor, causing a fire.
- Do not modify the equipment.
- Connect the servo amplifier power output (U/V/W) to the power input of the direct drive motor (U/V/W) directly. Do not let a magnetic contactor, etc. intervene. Otherwise, it may cause a malfunction.

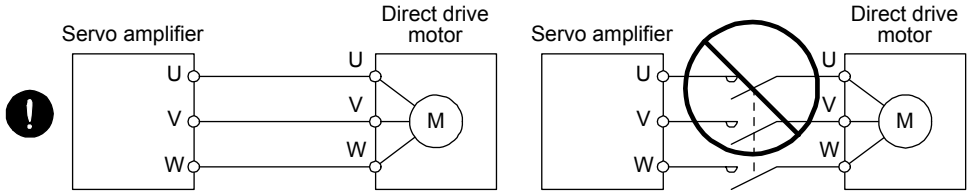

- Connecting a direct drive motor for different axis to the U, V, W, or CN2 may cause a malfunction.
- Before wiring, switch operation, etc., eliminate static electricity. Otherwise, it may cause a malfunction.

This chapter does not describe the following items. For details of the items, refer to each section of the detailed description field.

Item	Detailed explanation
Connection example of power circuit	Section 3.1
Explanation of power supply system	Section 3.3
Signal (device) explanations	Section 3.5
Alarm occurrence timing chart	Section 3.7
Interfaces	Section 3.8
Grounding	Section 3.10
Switch setting and display of the servo amplifier	Section 4.3
PARAMETERS	Chapter 5
TROUBLESHOOTING	Chapter 8

15.3 Operation and functions

POINT

- When using the direct drive motor, set [Pr. PA01] to "_ _ 6 _".
- For the test operation, refer to section 4.4.
- The Z-phase pulse of the direct drive motor must be turned on after power-on. When the machine configuration does not allow one or more revolution of the direct drive motor, install the direct drive motor so that the Z-phase pulse can be turned on.

15.3.1 Startup procedure

Start up the direct drive servo system in the following procedure.

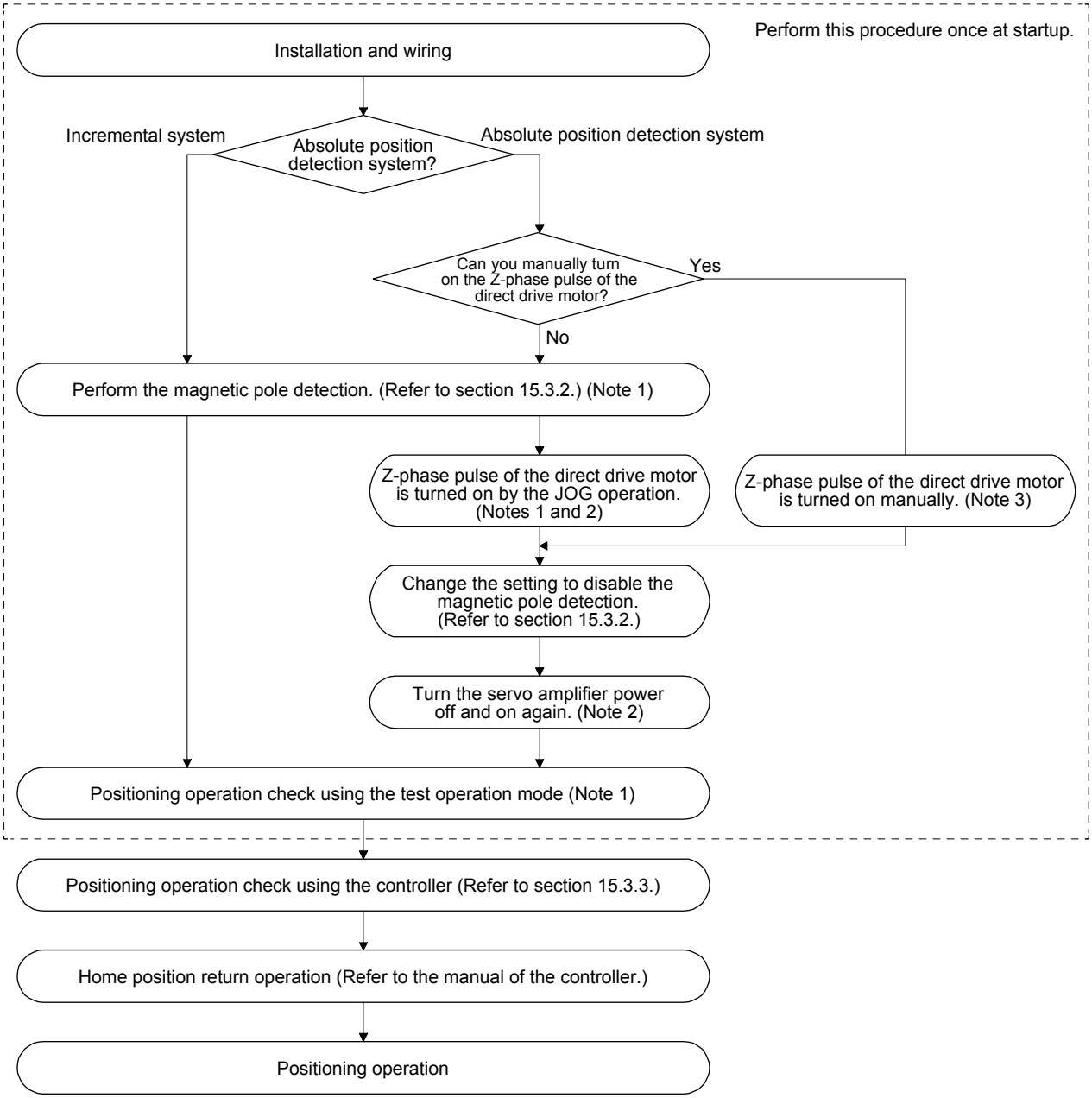

Note 1. Use MR Configurator2.

2. For the absolute position detection system, always turn on the Z-phase pulse of the direct drive motor while the servo amplifier power is on, and then turn the servo amplifier power supply off and on again. By turning off and on the power supply, the absolute position becomes confirmed. Without this operation, the absolute position will not be regained properly, and a warning will occur at the controller.

3. If the Z-phase pulse of the direct drive motor can be turned on manually, the Z-phase pulse does not have to be turned on by the magnetic pole detection or the JOG operation.
For this operation, always connect the direct drive motor encoder and the servo amplifier, and turn on only the control circuit power supply of the servo amplifier (L11 and L21) (turn off the main circuit power supply L1, L2, and L3). Perform this operation by considering the safety.

15.3.2 Magnetic pole detection

POINT

- The magnetic pole detection is not required for the configured absolute position detection system where the Z-phase pulse of the direct drive motor can be turned on manually.
  For this operation, always connect the direct drive motor encoder and the servo amplifier and turn on the control circuit power supply of the servo amplifier.
  Perform this operation by considering the safety.
- When performing a magnetic pole detection without using LSP (Forward rotation stroke end) and LSN (Reverse rotation stroke end), set [Pr. PL08 Linear servo motor/DD motor function selection 3] to "_ 1 _ _" to disable LSP and LSN.
- Set [Pr. PE47 Torque offset] to "0 (initial value)" before executing the magnetic pole detection.
- For the magnetic pole detection of vertical axis with direct drive motors, refer to section 2.1 of "Direct Drive Motor Instruction Manual".

Before the positioning operation of the direct drive motor, make sure to perform the magnetic pole detection.
Before starting up the equipment, perform the test operation (positioning operation) of MR Configurator2.

(1) Magnetic pole detection method by using MR Configurator2

The following shows the magnetic pole detection procedure by using MR Configurator2.

(a) Magnetic pole detection by the position detection method

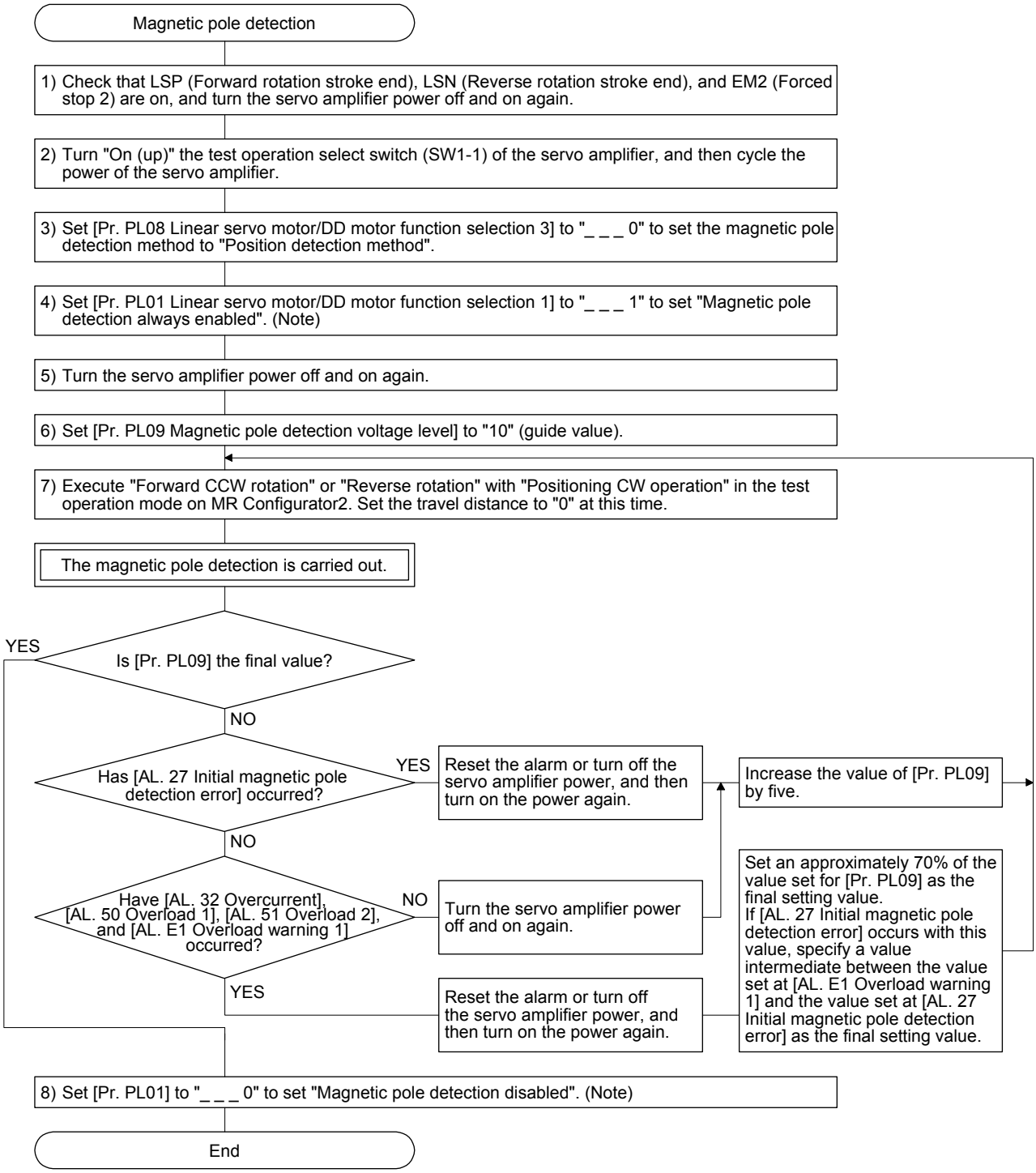

Note. For the incremental system, the [Pr. PL01] setting is not required.

(b) Magnetic pole detection by the minute position detection method

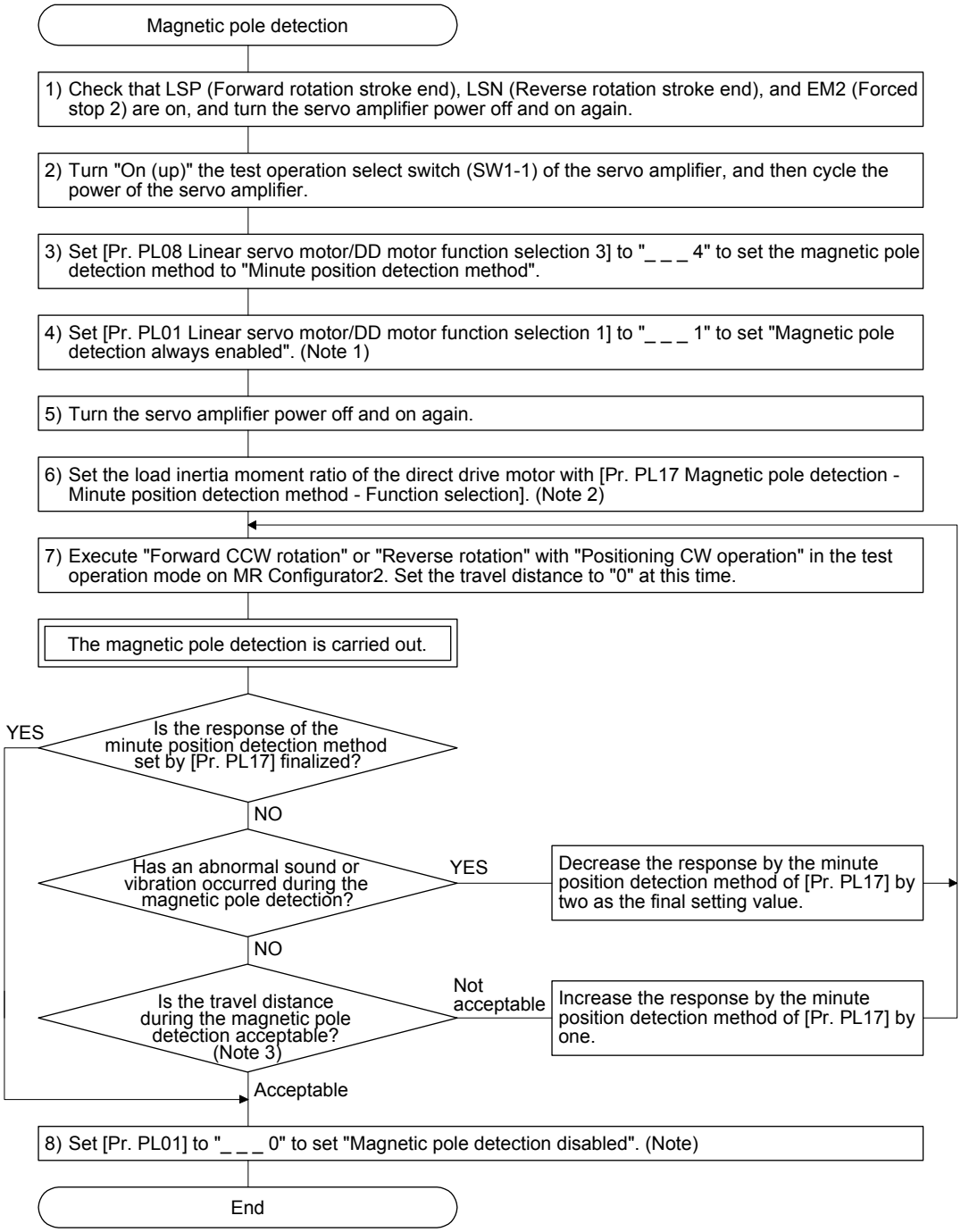

Note 1. For the incremental system, the [Pr. PL01] setting is not required.
2. If the load to direct drive motor inertia ratio is unknown, perform the magnetic pole detection by the position detection method, and then perform the auto tuning to set an estimated value.
3. For the magnetic pole detection by the minute position detection method, the maximum rotation angle at the magnetic pole detection must be five degrees or less. To shorten the travel distance, increase the response by the minute position detection method in [Pr. PL17].

(c) State transition of the servo amplifier display (3-digit, 7-segment LED) at the magnetic pole detection
When the magnetic pole detection with MR Configurator2 is normally executed, the servo amplifier display (3-digit, 7-segment LED) shows the state as below.

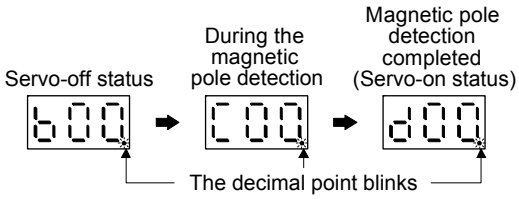

(2) Preparation for the magnetic pole detection

POINT
●When you select the test operation mode with the test operation select switch (SW1-1), the network communication for the servo amplifier and later will be blocked.

For the magnetic pole detection, use the test operation mode (positioning operation) of MR Configurator2. Turn off the servo amplifier power, and set the test operation select switch (SW1-1) as shown below. Turning on the power enables the test operation mode.

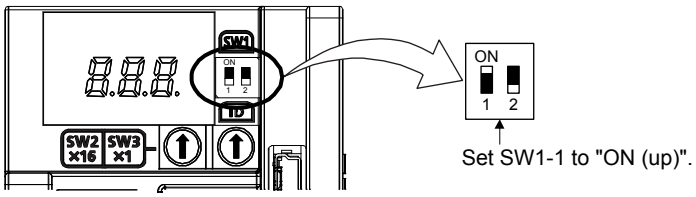

(3) Operation at the magnetic pole detection

⚠WARNING	●Note that the magnetic pole detection automatically starts simultaneously with the turning-on of the servo-on command.

⚠CAUTION	●If the magnetic pole detection is not executed properly, the direct drive motor may operates unexpectedly.

POINT

●Establish the machine configuration to use LSP (Upper stroke end) and LSN (Lower stroke end). The machine may be damaged due to a collision without LSP and LSN.
●Assign LSP and LSN and perform the magnetic pole detection also in the torque mode.
●At the magnetic pole detection, whether the motor rotates in the forward or reverse direction is unpredictable.
●Depending on the setting value of [Pr. PL09 Magnetic pole detection voltage level], an overload, overcurrent, magnetic pole detection alarm, or others may occur.
●When performing the positioning operation from a controller, use the sequence which confirms the normal completion of the magnetic pole detection and the servo-on status, then outputs the positioning command. If the controller outputs the positioning command before RD (Ready) turns on, the command may not be accepted or an alarm may occur.
●After the magnetic pole detection, check the positioning accuracy with the test operation (positioning operation function) of MR Configurator2.
●The accuracy of the magnetic pole detection improves with no load.

(a) Incremental system

POINT

●For the incremental system, the magnetic pole detection is required every time the power is turned on.

By turning on the servo-on command from the controller after the power-on, the magnetic pole detection is automatically carried out. Therefore, there is no need to set the parameter (first digit of [Pr. PL01]) for executing the magnetic pole detection.

1) Timing chart

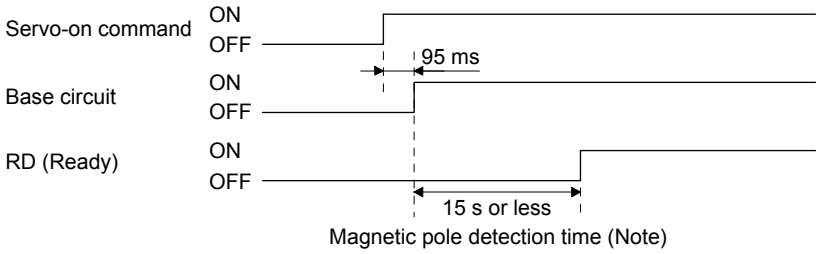

Note. The magnetic pole detection time indicates the operation time when LSP (Forward rotation stroke end) and LSN (Reverse rotation stroke end) are on.

2) Direct drive motor movement (when LSP or LSN are on)

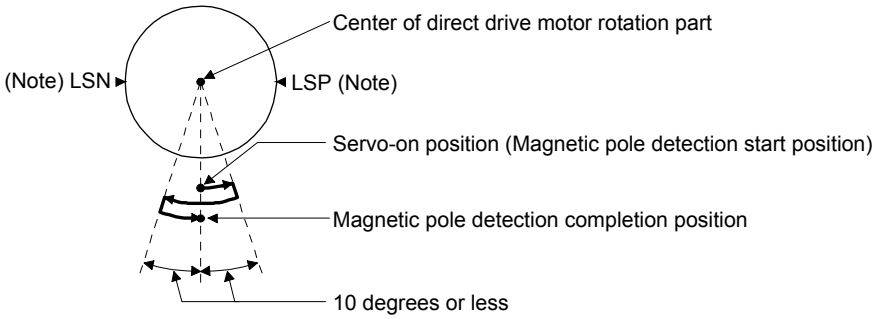

Note. When you turn off LSP (Forward rotation stroke end) or LSN (Reverse rotation stroke end) during the magnetic pole detection, the magnetic pole detection is carried on to the opposite direction. When LSP and LSN are off, [AL. 27 Initial magnetic pole detection error] occurs.

3) Direct drive motor movement (when LSP or LSN is off)
When LSP or LSN is off at servo-on, the magnetic pole detection is carried out as follows.

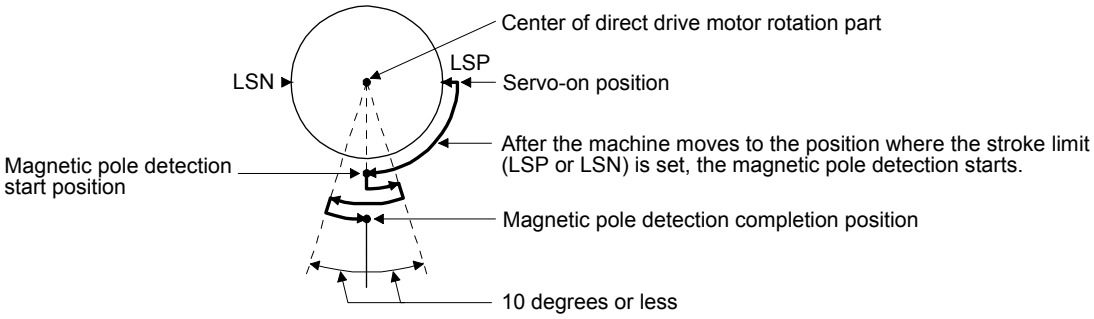

(b) Absolute position detection system

POINT

- The magnetic pole detection is required in the following timings.
  - When the system is set up (at the first startup of equipment)
  - When the Z-phase pulse of the direct drive motor is not turned on at the system setup (When the Z-phase pulse of the direct drive motor can be turned on manually, the magnetic pole detection is not required.)
  - After a direct drive motor is replaced
  - When [AL. 25 Absolute position erased] has occurred
- Turn on the Z-phase pulse of the direct drive motor in JOG operation from the controller after the magnetic pole detection.

Perform the magnetic pole detection in the following procedure.

1) Set [Pr. PL01 Linear servo motor/DD motor function selection 1] to "_ _ _ 1" (Magnetic pole detection at first servo-on).

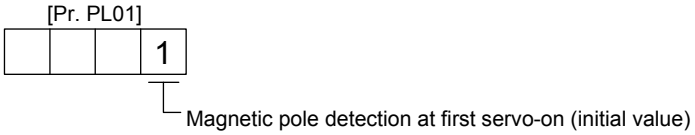

2) Execute the magnetic pole detection. (Refer to (3) (a) in this section.)

3) After the completion of the magnetic pole detection, change [Pr. PL01] to "_ _ _ 0" (Magnetic pole detection disabled).

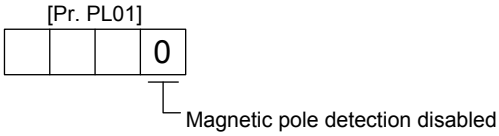

After the magnetic pole detection, by turning on the Z-phase pulse in JOG operation and by disabling the magnetic pole detection function with [Pr. PL01], the magnetic pole detection after each power-on is not required.

(4) Magnetic pole detection method setting

Set the magnetic pole detection method using the first digit of [Pr. PL08] (Magnetic pole detection method selection).

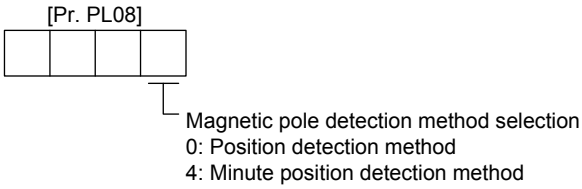

(5) Setting of the magnetic pole detection voltage level by the position detection method
For the magnetic pole detection by the position detection method, set the voltage level with [Pr. PL09 Magnetic pole detection voltage level]. For the magnetic pole detection by the minute position detection method, the voltage level setting is not required.

(a) Guideline of parameter settings
Set the parameters by referring to the following table.

[Pr. PL09] setting (Guide value) / Servo status	Small ← Medium → Large (10 or less (initial value) 50 or more)	
Torques required for operation	Small	Large
Overload, overcurrent alarm	Not frequently occurs	Frequently occurs
Magnetic pole detection alarm	Frequently occurs	Not frequently occurs
Magnetic pole detection accuracy	Low	High

(b) Setting procedure

1) Perform the magnetic pole detection, and increase the setting value of [Pr. PL09 Magnetic pole detection voltage level] until [AL. 50 Overload 1], [AL. 51 Overload 2], [AL. E1 Overload warning 1], and [AL. EC Overload warning 2] occur. Increase the setting value by five as a guide value. When these alarms and warnings occur during the magnetic pole detection by using MR Configurator2, the test operation of MR Configurator2 automatically completes and the servo-off status is established.

2) Specify the setting value that is an approximately 70% of the value set when [AL. 50 Overload 1], [AL. 51 Overload 2], [AL. E1 Overload warning 1], and [AL. EC Overload warning 2] occurred as the final setting value. However, if [AL. 27 Initial magnetic pole detection error] occurs with this value, specify a value intermediate between the value set at [AL. 50 Overload 1], [AL. 51 Overload 2], [AL. E1 Overload warning 1], or [AL. EC Overload warning 2] and the value set at the magnetic pole detection alarm as the final setting value.

3) Perform the magnetic pole detection again with the final setting value.

(c) Setting example

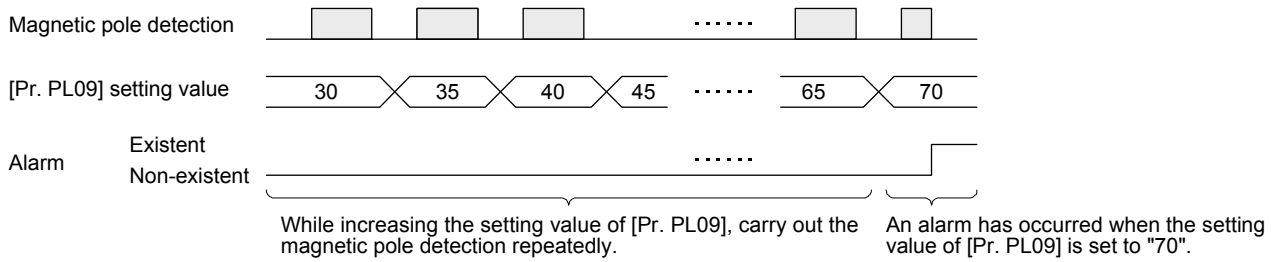

In this example, the final setting value of [Pr. PL09] is 49 (Setting value at the alarm occurrence = 70 × 0.7).

15.3.3 Operation from controller

To configure the absolute position detection system by using the direct drive motor, the battery and the absolute position storage unit MR-BTAS01 are required.

For the incremental system, the magnetic pole detection is automatically performed at the first servo-on after the power-on. For this reason, when performing the positioning operation, create the sequence which surely confirms the servo-on status as the inter lock condition of the positioning command.

15.3.4 Function

(1) Servo control error detection function

POINT
●For the servo control error detection function, the position and speed deviation error detections are enabled by default. ([Pr. PL04]: _ _ _ 3)

If the servo control gets unstable for some reasons, the direct drive motor may not operate properly. To detect this state and to stop operation, the servo control error detection function is used as a protective function.
The servo control error detection function has three different detection methods: the position deviation, speed deviation, and torque deviation. An error is detected when each method is enabled with [Pr. PL04 Linear servo motor/DD motor function selection 2]. The detection level can be changed with [Pr. PL05], [Pr. PL06], and [Pr. PL07].

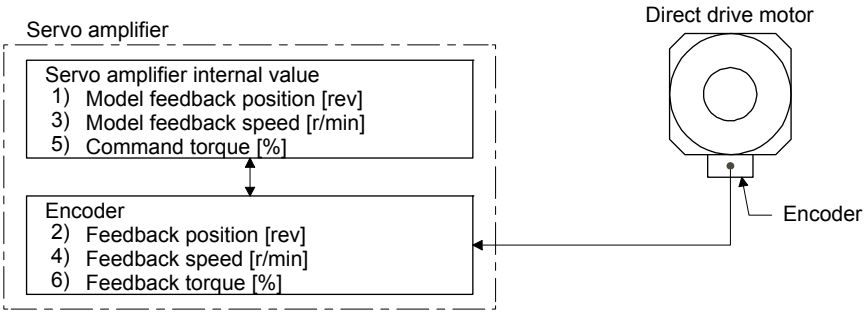

Figure 15.1 Outline of servo control error detection function

(a) Position deviation error detection
Set [Pr. PL04] to "_ _ _ 1" to enable the position deviation error detection.

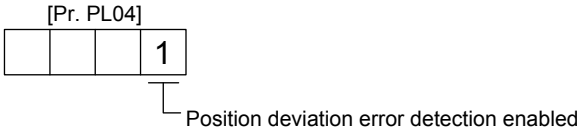

When you compare the model feedback position (1)) and the feedback position (2)) in figure 15.1, if the deviation is more than the value of [Pr. PL05 Position deviation error detection level] (1 (0.01 rev) to 1000 (10 rev)), [AL. 42.1 Servo control error by position deviation] will occur and the linear servo motor will stop. The initial value of this detection level is 0.09 rev. Replace the set value as required.

(b) Speed deviation error detection

Set [Pr. PL04] to "_ _ _ 2" to enable the speed deviation error detection.

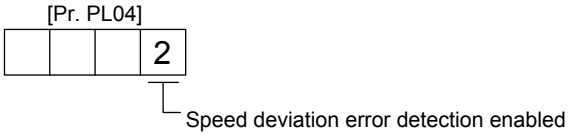

When you compare the model feedback speed (3)) and the feedback speed (4)) in figure 15.1, if the deviation is more than the value of [Pr. PL06 Speed deviation error detection level] (1 r/min to 2000 r/min), [AL. 42.2 Servo control error by speed deviation] will occur and the linear servo motor will stop. The initial value of this detection level is 100 r/min. Replace the set value as required.

(c) Torque deviation error detection level

Set [Pr. PL04] to "_ _ _ 4" to enable the torque deviation error detection.

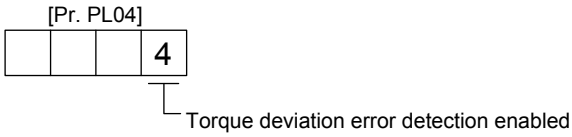

When you compare the command torque (5)) and the feedback torque (6)) in figure 15.1, if the deviation is more than the value of [Pr. PL07 Torque/thrust deviation error detection level] (1% to 1000%), [AL. 42.3 Servo control error by torque/thrust deviation] will occur and the linear servo motor will stop. The initial value of this detection level is 100%. Replace the set value as required.

(d) Detecting multiple deviation errors

When setting [Pr. PL04] as shown below, multiple deviation errors can be detected. For the error detection methods, refer to (1) (a), (b), (c) in this section.

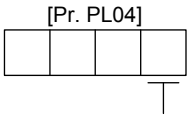

Setting value	Position deviation error detection	Speed deviation error detection	Torque deviation error detection
1	○		
2		○	
3	○	○	
4			○
5	○		○
6		○	○
7	○	○	○

15.4 Characteristics

15.4.1 Overload protection characteristics

An electronic thermal relay is built in the servo amplifier to protect the servo amplifier, the direct drive motor, and direct drive motor power wires from overloads.
[AL. 50 Overload 1] occurs if overload operation performed is above the electronic thermal relay protection curve shown in Fig. 15.2 [AL. 51 Overload 2] occurs if the maximum current is applied continuously for several seconds due to machine collision, etc. Use the equipment on the left-side area of the continuous or broken line in the graph.
When unbalanced torque is generated, such as in a vertical lift machine, the unbalanced torque of the machine should be kept at 70% or lower of the motor's rated torque.
This servo amplifier has solid-state direct drive motor overload protection for each axis. (The direct drive motor overload current (full load current) is set on the basis of 120% rated current of the servo amplifier.)

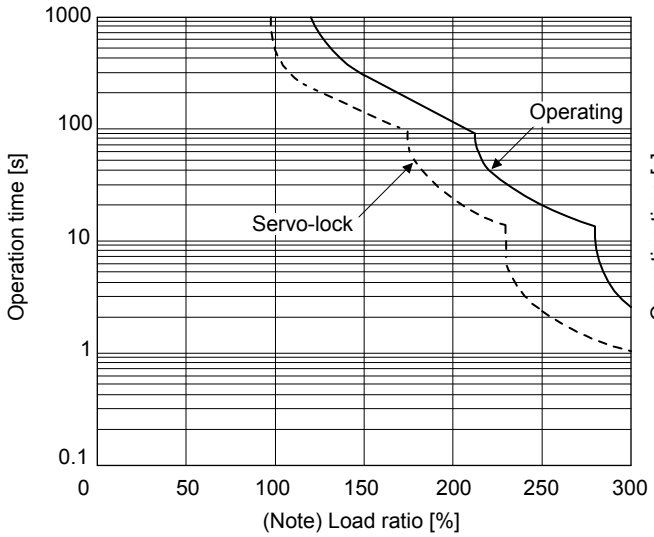

TM-RFM002C20/TM-RFM004C20/
TM-RFM006C20/TM-RFM006E20/
TM-RFM012E20/TM-RFM018E20/
TM-RFM012G20/TM-RFM040J10

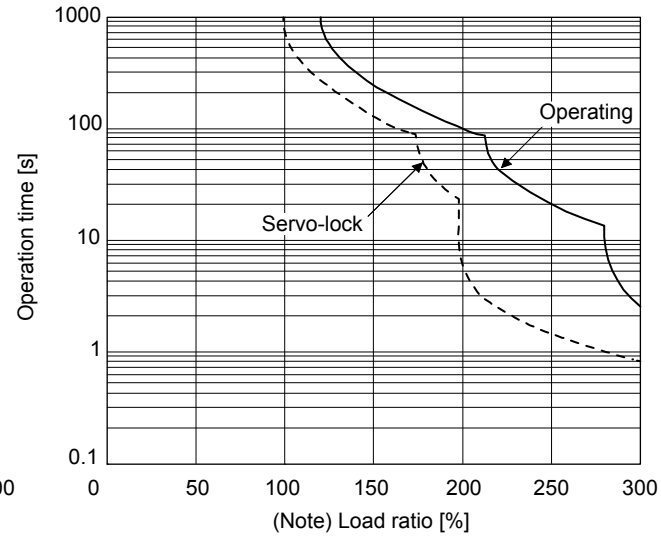

TM-RFM048G20/TM-RFM072G20/
TM-RFM120J10

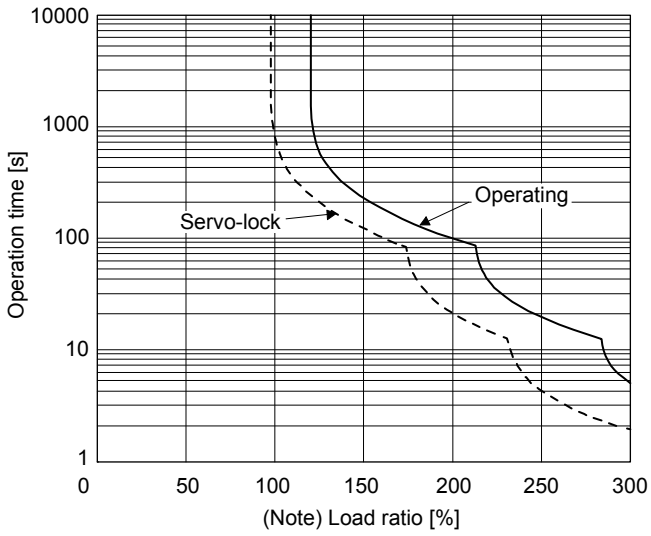

TM-RFM240J10

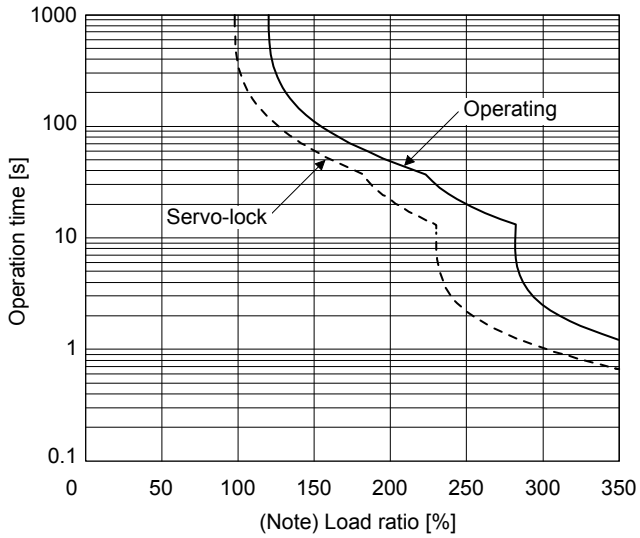

TM-RG2M004E30/TM-RU2M004E30/
TM-RG2M009G30/TM-RU2M009G30

Note. If operation that generates torque more than 100% of the rating is performed with an abnormally high frequency in a direct drive motor stop status (servo-lock status) or in a 50 r/min or less low-speed operation status, the servo amplifier may malfunction regardless of the electronic thermal relay protection.

Fig. 15.2 Electronic thermal relay protection characteristics

15.4.2 Power supply capacity and generated loss

Table 15.1 indicates servo amplifiers' power supply capacities and losses generated under rated load. For thermal design of an enclosed type cabinet, use the values in the table in consideration for the worst operating conditions. The actual amount of generated heat will be intermediate between values at rated torque and servo-off according to the duty used during operation. When the direct drive motor is run at less than the rated speed, the power supply capacity will be smaller than the value in the table, but the servo amplifier's generated heat will not change.

Table 15.1 Power supply capacity and generated loss per direct drive motor at rated output

Direct drive motor	Servo amplifier	Power supply capacity [kVA]	Servo amplifier-generated heat [W]		Area required for heat dissipation [m^2]
			At rated output	With servo-off	
TM-RG2M004E30	MR-J4-20TM MR-J4-20TM1	0.5	25	15	0.5
TM-RU2M004E30					
TM-RG2M004E30 (Note)	MR-J4-40TM MR-J4-40TM1	0.7	35	15	0.7
TM-RU2M004E30 (Note)					
TM-RG2M009G30	MR-J4-40TM MR-J4-40TM1	0.9	35	15	0.7
TM-RU2M009G30					
TM-RFM002C20	MR-J4-20TM MR-J4-20TM1	0.25	25	15	0.5
TM-RFM004C20	MR-J4-40TM MR-J4-40TM1	0.38	35	15	0.7
TM-RFM006C20	MR-J4-60TM	0.53	40	15	0.8
TM-RFM006E20		0.46	40	15	0.8
TM-RFM012E20	MR-J4-70TM	0.81	50	15	1.0
TM-RFM018E20	MR-J4-100TM	1.3	50	15	1.0
TM-RFM012G20	MR-J4-70TM	0.71	50	15	1.0
TM-RFM048G20	MR-J4-350TM	2.7	90	20	1.8
TM-RFM072G20	MR-J4-350TM	3.8	110	20	2.2
TM-RFM040J10	MR-J4-70TM	1.2	50	15	1.0
TM-RFM120J10	MR-J4-350TM	3.4	90	20	1.8
TM-RFM240J10	MR-J4-500TM	6.6	160	25	3.2

Note. The combination increases the rated torque and the maximum torque.

15.4.3 Dynamic brake characteristics

⚠CAUTION	●The coasting distance is a theoretically calculated value which ignores the running load such as friction. The calculated value will be longer than the actual distance. If an enough braking distance is not provided, a moving part may crash into the stroke end, which is very dangerous. Install the anti-crash mechanism such as an air brake or an electric/mechanical stopper such as a shock absorber to reduce the shock of moving parts.

POINT

●Do not use dynamic brake to stop in a normal operation as it is the function to stop in emergency.
●For a machine operating at the recommended load to motor inertia ratio or less, the estimated number of usage times of the dynamic brake is 1000 times while the machine decelerates from the rated speed to a stop once in 10 minutes.
●Be sure to enable EM1 (Forced stop 1) after the direct drive motor stops when using EM1 (Forced stop 1) frequently in other than emergency.

(1) Dynamic brake operation

(a) Calculation of coasting distance

Fig. 15.3 shows the pattern in which the servo motor comes to a stop when the dynamic brake is operated. Use equation 15.1 to calculate an approximate coasting distance to a stop. The dynamic brake time constant τ varies with the direct drive motor and machine operation speeds. (Refer to (1) (b) in this section.)

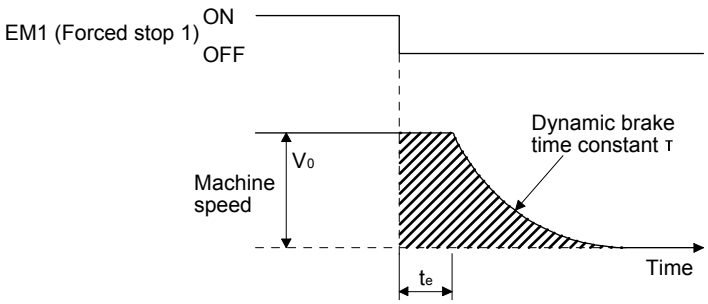

Fig. 15.3 Dynamic brake operation diagram

$$L_{max} = \frac{V_0}{60} \cdot \left\{ t_e + T\left(1 + \frac{J_L}{J_M}\right) \right\} \quad \cdots\cdots (15.1)$$

L_{max}: Maximum coasting distance [mm]
V_0: Machine's fast feed speed [mm/min]
J_M: Moment of inertia of direct drive motor [kg•cm^2]
J_L: Load moment of inertia converted into equivalent value on direct drive motor rotor [kg•cm^2]
τ: Dynamic brake time constant [s]
t_e: Delay time of control section [s]
There is internal relay delay time of about 10 ms.

(b) Dynamic brake time constant

The following shows necessary dynamic brake time constant τ for equation 15.1.

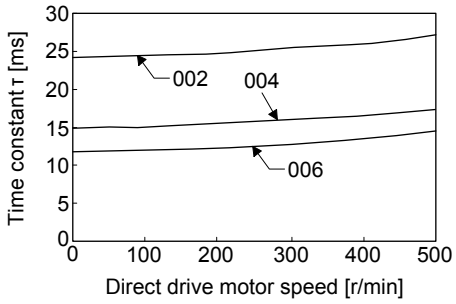

TM-RFM_C20

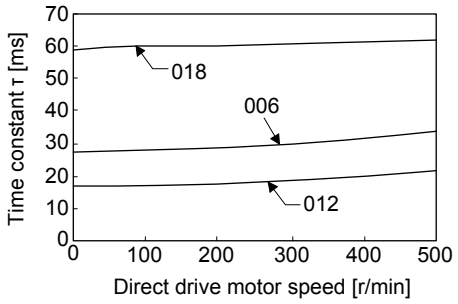

TM-RFM_E20

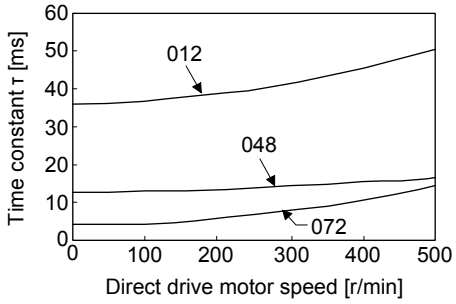

TM-RFM_G20

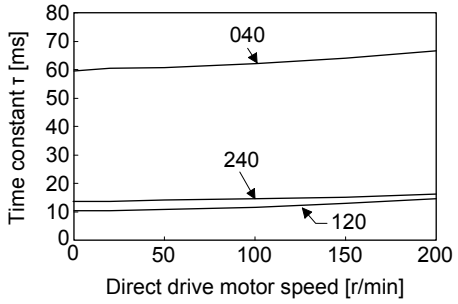

TM-RFM_J10

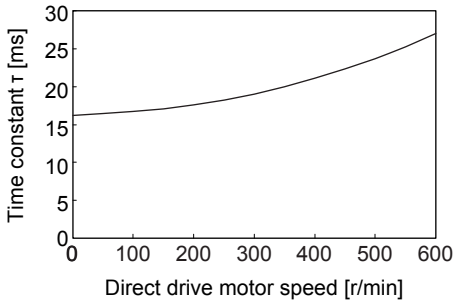

TM-RG2M004E30
TM-RU2M004E30

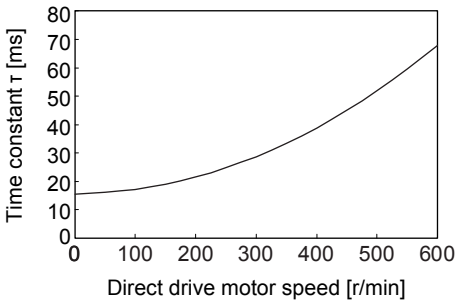

TM-RG2M009G30
TM-RU2M009G30

(2) Permissible load to motor inertia ratio when the dynamic brake is used

Use the dynamic brake under the load to motor inertia ratio indicated in the following table. If the load inertia moment is higher than this value, the dynamic brake may burn. If the load to motor inertia ratio exceeds the indicated value, contact your local sales office.

The values of the permissible load to motor inertia ratio in the table are the values at the maximum rotation speed of the direct drive motor.

The value in the parenthesis shows the value at the rated speed of the direct drive motor.

Direct drive motor	Permissible load to motor inertia ratio [multiplier]
TM-RFM_C20	100 (300)
TM-RFM_E20	
TM-RFM_G20	50 (300)
TM-RFM_J10	50 (200)
TM-RG2M_E30	20 (80)
TM-RG2M_G30	
TM-RU2M_E30	
TM-RU2M_G30	

MEMO

16. FULLY CLOSED LOOP SYSTEM

POINT
●When fully closed loop control system is used with this servo amplifier, "Linear Encoder Instruction Manual" is needed. ●Fully closed loop control system is available with position mode.

16.1 Functions and configuration

16.1.1 Function block diagram

A fully closed loop control block diagram is shown below. The fully closed loop system is controlled in the load-side encoder unit.

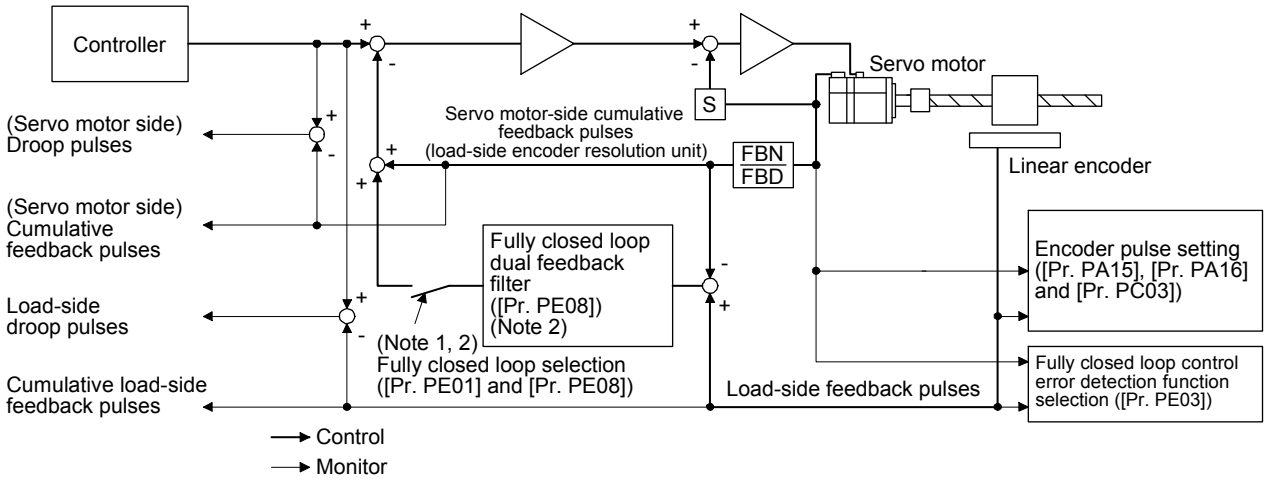

Note 1. Switching between semi closed loop control and fully closed loop control can be performed by changing the setting of [Pr. PE01].
When semi closed loop control is selected, a control is always performed on the bases of the position data of the servo motor encoder independently of whether the servo motor is at a stop or running.

2. When the fully closed loop system is enabled in [Pr. PE01], dual feedback control in which the servo motor feedback signal and load-side encoder feedback signal are combined by the dual feedback filter in [Pr. PE08] is performed.
In this case, fully closed loop control is performed when the servo motor is at a stop, and semi closed loop control is performed when the servo motor is operating to improve control performance. When "4500" is set as the filter value of [Pr. PE08 Dual feedback filter], fully closed loop control is always performed.

The following table shows the functions of each control mode.

Control	Description	
Semi closed loop control	Feature	Position is controlled according to the servo motor-side data.
	Advantage	Since this control is insusceptible to machine influence (such as machine resonance), the gains of the servo amplifier can be raised and the settling time shortened.
	Disadvantage	If the servo motor side is at a stop, the side may be vibrating or the load-side accuracy not obtained.
Dual feedback control	Feature	Position is controlled according to the servo motor-side data and load-side data.
	Advantage	Control is performed according to the servo motor-side data during operation, and according to the load side-data at a stop in sequence to raise the gains during operation and shorten the settling time. A stop is made with the load-side accuracy.
Fully closed loop control	Feature	Position is controlled according to the load-side data.
	Advantage	The load-side accuracy is obtained not only at a stop but also during operation.
	Disadvantage	Since this control is susceptible to machine resonance or other influences, the gains of the servo amplifier may not rise.

16.1.2 Selecting procedure of control mode

(1) Control mode configuration

In this servo, a semi closed loop system or fully closed loop system can be selected as a control system. In addition, on the fully closed loop system, the semi closed loop control, fully closed loop control and dual feedback control can be selected by the [Pr. PE08] settings.

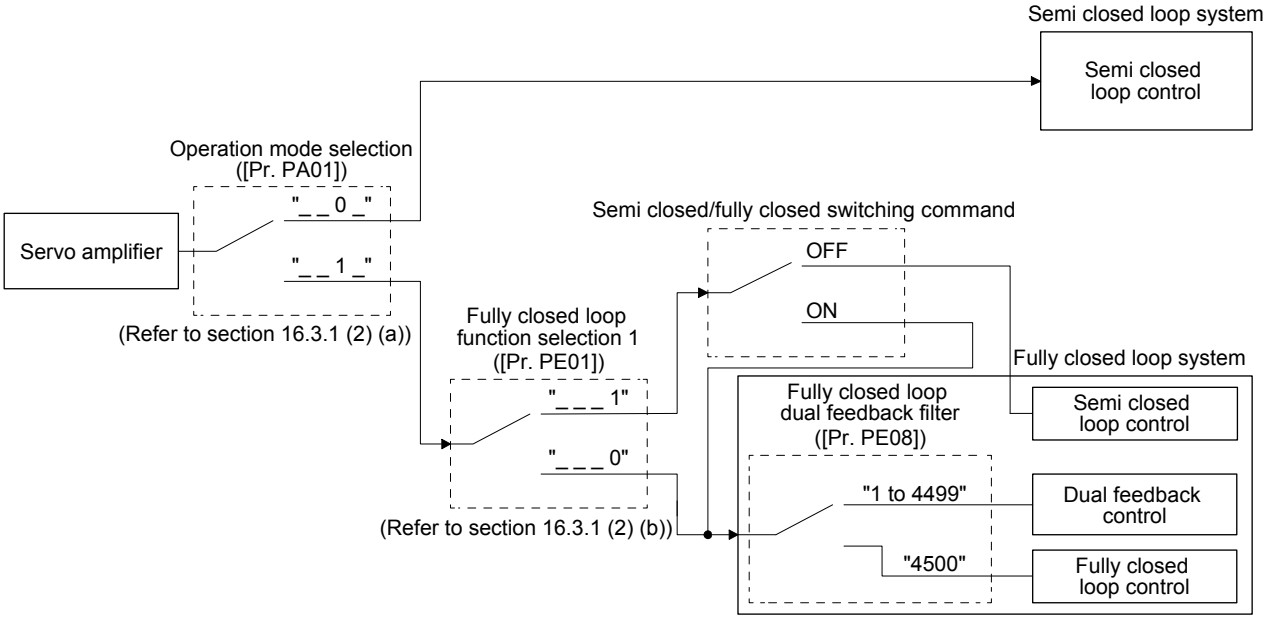

(2) Dual feedback filter equivalent block diagram

A dual feedback filter equivalent block diagram on the dual feedback control is shown below.

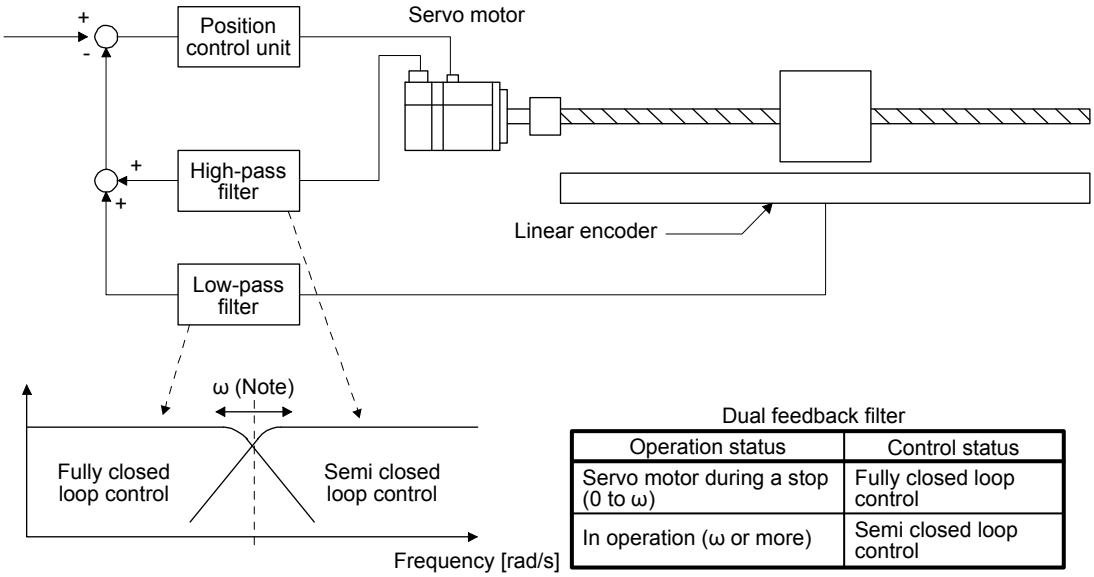

Dual feedback filter

Operation status	Control status
Servo motor during a stop (0 to ω)	Fully closed loop control
In operation (ω or more)	Semi closed loop control

Note. "ω" (a dual feedback filter band) is set by [Pr. PE08].

16.1.3 System configuration

(1) For a linear encoder

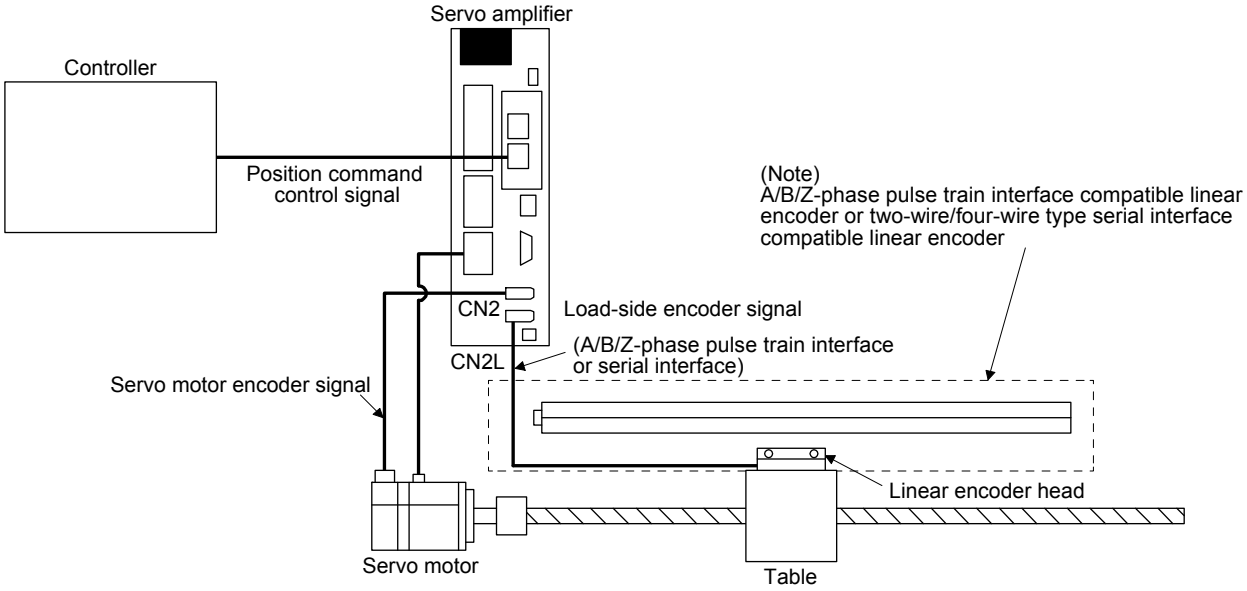

Note. Applicable for the absolute position detection system when an absolute position linear encoder is used.
In that case, a battery is not required.

(2) For a rotary encoder

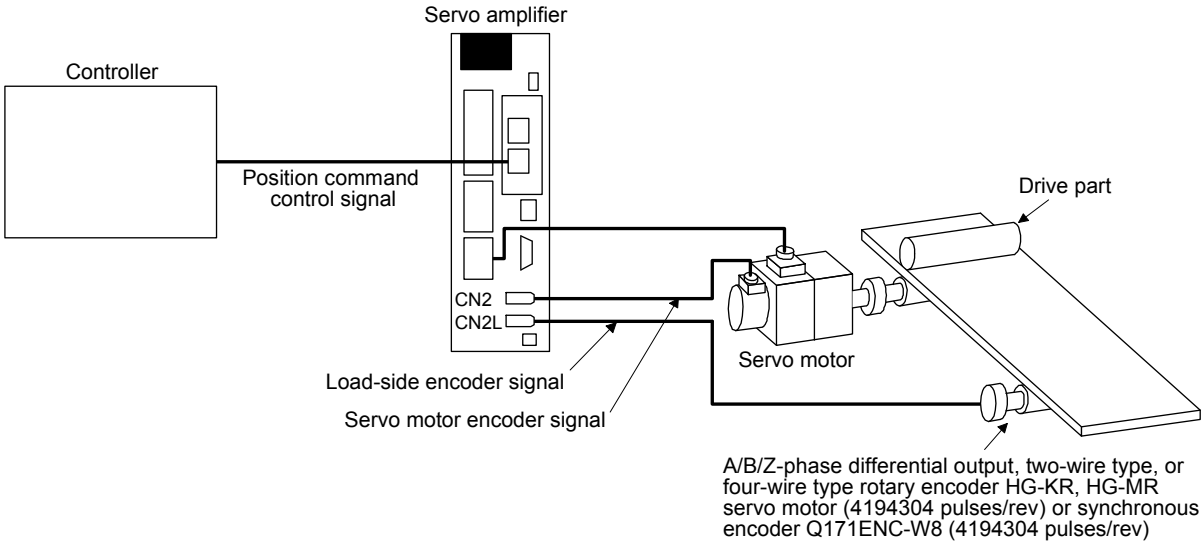

16.2 Load-side encoder

POINT
●Always use the load-side encoder cable introduced in this section. Using other products may cause a malfunction. ●For details of the load-side encoder specifications, performance and assurance, contact each encoder manufacturer.

16.2.1 Linear encoder

Refer to "Linear Encoder Instruction Manual" for usable linear encoders.

16.2.2 Rotary encoder

When a rotary encoder is used for the load-side encoder, use HG-KR or HG-MR servo motor as an encoder.

16.2.3 Configuration diagram of encoder cable

Configuration diagram for servo amplifier and load-side encoder is shown below. Cables used vary, depending on the load-side encoder.

(1) Linear encoder
Refer to "Linear Encoder Instruction Manual" for encoder cables for linear encoder.

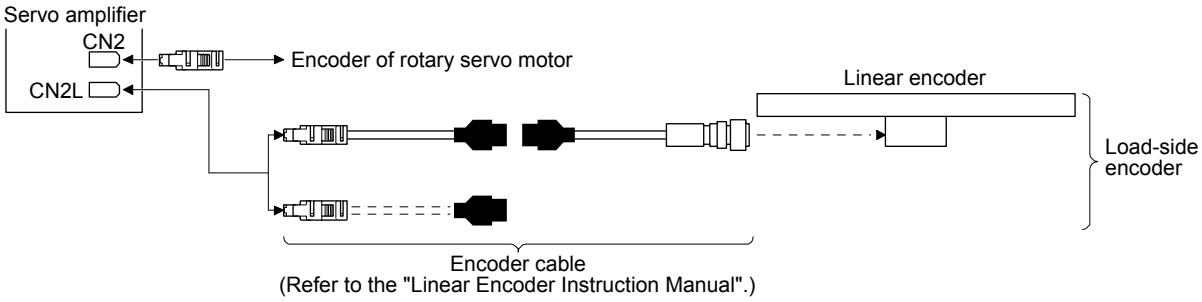

(2) Rotary encoder
Refer to "Servo Motor Instruction Manual (Vol.3)" for encoder cables for rotary encoder.

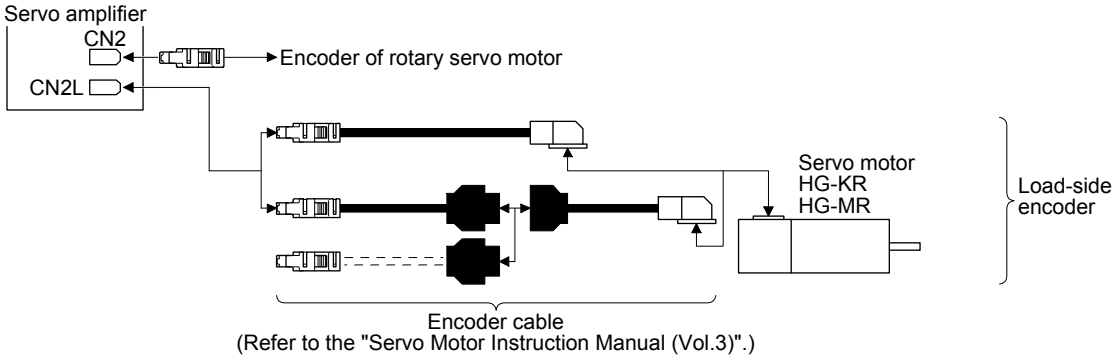

16.3 Operation and functions

16.3.1 Startup

(1) Startup procedure

Start up the fully closed loop system in the following procedure.

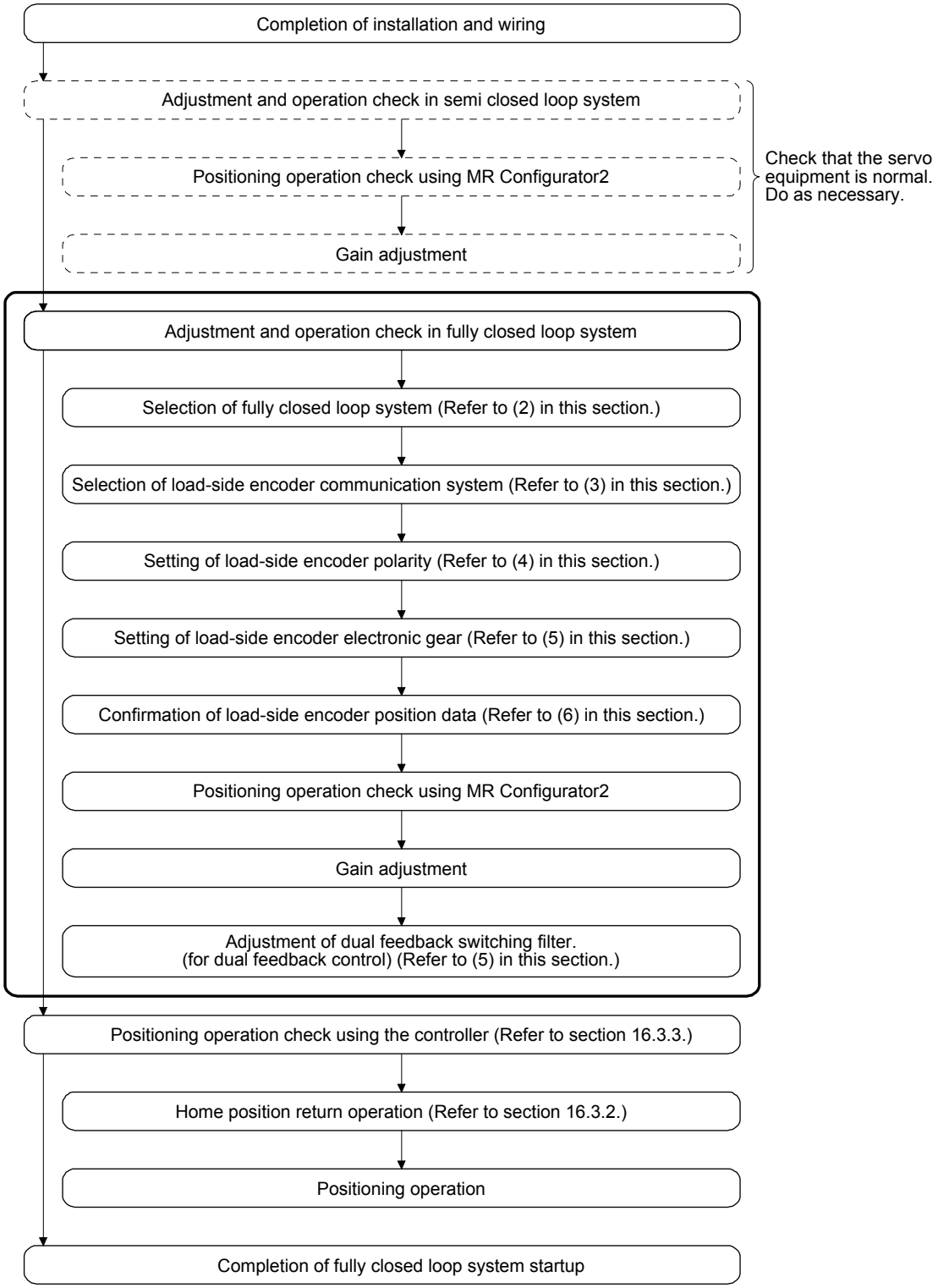

(2) Selection of fully closed loop system

By setting [Pr. PA01], [Pr. PE01] and the control command of controller, the control method can be selected as shown in the following table.

[Pr. PA01]	[Pr. PE01]	Semi closed loop control/ fully closed loop control switching signal	Command unit	Control System	Absolute position detection system
"_ _ 0 _" Semi closed loop system (standard control mode)			Servo motor encoder unit	Semi closed loop control	○
"_ _ 1 _" Fully closed loop system (fully closed loop control mode)	"_ _ _ 0"		Load-side encoder unit	Dual feedback control (fully closed loop control)	○ (Note)
	"_ _ _ 1"	Off		Semi closed loop control	×
		On		Dual feedback control (fully closed loop control)	×

Note. Applicable when the load-side encoder is set as the absolute position encoder.

(a) Operation mode selection

Select a operation mode.

[Pr. PA01]

1	0		0

Operation mode selection

Set value	Operation mode	Control unit
0	Semi closed loop system (Standard control mode)	Servo motor-side resolution unit
1	Fully closed loop system (Fully closed loop control mode)	Load-side encoder resolution unit

(b) Semi closed loop control/fully closed loop control selection

Select the semi closed loop control/fully closed loop control.

[Pr. PE01]

0	0	0	

Fully closed loop control selection
0: Always enabled
1: Switching by fully closed loop selection command from controller (C_CLD) and Input device CLD (Fully closed loop control selection)

Fully closed loop selection		Control method
Command from controller (C_CLD)	CLD (Fully closed loop selection) (Note)	
Off	Off	Semi closed loop control
On	Off	Fully closed loop control
Off	On	
On	On	

Note. It is always off when CLD (Fully closed loop selection) is not assigned in [Pr. PD03] to [Pr. PD05].

To enable the setting, select "Fully closed loop control mode (_ _ 1 _)" of "operation mode selection" in [Pr. PA01].
When "Absolute position detection system" is "Enabled (_ _ _ 1)" in [Pr. PA03], setting "1" will trigger [AL. 37 Parameter error].
When selecting "Profile mode (_ _ _ 2)" of "control mode selection" in [Pr. PA01], setting "1" will trigger [AL. 37 Parameter error].

(3) Selection of load-side encoder communication method

The communication method changes depending on the load-side encoder type. Refer to table 1.1 and "Linear Encoder Instruction Manual" for the communication method for each load-side encoder.
Select the cable to be connected to CN2L connector in [Pr. PC26].

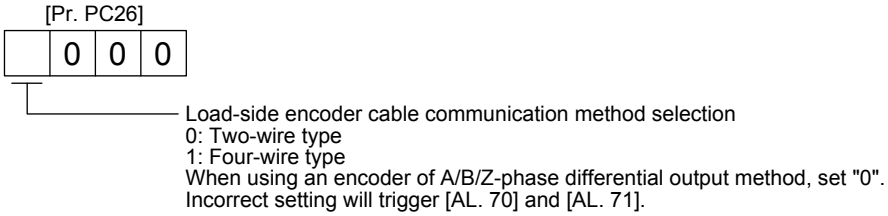

(4) Setting of load-side encoder polarity

⚠CAUTION

- Do not set an incorrect direction to "Encoder pulse count polarity selection" in [Pr. PC27]. An abnormal operation and a machine collision may occur if an incorrect direction is set, which cause a fault and parts damaged.

POINT

- "Encoder pulse count polarity selection" in [Pr. PC27] is not related to [Pr. PA14 Rotation direction selection]. Make sure to set the parameter according to the relationships between servo motor and linear encoder/rotary encoder.
- Do not set an incorrect direction to "Encoder pulse count polarity selection" in [Pr. PC27]. Doing so may cause [AL. 42 Fully closed loop control error] during the positioning operation.

(a) Parameter setting method

Set the load-side encoder polarity to be connected to CN2L connector in order to match the CCW direction of servo motor and the increasing direction of load-side encoder feedback.

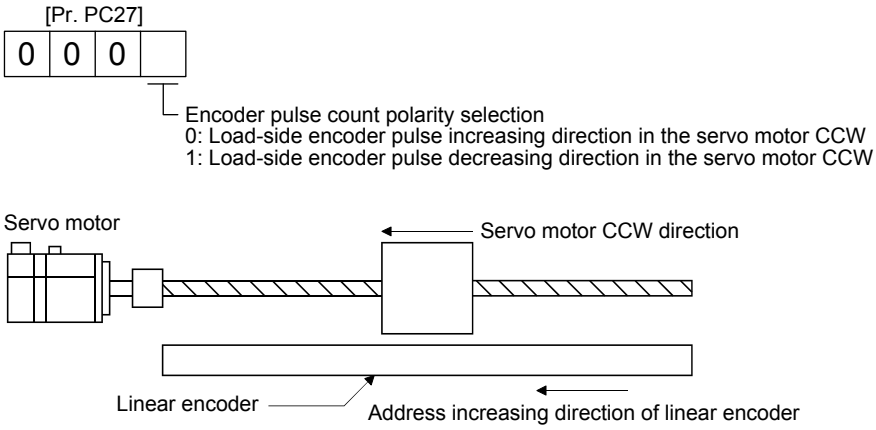

(b) How to confirm the load-side encoder feedback direction

For the way of confirming the load-side encoder feedback direction, refer to (6) in this section.

(5) Setting of feedback pulse electronic gear

> POINT
>
> ●If an incorrect value is set in the feedback pulse electronic gear ([Pr. PE04], [Pr. PE05], [Pr. PE34], and [Pr. PE35]), [AL. 37 Parameter error] and an abnormal operation may occur. Also, it may cause [AL. 42.8 Fully closed loop control error by position deviation] during the positioning operation.

The numerator ([Pr. PE04] and [Pr. PE34]) and denominator ([Pr. PE05] and [Pr. PE35]) of the electronic gear are set to the servo motor-side encoder pulse. Set the electronic gear so that the number of servo motor encoder pulses per servo motor revolution is converted to the number of load-side encoder pulses. The relational expression is shown below.

$$\frac{[\text{Pr. PE04}] \times [\text{Pr. PE34}]}{[\text{Pr. PE05}] \times [\text{Pr. PE35}]} = \frac{\text{Number of load-side encoder pulses per servo motor revolutio}}{\text{Number of motor encoder pulses per servo motor revolution}}$$

Select the load-side encoder so that the number of load-side encoder pulses per servo motor revolution is within the following range.

4096 (2^{12}) ≤ Number of load-side encoder pulses per servo motor revolution ≤ 67108864 (2^{26})

(a) When the servo motor is directly coupled with a ball screw and the linear encoder resolution is 0.05 μm

Conditions
Servo motor resolution: 4194304 pulses/rev
Servo motor reduction ratio: 1/11
Ball screw lead: 20 mm
Linear encoder resolution: 0.05 μm

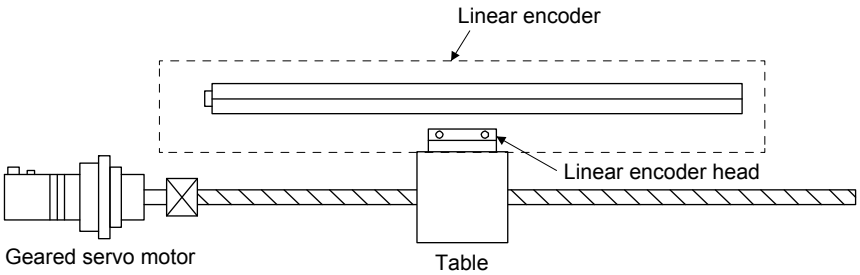

Calculate the number of linear encoder pulses per ball screw revolution.

Number of linear encoder pulses per ball screw revolution
= Ball screw lead/linear encoder resolution
= 20 mm/0.05 μm = 400000 pulses

$$\frac{[\text{Pr. PE04}] \times [\text{Pr. PE34}]}{[\text{Pr. PE05}] \times [\text{Pr. PE35}]} = \frac{400000}{4194304} \times \frac{1}{11} = \frac{3125}{32768} \times \frac{1}{11}$$

(b) Setting example when using the rotary encoder for the load-side encoder of roll feeder

Conditions
Servo motor resolution: 4194304 pulses/rev
Pulley diameter on the servo motor side: 30 mm
Pulley diameter on the rotary encoder side: 20 mm
Rotary encoder resolution: 4194304 pulse/rev

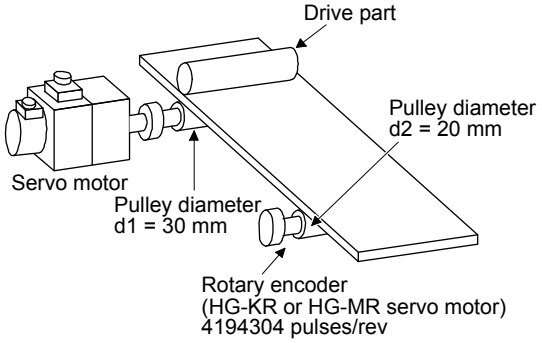

When the pulley diameters or reduction ratios differ, consider that in calculation.

$$\frac{[\text{Pr. PE04}] \times [\text{Pr. PE34}]}{[\text{Pr. PE05}] \times [\text{Pr. PE35}]} = \frac{4194304 \times 30}{4194304 \times 20} = \frac{1}{1} \times \frac{3}{2}$$

(6) Confirmation of load-side encoder position data
Check the load-side encoder mounting and parameter settings for any problems.

> POINT
> ●Depending on the check items, MR Configurator2 may be used.
> Refer to section 16.3.9 for the data displayed on the MR Configurator2.

When checking the following items, the fully closed loop control mode must be set. For the setting of control mode, refer to (2) in this section.

No.	Check item	Confirmation method and description
1	Read of load-side encoder position data	With the load-side encoder in a normal state (mounting, connection, etc.), the load-side cumulative feedback pulses value is counted normally when the load-side encoder is moved. 1. An alarm occurred. 2. The installation of the load-side encoder was not correct. 3. The encoder cable was not wired correctly.
2	Read of load-side encoder home position (reference mark, Z-phase)	With the home position (reference mark, or Z-phase) of the load-side encoder in a normal condition (mounting, connection, etc.), the value of load-side encoder information 1 is cleared to 0 when the home position (reference mark, or Z-phase) is passed through by moving the load-side encoder. 1. The installation of the load-side encoder was not correct. 2. The encoder cable was not wired correctly.
3	Confirmation of load-side encoder feedback direction (Setting of load-side encoder polarity)	Confirm that the directions of the cumulative feedback pulses of servo motor encoder (after gear) and the load-side cumulative feedback pulses are matched by moving the device (load-side encoder) manually in the servo-off status. If mismatched, reverse the polarity.
4	Setting of load-side encoder electronic gear	When the servo motor and load-side encoder operate synchronously, the servo motor-side cumulative feedback pulses (after gear) and load-side cumulative feedback pulses are matched and increased. If mismatched, review the setting of fully closed loop control feedback electronic gear ([Pr. PE04], [Pr. PE05], [Pr. PE34], and [Pr. PE35]) with the following method. 1) Check the servo motor-side cumulative feedback pulses (before gear). 2) Check the load-side cumulative feedback pulses. 3) Check that the ratio of above 1) and 2) has been that of the feedback electronic gear. 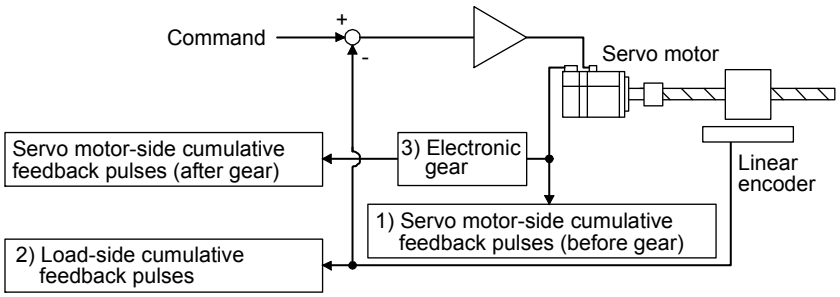

(7) Setting of fully closed loop dual feedback filter

With the initial value (setting = 10) set in [Pr. PE08 Fully closed loop dual feedback filter the dual feedback filter], make gain adjustment by auto tuning, etc. as in semi closed loop control. While observing the servo operation waveform with the graph function, etc. of MR Configurator2, adjust the dual feedback filter.

The dual feedback filter operates as described below depending on the setting.

[Pr. PE08] setting	Control mode	Vibration	Settling time
1 to 4499	Dual feedback	Not frequently occurs to Frequently occurs	Long time to Short time
4500	Fully closed loop		

Increasing the dual feedback filter setting shortens the settling time, but increases servo motor vibration since the motor is more likely to be influenced by the load-side encoder vibration. The maximum setting of the dual feedback filter should be less than half of the PG2 setting.

Reduction of settling time: Increase the dual feedback filter setting.

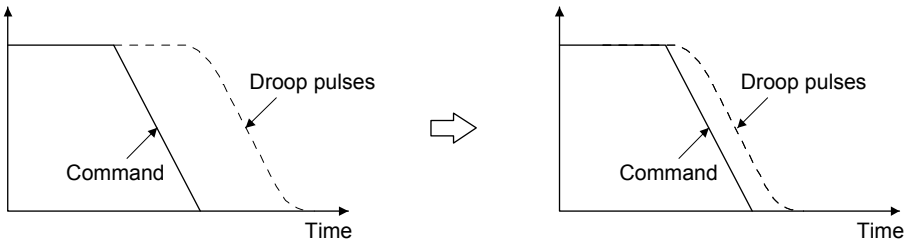

Suppression of vibration: Decrease the dual feedback filter setting.

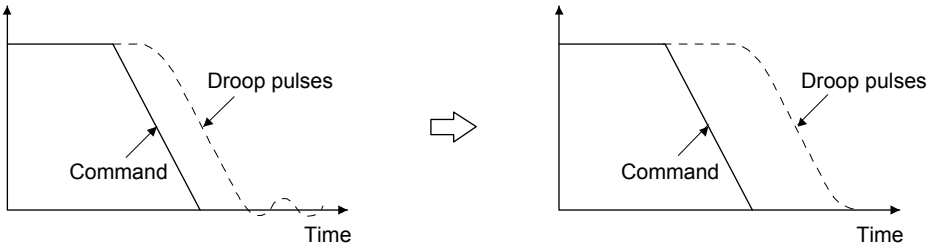

16.3.2 Home position return

(1) General instruction

Home position return is all performed according to the load-side encoder feedback data, independently of the load-side encoder type. It is irrelevant to the Z-phase position of the servo motor encoder. In the case of a home position return using a dog signal, the home position (reference mark) must be passed through when an incremental type linear encoder is used, or the Z-phase be passed through when a rotary encoder is used, during a period from a home position return start until the dog signal turns off.

(2) Load-side encoder types and home position return methods

(a) About proximity dog type home position return using absolute type linear encoder

When an absolute type linear encoder is used, the home position reference position is the position per servo motor revolution to the linear encoder home position (absolute position data = 0).

In the case of a proximity dog type home position return, the nearest position after proximity dog off is the home position.

The linear encoder home position may be set in any position.

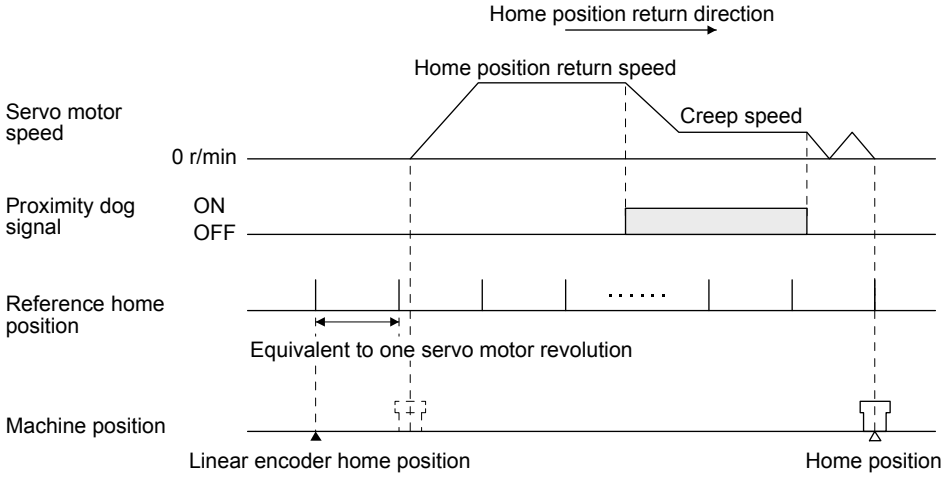

(b) About proximity dog type home position return using incremental linear encoder

1) When the linear encoder home position (reference mark) exists in the home position return direction

When an incremental linear encoder is used, the home position is the position per servo motor revolution to the linear encoder home position (reference mark) passed through first after a home position return start.

In the case of a dog type home position return, after the proximity dog signal rear end is detected, the nearest home position reference position shifted by the home position shift distance is used as the home position.

Set one linear encoder home position in the full stroke, and set it in the proximity dog signal detection position.

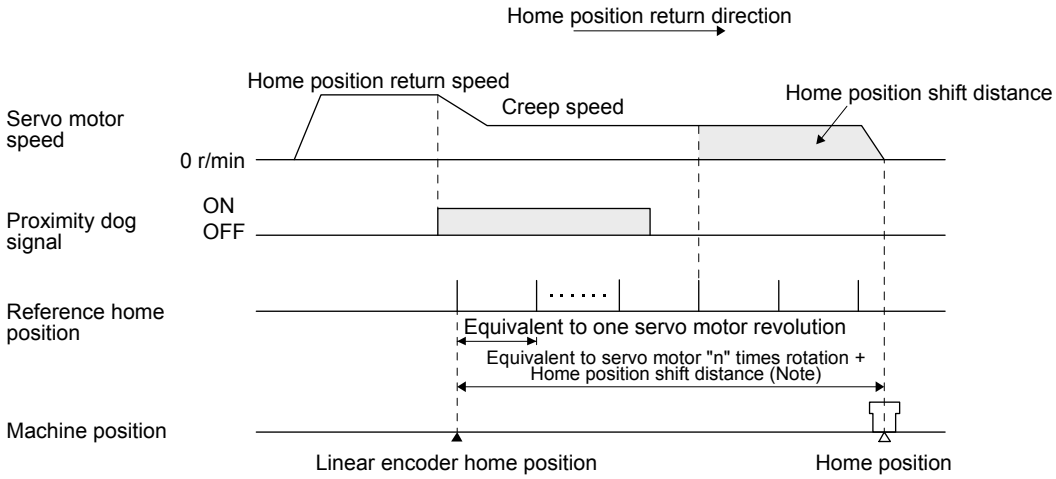

Note. Home position shift distance can be changed with [Pr. PT07] and [Pr. PT69].

2) When the linear encoder home position does not exist in the home position return direction

> POINT
>
> ●To execute a home position return securely, start a home position return after moving the axis to the opposite stroke end by jog operation, etc. of the controller.
>
> ●If the incremental linear encoder does not have a linear encoder home position (reference mark), only the home position return type without using Z-phase can be performed.

If the home position return is performed from the position where the linear encoder home position does not exist in the home position return direction, an error may occur depending on the home position return type. In this case, change the home position return type, or move the mover to the stroke end on the opposite side of the home position return direction with the JOG operation from the controller and others, and then perform a home position return.

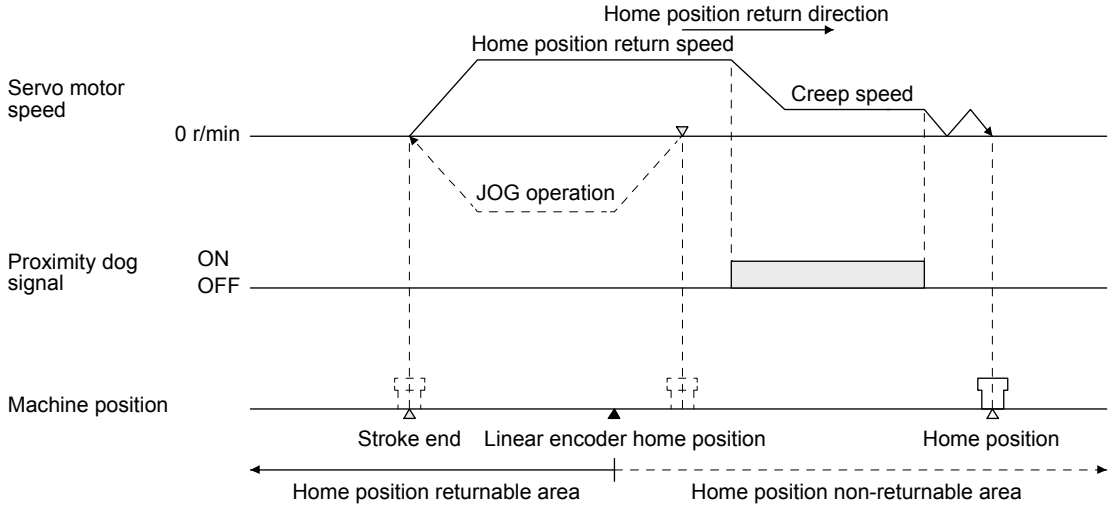

(c) About dog type home position return when using the rotary encoder of a serial communication servo motor

The home position for when using the rotary encoder of a serial communication servo motor for the load-side encoder is at the load-side Z-phase position.

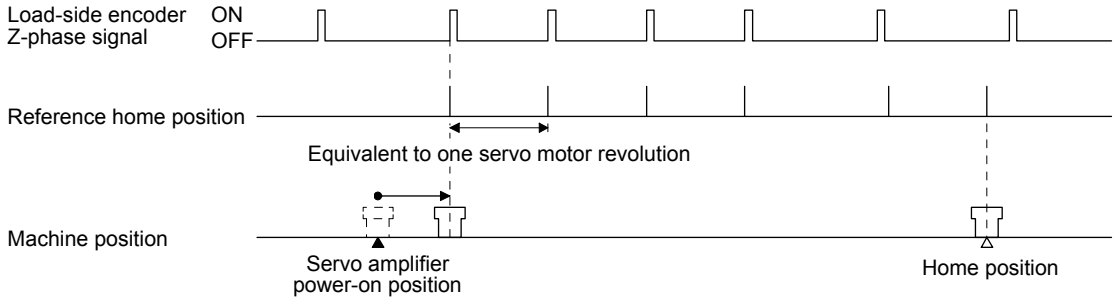

16.3.3 Operation from controller

An absolute type linear encoder is necessary to configure an absolute position detection system under fully closed loop control using a linear encoder. In this case, the encoder battery need not be installed to the servo amplifier. When an rotary encoder is used, an absolute position detection system can be configured by installing the encoder battery to the servo amplifier. In this case, the battery life will be shorter because the power consumption is increased as the power is supplied to the two encoders of motor side and load side.

Positioning operation from the controller is basically performed like the semi closed loop control.

16.3.4 Fully closed loop control error detection functions

If fully closed loop control becomes unstable for some reason, the speed at servo motor side may increase abnormally. The fully closed loop control error detection function is a protective function designed to pre-detect it and stop operation.
The fully closed loop control error detection function has two different detection methods, speed deviation and position deviation, and errors are detected only when the corresponding functions are enabled by setting [Pr. PE03 Fully closed loop function selection 2].
The detection level setting can be changed using [Pr. PE06] and [Pr. PE07].

(1) Parameter
The fully closed loop control error detection function is selected.

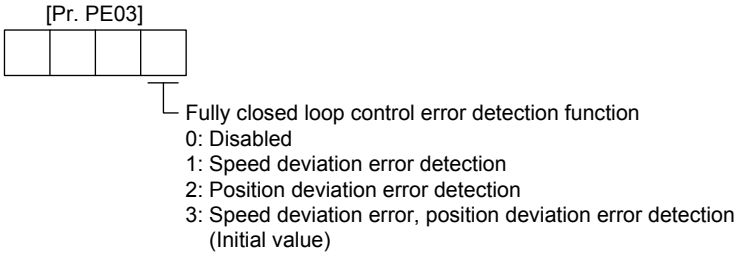

(2) Fully closed loop control error detection functions

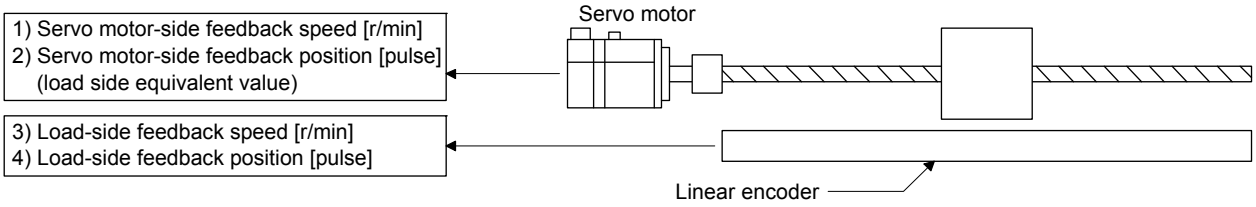

(a) Speed deviation error detection
Set [Pr. PE03] to "_ _ _ 1" to enable the speed deviation error detection.

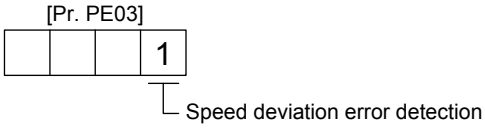

The function compares the servo motor-side feedback speed (1)) and load-side feedback speed (3)). If the deviation is not less than the set value (1 r/min to the permissible speed) of [Pr. PE06 Fully closed loop control speed deviation error detection level], the function generates [AL. 42.2 Servo control error by speed deviation] and stops. The initial value of [Pr. PE06] is 400 r/min. Change the set value as required.

(b) Position deviation error detection
Set [Pr. PE03] to "_ _ _ 2" to enable the position deviation error detection.

[Pr. PE03]

			2

Position deviation error detection

Comparing the servo motor-side feedback position (2)) and load-side feedback position (4)), if the deviation is not less than the set value (1 kpulses to 20000 kpulses) of [Pr. PE07 Fully closed loop control position deviation error detection level], the function generates [AL. 42.1 Servo control error by position deviation] and stops. The initial value of [Pr. PE07] is 100 kpulses. Change the set value as required.

(c) Detecting multiple deviation errors
When setting [Pr. PE03] as shown below, multiple deviation errors can be detected. For the error detection method, refer to (2) (a), (b) in this section.

[Pr. PE03]

Setting value	Speed deviation error detection	Position deviation error detection
1	○	
2		○
3	○	○

16.3.5 Auto tuning function

Refer to section 6.3 for the auto tuning function.

16.3.6 Machine analyzer function

Refer to Help of MR Configurator2 for the machine analyzer function of MR Configurator2.

16.3.7 Test operation mode

Test operation mode is enabled by MR Configurator2.
For details on the test operation mode, refer to section 4.5.

Function	Item	Usability	Remark
Test operation mode	JOG operation	○	It drives in the load-side encoder resolution unit
	Positioning operation	○	The fully closed loop system is operated in the load-side encoder resolution unit. Refer to section 4.5.1 (1) (b) for details.
	Program operation	○	The fully closed loop system is operated in the load-side encoder resolution unit. Refer to section 4.5.1 (1) (c) for details.
	Output signal (DO) forced output	○	Refer to section 4.5.1 (1) (d).
	Motor-less operation		
	Single-step feed	○	The fully closed loop system is operated in the load-side encoder resolution unit. Refer to section 4.5.1 (1) (e) for details.

16.3.8 Absolute position detection system under fully closed loop system

An absolute type linear encoder is necessary to configure an absolute position detection system under fully closed loop control using a linear encoder. In this case, the encoder battery need not be installed to the servo amplifier. When an rotary encoder is used, an absolute position detection system can be configured by installing the encoder battery to the servo amplifier. In this case, the battery life will be shorter because the power consumption is increased as the power is supplied to the two encoders of motor side and load side. For the absolute position detection system with linear encoder, the restrictions mentioned in this section apply. Enable the absolute position detection system with [Pr. PA03 Absolute position detection system] and use this servo within the following restrictions.

(1) Using conditions

(a) Use an absolute type linear encoder with the load-side encoder.

(b) Select Always fully closed loop ([Pr. PA01] = _ _ 1 _ and [Pr. PE01] = _ _ _ 0).

(2) Absolute position detection range using encoder

Encoder type	Absolute position detection enabled range
Linear encoder (Serial Interface)	Movable distance range of linear encoder (within 32-bit absolute position data)

(3) Alarm detection

The absolute position-related alarm ([AL. 25]) and warnings (AL. 92] and [AL. 9F]) are not detected.

16.3.9 About MR Configurator2

Using MR Configurator2 can confirm if the parameter setting is normal or if the servo motor and the load-side encoder operate properly.
This section explains the fully closed diagnosis screen.
Click "Monitor start" to constantly read the monitor display items from the servo amplifier.
Then, click "Monitor stop" to stop reading. Click "Parameter read" to read the parameter items from the servo amplifier, and then click "Parameter write" to write them.

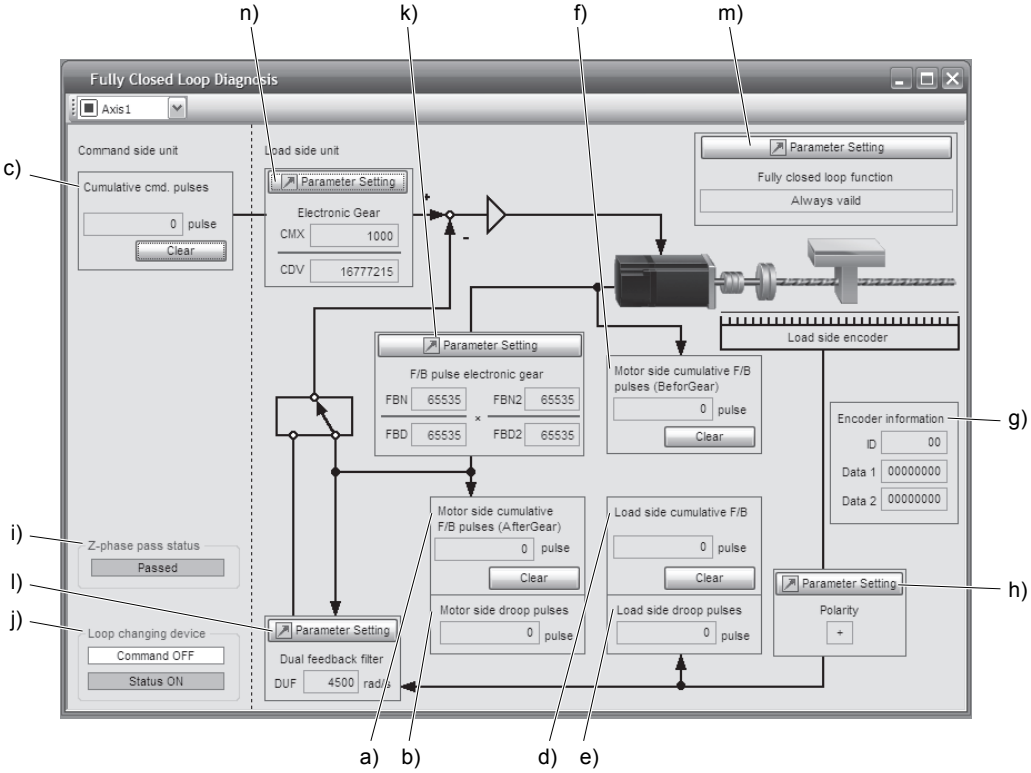

Symbol	Name	Explanation	Unit
a)	Motor side cumu. feedback pulses (after gear)	Feedback pulses from the servo motor encoder are counted and displayed. (load-side encoder unit) When the set value exceeds 999999999, it starts with 0. Click "Clear" to reset the value to 0. The "-" symbol is indicated for reverse.	pulse
b)	Motor side droop pulses	Droop pulses of the deviation counter between a servo motor-side position and a command are displayed. The "-" symbol is indicated for reverse.	pulse
c)	Cumu. Com. pulses	Position command input pulses are counted and displayed. Click "Clear" to reset the value to 0. The "-" symbol is indicated for reverse command.	pulse
d)	Load side cumu. feedback pulses	Feedback pulses from the load-side encoder are counted and displayed. When the set value exceeds 999999999, it starts with 0. Click "Clear" to reset the value to 0. The "-" symbol is indicated for reverse.	pulse
e)	Load side droop pulses	Droop pulses of the deviation counter between a load-side position and a command are displayed. The "-" symbol is indicated for reverse.	pulse
f)	Motor side cumu. feedback pulses (before gear)	Feedback pulses from the servo motor encoder are counted and displayed. (Servo motor encoder unit) When the set value exceeds 999999999, it starts with 0. Click "Clear" to reset the value to 0. The "-" symbol is indicated for reverse.	pulse

Symbol	Name	Explanation	Unit
g)	Encoder information	The load-side encoder information is displayed. The display contents differ depending on the load-side encoder type. ・ID: The ID No. of the load-side encoder is displayed. ・Data 1: For the incremental type linear encoder, the counter from powering on is displayed. For the absolute position type linear encoder, the absolute position data is displayed. ・Data 2: For the incremental type linear encoder, the distance (number of pulses) from the reference mark (Z-phase) is displayed. For the absolute position type linear encoder, "00000000" is displayed.	
h)	Polarity	For address increasing direction in the servo motor CCW, it is indicated as "+" and for address decreasing direction in the servo motor CCW, as "-".	
i)	Z phase pass status	If the fully closed loop system is "Disabled", the Z-phase pass status of the servo motor encoder is displayed. If the fully closed loop system is "Enabled" or "Semi closed loop control/fully closed loop control switching", the Z-phase pass status of the load-side encoder is displayed.	
j)	Fully closed loop changing device	Only if the fully closed loop system is "Semi closed loop control/fully closed loop control switching", the device is displayed. The state of the semi closed loop control/fully closed loop control switching signal and the inside state during selection are displayed.	
k)	Parameter (Feedback pulse electronic gear)	The feedback pulse electronic gears ([Pr. PE04], [Pr. PE05], [Pr. PE34], and [Pr. PE35]) are displayed/set for servo motor encoder pulses in this parameter. (Refer to section 16.3.1 (5).)	
l)	Parameter (Dual feedback filter)	The band of [Pr. PE08 Fully closed loop dual feedback filter] is displayed/set in this parameter.	
m)	Parameter (fully closed loop selection)	The parameter for the fully closed loop control is displayed or set. Click "Parameter setting" to display the "Fully closed loop control-Basic" window. 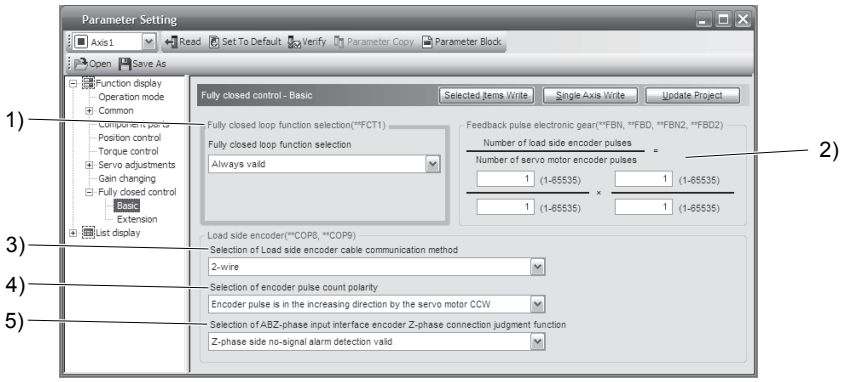 1) Fully closed loop selection ([Pr. PE01]) "Always valid" or "Change according to fully closed selection signal" is selected here. 2) Feedback pulse electronic gear ([Pr. PE04], [Pr. PE05], [Pr. PE34], [Pr. PE35]) Setting of feedback pulse electronic gear 3) Load-side encoder cable communication method selection ([Pr. PC26]) 4) Selection of encoder pulse count polarity ([Pr. PC27]) Polarity of the load-side encoder information is selected. 5) Selection of A/B/Z-phase input interface encoder Z-phase connection judgment function ([Pr. PC27]) Select the non-signal detection status for the pulse train signal from the A/B/Z-phase input interface encoder used as a linear encoder or load-side encoder.	
n)	Parameter (electronic gear)	Electronic gear ([Pr. PA06], [Pr. PA07]) This is used to set parameters for the electronic gear.	

MEMO

17. APPLICATION OF FUNCTIONS

This chapter explains the application of using servo amplifier functions.

17.1 Scale measurement function

The function transmits position information of a scale measurement encoder to the controller by connecting the scale measurement encoder in semi closed loop control.

POINT

- The scale measurement function is available with servo amplifiers with software version B0 or later.
- For PROFINET, the scale measurement function is not available.
- When a linear encoder is used as a scale measurement encoder with this servo amplifier, the "Linear Encoder Instruction Manual" is necessary.
- For the controller settings to use the scale measurement function, refer to respective communication method manuals of "MR-J4-_TM_ Servo Amplifier Instruction Manual".

17.1.1 Functions and configuration

(1) Function block diagram

The following shows a block diagram of the scale measurement function. The control will be performed in units of encoders of the servo motor for the scale measurement function.

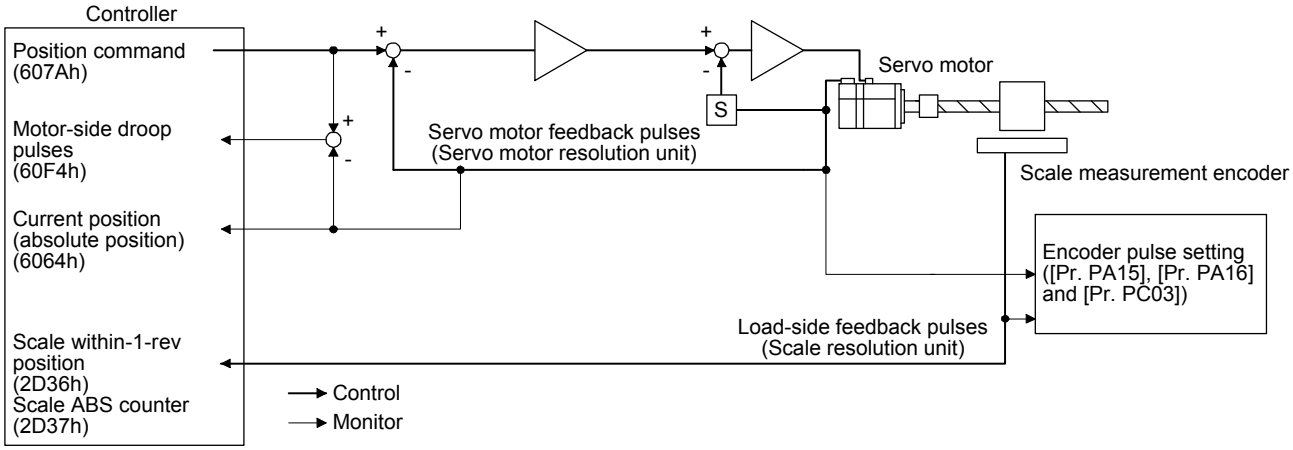

(2) System configuration

(a) When using linear encoders

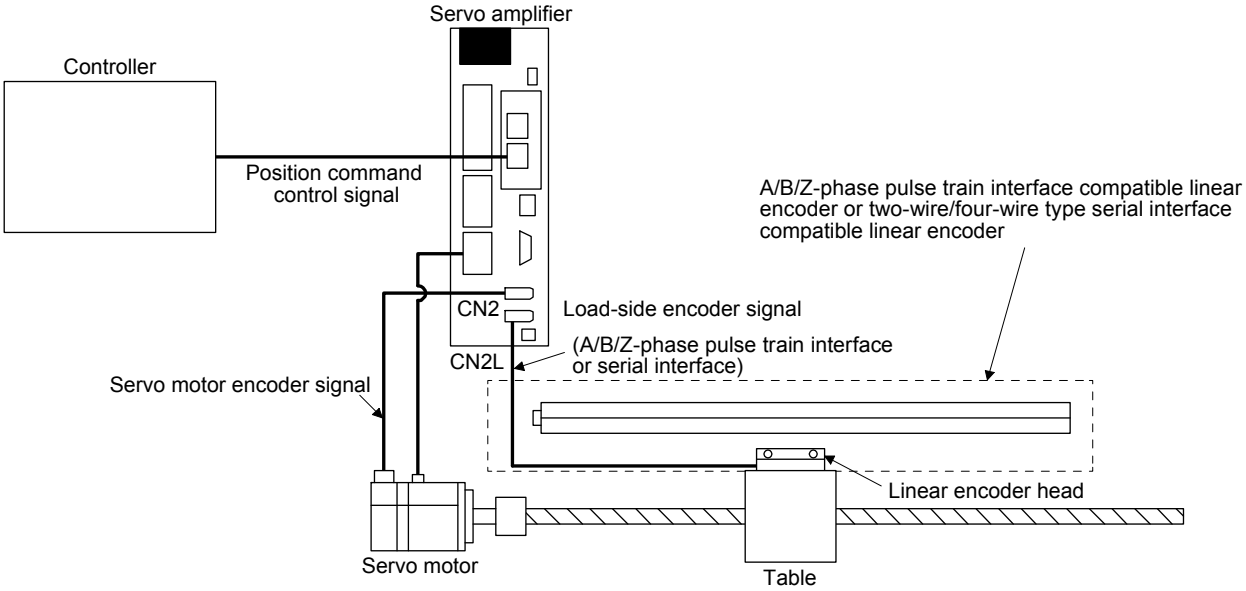

(b) When using rotary encoders

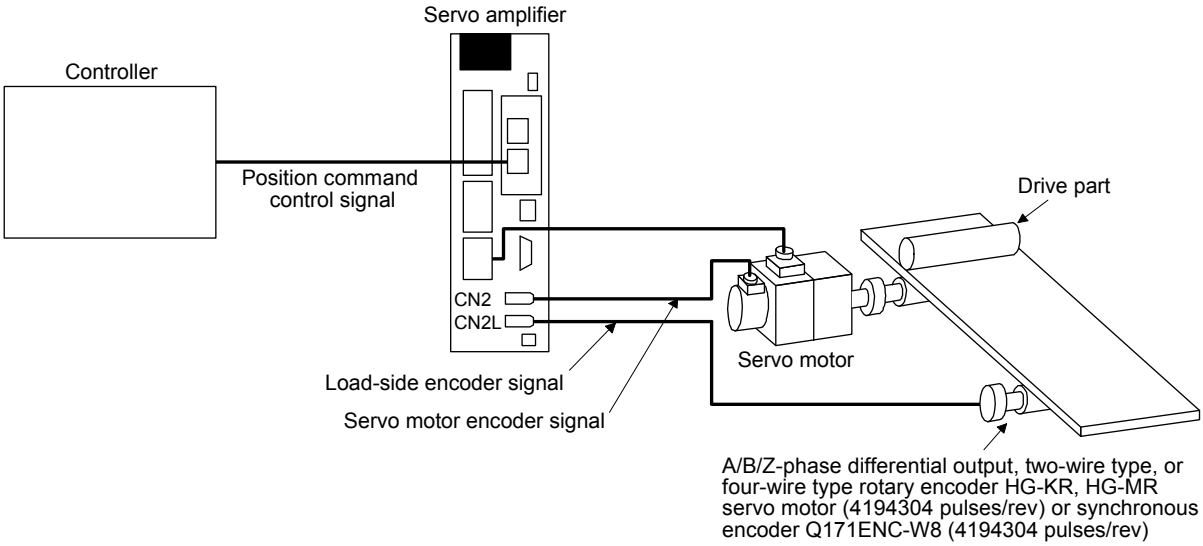

17.1.2 Scale measurement encoder

POINT
●Always use the scale measurement encoder cable introduced in this section. Using other products may cause a malfunction. ●For details of the scale measurement encoder specifications, performance, and assurance, contact each encoder manufacturer.

(1) Linear encoder

Refer to "Linear Encoder Instruction Manual" for usable linear encoders.

To use the scale measurement function in an absolute position detection system ([Pr. PA22] = "1 _ _ _"), an absolute type linear encoder is required. In this case, you do not need to install an encoder battery to the servo amplifier for backing up absolute position data on the load side. To use a servo motor in an absolute position detection system ([Pr. PA03] = "_ _ _ 1"), you need to install an encoder battery to the servo amplifier for backing up absolute position data on the servo motor side.

(2) Rotary encoder

When a rotary encoder is used as a scale measurement encoder, use either of the following servo motors or synchronous encoder as an encoder.

Servo motors and synchronous encoder that can be used as an encoder

	HG-KR	HG-MR	Synchronous encoder Q171ENC-W8
MR-J4-_TM_	○	○	○

To use the scale measurement function in an absolute position detection system ([Pr. PA22] = "1 _ _ _"), you need to install an encoder battery to the servo amplifier for backing up absolute position data on the load side. In this case, the battery life will be shorter because the power consumption is increased as the power is supplied to the two encoders of motor side and load side.

(3) Configuration diagram of encoder cable

The following figure shows the configuration diagram of a servo amplifier and scale measurement encoders. Cables to be used vary depending on each scale measurement encoder.

(a) Linear encoder

Refer to "Linear Encoder Instruction Manual" for encoder cables for linear encoders.

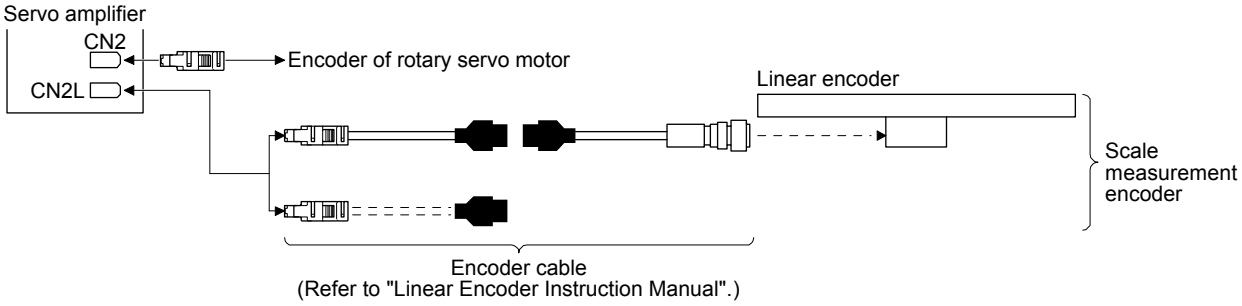

(b) Rotary encoder

Refer to "Servo Motor Instruction Manual (Vol. 3)" for encoder cables for rotary encoders.

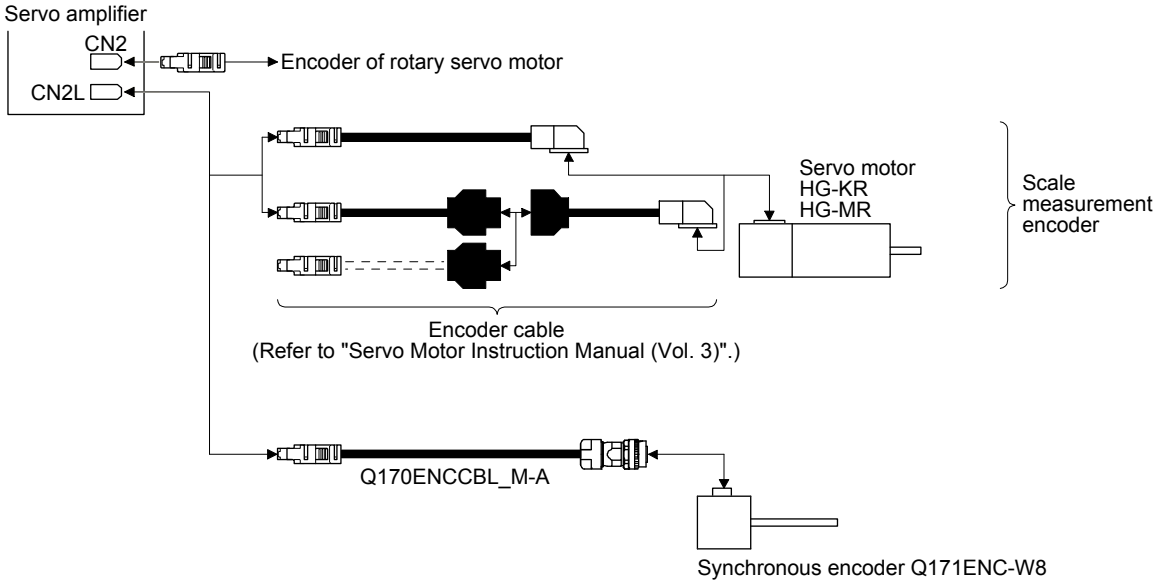

17.1.3 How to use the scale measurement function

(1) Scale measurement function selection
The scale measurement function is set with a combination of basic setting parameters [Pr. PA01] and [Pr. PA22].

(a) Operation mode selection
The scale measurement function can be used only when the semi closed loop system (standard control mode) is selected. Set [Pr. PA01] to "_ _ 0 _".

[Pr. PA01]

1	0		0

Operation mode selection

Setting value	Operation mode	Control unit
0	Semi closed loop system (Standard control mode)	Servo motor-side resolution unit

(b) Scale measurement function selection
Select a setting of the scale measurement function. Select "1 _ _ _" (Used in absolute position detection system) or "2 _ _ _" (Used in incremental system) for [Pr. PA22] according to the encoder in use.

[Pr. PA22]

	0	0	0

Scale measurement function selection
0: Disabled
1: Used in absolute position detection system
2: Used in incremental system

(2) Selection of scale measurement encoder communication methods and polarities
The communication method varies depending on the scale measurement encoder type used. For the communication method for using a linear encoder as a scale measurement encoder, refer to "Linear Encoder Instruction Manual". Select "Four-wire type" because there is only the four-wire type for a synchronous encoder.
Select the cable to be connected to CN2L connector in [Pr. PC26].

[Pr. PC26]

	0	0	0

Load-side encoder cable communication method selection
0: Two-wire type
1: Four-wire type
When using an encoder of A/B/Z-phase differential output method, set "0".
Incorrect setting will trigger [AL. 70] and [AL. 71].

Select a polarity of the scale measurement encoder with the following "Encoder pulse count polarity selection" and "Selection of A/B/Z-phase input interface encoder Z-phase connection judgment function" of [Pr. PC27] as necessary.

POINT

●"Encoder pulse count polarity selection" of [Pr. PC27] is not related to [Pr. PA14 Rotation direction selection]. Make sure to set the parameter according to the relationships between the servo motor and linear encoder/rotary encoder.

(a) How to set the parameter

1) Selecting an encoder pulse count polarity

This parameter is used to set the polarity of the load-side encoder to be connected to the CN2L connector in order to match the CCW direction of the servo motor and the increasing direction of the load-side encoder feedback. Set this as necessary.

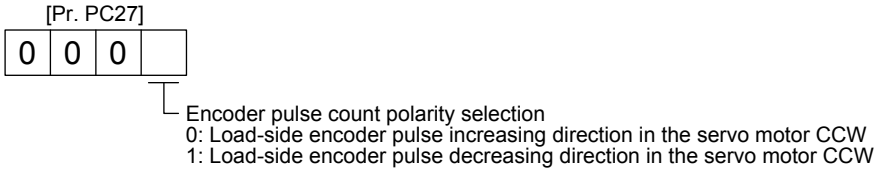

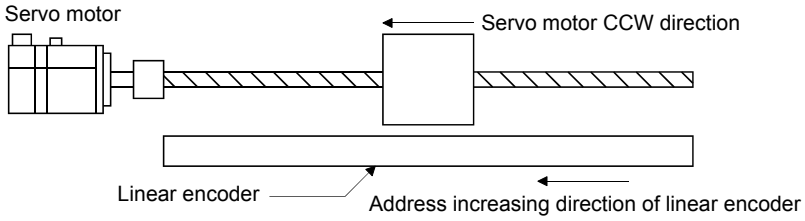

2) A/B/Z-phase input interface encoder Z-phase connection judgment function

This function can trigger an alarm by detecting non-signal for Z phase.

The Z-phase connection judgment function is enabled by default. To disable the Z-phase connection judgment function, set [Pr. PC27].

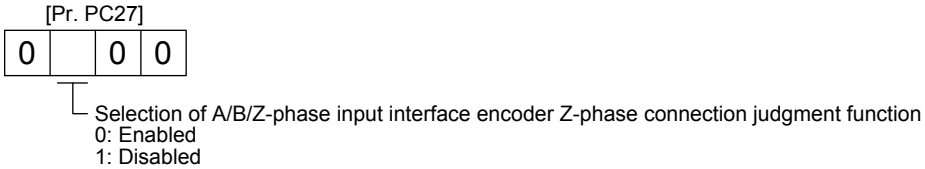

(b) How to check the scale measurement encoder feedback direction

You can check that the directions of the cumulative feedback pulses of the servo motor encoder and the load-side cumulative feedback pulses match by manually moving the device (scale measurement encoder) in the servo-off status. If mismatched, reverse the polarity.

(3) Checking scale measurement encoder position data

Check the scale measurement encoder mounting and parameter settings for any problems.

Operate the device (scale measurement encoder) to check that the data of the scale measurement encoder is renewed correctly. If the data is not renewed correctly, check the scale measurement encoder mounting, wiring, and parameter settings. Change the scale polarity as necessary.

17.2 Using a MR-J4-_TM_ servo amplifier in combination with the MR-D30 functional safety unit

POINT

●For items other than the ones described in this section, refer to the "MR-D30 Instruction Manual".

17.2.1 Summary

You can extend the safety observation function by using a MR-J4-_TM_ servo amplifier in combination with the MR-D30 functional safety unit.
However, which extension you can use depends on the software versions of the MR-J4-_TM_ servo amplifier and the MR-D30 unit. The safety observation function can be used only under the following combination. The "ERROR" LED on the MR-D30 display will turn on under other combinations.

MR-D30 software version	Servo amplifier software version	Safety observation function (IEC/EN 61800-5-2)	Servo motor with functional safety	Servo amplifier
A0	B0 or later	STO/SS1/SBC/SLS/SSM/SM	Not used	MR-J4-_TM_
A1 or later	B0	STO/SS1/SBC/SLS/SSM/SM	Not used	MR-J4-_TM_
	B1 or later	STO/SS1/SBC/SLS/SSM/SOS/SS2/SM	Not used HG-KR_W0C HG-SR_W0C HG-JR_W0C	MR-J4-_TM_

17.2.2 Function block diagram

The following block diagram shows an operation of the safety observation function using input devices assigned to pins of the CN10A and CN10B connectors. By diagnosis of input signals, the servo amplifier complies with the safety level Category 4, PL e, and SIL 3.

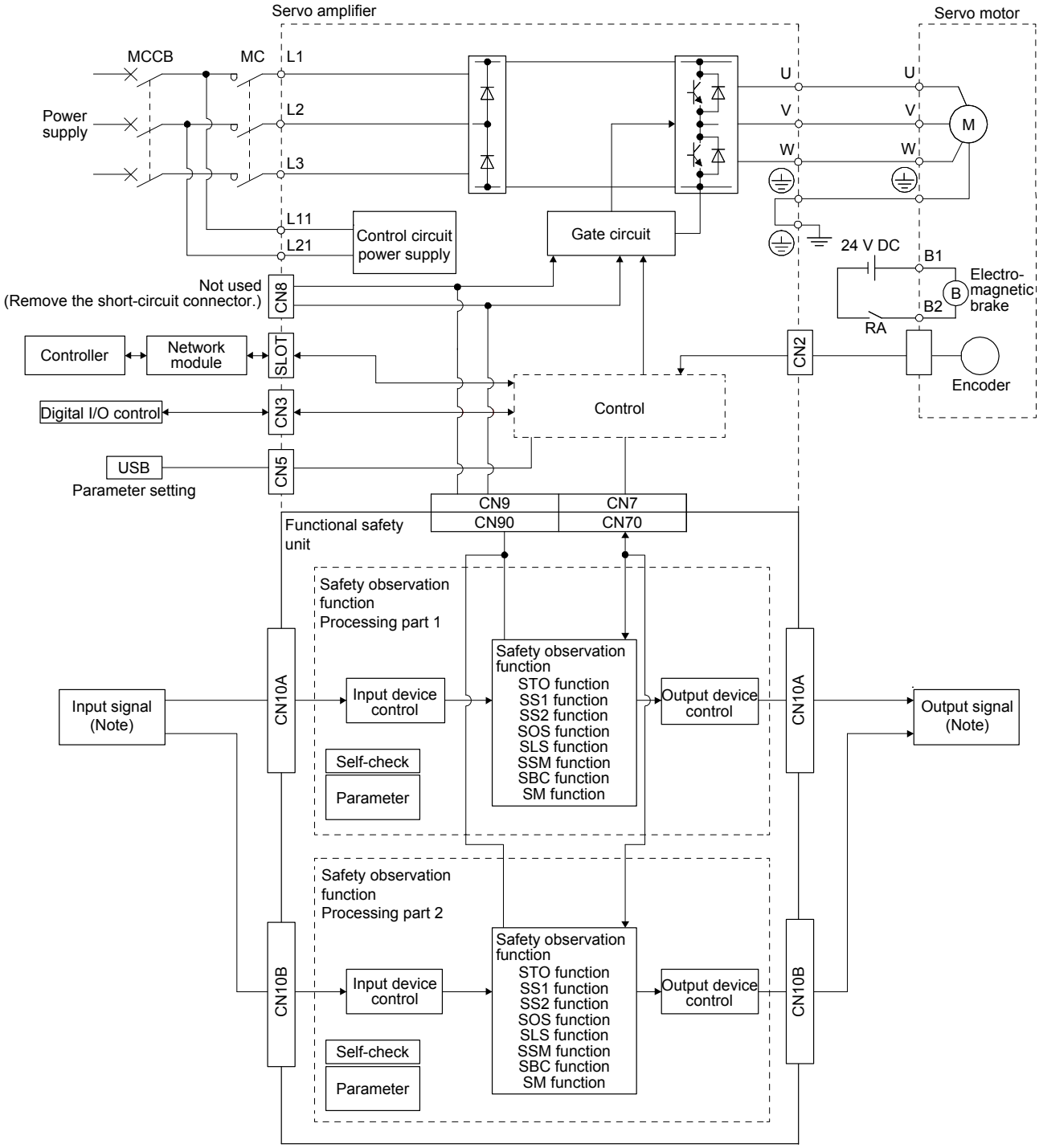

Note. Safety switch, safety relay, etc.

17.2.3 System configuration

POINT
●Remove the short-circuit connector connected to CN8.

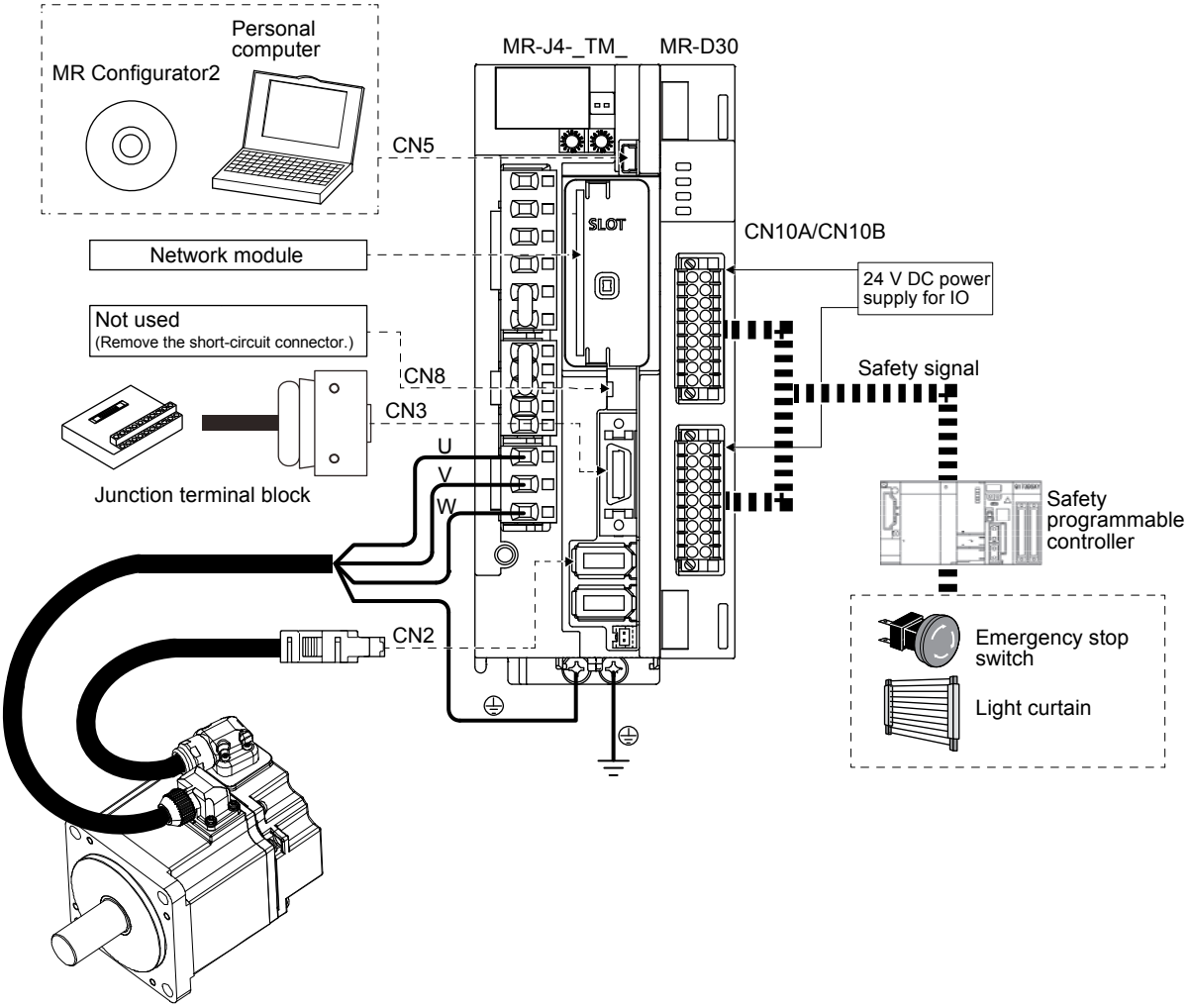

17.2.4 Combinations of servo amplifiers and servo motors

POINT

●When you use a servo motor with functional safety, no MR-BT6VCASE battery case is available.

The following table lists the servo amplifiers and servo motors that can be used with the MR-D30 unit. The usable safety observation function and achievable safety performance level vary depending on each servo motor to be used. Refer to section 4.1 of "MR-D30 Instruction Manual" for details.

(1) 200 V class

Servo amplifier	Rotary servo motor		Linear servo motor (primary side)	Direct drive motor
	Servo motor	Servo motor with functional safety		
MR-J4-10TM	HG-KR053 HG-KR13 HG-MR053 HG-MR13	HG-KR053W0C HG-KR13W0C		
MR-J4-20TM	HG-KR23 HG-MR23	HG-KR23W0C	LM-U2PAB-05M-0SS0 LM-U2PBB-07M-1SS0	TM-RFM002C20 TM-RG2M004E30 (Note 1) TM-RU2M004E30 (Note 1)
MR-J4-40TM	HG-KR43 HG-MR43	HG-KR43W0C	LM-H3P2A-07P-BSS0 LM-H3P3A-12P-CSS0 LM-K2P1A-01M-2SS1 LM-U2PAD-10M-0SS0 LM-U2PAF-15M-0SS0	TM-RFM004C20 TM-RG2M004E30 (Note 1, 3) TM-RU2M004E30 (Note 1, 3) TM-RG2M009G30 (Note 1) TM-RU2M009G30 (Note 1)
MR-J4-60TM	HG-SR51 HG-SR52 HG-JR53	HG-SR51W0C HG-SR52W0C HG-JR53W0C	LM-U2PBD-15M-1SS0	TM-RFM006C20 TM-RFM006E20
MR-J4-70TM	HG-KR73 HG-MR73 HG-JR73 HG-UR72	HG-KR73W0C HG-JR73W0C	LM-H3P3B-24P-CSS0 LM-H3P3C-36P-CSS0 LM-H3P7A-24P-ASS0 LM-K2P2A-02M-1SS1 LM-U2PBF-22M-1SS0	TM-RFM012E20 TM-RFM012G20 TM-RFM040J10
MR-J4-100TM	HG-SR81 HG-SR102 HG-JR53 (Note 2) HG-JR103	HG-SR81W0C HG-SR102W0C HG-JR53W0C (Note 2) HG-JR103W0C		TM-RFM018E20
MR-J4-200TM	HG-SR121 HG-SR201 HG-SR152 HG-SR202 HG-JR73 (Note 2) HG-JR103 (Note 2) HG-JR153 HG-JR203 HG-RR103 HG-RR153 HG-UR152	HG-SR121W0C HG-SR201W0C HG-SR152W0C HG-SR202W0C HG-JR73W0C (Note 2) HG-JR103W0C (Note 2) HG-JR153W0C HG-JR203W0C	LM-H3P3D-48P-CSS0 LM-H3P7B-48P-ASS0 LM-H3P7C-72P-ASS0 LM-FP2B-06M-1SS0 LM-K2P1C-03M-2SS1 LM-U2P2B-40M-2SS0	

Servo amplifier	Rotary servo motor		Linear servo motor (primary side)	Direct drive motor
	Servo motor	Servo motor with functional safety		
MR-J4-350TM	HG-SR301 HG-SR352 HG-JR153 (Note 2) HG-JR203 (Note 2) HG-JR353 HG-RR203 HG-UR202	HG-SR301W0C HG-SR352W0C HG-JR153W0C (Note 2) HG-JR203W0C (Note 2) HG-JR353W0C	LM-H3P7D-96P-ASS0 LM-K2P2C-07M-1SS1 LM-K2P3C-14M-1SS1 LM-U2P2C-60M-2SS0	TM-RFM048G20 TM-RFM072G20 TM-RFM120J10
MR-J4-500TM	HG-SR421 HG-SR502 HG-JR353 (Note 2) HG-JR503 HG-RR353 HG-RR503 HG-UR352 HG-UR502	HG-SR421W0C HG-SR502W0C HG-JR353W0C (Note 2) HG-JR503W0C	LM-FP2D-12M-1SS0 LM-FP4B-12M-1SS0 LM-K2P2E-12M-1SS1 LM-K2P3E-24M-1SS1 LM-U2P2D-80M-2SS0	TM-RFM240J10
MR-J4-700TM	HG-SR702 HG-JR703 HG-JR503 (Note 2) HG-JR601 HG-JR701M	HG-SR702W0C HG-JR703W0C HG-JR503W0C (Note 2) HG-JR601W0C HG-JR701MW0C	LM-FP2F-18M-1SS0 LM-FP4D-24M-1SS0	
MR-J4-11KTM	HG-JR903 HG-JR801 HG-JR12K1 HG-JR11K1M	HG-JR903W0C HG-JR801W0C HG-JR12K1W0C HG-JR11K1MW0C	LM-FP4F-36M-1SS0	
MR-J4-15KTM	HG-JR15K1 HG-JR15K1M	HG-JR15K1W0C HG-JR15K1MW0C	LM-FP4F-48M-1SS0	
MR-J4-22KTM	HG-JR20K1 HG-JR25K1 HG-JR22K1M	HG-JR20K1W0C HG-JR25K1W0C HG-JR22K1MW0C		

Note 1. This is available with servo amplifiers with software version B2 or later.
2. This combination increases the maximum torque of the servo motor to 400%.
3. The combination increases the rated torque and the maximum torque.

(2) 400 V class

Servo amplifier	Rotary servo motor		Linear servo motor (primary side)
	Servo motor	Servo motor with functional safety	
MR-J4-60TM4	HG-SR524 HG-JR534	HG-SR524W0C HG-JR534W0C	
MR-J4-100TM4	HG-SR1024 HG-JR534 (Note) HG-JR734 HG-JR1034	HG-SR1024W0C HG-JR534W0C (Note) HG-JR734W0C HG-JR1034W0C	
MR-J4-200TM4	HG-SR1524 HG-SR2024 HG-JR734 (Note) HG-JR1034 (Note) HG-JR1534 HG-JR2034	HG-SR1524W0C HG-SR2024W0C HG-JR734W0C (Note) HG-JR1034W0C (Note) HG-JR1534W0C HG-JR2034W0C	
MR-J4-350TM4	HG-SR3524 HG-JR1534 (Note) HG-JR2034 (Note) HG-JR3534	HG-SR3524W0C HG-JR1534W0C (Note) HG-JR2034W0C (Note) HG-JR3534W0C	
MR-J4-500TM4	HG-SR5024 HG-JR3534 (Note) HG-JR5034	HG-SR5024W0C HG-JR3534W0C (Note) HG-JR5034W0C	
MR-J4-700TM4	HG-SR7024 HG-JR5034 (Note) HG-JR6014 HG-JR701M4 HG-JR7034	HG-SR7024W0C HG-JR5034W0C (Note) HG-JR6014W0C HG-JR7034W0C HG-JR701M4W0C	
MR-J4-11KTM4	HG-JR8014 HG-JR12K14 HG-JR11K1M4 HG-JR9034	HG-JR8014W0C HG-JR12K14W0C HG-JR11K1M4W0C HG-JR9034W0C	
MR-J4-15KTM4	HG-JR15K14 HG-JR15K1M4	HG-JR15K14W0C HG-JR15K1M4W0C	
MR-J4-22KTM4	HG-JR20K14 HG-JR25K14 HG-JR22K1M4	HG-JR20K14W0C HG-JR25K14W0C HG-JR22K1M4W0C	LM-FP5H-60M-1SS0

Note. This combination increases the maximum torque from 300% to 400% of the rated torque.

(3) 100 V class

Servo amplifier	Rotary servo motor		Linear servo motor (primary side)	Direct drive motor
	Servo motor	Servo motor with functional safety		
MR-J4-10TM1	HG-KR053 HG-KR13 HG-MR053 HG-MR13	HG-KR053W0C HG-KR13W0C		
MR-J4-20TM1	HG-KR23 HG-MR23	HG-KR23W0C	LM-U2PAB-05M-0SS0 LM-U2PBB-07M-1SS0	TM-RFM002C20 TM-RG2M004E30 (Note 1) TM-RU2M004E30 (Note 1)
MR-J4-40TM1	HG-KR43 HG-MR43	HG-KR43W0C	LM-H3P2A-07P-BSS0 LM-H3P3A-12P-CSS0 LM-K2P1A-01M-2SS1 LM-U2PAD-10M-0SS0 LM-U2PAF-15M-0SS0	TM-RFM004C20 TM-RG2M004E30 (Note 1, 2) TM-RU2M004E30 (Note 1, 2) TM-RG2M009G30 (Note 1) TM-RU2M009G30 (Note 1)

Note 1. This is available with servo amplifiers with software version B2 or later.
2. The combination increases the rated torque and the maximum torque.

17.2.5 Connection example with other devices

The following connection diagram shows an operation of the safety observation function using input devices assigned to pins of the CN10A and CN10B connectors with a safety controller. By diagnosis of input signals, the servo amplifier complies with the safety level Category 4, PL e, and SIL 3.

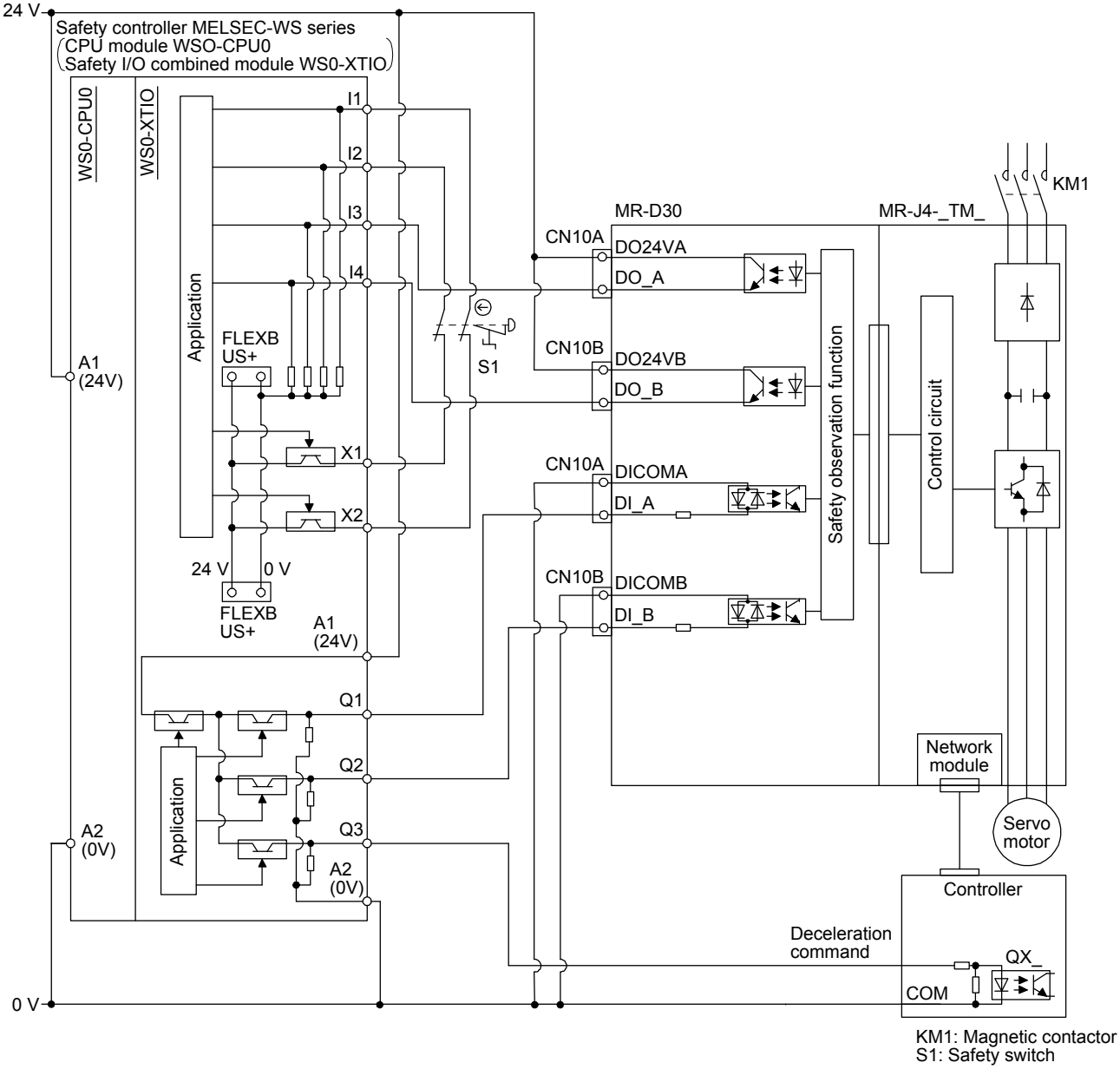

17.2.6 If an alarm occurs

When an error occurs during operation, the corresponding alarm or warning is displayed. For the servo amplifier status at occurrence or an alarm, refer to section 4.5.10 of "MR-D30 Instruction Manual".
When an alarm or warning has occurred, refer to section 17.2.7 and take the appropriate action. After a cause of the alarm has been removed, the alarm can be deactivated in any of the following methods.

- Error reset
- Communication reset
- Power OFF → ON

17.2.7 Troubleshooting

POINT

- Refer to section 8.4, and "MELSERVO-J4 Servo Amplifier Instruction Manual (Troubleshooting)" for details of alarms and warnings.
- This chapter shows alarms and warnings that can occur by using the servo amplifier in combination with the MR-D30 unit. For other alarms, refer to chapter 8.
- As soon as an alarm occurs, make the servo-off status and shut off the main circuit power.
- [AL. 37 Parameter error] and warnings are not recorded in the alarm history.

The following table lists the alarms and warnings to be added by using the functional safety unit.
When an alarm or warning has occurred, refer to the "MELSERVO-J4 Servo Amplifier Instruction Manual (Troubleshooting)" and take appropriate actions. When an alarm occurs, ALM (Malfunction) will turn off.
After the alarm cause has been removed, the alarm can be deactivated in any of the methods marked with ○ in the alarm reset column of the following table. For the procedures of resetting alarms, refer to section 17.2.6. Warnings are automatically canceled after the cause of occurrence is removed.

(1) Alarms

	No.	Name	Detail No.	Detail name	Stop method (Note 1, 2)	Alarm by which SSM is disabled (Note 4)	Alarm reset		
							Error reset	Communication reset	Power OFF → ON
Alarm	63	STO timing error	63.5	STO by functional safety unit	STO/DB		○	○	○
	64	Functional safety unit setting error	64.1	STO input error	DB				○
			64.2	Compatibility mode setting error	DB				○
			64.3	Operation mode setting error	DB				○
	65	Functional safety unit connection error	65.1	Functional safety unit communication error 1	SD	○			○
			65.2	Functional safety unit communication error 2	SD	○			○
			65.3	Functional safety unit communication error 3	SD	○			○
			65.4	Functional safety unit communication error 4	SD	○			○
			65.5	Functional safety unit communication error 5	SD	○			○
			65.6	Functional safety unit communication error 6	SD	○			○
			65.7	Functional safety unit communication error 7	SD	○			○
			65.8	Functional safety unit shut-off signal error 1	DB	○			○
			65.9	Functional safety unit shut-off signal error 2	DB	○			○

	No.	Name	Detail No.	Detail name	Stop method (Note 1, 2)	Alarm by which SSM is disabled (Note 4)	Alarm reset		
							Error reset	Communication reset	Power OFF → ON
Alarm	66	Encoder initial communication error (safety observation function)	66.1	Encoder initial communication - Receive data error 1 (safety observation function)	DB	○			○
			66.2	Encoder initial communication - Receive data error 2 (safety observation function)	DB	○			○
			66.3	Encoder initial communication - Receive data error 3 (safety observation function)	DB	○			○
			66.7	Encoder initial communication - Transmission data error 1 (safety observation function)	DB	○			○
			66.9	Encoder initial communication - Process error (safety observation function)	DB	○			○
	67	Encoder normal communication error 1 (safety observation function)	67.1	Encoder normal communication - Receive data error 1 (safety observation function)	DB	○			○
			67.2	Encoder normal communication - Receive data error 2 (safety observation function)	DB	○			○
			67.3	Encoder normal communication - Receive data error 3 (safety observation function)	DB	○			○
			67.4	Encoder normal communication - Receive data error 4 (safety observation function)	DB	○			○
			67.7	Encoder normal communication - Transmission data error 1 (safety observation function)	DB	○			○
	79	Functional safety unit diagnosis error	79.1	Functional safety unit power voltage error	STO/DB	○	○ (Note 3)		○
			79.2	Functional safety unit internal error	STO/DB	○			○
			79.3	Abnormal temperature of functional safety unit	SS1/SD	○	○ (Note 3)		○
			79.4	Servo amplifier error	SS1/SD	○			○
			79.5	Input device error	SS1/SD	○			○
			79.6	Output device error	SS1/SD	○			○
			79.7	Mismatched input signal error	SS1/SD	○			○
			79.8	Position feedback fixing error	STO/DB	○			○
	7A	Parameter setting range error (safety observation function)	7A.1	Parameter verification error (safety observation function)	STO/DB	○			○
			7A.2	Parameter setting range error (safety observation function)	STO/DB	○			○
			7A.3	Parameter combination error (safety observation function)	STO/DB	○			○
			7A.4	Functional safety unit combination error (safety observation function)	STO/DB	○			○
	7B	Encoder diagnosis error (safety observation function)	7B.1	Encoder diagnosis error 1 (safety observation function)	SS1/EDB	○			○
			7B.2	Encoder diagnosis error 2 (safety observation function)	SS1/EDB	○			○
			7B.3	Encoder diagnosis error 3 (safety observation function)	SS1/EDB	○			○
			7B.4	Encoder diagnosis error 4 (safety observation function)	SS1/EDB	○			○
	7C	Functional safety unit communication diagnosis error (safety observation function)	7C.1	Functional safety unit communication setting error (safety observation function)	SS1/SD	○	○ (Note 3)	○	○
			7C.2	Functional safety unit communication data error (safety observation function)	SS1/SD	○	○ (Note 3)		○
	7D	Safety observation error	7D.1	Stop observation error	STO/DB	○			○
			7D.2	Speed observation error	STO/DB		○ (Note 3)		○

Note 1. The following shows stop methods. For other stop methods, refer to section 4.5.2 (3) (a).
DB: Dynamic brake stop (For a servo amplifier without the dynamic brake, the servo motor coasts.)
SD: Forced stop deceleration
STO/DB: Dynamic brake stop operating the STO function
SS1/SD: Forced stop deceleration operating the SS1 function
SS1/EDB: Electronic dynamic brake stop (available only with specified servo motors)
Refer to the following table for the specified servo motors. The method of stopping servo motors other than the specified ones is SS1/DB.

Series	Servo motor
HG-KR	HG-KR053/HG-KR13/HG-KR23/HG-KR43
HG-MR	HG-MR053/HG-MR13/HG-MR23/HG-MR43
HG-SR	HG-SR51/HG-SR52

2 This is applicable when [Pr. PA04] is set to the initial value. The stop method of SD can be changed to DB using [Pr. PA04].
3. Reset alarms while all the safety observation functions have stopped.
4. The SSM function will be disabled and each output device will turn off.

(2) Warnings

	No.	Name	Detail No.	Detail name	Stop method (Note 1, 2)	Alarm by which SSM is disabled (Note 3)
Warning	95	STO warning	95.3	STO warning 1 (safety observation function)	STO/DB	○
			95.4	STO warning 2 (safety observation function)	STO/DB	○
			95.5	STO warning 3 (safety observation function)	STO/DB	
	E6	Servo forced stop warning	E6.2	SS1 forced stop warning 1 (safety observation function)	SS1/SD	
			E6.3	SS1 forced stop warning 2 (safety observation function)	SS1/SD	○

Note 1. The following shows stop methods.
DB: Dynamic brake stop (For a servo amplifier without the dynamic brake, the servo motor coasts.)
SD: Forced stop deceleration
STO/DB: Dynamic brake stop operating the STO function
2. This is applicable when [Pr. PA04] is set to the initial value. The stop method of SD can be changed to DB using [Pr. PA04].
3. The SSM function will be disabled and each output device will turn off.

MEMO

18. HOW TO USE THE POINT TABLE

POINT

- The point table method is available with servo amplifiers with software version B2 or later.
- When you use a linear servo motor, replace the following words in the left to the words in the right.
  Load to motor inertia ratio → Load mass
  Torque → Thrust
- For the home position return, refer to respective communication method manuals of "MR-J4-_TM_ Servo Amplifier Instruction Manual".

See the following table for the No. of each object mentioned in this chapter.

Object	No.	
	EtherCAT	PROFINET
Modes of operation	Index: 6060h	PNU: 24672, Sub: 0
Controlword	Index: 6040h	PNU: 24640, Sub: 0
Statusword	Index: 6041h	PNU: 24641, Sub: 0
Profile velocity	Index: 6081h	PNU: 24705, Sub: 0
Profile acceleration	Index: 6083h	PNU: 24707, Sub: 0
Profile deceleration	Index: 6084h	PNU: 24708, Sub: 0
Target point table	Index: 2D60h	PNU: 11616, Sub: 0
Status DO 1	Index: 2D11h	PNU: 11537, Sub: 0
Status DO 5	Index: 2D15h	PNU: 11541, Sub: 0
Point actual value	Index: 2D69h	PNU: 11625, Sub: 0
M code actual value	Index: 2D6Ah	PNU: 11626, Sub: 0
Point table _ _ _	Index: 2801h to 28FFh	PNU: 10241 to 10495, Sub: 0

18.1 Specification list

Item			Description
Operational specifications			Positioning with specification of point table No. (255 points)
Position command input (Note 1)			Set in the point table. Setting range of feed length per point: -999999 to 999999 [×10^{STM} μm], -99.9999 to 99.9999 [×10^{STM} inch], -999999 to 999999 [pulse]
Speed command input			Set the acceleration/deceleration time constants in the point table. Set the S-pattern acceleration/deceleration time constants with [Pr. PT51].
System			Signed absolute position command method/relative position command method
Torque limit			Limits the servo motor torque.
Control mode	Point table mode (pt)	Each positioning operation	Point table No. input method Operates each positioning based on position command and speed command.
		Automatic continuous positioning operation	Varying-speed operation (2 to 255 speeds)/automatic continuous positioning operation (2 to 255 points)/ Automatic continuous operation to a point table selected at startup/automatic continuous operation to the point table No. 1
	Jog mode (jg)	JOG operation	Executes an inching operation via network.
	Homing mode (hm)	Dog type (Rear end detection, Z-phase reference)	For the descriptions of the home position return types, refer to respective communication method manuals of "MR-J4-_TM_ Servo Amplifier Instruction Manual".
		Count type (Front end detection, Z-phase reference)	
		Data set type	
		Stopper type (Stopper position reference)	
		Dog type (Rear end detection, rear end reference)	
		Count type (Front end detection, front end reference)	
		Dog cradle type	
		Dog type last Z-phase reference (Note 2)	
		Dog type front end reference	
		Dogless Z-phase reference (Note 2)	
		Home position ignorance (servo-on position as home position)	
		Homing on positive home switch and index pulse (method 3)	
		Homing on positive home switch and index pulse (method 4)	
		Homing on negative home switch and index pulse (method 5)	
		Homing on negative home switch and index pulse (method 6)	

Item			Description
Control mode	Homing mode (hm)	Homing on home switch and index pulse (method 7)	For the descriptions of the home position return types, refer to respective communication method manuals of "MR-J4-_TM_ Servo Amplifier Instruction Manual".
		Homing on home switch and index pulse (method 8)	
		Homing on home switch and index pulse (method 11)	
		Homing on home switch and index pulse (method 12)	
		Homing without index pulse (method 19)	
		Homing without index pulse (method 20)	
		Homing without index pulse (method 21)	
		Homing without index pulse (method 22)	
		Homing without index pulse (method 23)	
		Homing without index pulse (method 24)	
		Homing without index pulse (method 27)	
		Homing without index pulse (method 28)	
		Homing on index pulse (method 33)	
		Homing on index pulse (method 34)	
		Homing on current position (method 35)	
		Homing on current position (method 37)	
Automatic positioning to home position function			High-speed automatic positioning to a defined home position
Other functions			Absolute position detection/external limit switch/software stroke limit

Note 1. STM is the ratio to the setting value of the position data. STM can be changed with [Pr. PT03 Feeding function selection].
2. If a direct drive motor or incremental type linear encoder is used, the dog type last Z-phase reference home position return or dogless Z-phase reference home position return cannot be used.

18.2 Switching power on for the first time

POINT

- Set [Pr. PA01] to "_ _ _ 6" (Positioning mode (point table method)).
- When using EtherCAT, set the mapping objects of 3rd RxPDO map (1602h) and 2nd TxPDO map (1A01h) in the PDO mapping. For details, refer to 3.3 of "MR-J4-_TM_ Servo Amplifier Instruction Manual (EtherCAT)".
- When using PROFINET, set the communication format to Telegram 103. For details, refer to section 3 of "MR-J4-_TM_ Servo Amplifier Instruction Manual (PROFINET)".

18. HOW TO USE THE POINT TABLE

When switching power on for the first time, follow this section to make a startup.

Startup procedure

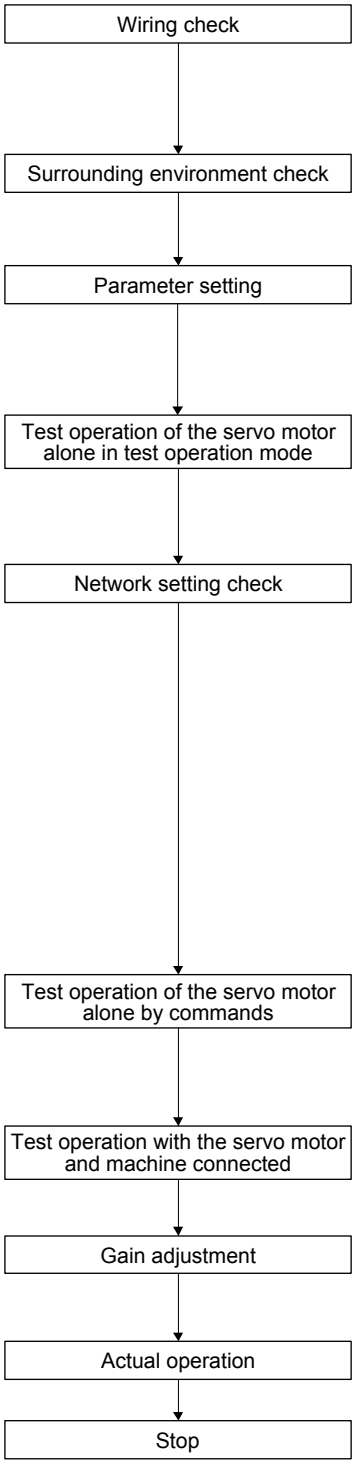

Check whether the servo amplifier and servo motor are wired correctly using visual inspection, DO forced output function (section 4.5.1), etc. (Refer to section 4.1.2.)

Check the surrounding environment of the servo amplifier and servo motor. (Refer to section 4.1.3.)

Set [Pr. PA01] to "_ _ _ 6" (Positioning mode (point table method)). Set the parameters as necessary for the regenerative option selection, etc. (Refer to chapter 5.)

With the servo motor disconnected from the machine, use the test operation mode and check whether the servo motor correctly rotates at the slowest speed possible. Refer to section 4.5 for the test operation mode.

Check the network setting to connect the controller.

1) When using EtherCAT, set the mapping objects of 3rd RxPDO map (1602h) and 2nd TxPDO map (1A01h) in PDO mapping.

2) When using PROFINET, set the communication format to Telegram 103.

For details, refer to respective communication method manuals of "MR-J4-_TM_ Servo Amplifier Instruction Manual".

For the test operation, with the servo motor disconnected from the machine and operated, give commands to the servo amplifier. Operate the servo motor at the speed as low as possible and check whether the servo motor rotates correctly.

Connect the servo motor with the machine, and check machine motions by transmitting operation commands from the controller.

Make gain adjustment to optimize the machine motions. (Refer to chapter 6.)

Stop giving commands and stop operation.

18.3 Point table mode (pt)

18.3.1 Point table mode (pt)

Set point tables in advance, and select any point table in "Target point table" to start operation with "Controlword bit 4 (New set-point)". The auxiliary function of the point table enables to select absolute position command method and relative position command method.

(1) Absolute position command method
As position data, set the target address to be reached.

Setting range: -999999 to 999999 [$\times 10^{STM}$ μm] (STM = Feed length multiplication [Pr. PT03])
-999999 to 999999 [$\times 10^{(STM-4)}$ inch] (STM = Feed length multiplication [Pr. PT03])
-999999 to 999999 [pulse]

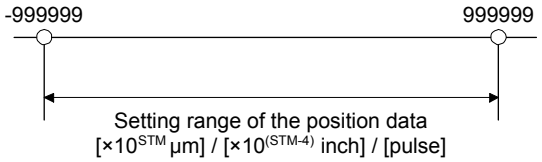

(2) Relative position command method
As position data, set the travel distance from the current address to the target address.

Setting range: -999999 to 999999 [$\times 10^{STM}$ μm] (STM = Feed length multiplication [Pr. PT03])
-999999 to 999999 [$\times 10^{(STM-4)}$ inch] (STM = Feed length multiplication [Pr. PT03])
-999999 to 999999 [pulse]

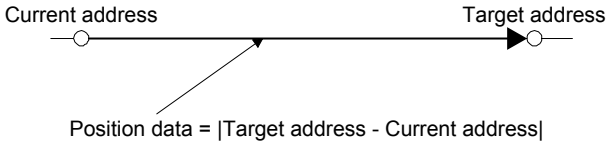

18.3.2 Automatic operation using point table

Select absolute position command method or relative position command method in the auxiliary function of the point table to use this function.

(1) Point table

POINT
●Refer to section 18.5 for the setting of the point table.

Set the point table values using MR Configurator2 or "Point table 001 to 255".
Set the position data, servo motor speed, acceleration time constant, deceleration time constant, dwell time, auxiliary function, and M code to the point table.
To use the point table with the absolute position command method, set "0", "1", "8", or "9" to the auxiliary function. To use the point table with the relative position command method, set "2", "3", "10", or "11" to the auxiliary function.
When you set a value outside the setting range to the point table, the set value will be clamped with the maximum or minimum value. If the value becomes out of the range because of the changes in the command unit or the connected servo motor, [AL. 37] will occur.

Item	Setting range	Unit	Description
Position data	-999999 to 999999 (Note 1)	$\times 10^{STM}$ μm $\times 10^{(STM-4)}$ inch pulse	(1) When using this point table with the absolute position command method Set the target address (absolute value). (2) When using this point table with the relative position command method Set the travel distance. A "-" sign indicates a reverse rotation command.
Servo motor speed	0 to permissible speed	0.01 r/min 0.01 mm/s (Note 2)	Set the command speed of the servo motor for execution of positioning. The setting value must be the instantaneous permissible speed or less of the servo motor used. If a value smaller than "1" is set for the servo motor speed, the servo motor may not rotate.
Acceleration time constant	0 to 20000	ms	Set a time for the servo motor to reach the rated speed.
Deceleration time constant	0 to 20000	ms	Set a time for the servo motor to stop from the rated speed.
Dwell time	0 to 20000	ms	Set the dwell time. To disable the dwell time, set "0" or "2" to the auxiliary function. To perform a continuous operation, set "1", "3", "8", "9", "10", or "11" to the auxiliary function and "0" to the dwell time. When the dwell time is set, a positioning of the next point table will be started after the positioning of the selected data is completed, and the set dwell time has elapsed.
Auxiliary function	0 to 3, 8 to 11		Set the auxiliary function. (1) When using this point table with the absolute position command method 0: Automatic operation for a selected point table is performed. 1: Automatic continuous operation is performed without a stop to the next point table. 8: Automatic continuous operation is performed without a stop to the point table selected at start-up. 9: Automatic continuous operation is performed without stopping a point table No. 1. (2) When using this point table with the relative position command method 2: Automatic operation for a selected point table is performed. 3: Automatic continuous operation is performed without a stop to the next point table. 10: Automatic continuous operation for a point table selected at start-up is performed. 11: Automatic continuous operation is performed without stopping a point table No. 1. When an opposite rotation direction is set, the servo motor rotates in the opposite direction after smoothing zero (command output) is confirmed. Setting "1" or "3" to point table No. 255 results in an error. Refer to (4) (b) in this section for details.
M code	0 to 99		Set a code to output at the completion of positioning. M code can be read with "M code actual value".

Note 1. When the unit of the position data is μm or inch, the location of the decimal point is changed according to the STM setting.
2. The unit will be mm/s in the linear servo motor control mode.

(2) Parameter setting

Set the following parameters to perform automatic operation.

(a) Rotation direction selection ([Pr. PA14])

Select the servo motor rotation direction when "Controlword bit 4 (New set-point)" is switched on.

[Pr. PA14] setting	Servo motor rotation direction "Controlword bit 4 (New set-point)" on
0	CCW rotation with + position data CW rotation with - position data
1	CW rotation with + position data CCW rotation with - position data

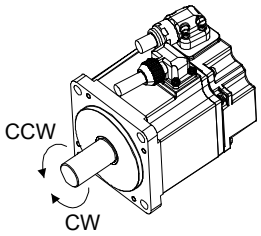

(b) Position data unit ([Pr. PT01])

Set the unit of the position data.

[Pr. PT01] setting	Position data unit
_ 0 _ _	mm
_ 1 _ _	inch
_ 3 _ _	pulse

(c) Feed length multiplication ([Pr. PT03])

Set the feed length multiplication factor (STM) of the position data.

[Pr. PT03] setting	Position data input range		
	[mm]	[inch]	[pulse] (Note)
_ _ _ 0	- 999.999 to + 999.999	- 99.9999 to + 99.9999	- 999999 to + 999999
_ _ _ 1	- 9999.99 to + 9999.99	- 999.999 to + 999.999	
_ _ _ 2	- 99999.9 to + 99999.9	- 9999.99 to + 9999.99	
_ _ _ 3	- 999999 to + 999999	- 99999.9 to + 99999.9	

Note. The feed length multiplication setting ([Pr. PT03]) is not applied to the unit multiplication factor.
Adjust the unit multiplication factor in the electronic gear setting ([Pr. PA06] and [Pr. PA07]).

(3) Operation

Selecting the point table with "Target point table" and switching on "Controlword bit 4 (New set-point)" starts positioning to the position data at the set speed, acceleration time constant and deceleration time constant.

Item	Object to be used	Setting
Point table mode (pt) selection	Modes of operation	Set "-101".
Point table selection	Target point table	Set the point table No. to use.
Start	Controlword	Switch on "Controlword bit 4 (New set-point)".

(4) Automatic operation timing chart

(a) Automatic individual positioning operation

While the servo motor is stopped under servo-on state, switching on "Controlword bit 4 (New set-point)" starts the automatic positioning operation.

The following shows a timing chart.

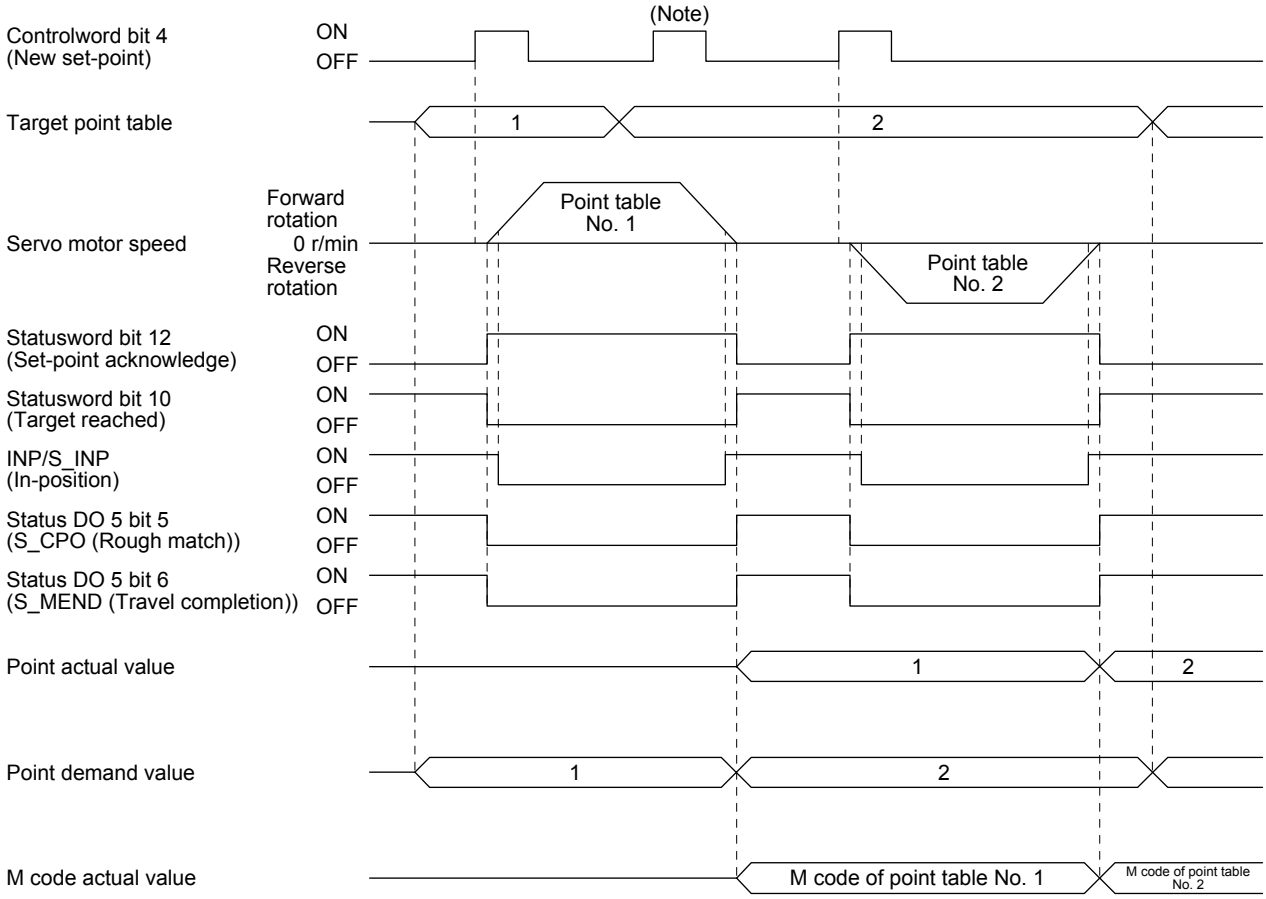

Note. Switching on "Controlword bit 4 (New set-point)" is invalid during the servo motor rotation.

(b) Automatic continuous positioning operation

By merely selecting a point table and switching on "Controlword bit 4 (New set-point)", the operation can be performed in accordance with the point tables having consecutive numbers.

The following shows a timing chart.

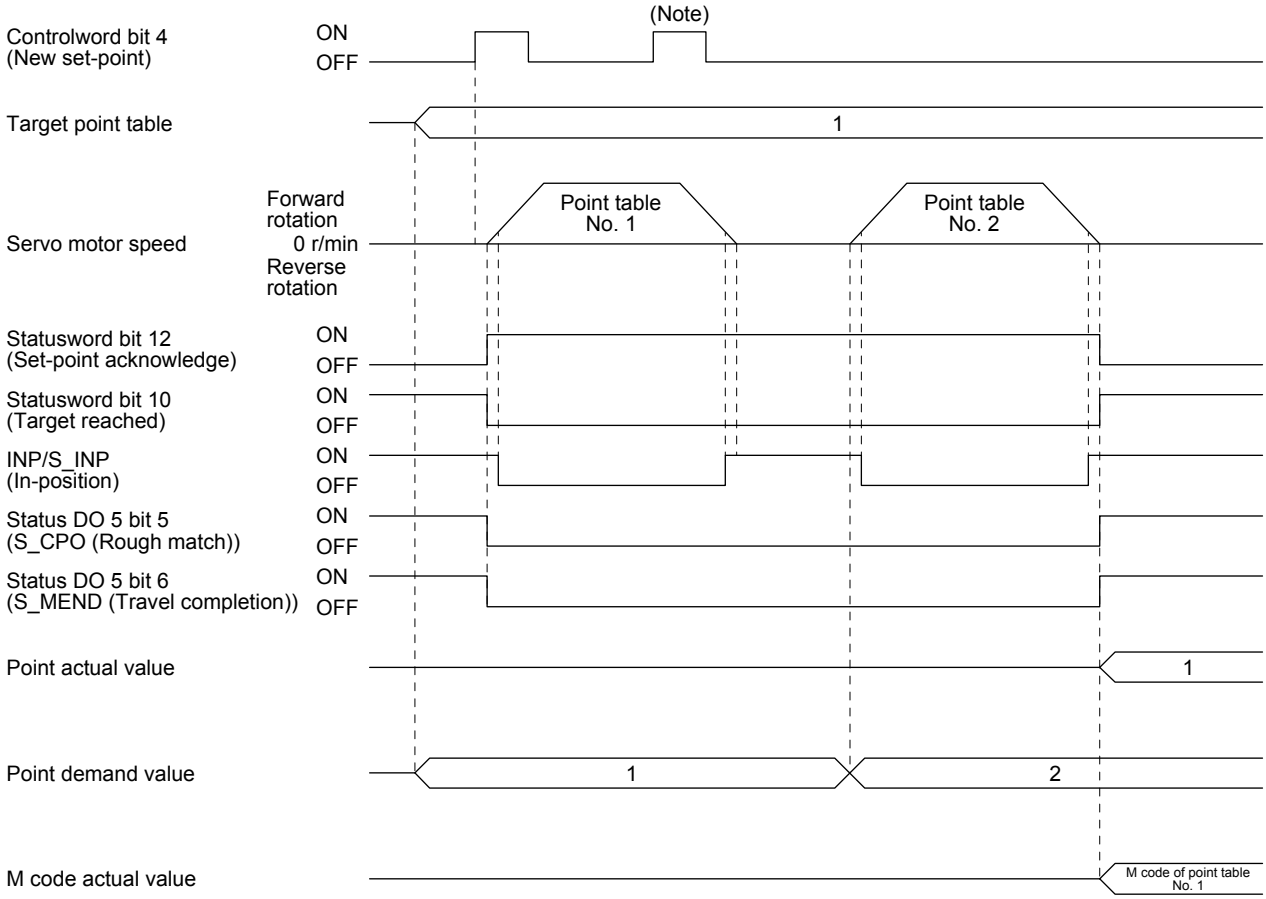

Note. Switching on "Controlword bit 4 (New set-point)" is invalid during the servo motor rotation.

By specifying the absolute position command or the relative position command in the auxiliary function of the point table, the automatic continuous operation can be performed.

The following shows how to set.

Point table setting		
Dwell time	Auxiliary function	
	When the position data is absolute value	When the position data is relative value
1 or more	1	3

1) Positioning in a single direction
The following shows an operation example with the set values listed in the table below.
In this example, point table No. 1 and No. 3 are set to the absolute position command method, and point table No. 2 is set to the relative position command method.

Point table No.	Position data [10^{STM} μm]	Servo motor speed [r/min]	Acceleration time constant [ms]	Deceleration time constant [ms]	Dwell time [ms]	Auxiliary function	M code
1	5.00	3000.00	100	150	100	1	05
2	5.00	2000.00	150	200	200	3	10
3	15.00	1000.00	300	100	Disabled	0 (Note)	15

Note. Be sure to set "0" or "2" to the auxiliary function of the last point table of the consecutive point tables.
0: When using the point table with the absolute position command method
2: When using the point table with the relative position command method

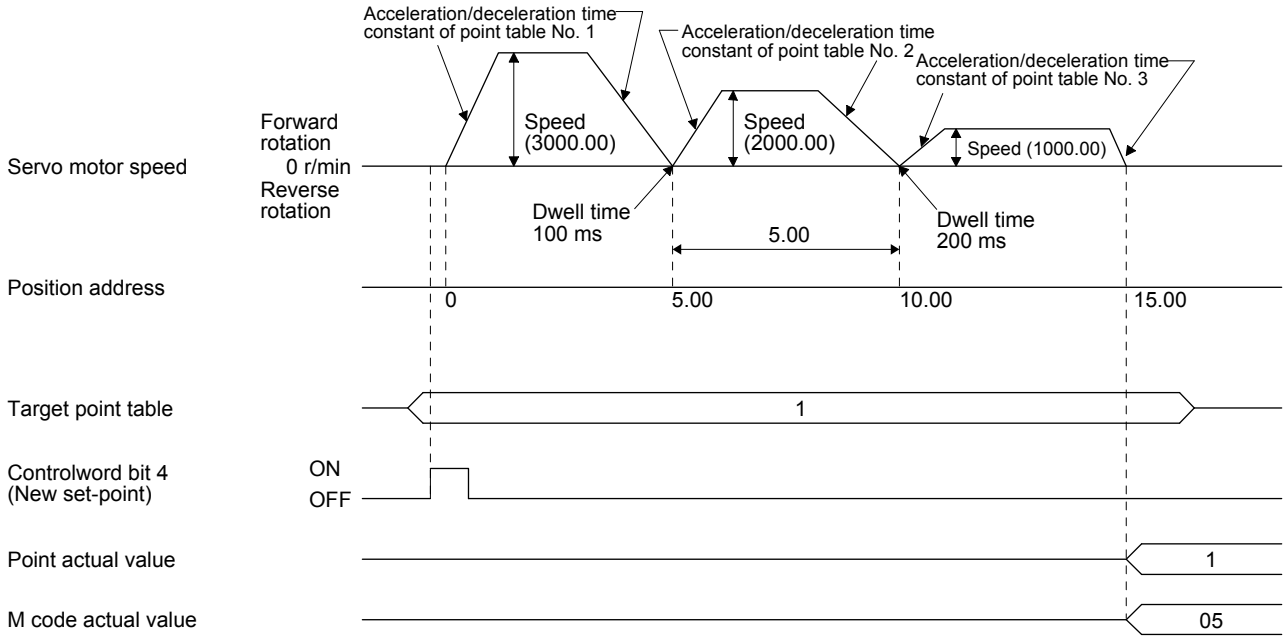

2) Positioning in the reverse direction midway
The following shows an operation example with the set values listed in the table below.
In this example, point table No. 1 and No. 3 are set to the absolute position command method, and point table No. 2 is set to the relative position command method.

Point table No.	Position data [10^{STM} μm]	Servo motor speed [r/min]	Acceleration time constant [ms]	Deceleration time constant [ms]	Dwell time [ms]	Auxiliary function	M code
1	5.00	3000.00	100	150	100	1	05
2	7.00	2000.00	150	200	200	3	10
3	8.00	1000.00	300	100	Disabled	0 (Note)	15

Note. Be sure to set "0" or "2" to the auxiliary function of the last point table of the consecutive point tables.
0: When using the point table with the absolute position command method
2: When using the point table with the relative position command method

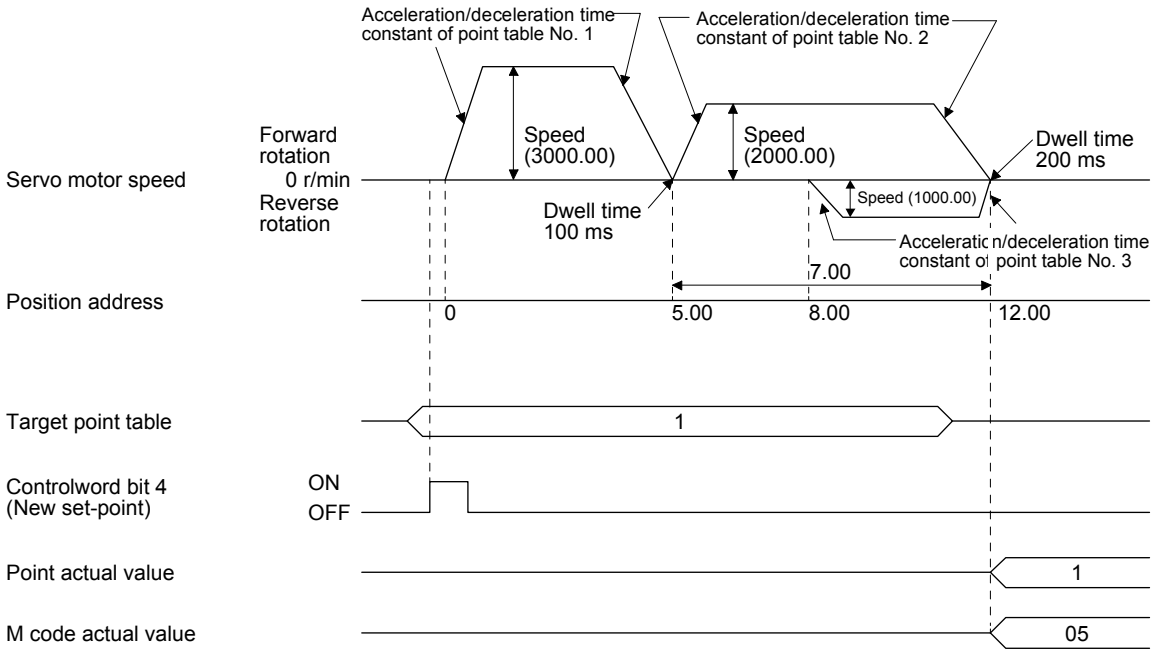

(c) Varying-speed operation

By setting the auxiliary function of the point table, the servo motor speed during positioning can be changed. Point tables are used by the number of the set speed.

Set "1" or "3" to the auxiliary function to execute the positioning at the speed set in the following point table.
At this time, the position data selected at start is enabled, and the acceleration/deceleration time constant set in the next and subsequent point tables is disabled.
By setting "1" or "3" to auxiliary functions until point table No. 254, the operation can be performed at maximum 255 speeds.
Be sure to set "0" or "2" to the auxiliary function of the last point table.
To perform varying-speed operation, be sure to set "0" to the dwell time.
Setting "1" or more enables the automatic continuous positioning operation.
The following table shows an example of setting.

Point table No.	Dwell time [ms] (Note 1)	Auxiliary function	Varying-speed operation
1	0	1	Consecutive point table data
2	0	3	
3	Disabled	0 (Note 2)	
4	0	3	Consecutive point table data
5	0	1	
6	Disabled	2 (Note 2)	

Note 1. Be sure to set "0".
2. Be sure to set "0" or "2" to the auxiliary function of the last point table of the consecutive point tables.

1) Positioning in a single direction
The following shows an operation example with the set values listed in the table below.
In this example, point table No. 1 and No. 3 are set to the absolute position command method, and point table No. 2 is set to the relative position command method.

Point table No.	Position data [10^{STM} μm]	Servo motor speed [r/min]	Acceleration time constant [ms]	Deceleration time constant [ms]	Dwell time [ms] (Note 1)	Auxiliary function	M code
1	5.00	3000.00	100	150	0	1	05
2	3.00	2000.00	Disabled	Disabled	0	3	10
3	10.00	1000.00	Disabled	Disabled	0	1	15
4	6.00	500.00	Disabled	Disabled	Disabled	2 (Note 2)	20

Note 1. Be sure to set "0".
2. Be sure to set "0" or "2" to the auxiliary function of the last point table of the consecutive point tables.
0: When using the point table with the absolute position command method
2: When using the point table with the relative position command method

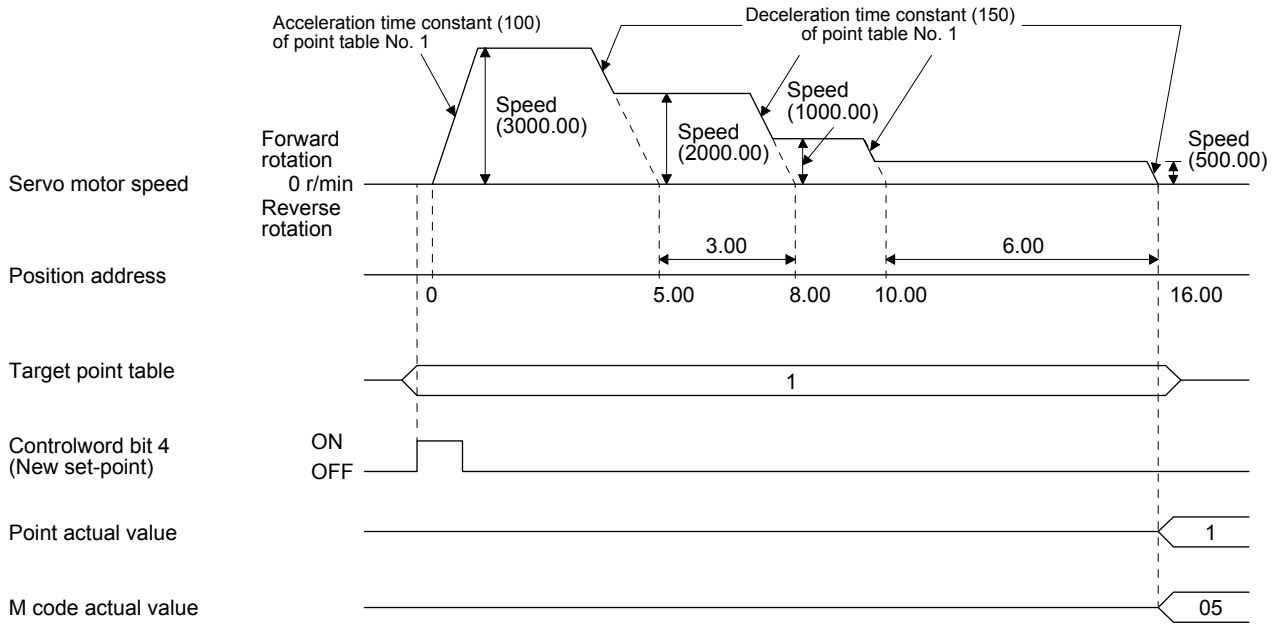

2) Positioning in the reverse direction midway

The following shows an operation example with the set values listed in the table below.

In this example, point table No. 1 and No. 3 are set to the absolute position command method, and point table No. 2 is set to the relative position command method.

Point table No.	Position data [10^{STM} μm]	Servo motor speed [r/min]	Acceleration time constant [ms]	Deceleration time constant [ms]	Dwell time [ms] (Note 1)	Auxiliary function	M code
1	5.00	3000.00	100	150	0	1	05
2	7.00	2000.00	Disabled	Disabled	0	3	10
3	8.00	1000.00	Disabled	Disabled	Disabled	0 (Note 2)	15

Note 1. Be sure to set "0".

2. Be sure to set "0" or "2" to the auxiliary function of the last point table of the consecutive point tables.

0: When using the point table with the absolute position command method

2: When using the point table with the relative position command method

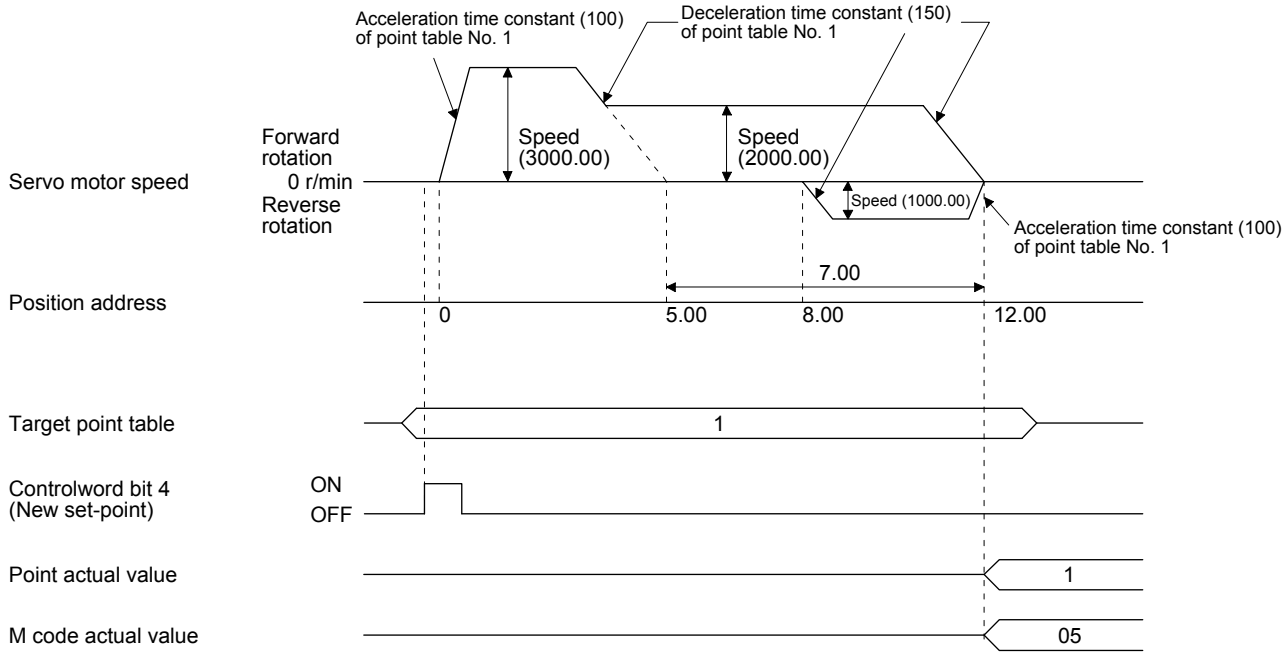

(d) Automatic repeat positioning operation

By setting the auxiliary function of the point table, the operation pattern of the set point table No. can be returned to, and the positioning operation can be performed repeatedly.

Setting "8" or "10" to the auxiliary function performs an automatic continuous operation or a varying-speed operation until that point table, and after the completion of positioning, performs the operation again from the operation pattern of the point table No. used at start-up.
Setting "9" or "11" to the auxiliary function performs an automatic continuous operation or a varying-speed operation until that point table, and after the completion of positioning, performs the operation again from the operation pattern of point table No. 1.

1) Automatic repeat positioning operation by absolute position command method

Example 1. Operations when "8" is set to the auxiliary function of point table No. 4

Point table No.	Position data [10^{STM} μm]	Servo motor speed [r/min]	Acceleration time constant [ms]	Deceleration time constant [ms]	Dwell time [ms]	Auxiliary function	M code
1	4.00	1500.00	200	100	150	1	01
2	5.00	3000.00	100	150	100	1	05
3	5.00	2000.00	150	200	200	3	10
4	15.00	1000.00	300	100	150	8	15

Operation sequence

1) Starting with point table No. 2
2) Executing point table No. 3
3) Executing point table No. 4
4) Executing again point table No. 2 used at start-up when "8" is set to the auxiliary function of point table No. 4
5) Repeating the above execution in the sequence of 2) to 3) to 4) to 2) to 3) to 4)

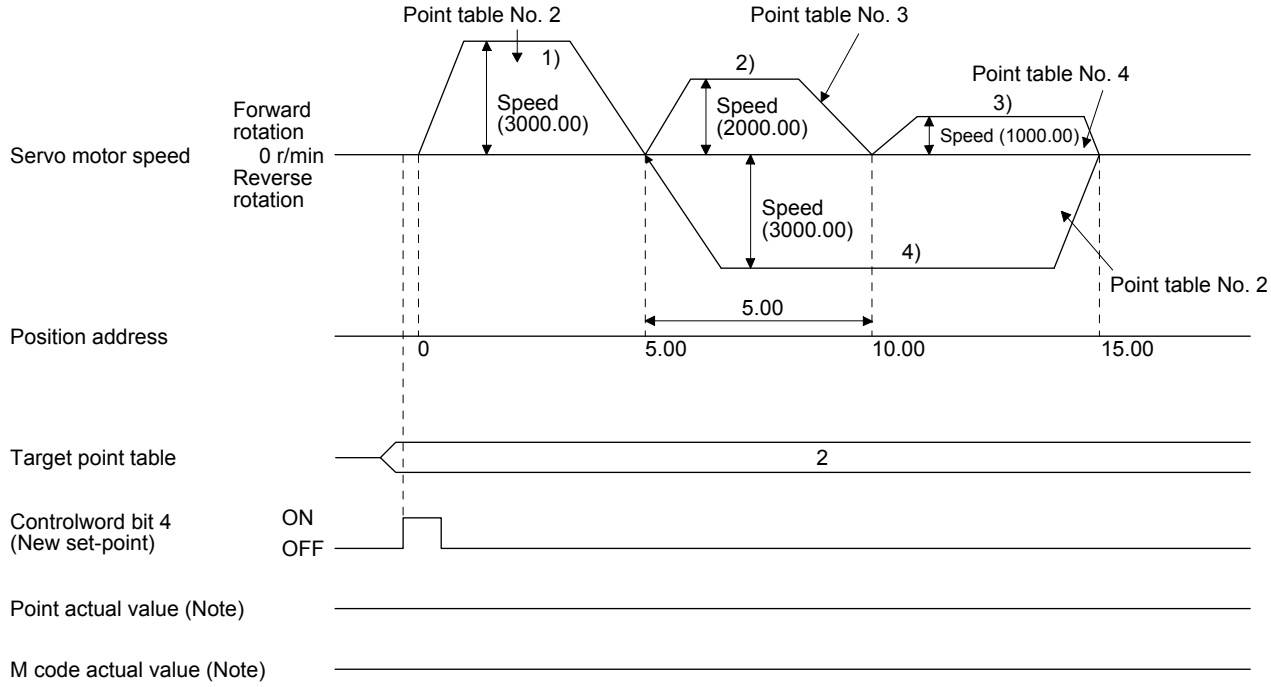

Note. "Point actual value" and "M code actual value" are not outputted in an automatic continuous operation.

Example2. Operations when "9" is set to the auxiliary function of point table No. 3

Point table No.	Position data [10^{STM} μm]	Servo motor speed [r/min]	Acceleration time constant [ms]	Deceleration time constant [ms]	Dwell time [ms]	Auxiliary function	M code
1	0.00	3000.00	100	150	100	1	05
2	5.00	2000.00	150	200	200	1	10
3	15.00	1000.00	300	100	150	9	15

Operation sequence

1) Starting with point table No. 2
2) Executing point table No. 3
3) Executing point table No. 1 when "9" is set to the auxiliary function of point table No. 3
4) Repeating the above execution in the sequence of 1) to 2) to 3) to 1) to 2) to 3)

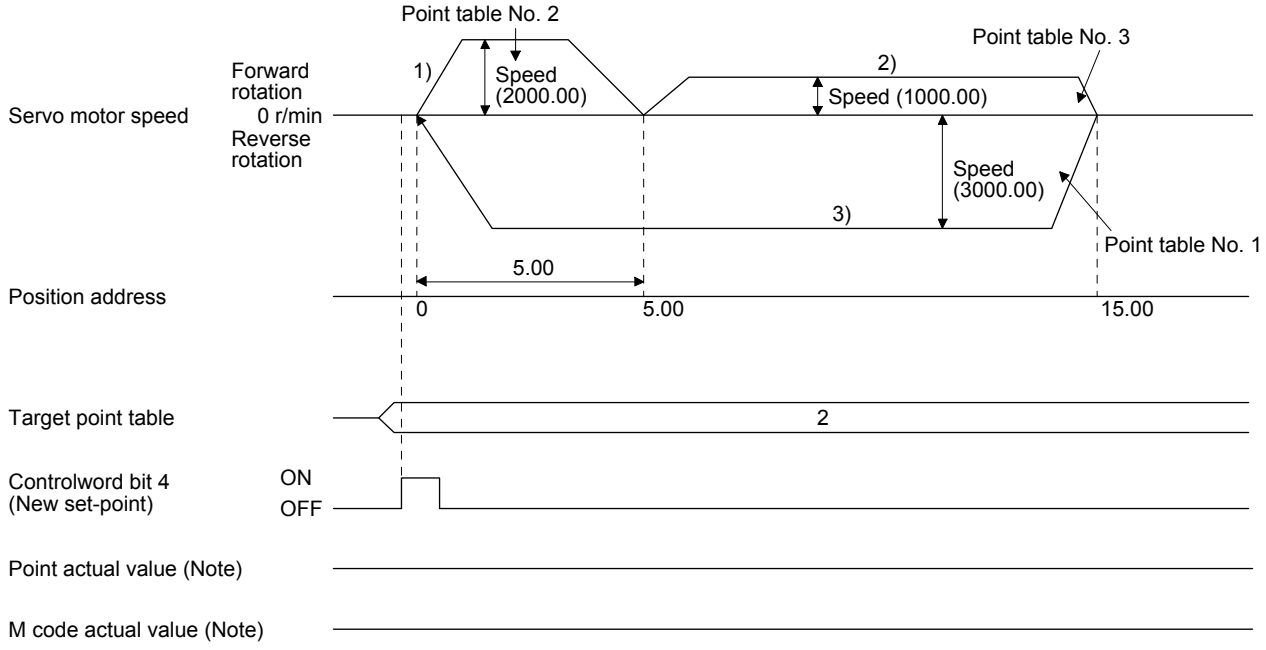

Note. "Point actual value" and "M code actual value" are not outputted in an automatic continuous operation.

2) Automatic repeat positioning operation by relative position command method
Example 1. Operations when "10" is set to the auxiliary function of point table No. 4

Point table No.	Position data [10^{STM} μm]	Servo motor speed [r/min]	Acceleration time constant [ms]	Deceleration time constant [ms]	Dwell time [ms]	Auxiliary function	M code
1	4.00	1500.00	200	100	150	1	01
2	5.00	3000.00	100	150	100	3	05
3	10.00	2000.00	150	200	200	1	10
4	5.00	1000.00	300	100	150	10	15

Operation sequence
1) Starting with point table No. 2
2) Executing point table No. 3
3) Executing point table No. 4
4) Executing again point table No. 2 used at start-up when "10" is set to the auxiliary function of point table No. 4
5) Repeating the above execution in the sequence of 1) to 2) to 3) to 4) to 2) to 3) to 4)

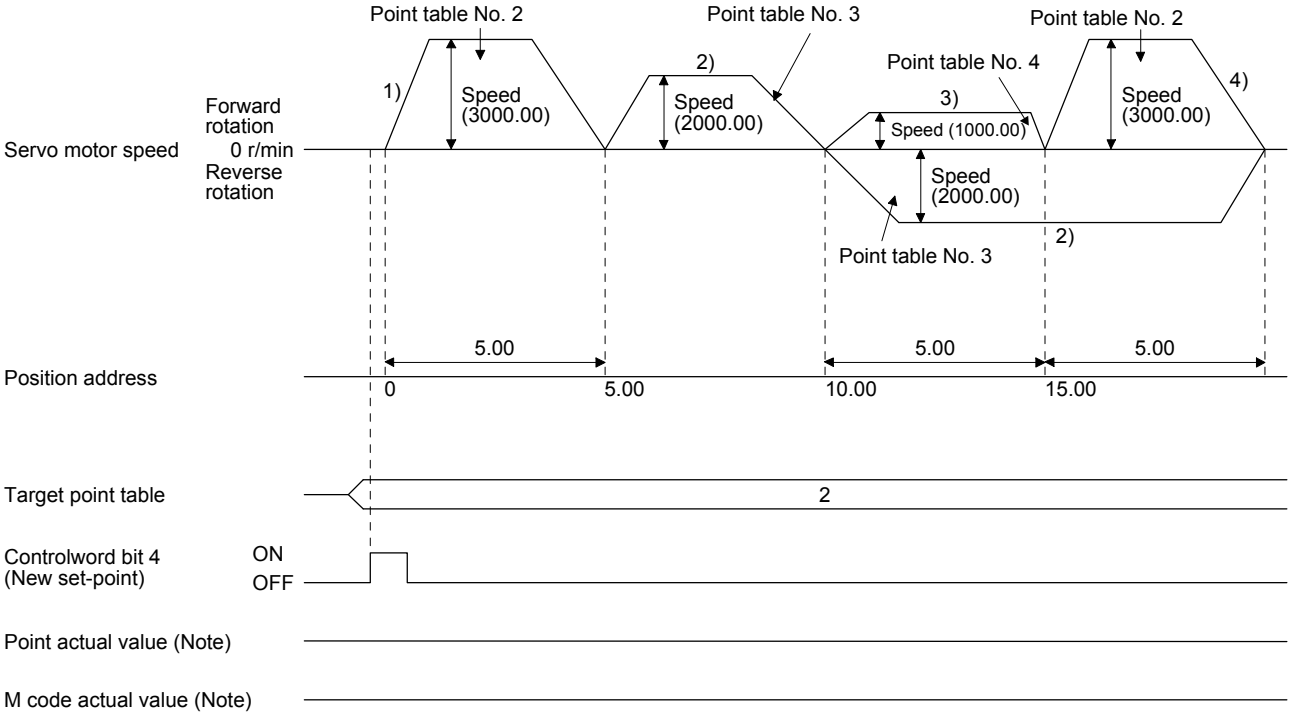

Note. "Point actual value" and "M code actual value" are not outputted in an automatic continuous operation.

Example 2. Operations when "11" is set to the auxiliary function of point table No. 3

Point table No.	Position data [10^{STM} μm]	Servo motor speed [r/min]	Acceleration time constant [ms]	Deceleration time constant [ms]	Dwell time [ms]	Auxiliary function	M code
1	5.00	3000.00	100	150	100	3	05
2	10.00	2000.00	150	200	200	1	10
3	5.00	1000.00	300	100	150	11	15

Operation sequence

1) Starting with point table No. 2
2) Executing point table No. 3
3) Executing point table No. 1 when "11" is set to the auxiliary function of point table No. 3
4) Repeating the above execution in the sequence of 1) to 2) to 3) to 1) to 2) to 3)

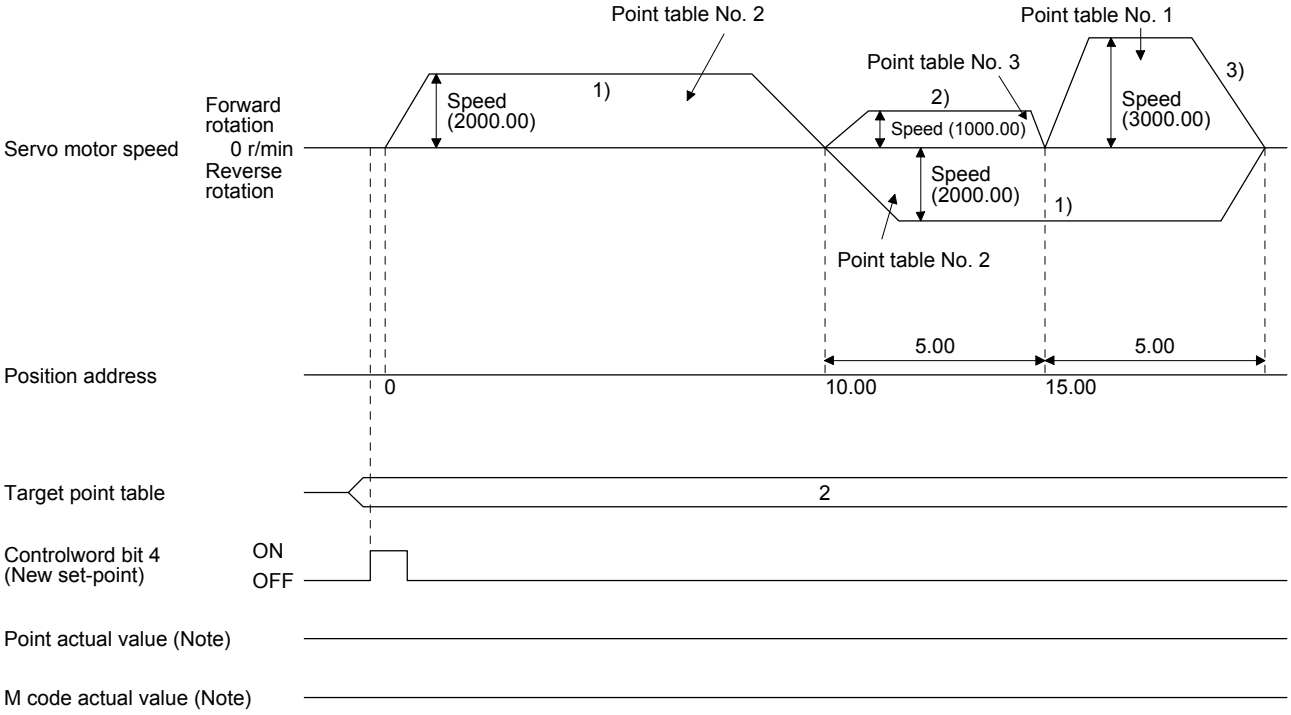

Note. "Point actual value" and "M code actual value" are not outputted in an automatic continuous operation.

3) Varying-speed operation by absolute position command method
Example. Operations when "8" is set to the auxiliary function of point table No. 3

Point table No.	Position data [10^{STM} μm]	Servo motor speed [r/min]	Acceleration time constant [ms]	Deceleration time constant [ms]	Dwell time [ms]	Auxiliary function	M code
1	5.00	3000.00	100	150	0	1	05
2	5.00	2000.00	Disabled	Disabled	0	3	10
3	15.00	1000.00	Disabled	Disabled	0	8	15

Operation sequence
1) Starting with point table No. 1
2) Varying the speed and executing point table No. 2
3) Varying the speed and executing point table No. 3
4) Executing point table No. 1 used at start-up in CW direction when "8" is set to the auxiliary function of point table No. 3
5) Repeating the above execution in the sequence of 1) to 2) to 3) to 4) to 2) to 3) to 4)

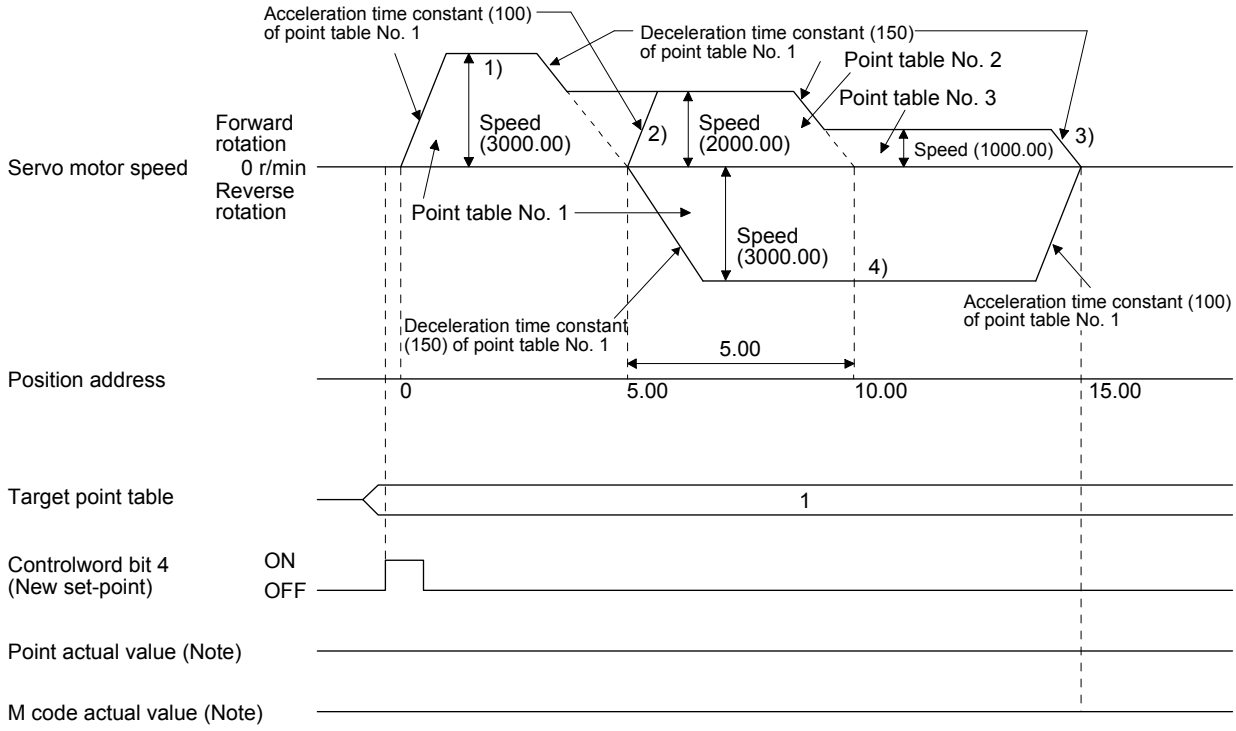

Note. "Point actual value" and "M code actual value" are not outputted in an automatic continuous operation.

4) Varying-speed operation by relative value command method
Example. Operations when "10" is set to the auxiliary function of point table No. 3

Point table No.	Position data [10^{STM} μm]	Servo motor speed [r/min]	Acceleration time constant [ms]	Deceleration time constant [ms]	Dwell time [ms]	Auxiliary function	M code
1	5.00	3000.00	100	150	0	3	05
2	10.00	2000.00	150	200	0	1	10
3	5.00	1000.00	300	100	0	10	15

Operation sequence
1) Starting with point table No. 1
2) Varying the speed and executing point table No. 2
3) Varying the speed and executing point table No. 3
4) Varying the speed, and executing point table No. 1 when "10" is set to the auxiliary function of point table No. 3
5) Repeating the above execution in the sequence of 1) to 2) to 3) to 4) to 2) to 3) to 4)

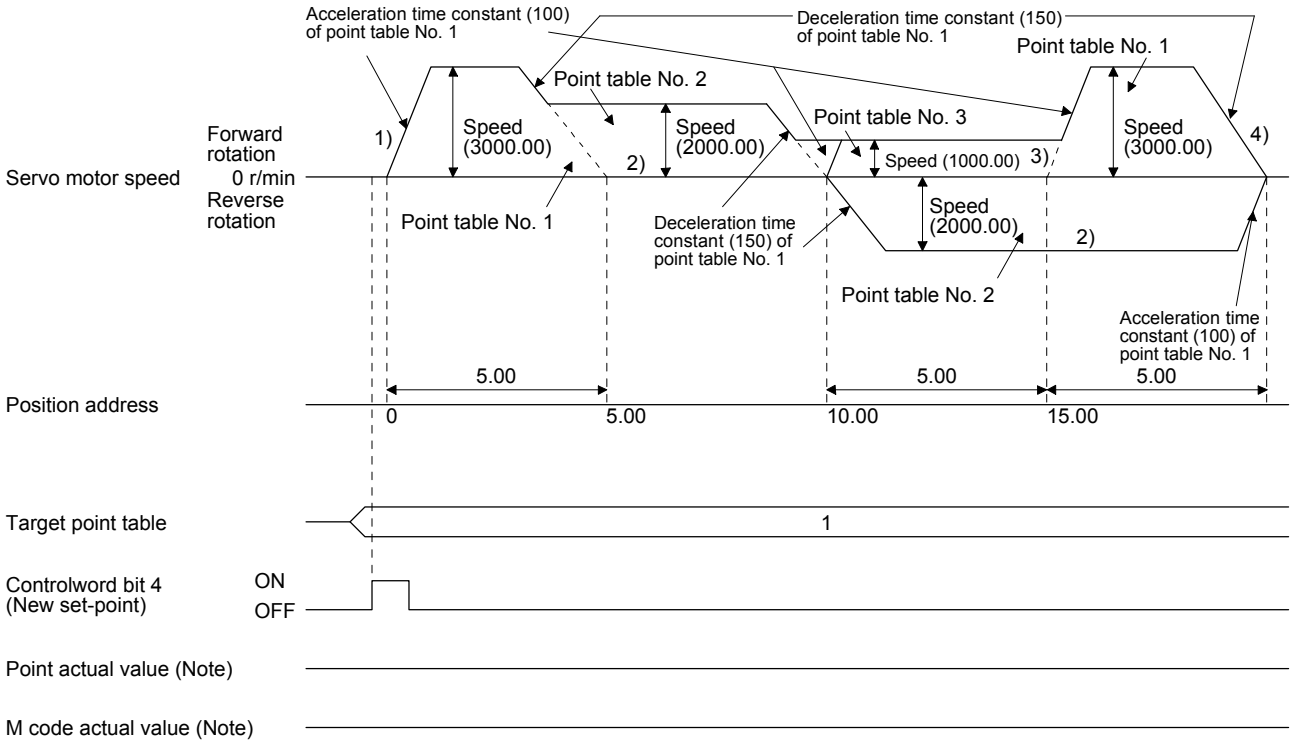

Note. "Point actual value" and "M code actual value" are not outputted in an automatic continuous operation.

(e) Temporary stop/restart

When "Controlword bit 8 (HALT)" is switched on during automatic operation, the servo motor decelerates with the deceleration time constant of the point table being executed, and then stops temporarily. When "Controlword bit 8 (HALT)" is switched off during a temporary stop, the servo motor starts for the remaining travel distance.

"Controlword bit 4 (New set-point)" does not function even it is switched on during a temporary stop.

When any of the following conditions is satisfied during a temporary stop, the travel remaining distance is cleared.

・The control mode is changed from the point table mode (pt) to the Jog mode (jg).

・The servo motor enters the servo-off status.

The temporary stop/restart input functions in the following status.

Operation status	Point table mode (pt)	Jog mode (jg)	Homing mode (hm)
During a stop		Temporary stop	Temporary stop
During acceleration	Temporary stop	Temporary stop	Temporary stop
At a constant speed	Temporary stop	Temporary stop	Temporary stop
During deceleration		Temporary stop	Temporary stop
During a temporary stop	Restart	Restart	Stop

1) When the servo motor is rotating

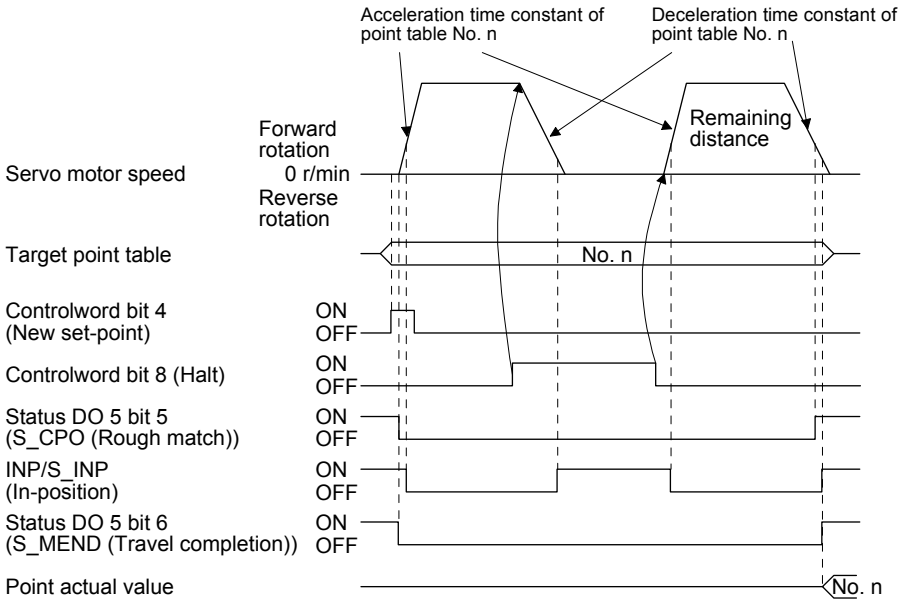

2) During dwell

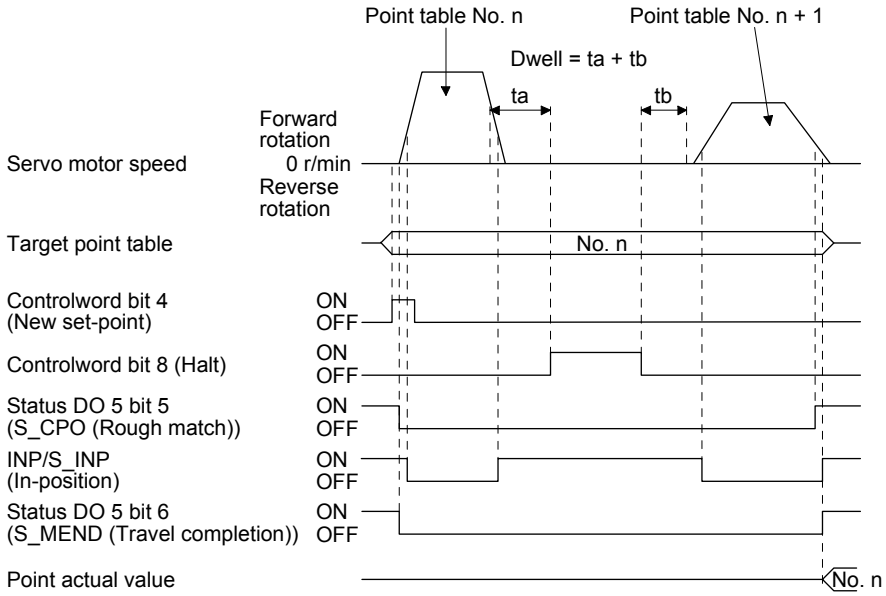

(f) Suspension of point table operation

To suspend the point table operation or change the operation pattern, stop the servo motor with "Controlword bit 8 (HALT)" and switch the control mode to Jog operation (jg) with "Modes of operation". The remaining travel distance is cleared.

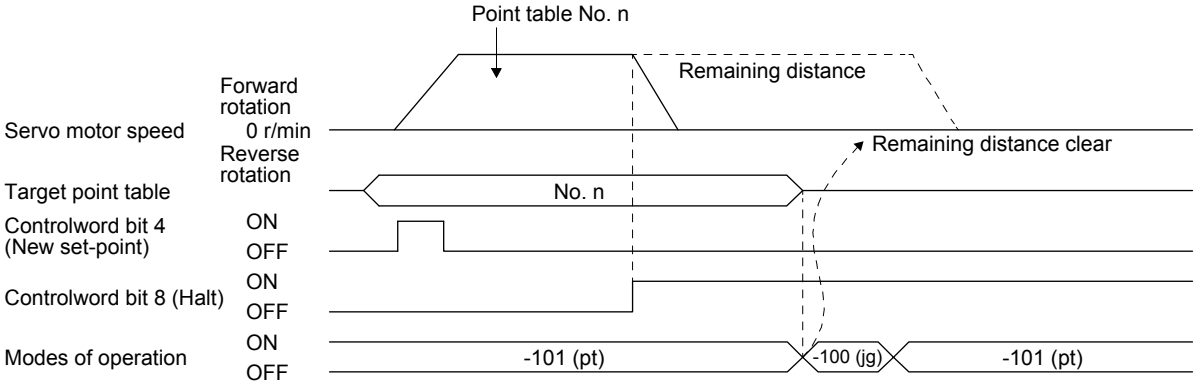

18.4 Jog mode (jg)

For the machine adjustment, home position adjustment, and others, positioning to any point is possible with the JOG mode (jg).

(1) Setting

According to the purpose of use, set objects and parameters as shown below. In this case, "Target point table" is disabled.

Item	Object/parameter to be used	Setting
Jog mode (jg) selection	Modes of operation	Set "-100".
Servo motor rotation direction	[Pr. PA14]	Refer to (2) in this section.
JOG speed	Profile velocity	Set the servo motor speed.
Acceleration time constant	Profile Acceleration	Set the acceleration time constant.
Deceleration time constant	Profile deceleration	Set the deceleration time constant.
Speed limit	Max profile velocity	Set a speed limit value for during operation.

(2) Servo motor rotation direction

[Pr. PA14] setting	Servo motor rotation direction	
	Forward rotation start (Controlword bit 4 (Rotation start): on Controlword bit 5 (Direction): off)	Reverse rotation start (Controlword bit 4 (Rotation start): on Controlword bit 5 (Direction): on)
0	CCW rotation	CW rotation
1	CW rotation	CCW rotation

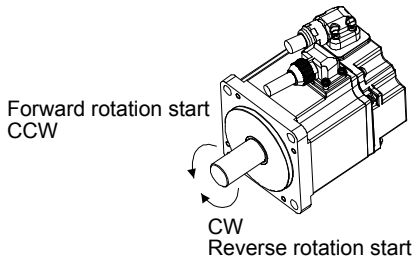

[Pr. PA14]: 0

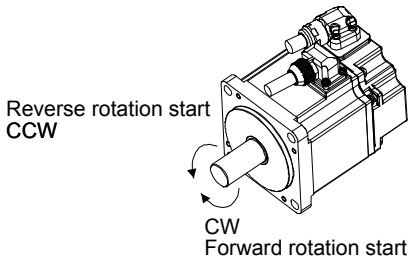

[Pr. PA14]: 1

(3) Operation

Switching on "Controlword bit 4 (Rotation start)" starts at the set speed, acceleration time constant and deceleration time constant. Switching off "Controlword bit 4 (Rotation start)" makes s deceleration to a stop. Refer to (2) in this section for rotation direction.

Item	Object to be used	Setting
Start/stop	Controlword	Set start/stop in "Controlword bit 4 (Rotation start)". The setting is shown as follows: On: start Off: deceleration to a stop

(4) Timing chart

(a) When operating at a constant speed

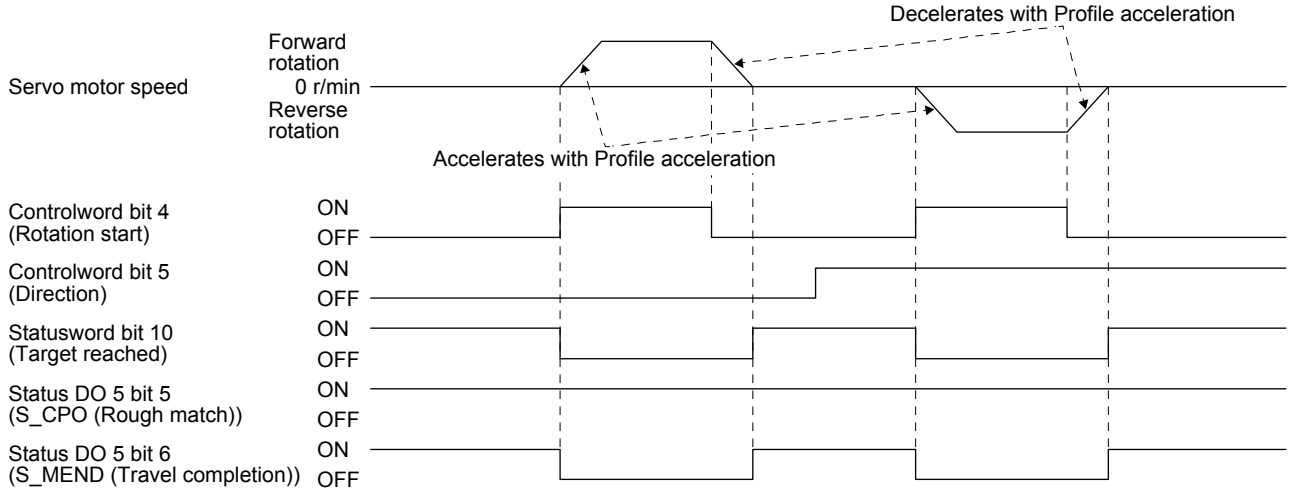

(b) When changing the speed during operation

You can change the servo motor speed by changing the "Profile velocity" during operation. However, the servo motor speed cannot be changed during deceleration. The acceleration time constant and the deceleration time constant can be changed only while the servo motor is stopped.

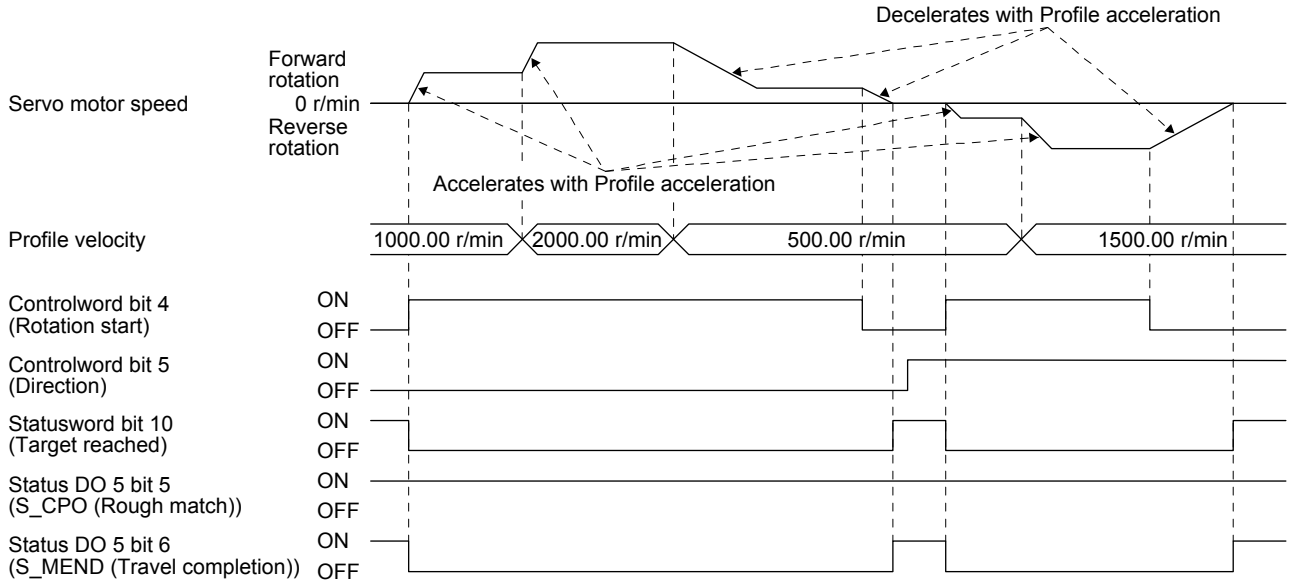

18.5 Point table setting method

18.5.1 Point table setting method with MR Configurator2

(1) Setting procedure

Click "Positioning-data" in the menu bar, and click "Point Table" in the menu.

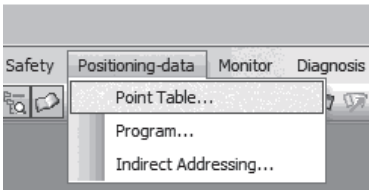

The following window will be displayed.

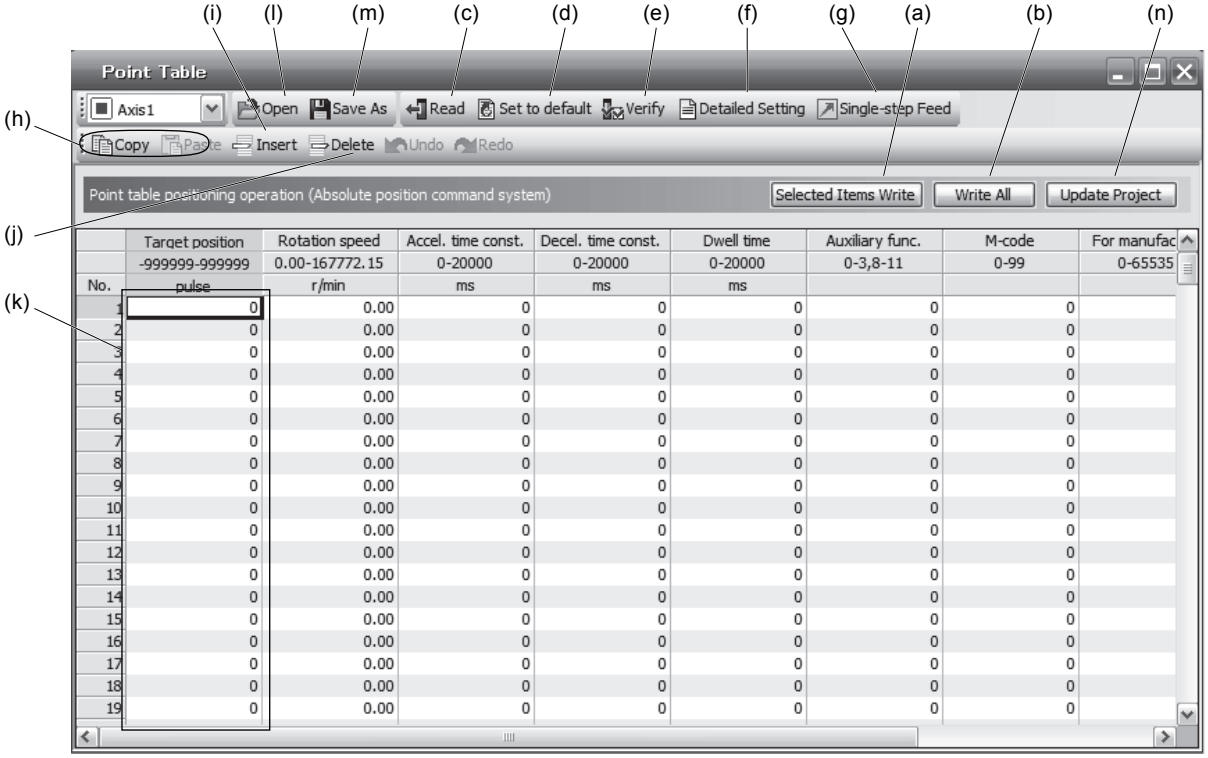

(a) Writing point table data (a)

Select changed point table data, and click "Selected Items Write" to write the changed point table data to the servo amplifier.

(b) Writing all point table data (b)

Click "Write All" to write all the point table data to the servo amplifier.

(c) Reading all point table data (c)

Click "Read" to read all the point table data from the servo amplifier and display them.

(d) Initial setting of point table data (d)
Click "Set to default" to initialize all the data of point table No. 1 to 255. This function also initializes data currently being edited.

(e) Verifying point table data (e)
Click "Verify" to verify all the data displayed and data of the servo amplifier.

(f) Detailed setting of point table data (f)
Click "Detailed Setting" to change position data range and unit in the point table window. Refer to (2) in this section for details.

(g) Single-step feed (g)
Click "Single-step Feed" to perform the single-step feed test operation. Refer to section 4.5.1 (1) (e) for details.

(h) Copy and paste of point table data (h)
Click "Copy" to copy the selected point table data. Click "Paste" to paste the copied point table data.

(i) Inserting point table data (i)
Click "Insert" to insert a block before the selected point table No. The selected block and later will be shifted down by one.

(j) Deleting point table data (j)
Click "Delete" to delete the selected block of the point table No. The selected block and later will be shifted up by one.

(k) Changing point table data (k)
After selecting the data to be changed, enter a new value, and click "Enter". You can change the displayed range and unit with (1) (f) "Detailed setting of point table data" in this section.

(l) Reading point table data (l)
Click "Open" to read the point table data.

(m) Saving point table data (m)
Click "Save As" to save the point table data.

(n) Updating project (n)
Click "Update Project" to update the point table data to a project.

(2) Detailed setting window

The position data range and unit can be changed with the detailed setting in the point table window. For the position data range and unit of [Pr. PT01] setting, refer to section 18.3.2. To reflect the setting for the corresponding parameter, click "Update Project" in the point table window.

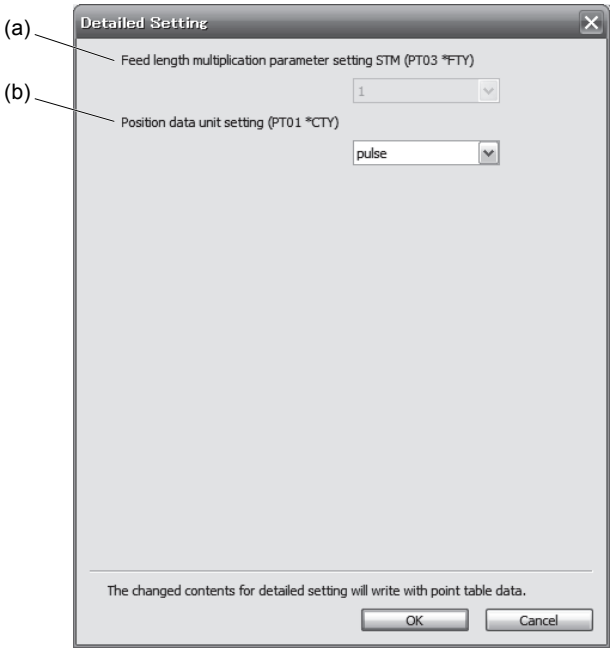

(a) Feed length multiplication parameter setting STM (PT03 *FTY): 2)
Select a feed length multiplication from 1/10/100/1000.

(b) Position data unit setting (PT01 *CTY): 3)
Select a unit of position data from mm/inch/pulse.

18.5.2 Point table setting method with objects

(1) For EtherCAT

To change the point table of the servo amplifier on the master (controller), write values to the following objects in the SDO communication. However, once the power supply is shut off, the changed setting is not held at the next startup. To hold the changed setting even after the power supply is shut-off, save the point table setting value to EEP-ROM using Store Parameters (1010h).

Index	Sub	Object	Name	Data Type	Access	Default	Description
2801h	0	ARRAY	Point table 001	U8	ro	7	Number of entries
	1		Point data	I32	rw		Set the position data of the point table No. 1.
	2		Speed	I32	rw		Set the servo motor speed of the point table No. 1.
	3		Acceleration	I32	rw		Set the acceleration time constant of the point table No. 1.
	4		Deceleration	I32	rw		Set the deceleration time constant of the point table No. 1.
	5		Dwell	I32	rw		Set the dwell time of the point table No. 1.
	6		Auxiliary	I32	rw		Set the auxiliary function of the point table No. 1.
	7		M code	I32	rw		Set the M code of the point table No. 1.
. . .	. . .	. . .	. . .	. . .	. . .		. . .
28FFh	0	ARRAY	Point table 255	U8	ro	7	Number of entries
	1		Point data	I32	rw		Set the position data of the point table No. 255.
	2		Speed	I32	rw		Set the servo motor speed of the point table No. 255.
	3		Acceleration	I32	rw		Set the acceleration time constant of the point table No. 255.
	4		Deceleration	I32	rw		Set the deceleration time constant of the point table No. 255.
	5		Dwell	I32	rw		Set the dwell time of the point table No. 255.
	6		Auxiliary	I32	rw		Set the auxiliary function of the point table No. 255.
	7		M code	I32	rw		Set the M code of the point table No. 255.

(2) For PROFINET

To change the point table of the servo amplifier on the master (controller), write values to the following objects in the Acyclic Data Exchange communication. However, once the power supply is shut off, the changed setting is not held at the next startup. To hold the changed setting even after the power supply is shut-off, save the point table setting value to EEP-ROM using Store Parameters (P4112).

PNU	Sub	Access	Name	Type	Default value	Description
10241	0	R/W	Point data	Array [7] Integer32		Set the position data of the point table No. 1.
	1		Speed			Set the servo motor speed of the point table No. 1.
	2		Acceleration			Set the acceleration time constant of the point table No. 1.
	3		Deceleration			Set the deceleration time constant of the point table No. 1.
	4		Dwell			Set the dwell time of the point table No. 1.
	5		Auxiliary			Set the auxiliary function of the point table No. 1.
	6		M code			Set the M code of the point table No. 1.
. . .	. . .	. . .	. . .	. . .	. . .	. . .
10495	0	R/W	Point data	Array [7] Integer32		Set the position data of the point table No. 255.
	1		Speed			Set the servo motor speed of the point table No. 255.
	2		Acceleration			Set the acceleration time constant of the point table No. 255.
	3		Deceleration			Set the deceleration time constant of the point table No. 255.
	4		Dwell			Set the dwell time of the point table No. 255.
	5		Auxiliary			Set the auxiliary function of the point table No. 255.
	6		M code			Set the M code of the point table No. 255.

19. How to use indexer

POINT

- Indexer method is available with servo amplifiers with software version B2 or later.
- In the absolute position detection system, rotating the shaft one revolution or more during power-off may erase the home position. Therefore, do not rotate the shaft one revolution or more during power-off. When the home position is erased, [AL. 90 Home position return incomplete warning] will occur. Then, execute the home position return again.
- For the home position return, refer to respective communication method manuals of "MR-J4-_TM_ Servo Amplifier Instruction Manual".
- The indexer method cannot be used in the fully closed loop system and linear servo system. The combination of the indexer method and fully closed loop system/linear servo system triggers [AL. 37 Parameter error].
- There are the following restrictions on [Pr. PA06 Number of gear teeth on machine side] and the servo motor speed (N).
  - When CMX ≤ 2000, N < 3076.7 r/min
  - When CMX > 2000, N < (3276.7 - CMX)/10 r/min

  When the servo motor is operated at a servo motor speed higher than the limit value, [AL. E3 Absolute position counter warning] will occur.

See the following table for the No. of each object mentioned in this chapter.

Object	No.	
	EtherCAT	PROFINET
Modes of operation	Index: 6060h	PNU: 24672, Sub: 0
Controlword	Index: 6040h	PNU: 24640, Sub: 0
Statusword	Index: 6041h	PNU: 24641, Sub: 0
Profile velocity	Index: 6081h	PNU: 24705, Sub: 0
Profile acceleration	Index: 6083h	PNU: 24707, Sub: 0
Profile deceleration	Index: 6084h	PNU: 24708, Sub: 0
Positive torque limit value	Index: 60E0h	PNU: 24800, Sub: 0
Negative torque limit value	Index: 60E1h	PNU: 24801, Sub: 0
Target point table	Index: 2D60h	PNU: 11616, Sub: 0
Status DO 1	Index: 2D11h	PNU: 11537, Sub: 0
Status DO 5	Index: 2D15h	PNU: 11541, Sub: 0
Point actual value	Index: 2D69h	PNU: 11625, Sub: 0
Torque limit value2	Index: 2D6Bh	PNU: 11627, Sub: 0

19.1 Specification list

Item			Description
Control mode	Indexer mode (idx)	Operational specifications	Positioning by specifying the station position The maximum number of divisions: 255
		Speed command input	Setting the servo motor speed, an acceleration time constant and deceleration time constant via network
		System	Rotation direction specifying indexer/shortest rotating indexer
		Torque limit	Limits the servo motor torque.
		Rotation direction specifying indexer	Positioning to the specified station. Rotation direction settable
		Shortest rotating indexer	Positioning to the specified station. Rotates in the shorter direction from the current position.
	Jog mode (jg)	JOG operation	Executes an inching operation via network. When the servo motor is stopping, deceleration to a stop is executed regardless of the station.
		Station JOG operation	Executes an inching operation via network. When the servo motor is stopping, positioning is executed to the nearest station at which the servo motor can decelerate to a stop.
	Homing mode (hm)	Torque limit changing dog type (front end detection Z-phase reference)	For the descriptions of the home position return types, refer to respective communication method manuals of "MR-J4-_TM_ Servo Amplifier Instruction Manual".
		Torque limit changing data set type	
		Homing on current position (method 35)	
		Homing on current position (method 37)	
Other functions			Absolute position detection/external limit switch

19.2 Switching power on for the first time

POINT

- Set [Pr. PA01] to "_ _ _ 8" (positioning mode (indexer method)).
- When using EtherCAT, set the mapping objects of 3rd RxPDO map (1602h) and 2nd TxPDO map (1A01h) in the PDO mapping. For details, refer to 3.3 of "MR-J4-_TM_ Servo Amplifier Instruction Manual (EtherCAT)".
- When using PROFINET, set the communication format to Telegram 103. For details, refer to section 3 of "MR-J4-_TM_ Servo Amplifier Instruction Manual (PROFINET)".
- In the indexer method, "Touch probe function" is disabled.
- In the indexer method, "Position actual value", "Touch probe status", "Touch probe pos1 pos value", "Touch probe pos1 neg value", "Touch probe pos2 pos value" and "Touch probe pos2 neg value" will be always 0.

When switching power on for the first time, follow this section to make a startup.

Startup procedure

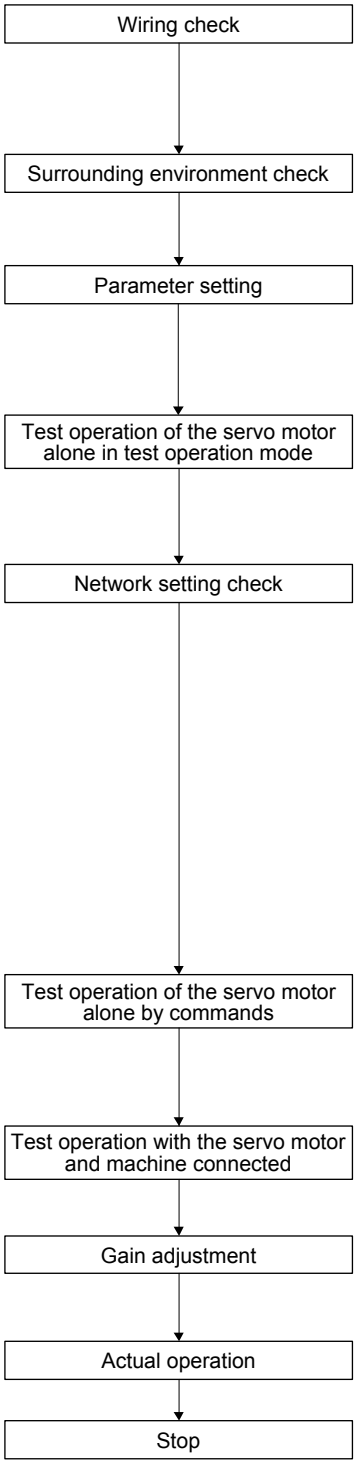

Check whether the servo amplifier and servo motor are wired correctly using visual inspection, DO forced output function (section 4.5.1), etc. (Refer to section 4.1.2.)

Check the surrounding environment of the servo amplifier and servo motor. (Refer to section 4.1.3.)

Set [Pr. PA01] to "_ _ _ 8" (positioning mode (indexer method)). Set the parameters as necessary for the regenerative option selection, etc. (Refer to chapter 5.)

With the servo motor disconnected from the machine, use the test operation mode and check whether the servo motor correctly rotates at the slowest speed possible. Refer to section 4.5 for the test operation mode.

Check the network setting to connect the controller.

1) When using EtherCAT, set the mapping objects of 3rd RxPDO map (1602h) and 2nd TxPDO map (1A01h) in the PDO mapping.

2) When using PROFINET, set the communication format to Telegram 103.

For details, refer to respective communication method manuals of "MR-J4-_TM_ Servo Amplifier Instruction Manual".

For the test operation, with the servo motor disconnected from the machine and operated, give commands to the servo amplifier. Operate the servo motor at the speed as low as possible and check whether the servo motor rotates correctly.

Connect the servo motor with the machine, and check machine motions by transmitting operation commands from the controller.

Make gain adjustment to optimize the machine motions. (Refer to chapter 6.)

Stop giving commands and stop operation.

19.3 Indexer mode (idx)

POINT

- In the absolute position detection system, there are the following restrictions on [Pr. PA06 Number of gear teeth on machine side] and the servo motor speed (N).
  - When CMX ≤ 2000, N < 3076.7 r/min
  - When CMX > 2000, N < 3276.7 - CMX r/min

  When the servo motor is operated at a servo motor speed higher than the limit value, [AL. E3 Absolute position counter warning] will occur.
- When the same next station No. is specified as station No. of the current position and a positioning operation is executed, the motor does not start because the travel distance is decided as "0".

19.3.1 Indexer mode (idx)

(1) Logic of indexer

The circumference of the load side (360 degrees) can be divided into a maximum of 255 stations. Positioning is executed to a station selected with "Target point table". The following diagram is an example for when [Pr. PA14] is set to "0".

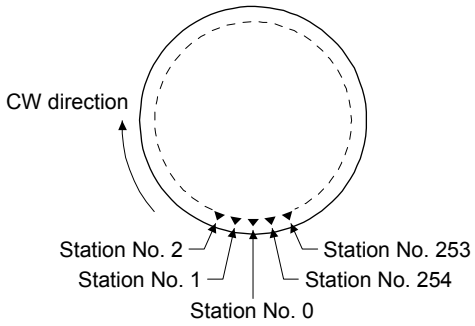

The station No. 0 is set as a home position. Set the number of stations with [Pr. PT28].

(2) Rotation direction

There are two operation methods: Rotation direction specifying indexer, which always rotates in a fixed direction and executes positioning to a station; Shortest rotating indexer, which automatically changes a rotation direction to the shortest distance and executes positioning to a station.

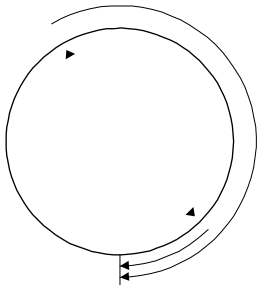

Rotation direction specifying indexer

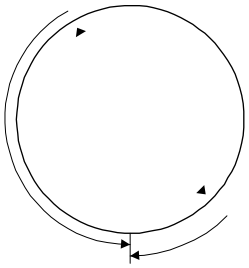

Shortest rotating indexer

19.3.2 Rotation direction specifying indexer

In this operation mode, the servo motor rotates in a fixed direction to execute positioning to a station. Select a station No. with "Target point table" to execute positioning. For the servo motor speed, acceleration time constant and deceleration time constant during operation, the values set in the object are used.

(1) Setting

Set objects and parameters as shown below.

Item	Object/parameter to be used	Setting
Indexer mode (idx) selection	Modes of operation	Set "-103".
Next station position	Target point table	Set any next station No.
Rotation direction specifying indexer selection	Controlword	Turn off "Controlword bit 6 (Operation mode)".
Servo motor speed	Profile velocity	Set the servo motor speed.
Acceleration time constant	Profile Acceleration	Set the acceleration time constant.
Deceleration time constant	Profile deceleration	Set the deceleration time constant.
Speed limit	Max profile velocity	Set a speed limit value for during operation.
Torque limit (Note)	Positive torque limit value Negative torque limit value	Set a torque limit value in operation.
	Torque limit value2	Set a torque limit value in stop.
	[Pr. PT39]	Set a time period for switching the torque limit value in operation to in stop.

Note. The torque limit will change from the setting value of "Torque limit value2" to the setting value of "Positive torque limit value" or "Negative torque limit value" when "Controlword bit 4 (New set-point)" is inputted. After the output of S_MEND (Travel completion) and the time set with [Pr. PT39] has passed, the torque limit will be switched from the set value of "Positive torque limit value" or "Negative torque limit value" to the set value of "Torque limit value2".

(2) Other parameter settings

(a) Setting assignment direction of station No.

Select an assignment direction of station No. with [Pr. PA14].

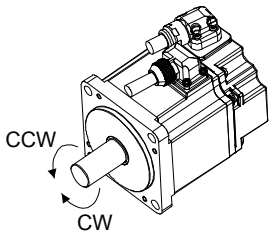

[Pr. PA14] setting	Setting assignment direction of station No.
0	Next station No. will be assigned in CW direction in order of 1, 2, 3…
1	Next station No. will be assigned in CCW direction in order of 1, 2, 3…

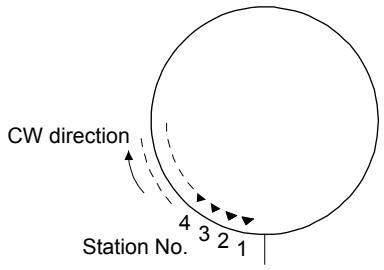

[Pr. PA14]: 0 (initial value)

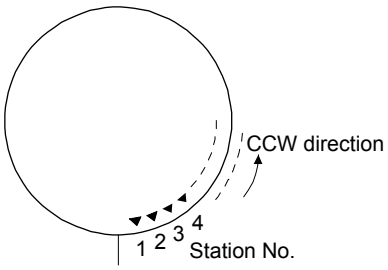

[Pr. PA14]: 1

(b) Setting number of stations

Set a number of stations to [Pr. PT28].

	[Pr. PT28] setting				
Number of stations	2	3	4	. . .	255
Station No.	No. 1 No. 0	No. 1 No. 2 No. 0	No. 2 No. 1 No. 3 No. 0	. . .	No. 1 No. 0 No. 254

(3) Operation

Selecting the next station with "Target point table" and switching on "Controlword bit 4 (New set-point)" starts positioning to the selected next station at the set speed, acceleration time constant and deceleration time constant.

Item	Object to be used	Setting
Rotation direction selection	Controlword	Set the rotation direction in "Controlword bit 5 (Direction)". The setting is shown as follows: Off: Station No. decreasing direction On: Station No. increasing direction
Station No. selection	Target point table	Set a station No. at which positioning starts.
Start	Controlword	Switch on "Controlword bit 4 (New set-point)".

(4) Timing chart

POINT

- Be sure to perform a home position return. Executing positioning operation without home position return will trigger [AL. 90 Home position return incomplete warning] and "Controlword bit 4 (New set-point)" will be disabled.
- When a value of a next station position exceeds the value set in [Pr. PT28 Number of stations per rotation], "Controlword bit 4 (New set-point)" will be disabled.

The following timing chart shows that an operation is performed at a stop of the station No. 0 when servo-on.

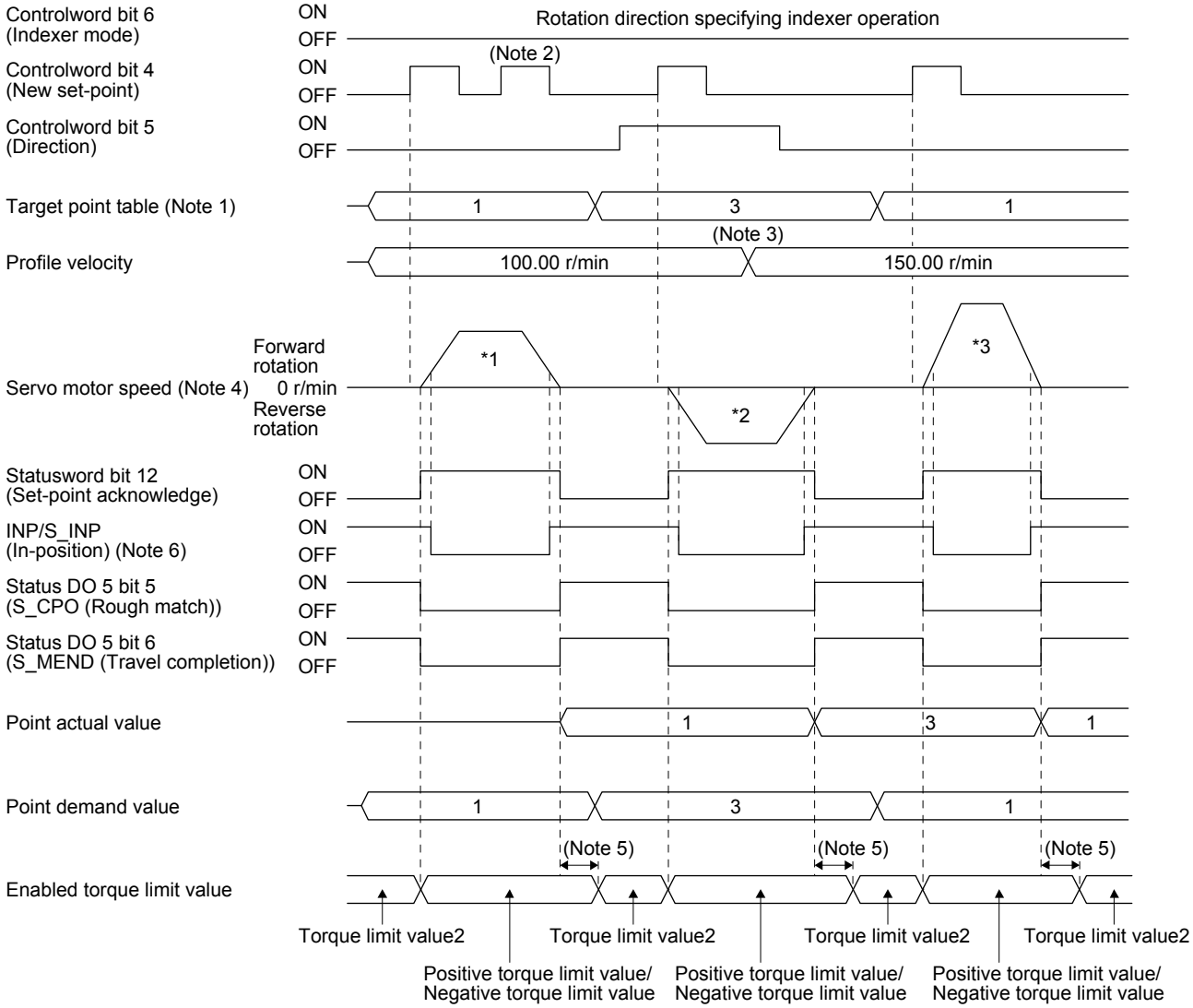

Note 1. When the specified station No. exceeds the value set in [Pr. PT28 Number of stations per rotation] -1, the servo motor does not operate.
2. "Controlword bit 4 (New set-point)" is not received when the rest of command travel distance is other than "0".
3. Switching "Profile velocity" during the servo motor rotation does not enable this.
4. The following shows the operations to be executed.

Operation	*1	*2	*3
Next station No.	No. 1	No. 3	No. 1
Servo motor speed	100.00 r/min	100.00 r/min	150.00 r/min
Positioning	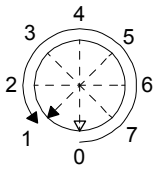	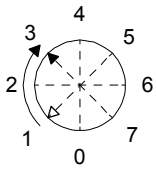	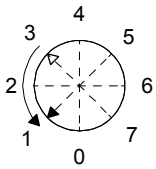

5. A delay time can be set with [Pr. PT39].
6. After power-on, this turns on if the value is within the in-position range of the corresponding station position.

19.3.3 Shortest rotating indexer operation

This operation mode automatically changes a rotation direction to the shortest distance to execute positioning to a station.
Select a station No. with "Target point table" to execute positioning. For the servo motor speed, acceleration time constant and deceleration time constant during operation, the values set in the object are used.

(1) Setting
Set objects and parameters as shown below.

Item	Object/parameter to be used	Setting
Indexer mode (idx) selection	Modes of operation	Set "-103".
Next station position	Target point table	Set any next station No.
Shortest rotating indexer selection	Controlword	Switch on "Controlword bit 6 (Operation mode)".
Servo motor speed	Profile velocity	Set the servo motor speed.
Acceleration time constant	Profile Acceleration	Set the acceleration time constant.
Deceleration time constant	Profile deceleration	Set the deceleration time constant.
Speed limit	Max profile velocity	Set a speed limit value for during operation.
Torque limit (Note)	Positive torque limit value Negative torque limit value	Set a torque limit value for during operation.
	Torque limit value2	Set a torque limit value for during stop.
	[Pr. PT39]	Set a time period for switching the torque limit value in operation to in stop.

Note. The torque limit will change from the setting value of "Torque limit value2" to the setting value of "Positive torque limit value" or "Negative torque limit value" when "Controlword bit 4 (New set-point)" is inputted. After the output of S_MEND (Travel completion) and the time set with [Pr. PT39] has passed, the torque limit will be switched from the set value of "Positive torque limit value" or "Negative torque limit value" to the set value of "Torque limit value2".

(2) Other parameter settings
The setting is the same as in the rotation direction specifying indexer. Refer to section 19.3.2 (2).

(3) Operation
Selecting the next station with "Target point table" and switching on "Controlword bit 4 (New set-point)" starts positioning to the selected next station at the set speed, acceleration time constant and deceleration time constant.

Item	Object to be used	Setting
Station No. selection	Target point table	Set a station No. at which positioning starts.
Start	Controlword	Switch on "Controlword bit 4 (New set-point)".

(4) Timing chart

POINT

- Be sure to perform a home position return. Executing positioning operation without home position return will trigger [AL. 90 Home position return incomplete warning] and "Controlword bit 4 (New set-point)" will be disabled.
- When travel distances to a target station position from CCW and from CW are the same, the shaft will rotate to the station No. increasing direction.

This disables "Controlword bit 5 (Direction)". The following timing chart shows that an operation is performed at a stop of the station No. 0 when servo-on.

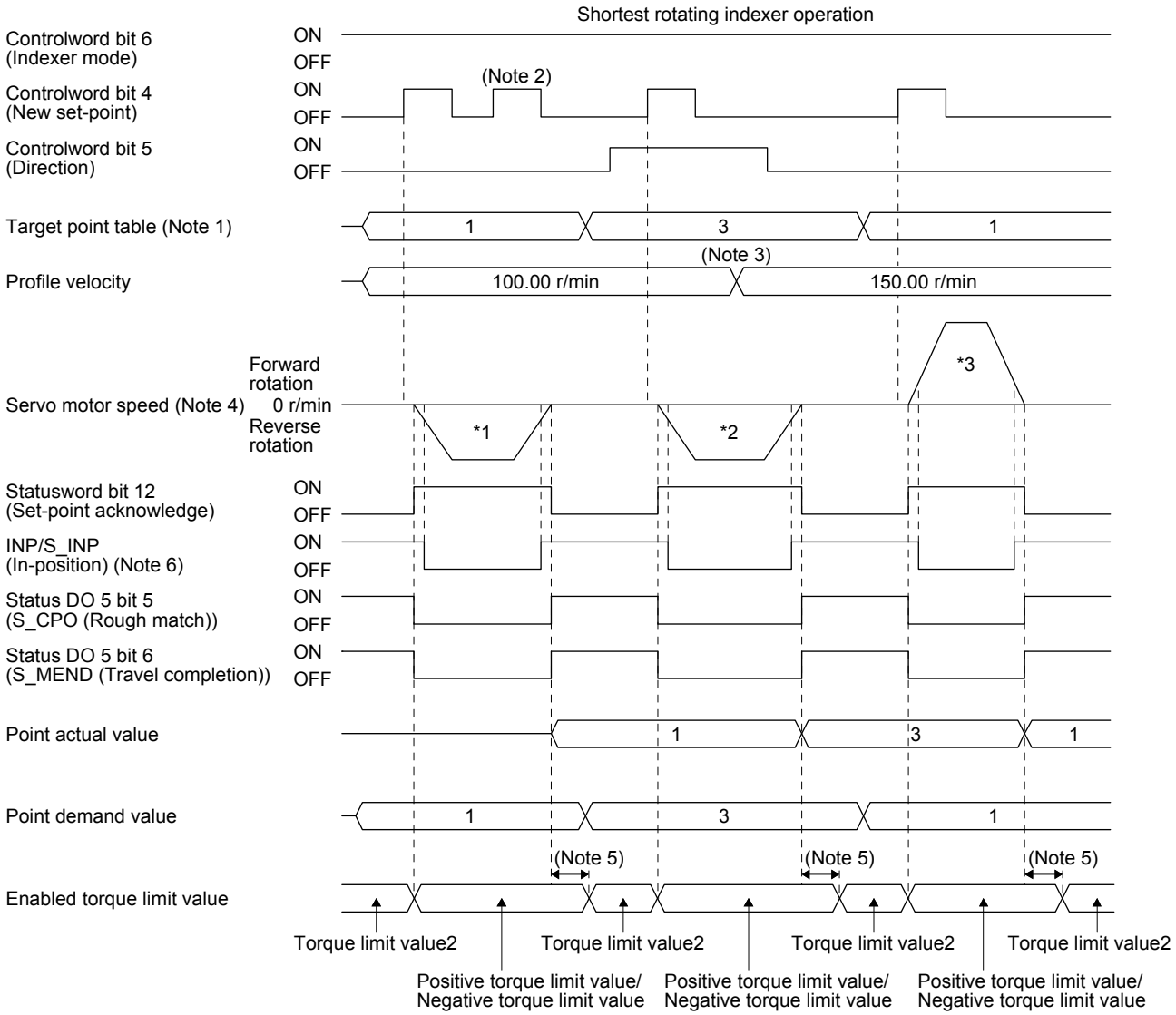

Note 1. When the specified station No. exceeds the value set in [Pr. PT28 Number of stations per rotation] -1, the servo motor does not operate.
2. "Controlword bit 4 (New set-point)" is not received when the rest of command travel distance is other than "0".
3. Switching "Profile velocity" during the servo motor rotation does not enable this.
4. The following shows the operations to be executed.

Operation	*1	*2	*3
Next station No.	No. 1	No. 3	No. 1
Servo motor speed	100.00 r/min	100.00 r/min	150.00 r/min
Positioning	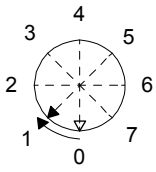	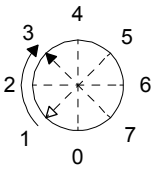	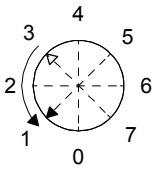

5. A delay time can be set with [Pr. PT39].
6. After power-on, this turns on if the value is within the in-position range of the corresponding station position.

19.4 Jog mode (jg)

POINT
●When the operation mode is changed during operation, inputting "Controlword bit 4 (Rotation start)" will be disabled. Switch on "Controlword bit 4 (Rotation start)" after the operation stops.

For the machine adjustment, home position adjustment, and others, you can shift the position to any position with the station JOG operation and JOG operation.

19.4.1 Station JOG operation

(1) Setting
According to the purpose of use, set objects and parameters as shown below. In this case, "Target point table" is disabled.

Item	Object/parameter to be used	Setting
Jog mode (jg) selection	Modes of operation	Set "-100".
Station JOG operation selection	[Pr. PT27]	Select "_ _ 0 _" (Station JOG operation).
Servo motor speed	Profile velocity	Set the servo motor speed.
Acceleration time constant	Profile Acceleration	Set the acceleration time constant.
Deceleration time constant	Profile deceleration	Set the deceleration time constant.
Speed limit	Max profile velocity	Set a speed limit value for during operation.

(2) Setting assignment direction of station No.
Select an assignment direction of station No. with [Pr. PA14].

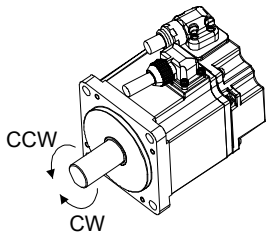

[Pr. PA14] setting	Assignment direction of station No.
0	Next station No. will be assigned in CW direction in order of 1, 2, 3…
1	Next station No. will be assigned in CCW direction in order of 1, 2, 3…

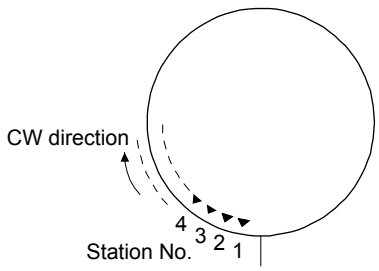

[Pr. PA14]: 0 (initial value)

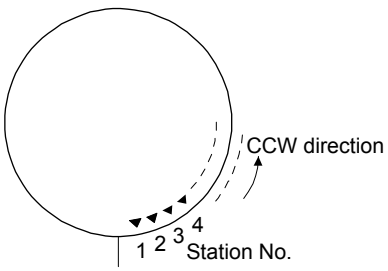

[Pr. PA14]: 1

(3) Operation

Turning on "Controlword bit 4 (Rotation start)" will start rotation to a direction specified with "Controlword bit 5 (Direction)", and turning off "Controlword bit 4 (Rotation start)" will execute a positioning to the closest station position which is possible to decelerate to a stop. However, the speed may not reach the specified speed because the shaft stops with the set time constant, depending on the setting value of deceleration time constant.

Item	Object to be used	Setting
Rotation direction selection	Controlword	Set the rotation direction in "Controlword bit 5 (Direction)". The setting is shown as follows: Off: Station No. decreasing direction On: Station No. increasing direction
Start/stop	Controlword	Set start/stop in "Controlword bit 4 (Rotation start)". The setting is shown as follows: On: start Off: stop at a station which is the closest and possible to decelerate to a stop

(4) Timing chart

The following timing chart shows that a JOG operation is performed at a stop of the station No. 0 when servo-on.

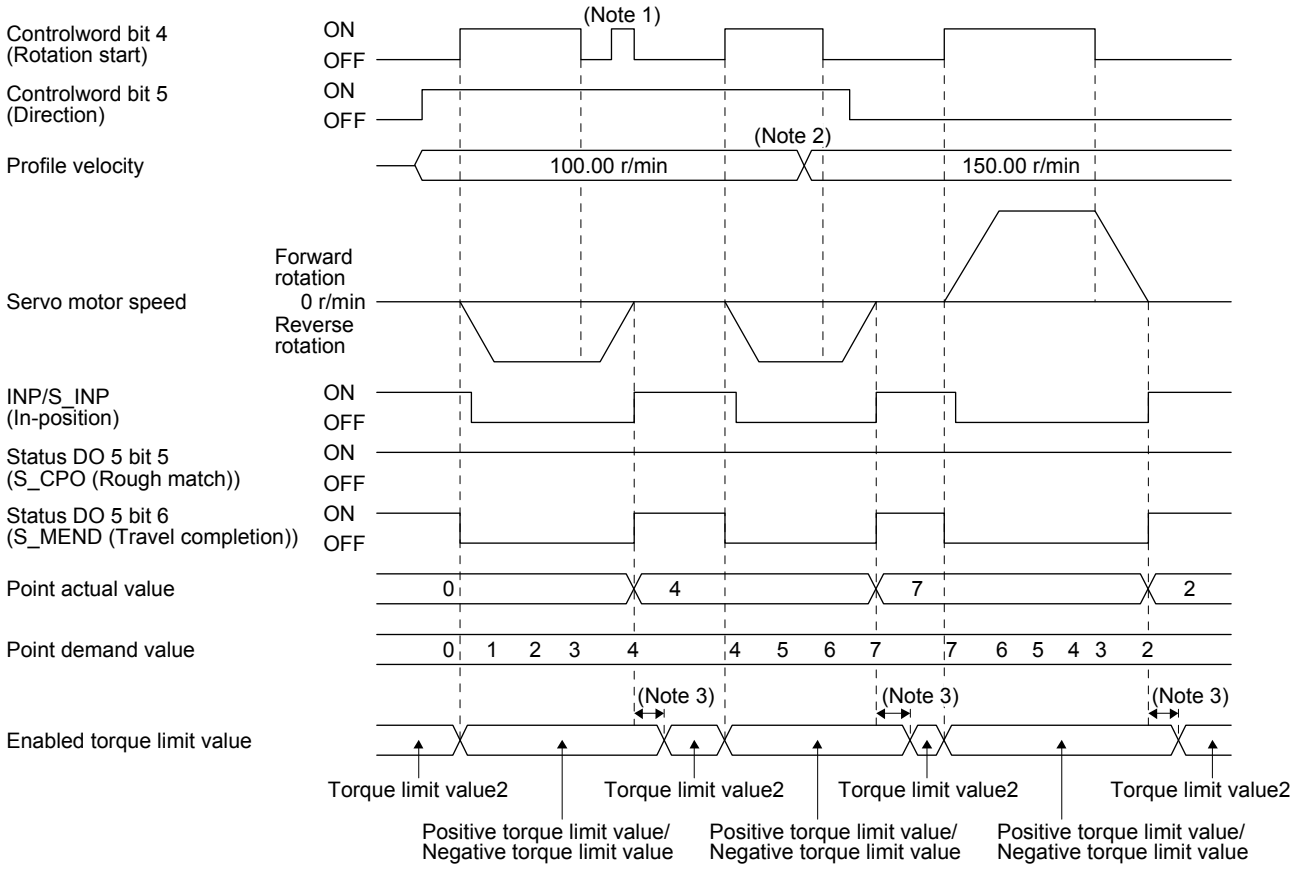

Note 1. "Controlword bit 4 (Rotation start)" is not received when the rest of command travel distance is other than "0".
2. Switching "Profile velocity" during the servo motor rotation does not enable this.
3. A delay time can be set with [Pr. PT39].

19.4.2 JOG operation

(1) Setting

According to the purpose of use, set objects and parameters as shown below. In this case, "Target point table" is disabled.

Item	Object/parameter to be used	Setting
Jog mode (jg) selection	Modes of operation	Set "-100".
JOG operation selection	[Pr. PT27]	Select "_ _ 1 _" (JOG operation).
Servo motor speed	Profile velocity	Set the servo motor speed.
Acceleration time constant	Profile Acceleration	Set the acceleration time constant.
Deceleration time constant	Profile deceleration	Set the deceleration time constant.
Speed limit	Max profile velocity	Set a speed limit value for during operation.

(2) Operation

Turning on "Controlword bit 4 (Rotation start)" will start rotation to a direction specified with "Controlword bit 5 (Direction)", and turning off "Controlword bit 4 (Rotation start)" will make deceleration to a stop regardless of the station position.

Item	Object to be used	Setting
Rotation direction selection	Controlword	Set the rotation direction in "Controlword bit 5 (Direction)". The setting is shown as follows: Off: Station No. decreasing direction On: Station No. increasing direction
Start/stop	Controlword	Set start/stop in "Controlword bit 4 (Rotation start)". The setting is shown as follows: On: start Off: decelerate to a stop regardless of the station position

(3) Timing chart

The following timing chart shows that a JOG operation is performed at a stop of the station No. 0 when servo-on.

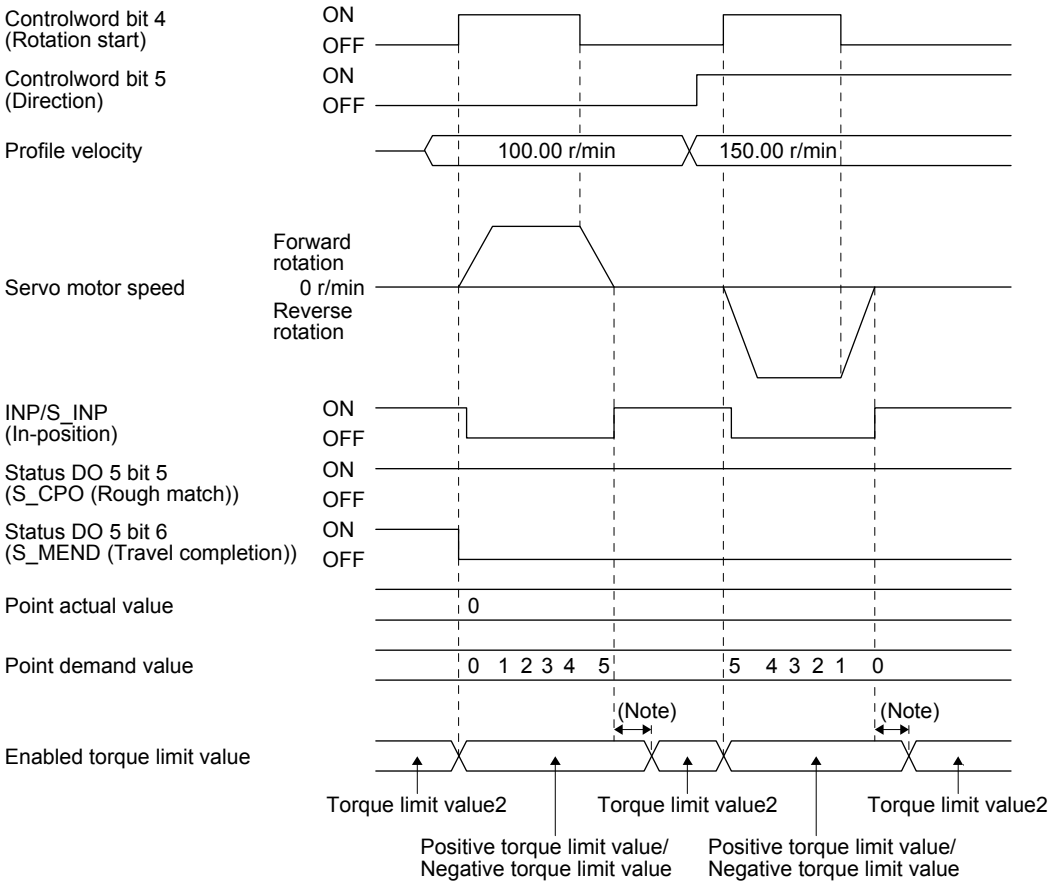

Note. A delay time can be set with [Pr. PT39].

APPENDIX

App. 1 When using the servo amplifier with the DC power supply input

App. 1.1 Connection example

⚠CAUTION ●Ensure that polarity (+/-) is correct. Otherwise, a burst, damage, etc. may occur.

For the signal and wirings not given in this section, refer to section 3.1.1 to 3.1.3.

(1) MR-J4-10TM to MR-J4-100TM

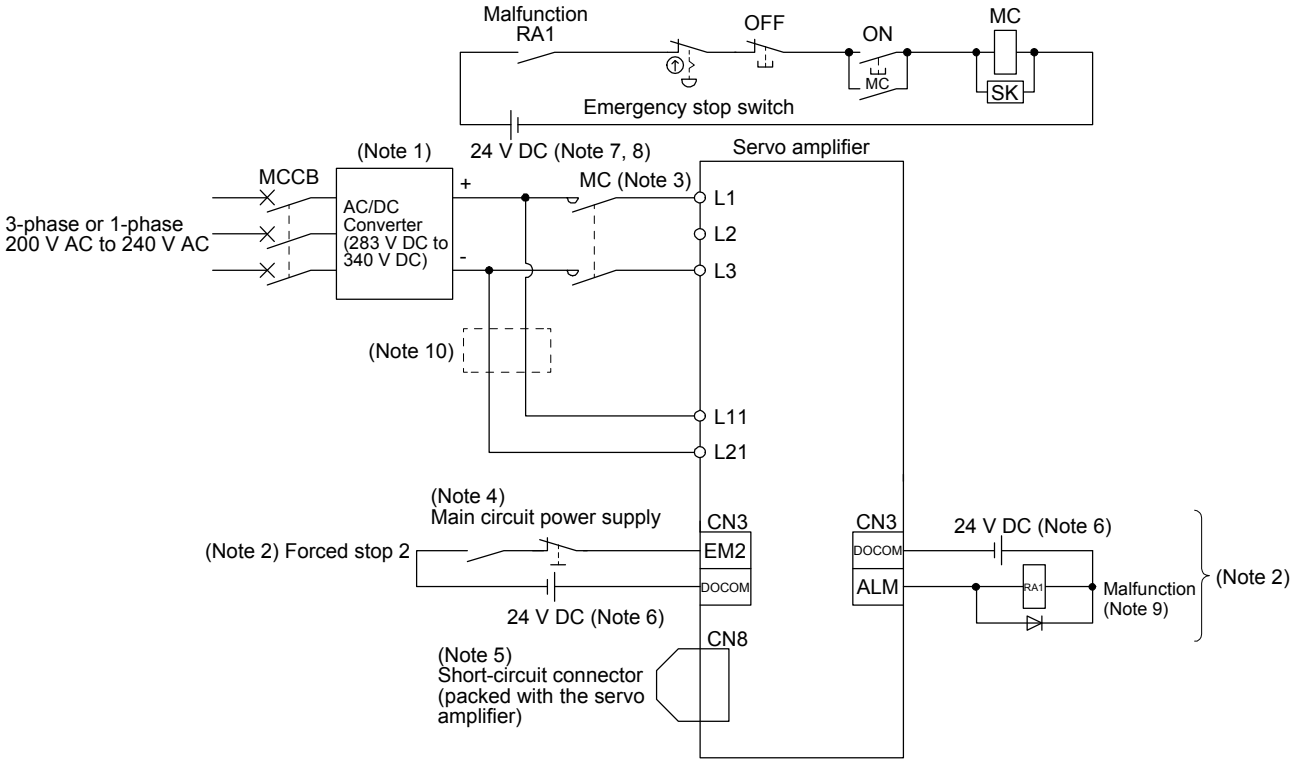

Note 1. For the power supply specifications, refer to section 1.3.
2. This diagram shows sink I/O interface. For source I/O interface, refer to section 3.8.3.
3. Use a magnetic contactor with an operation delay time (interval between current being applied to the coil until closure of contacts) of 80 ms or less. Depending on the main circuit voltage and operation pattern, bus voltage decreases, and that may cause the forced stop deceleration to shift to the dynamic brake deceleration. When dynamic brake deceleration is not required, delay the time to turn off the magnetic contactor.
4. Configure a circuit to turn off EM2 when the main circuit power is turned off to prevent an unexpected restart of the servo amplifier.
5. When not using the STO function, attach the short-circuit connector came with a servo amplifier.
6. The illustration of the 24 V DC power supply is divided between input signal and output signal for convenience. However, they can be configured by one.
7. Driving the on switch and off switch with the DC power supply meets IEC/EN 60204-1 requirements.
8. Do not use the 24 V DC interface power supply for the magnetic contactor DC power supply. Always use the power supply designed exclusively for the magnetic contactor.
9. If disabling ALM (Malfunction) output with the parameter, configure the power supply circuit which switches off the magnetic contactor after detection of alarm occurrence on the controller side.
10. When wires used for L11 and L21 are thinner than wires used for L1 and L3, use a fuse. (Refer to app. 1.4.)

(2) MR-J4-200TM to MR-J4-22KTM

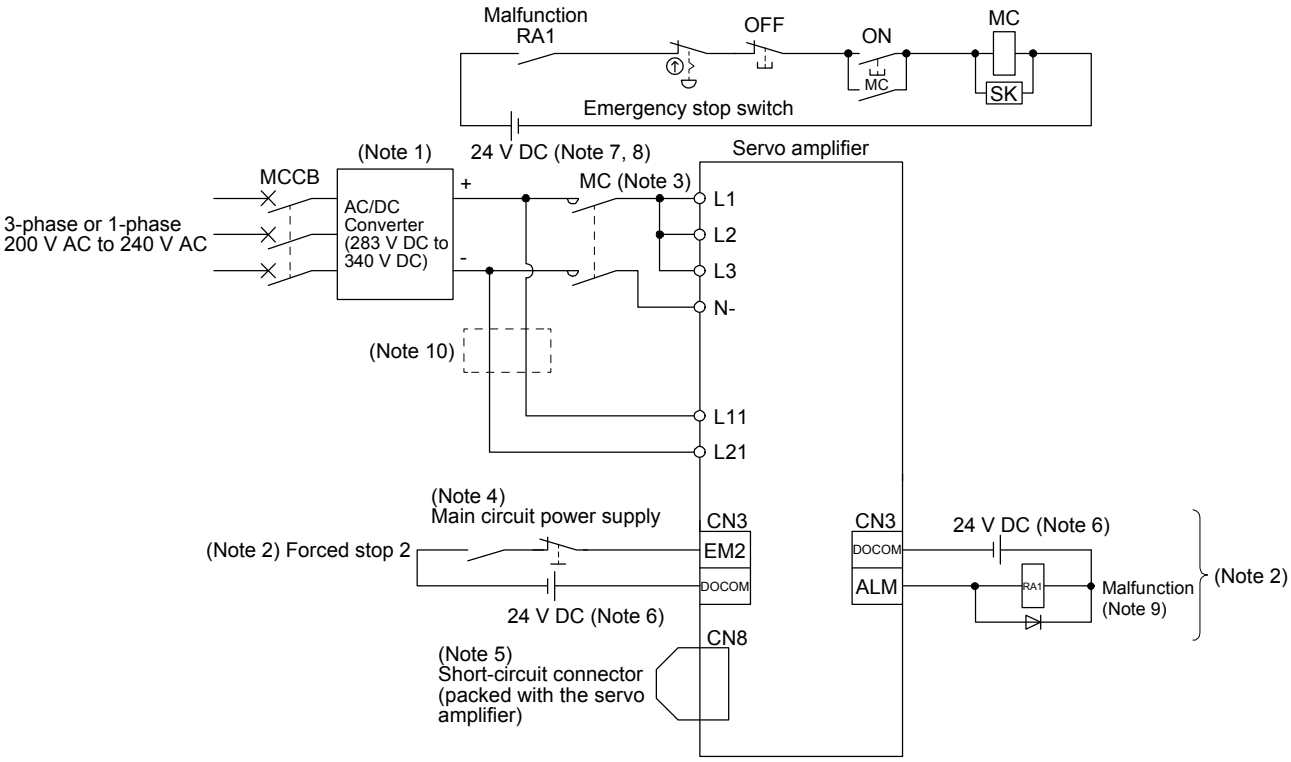

Note 1. For the power supply specifications, refer to section 1.3.
2. This diagram shows sink I/O interface. For source I/O interface, refer to section 3.8.3.
3. Use a magnetic contactor with an operation delay time (interval between current being applied to the coil until closure of contacts) of 80 ms or less (160 ms or less for 5 kW or more). Depending on the main circuit voltage and operation pattern, bus voltage decreases, and that may cause the forced stop deceleration to shift to the dynamic brake deceleration. When dynamic brake deceleration is not required, delay the time to turn off the magnetic contactor.
4. Configure a circuit to turn off EM2 when the main circuit power is turned off to prevent an unexpected restart of the servo amplifier.
5. When not using the STO function, attach the short-circuit connector came with a servo amplifier.
6. The illustration of the 24 V DC power supply is divided between input signal and output signal for convenience. However, they can be configured by one.
7. Driving the on switch and off switch with the DC power supply meets IEC/EN 60204-1 requirements.
8. Do not use the 24 V DC interface power supply for the magnetic contactor DC power supply. Always use the power supply designed exclusively for the magnetic contactor.
9. If disabling ALM (Malfunction) output with the parameter, configure the power supply circuit which switches off the magnetic contactor after detection of alarm occurrence on the controller side.
10. When wires used for L11 and L21 are thinner than wires used for L1, L2, L3, and N-, use a fuse. (Refer to app. 1.4.)

App. 1.2 Power supply capacity

The power supply capacity is the same as that for the AC power supply input. Refer to section 10.2 for details.

App. 1.3 Selection example of wires

POINT
●Selection conditions of wire size are as follows. Construction condition: Single wire set in midair Wiring length: 30 m or shorter

The following diagram shows the wires used for wiring. Use the wires given in this section or equivalent.

(1) Example of selecting the wire sizes
Use the 600 V grade heat-resistant polyvinyl chloride insulated wire (HIV wire) for wiring. The following shows the wire size selection example.

Table app. 1 Wire size selection example (HIV wire)

Servo amplifier	Wire [mm²] (Note 1)	
	L1/L2/L3/N-/⏚	L11/L21
MR-J4-10TM	2 (AWG 14)	1.25 to 2 (AWG 16 to 14)
MR-J4-20TM		
MR-J4-40TM		
MR-J4-60TM		
MR-J4-70TM		
MR-J4-100TM		
MR-J4-200TM MR-J4-350TM	3.5 (AWG 12)	
MR-J4-500TM (Note 2)	5.5 (AWG 10): a	1.25 (AWG 16): a 2 (AWG 14): d
MR-J4-700TM (Note 2)	8 (AWG 8): b	
MR-J4-11KTM (Note 2)	14 (AWG 6): e	1.25 (AWG 16): c 2 (AWG 14): c
MR-J4-15KTM (Note 2)	22 (AWG 4): f	
MR-J4-22KTM (Note 2)	38 (AWG 2): g	

Note 1. Alphabets in the table indicate crimping tools. For crimp terminals and applicable tools, refer to (2) in this section.
2. To connect these models to a terminal block, be sure to use the screws that come with the terminal block.

(2) Selection example of crimp terminals

Symbol	Servo amplifier-side crimp terminal				
	(Note 2) Crimp terminal	Applicable tool			Manufacturer
		Body	Head	Dice	
a	FVD5.5-4	YNT-1210S			JST
b (Note 1)	8-4NS	YHT-8S			
c	FVD2-4	YNT-1614			
d	FVD2-M3				
e	FVD14-6	YF-1	YNE-38	DH-122 DH-112	
f	FVD22-6	YF-1	YNE-38	DH-123 DH-113	
g	FVD38-8	YF-1	YNE-38	DH-124 DH-114	

Note 1. Coat the crimping part with an insulation tube.
2. Some crimp terminals may not be mounted depending on their sizes. Make sure to use the recommended ones or equivalent ones.

App. 1.4 Molded-case circuit breakers, fuses, magnetic contactors

(1) For main circuit power supply

⚠CAUTION	●To prevent the servo amplifier from smoke and a fire, select a molded-case circuit breaker which shuts off with high speed. ●Always use one molded-case circuit breaker and one magnetic contactor with one servo amplifier.

When using a fuse instead of the molded-case circuit breaker, use the one having the specifications given in this section.

Servo amplifier	Molded-case circuit breaker (Note 1)			Fuse			Magnetic contactor (Note 2)
	Frame, rated current		Voltage AC [V]	Class	Current [A]	Voltage DC [V]	
	Power factor improving reactor is not used	Power factor improving reactor is used					
MR-J4-10TM	30 A frame 5 A	30 A frame 5 A	240	T	10	400	DUD-N30
MR-J4-20TM	30 A frame 5 A	30 A frame 5 A					
MR-J4-40TM	30 A frame 10 A	30 A frame 5 A			15		
MR-J4-60TM	30 A frame 15 A	30 A frame 10 A			20		
MR-J4-70TM	30 A frame 15 A	30 A frame 10 A					
MR-J4-100TM (3-phase power supply input)	30 A frame 15 A	30 A frame 10 A					
MR-J4-100TM (1-phase power supply input)	30 A frame 15 A	30 A frame 15 A					
MR-J4-200TM	30 A frame 20 A	30 A frame 20 A			30		
MR-J4-350TM	30 A frame 30 A	30 A frame 30 A			40		
MR-J4-500TM	50 A frame 50 A	50 A frame 50 A			60		DUD-N60
MR-J4-700TM	100 A frame 75 A	60 A frame 60 A			80		
MR-J4-11KTM	100 A frame 100 A	100 A frame 100 A			125		DUD-N120
MR-J4-15KTM	125 A frame 125 A	125 A frame 125 A			175		
MR-J4-22KTM	225 A frame 175 A	225 A frame 175 A			300		DUD-N180

Note 1. Use a molded-case circuit breaker which has the same or higher operation characteristics than our lineup.
2. Use a magnetic contactor with an operation delay time (interval between current being applied to the coil until closure of contacts) of 80 ms or less.

(2) For control circuit power supply
When the wiring for the control circuit power supply (L11/L21) is thinner than that for the main circuit power supply (L1/L2/L3/N-), install an overcurrent protection device (fuse, etc.) to protect the branch circuit.

Servo amplifier	Fuse (Class T)		Fuse (Class K5)	
	Current [A]	Voltage DC [V]	Current [A]	Voltage DC [V]
MR-J4-10TM	1	400	1	400
MR-J4-20TM				
MR-J4-40TM				
MR-J4-60TM				
MR-J4-70TM				
MR-J4-100TM				
MR-J4-200TM				
MR-J4-350TM				
MR-J4-500TM				
MR-J4-700TM				
MR-J4-11KTM				
MR-J4-15KTM				
MR-J4-22KTM				

App. 2 Handling of AC servo amplifier batteries for the United Nations Recommendations on the Transport of Dangerous Goods

United Nations Recommendations on the Transport of Dangerous Goods Rev. 15 (hereinafter Recommendations of the United Nations) has been issued. To reflect this, transport regulations for lithium metal batteries are partially revised in the Technical Instruction (ICAO-TI) by the International Civil Aviation Organization (ICAO) and the International Maritime Dangerous Goods Code (IMDG Code) by the International Maritime Organization (IMO).
To comply the instruction and code, we have modified the indication on the package for general-purpose AC servo batteries.
The above change will not affect the function and performance of the product.

(1) Target model
(a) Battery (cell)

Model	Option model	Type	Lithium content	Mass of battery	Remark
ER6	MR-J3BAT	Cell	0.65 g	16 g	Cells with more than 0.3 grams of lithium content must be handled as dangerous goods (Class 9) depending on packaging requirements.
ER17330	MR-BAT	Cell	0.48 g	13 g	
	A6BAT	Cell	0.48 g	13 g	

(b) Battery unit (assembled battery)

Model	Option model	Type	Lithium content	Mass of battery	Remark
ER6	MR-J2M-BT	Assembled battery (Seven)	4.55 g	112 g	Assembled batteries with more than two grams of lithium content must be handled as dangerous goods (Class 9) regardless of packaging requirements.
CR17335A	MR-BAT6V1	Assembled battery (Two)	1.20 g	34 g	Assembled batteries with more than 0.3 grams of lithium content must be handled as dangerous goods (Class 9) depending on packaging requirements.
	MR-BAT6V1SET(-A)	Assembled battery (Two)	1.20 g	34 g	
	MR-BAT6V1BJ	Assembled battery (Two)	1.20 g	34 g	

(2) Purpose

Safer transportation of lithium metal batteries.

(3) Change in regulations

The following points are changed for lithium metal batteries in transportation by sea or air based on the revision of Recommendations of the United Nations Rev. 15 and ICAO-TI 2009-2010 edition, and IATA Dangerous Goods Regulations 54th Edition (effective January 1, 2013). For lithium metal batteries, cells are classified as UN3090, and batteries contained in or packed with equipment are classified as UN3091.

(a) Transportation of lithium metal batteries alone

Packaging requirement	Classification	Main requirement
Less than eight cells per package with less than one gram of lithium content	UN3090 PI968 Section II	The package must pass a 1.2 m drop test, and the handling label with battery illustration (size: 120 × 110 mm) must be attached on the package.
Less than two assembled batteries per package with less than two grams of lithium content		
More than eight cells per package with less than one gram of lithium content	UN3090 PI968 Section IB	The package must pass a 1.2 m drop test, and the handling label with battery illustration (size: 120 × 110 mm) must be attached on the package. The Class 9 hazard label must be attached or others to comply with dangerous goods (Class 9).
More than two assembled batteries per package with less than two grams of lithium content		
Cells with more than one gram of lithium content	UN3090 PI968 Section IA	The package must be compliant with Class 9 Packages, and the Class 9 hazard label must be attached or others to comply with dangerous goods (Class 9).
Assembled batteries with more than two grams of lithium content		

(b) Transportation of lithium metal batteries packed with or contained in equipment

1) For batteries packed with equipment, follow the necessary requirements of UN3091 PI969. Batteries are classified into either Section II/Section I depending on the lithium content/packaging requirements.

2) For batteries contained in equipment, follow the necessary requirements of UN3091 PI970. Batteries are classified into either Section II/Section I depending on the lithium content/packaging requirements.
The special handling may be unnecessary depending on the number of batteries and gross mass per package.

Fig. app. 1 Example of Mitsubishi label with battery illustration

(Available until December 31, 2018)

* Place for UN number (s)
** Place for telephone number for additional information

Fig. app. 2 Example of Mitsubishi label with battery illustration

(Available from January 1, 2017)

The handling label shown in Fig. app. 1 has been changed to the one shown in Fig. app. 2 in accordance with the IATA Dangerous Goods Regulations 58th Edition (effective January 1, 2017). However, the label shown in Fig. app. 1 may be used until December 31, 2018 (for two years as an interim measure).

(4) Details of the package change
The following caution is added to the packages of the target batteries.
"Containing lithium metal battery. Regulations apply for transportation."

(5) Transportation precaution for customers
For sea or air transportation, attaching the handling label (figure) must be attached to the package of a Mitsubishi Electric cell or battery. In addition, attaching it to the outer package containing several packages of Mitsubishi Electric cells or batteries is also required. When the content of a package must be handled as dangerous goods (Class 9), the Shipper's Declaration for Dangerous Goods is required, and the package must be compliant with Class 9 Packages. Documentations like the handling label in the specified design and the Shipper's Declaration for Dangerous Goods are required for transportation. Please attach the documentations to the packages and the outer package.

The IATA Dangerous Goods Regulations are revised, and the requirements are changed annually. When customers transport lithium batteries by themselves, the responsibility for the cargo lies with the customers. Thus, be sure to check the latest version of the IATA Dangerous Goods Regulations.

App. 3 Symbol for the new EU Battery Directive

Symbol for the new EU Battery Directive (2006/66/EC) that is plastered to general-purpose AC servo battery is explained here.

Note. This symbol mark is for EU countries only.

This symbol mark is according to the directive 2006/66/EC Article 20 Information for end-users and Annex II.
Your MITSUBISHI ELECTRIC product is designed and manufactured with high quality materials and components which can be recycled and/or reused.
This symbol means that batteries and accumulators, at their end-of-life, should be disposed of separately from your household waste.
If a chemical symbol is printed beneath the symbol shown above, this chemical symbol means that the battery or accumulator contains a heavy metal at a certain concentration.
This will be indicated as follows.
Hg: mercury (0.0005%), Cd: cadmium (0.002%), Pb: lead (0.004%)
In the European Union there are separate collection systems for used batteries and accumulators. Please, dispose of batteries and accumulators correctly at your local community waste collection/recycling center.
Please, help us to conserve the environment we live in!

App. 4 Compliance with global standards

App. 4.1 Terms related to safety (IEC 61800-5-2 Stop function)

STO function (Refer to IEC 61800-5-2: 2007 4.2.2.2 STO.)
MR-J4 servo amplifiers have the STO function. The STO function shuts down energy to servo motors, thus removing torque. This function electronically cuts off power supply in the servo amplifier.

App. 4.2 About safety

This section explains safety of users and machine operators. Please read the section carefully before mounting the equipment.

App. 4.2.1 Professional engineer

Only professional engineers should mount MR-J4 servo amplifiers.
Here, professional engineers should meet all the conditions below.

(1) Persons who took a proper training of related work of electrical equipment or persons who can avoid risk based on past experience.

(2) Persons who have read and familiarized himself/herself with this installation guide and operating manuals for the protective devices (e.g. light curtain) connected to the safety control system.

App. 4.2.2 Applications of the devices

MR-J4 servo amplifiers comply with the following standards.
ISO/EN ISO 13849-1 Category 3 PL e, IEC/EN 62061 SIL CL 3, IEC/EN 61800-5-2 (STO)
IEC/EN 61800-5-1, IEC/EN 61800-3, IEC/EN 60204-1
MR-J4 servo amplifiers can be used with the MR-D30 functional safety unit, MR-J3-D05 safety logic unit, or safety PLCs.

App. 4.2.3 Correct use

Use the MR-J4 servo amplifiers within specifications. Refer to section 1.3 for specifications such as voltage, temperature, etc. Mitsubishi Electric Co. accepts no claims for liability if the equipment is used in any other way or if modifications are made to the device, even in the context of mounting and installation.

⚠WARNING	●If you need to get close to the moving parts of the machine for inspection or others, ensure safety by confirming the power off, etc. Otherwise, it may cause an accident. ●It takes 15 minutes maximum for capacitor discharging. Do not touch the unit and terminals immediately after power off.

(1) Peripheral device and power wiring

The followings are selected based on IEC/EN 61800-5-1, UL 508C, and CSA C22.2 No. 14.

(a) Power Wiring (local wiring and crimping tool)

The following table shows the stranded wire sizes [AWG] and the crimp terminal symbols rated at 75 °C/60 °C.

Table app. 2 Recommended wires

Servo amplifier (Note 4)	75 °C/60 °C stranded wire [AWG] (Note 2)			
	L1/L2/L3 ⏚	L11/L21	P+/C	U/V/W/⏚ (Note 3)
MR-J4-10TM(1)/MR-J4-20TM(1)/MR-J4-40TM(1)/ MR-J4-60TM(4)/MR-J4-70TM/MR-J4-100TM(4)/ MR-J4-200TM(4) (T)/MR-J4-350TM4	14/14	14/14	14/14	14/14
MR-J4-200TM (S)	12/12			
MR-J4-350TM				12/12
MR-J4-500TM (Note 1)	10: a/10: a	14: c/14: c	14: c/14: c	10: b/10: b
MR-J4-700TM (Note 1)	8: b/8: b		12: a/12: a	8: b/8: b
MR-J4-11KTM (Note 1)	6: d/4: f		12: e/12: e	4: f/4: f
MR-J4-15KTM (Note 1)	4: f/3: f		10: e/10: e	3: g/2: g
MR-J4-22KTM (Note 1)	1: h/-: -		10: i/10: i	1: j/-: -
MR-J4-500TM4 (Note 1)	14: c/14: c		14: c/14: c	12: a/10: a
MR-J4-700TM4 (Note 1)	12: a/12: a			10: a/10: a
MR-J4-11KTM4 (Note 1)	10: e/10: e		14: k/14: k	8: l/8: l
MR-J4-15KTM4 (Note 1)	8: l/8: l		12: e/12: e	6: d/4: d
MR-J4-22KTM4 (Note 1)	6: m/4: m		12: i/12: i	6: n/4: n

Note 1. To connect these models to a terminal block, be sure to use the screws that come with the terminal block.
2. Alphabets in the table indicate crimping tools. Refer to table app. 3 for the crimp terminals and crimping tools.
3. Select wire sizes depending on the rated output of the servo motors. The values in the table are sizes based on rated output of the servo amplifiers.
4. "(S)" means 1-phase 200 V AC power input and "(T)" means 3-phase 200 V AC power input in the table.

Table app. 3 Recommended crimp terminals

Symbol	Servo amplifier-side crimp terminals		
	Crimp terminal (Note 2)	Applicable tool	Manufacturer
a	FVD5.5-4	YNT-1210S	JST (J.S.T. Mfg. Co., Ltd.)
b (Note 1)	8-4NS	YHT-8S	
c	FVD2-4	YNT-1614	
d	FVD14-6	YF-1	
e	FVD5.5-6	YNT-1210S	
f	FVD22-6	YF-1	
g	FVD38-6	YF-1	
h	R60-8	YF-1	
i	FVD5.5-8	YNT-1210S	
j	CB70-S8	YF-1	
k	FVD2-6	YNT-1614	
l	FVD8-6	YF-1	
m	FVD14-8	YF-1	
n	FVD22-8	YF-1	

Note 1. Coat the crimping part with an insulation tube.
2. Some crimp terminals may not be mounted depending on the size. Make sure to use the recommended ones or equivalent ones.

(b) Selection example of MCCB and fuse

Use T class fuses or molded-case circuit breaker (UL 489 Listed MCCB) as the following table. The T class fuses and molded-case circuit breakers in the table are selected examples based on rated I/O of the servo amplifiers. When you select a smaller capacity servo motor to connect it to the servo amplifier, you can also use smaller capacity T class fuses or molded-case circuit breaker than ones in the table. For selecting ones other than Class T fuses and molded-case circuit breakers below and selecting a type E combination motor controller (motor circuit breaker), refer to section 11.10.

Servo amplifier (100 V class)	Molded-case circuit breaker (120 V AC)	Fuse (300 V)
MR-J4-10TM1/MR-J4-20TM1/MR-J4-40TM1	NV50-SVFU-15A (50 A frame 15 A)	20 A

Servo amplifier (200 V class) (Note)	Molded-case circuit breaker (240 V AC)	Fuse (300 V)
MR-J4-10TM/MR-J4-20TM/MR-J4-40TM/MR-J4-60TM (T)/ MR-J4-70TM (T)	NF50-SVFU-5A (50 A frame 5 A)	10 A
MR-J4-60TM (S)/MR-J4-70TM (S)/MR-J4-100TM (T)	NF50-SVFU-10A (50 A frame 10 A)	15 A
MR-J4-100TM (S)/MR-J4-200TM (T)	NF50-SVFU-15A (50 A frame 15 A)	30 A
MR-J4-200TM (S)/MR-J4-350TM	NF50-SVFU-20A (50 A frame 20 A)	40 A
MR-J4-500TM	NF50-SVFU-30A (50 A frame 30 A)	60 A
MR-J4-700TM	NF50-SVFU-40A (50 A frame 40 A)	80 A
MR-J4-11KTM	NF100-CVFU-60A (100 A frame 60 A)	125 A
MR-J4-15KTM	NF100-CVFU-80A (100 A frame 80 A)	150 A
MR-J4-22KTM	NF225-CWU-125A (225 A frame 125 A)	300 A

Note. "(S)" means 1-phase 200 V AC power input and "(T)" means 3-phase 200 V AC power input in the table.

Servo amplifier (400 V class)	Molded-case circuit breaker (480 V AC)	Fuse (600 V)
MR-J4-60TM4/MR-J4-100TM4	NF100-HRU-5A (100 A frame 5 A)	10 A
MR-J4-200TM4	NF100-HRU-10A (100 A frame 10 A)	15 A
MR-J4-350TM4	NF100-HRU-10A (100 A frame 10 A)	20 A
MR-J4-500TM4	NF100-HRU-15A (100 A frame 15 A)	30 A
MR-J4-700TM4	NF100-HRU-20A (100 A frame 20 A)	40 A
MR-J4-11KTM4	NF100-HRU-30A (100 A frame 30 A)	60 A
MR-J4-15KTM4	NF100-HRU-40A (100 A frame 40 A)	80 A
MR-J4-22KTM4	NF100-HRU-60A (100 A frame 60 A)	125 A

(c) Power supply

This servo amplifier can be supplied from star-connected supply with grounded neutral point of overvoltage category III (overvoltage category II for the 1-phase servo amplifier) set forth in IEC/EN 60664-1.

For the interface power supply, use an external 24 V DC power supply with reinforced insulation on I/O terminals.

(d) Grounding

To prevent an electric shock, always connect the protective earth (PE) terminal (marked ⏚) of the servo amplifier to the protective earth (PE) of the cabinet. Do not connect two grounding cables to the same protective earth (PE) terminal. Always connect cables to the terminals one-to-one.
This product can cause a d.c. current in the protective earthing conductor. Where a residual current-operated protective (RCD: earth-leakage current breaker) device is used for protection in case of direct or indirect contact, only an RCD of Type B is allowed on the supply side of this product.
The MR-J4-700TM4 is high protective earthing conductor current equipment, the minimum size of the protective earthing conductor must comply with the local safety regulations.

(2) EU compliance

The MR-J4 servo amplifiers are designed to comply with the following directions to meet requirements for mounting, using, and periodic technical inspections: Machinery directive (2006/42/EC), EMC directive (2014/30/EU), Low-voltage directive (2014/35/EU), and RoHS directive (2011/65/EU).

(a) EMC requirement

MR-J4 servo amplifiers comply with category C3 in accordance with EN 61800-3. As for I/O wires (max. length 10 m. However, 3 m for STO cable for CN8.) and encoder cables (max. length 50 m), use shielded wires and ground the shields. Install an EMC filter and surge protector on the primary side for input and output of 200 V class and for output of 400 V class servo amplifiers. In addition, use a line noise filter for outputs of the 11 kW and 15 kW of 400 V class servo amplifiers. The following shows recommended products.

EMC filter: Soshin Electric HF3000A-UN series, TF3000C-TX series
COSEL FTB series

Surge protector: Okaya Electric Industries RSPD series

Line noise filter: Mitsubishi Electric FR-BLF

MR-J4 Series are not intended to be used on a low-voltage public network which supplies domestic premises; radio frequency interference is expected if used on such a network. The installer shall provide a guide for Installation and use, including recommended mitigation devices. To avoid the risk of crosstalk to signal cables, the installation instructions shall either recommend that the power interface cable be segregated from signal cables.
Use the DC power supply installed with the amplifiers in the same cabinet. Do not connect the other electric devices to the DC power supply.

(b) For Declaration of Conformity (DoC)

Hereby, MITSUBISHI ELECTRIC EUROPE B.V. declares that the servo amplifiers are in compliance with the necessary requirements and standards (2006/42/EC, 2014/30/EU, 2014/35/EU, and 2011/65/EU). For the copy of Declaration of Conformity, contact your local sales office.

(3) USA/Canada compliance
This servo amplifier is designed in compliance with UL 508C and CSA C22.2 No. 14.

(a) Installation
The minimum cabinet size is 150% of each MR-J4 servo amplifier's volume. Also, design the cabinet so that the ambient temperature in the cabinet is 55 °C or less. The servo amplifier must be installed in the metal cabinet. Additionally, mount the servo amplifier on a cabinet that the protective earth based on the standard of IEC/EN 60204-1 is correctly connected. For environment, the units should be used in open type (UL 50) and overvoltage category shown in table in app. 4.8.1. The servo amplifier needs to be installed at or below pollution degree 2. For connection, use copper wires.

(b) Short-circuit current rating (SCCR)
Suitable For Use On A Circuit Capable Of Delivering Not More Than 100 kA rms Symmetrical Amperes, 500 Volts Maximum. For SCCR (25 kA or 50 kA) when using a type E combination motor controller (motor circuit breaker), refer to section 11.10.

(c) Overload protection characteristics
The MR-J4 servo amplifiers have solid-state servo motor overload protection. (It is set on the basis (full load current) of 120% rated current of the servo amplifier.)

(d) Over-temperature protection for motor
Motor Over temperature sensing is not provided by the drive.
Integral thermal protection(s) is necessary for motor and refer to app. 4.4 for the proper connection.

(e) Branch circuit protection
For installation in United States, branch circuit protection must be provided, in accordance with the National Electrical Code and any applicable local codes.
For installation in Canada, branch circuit protection must be provided, in accordance with the Canada Electrical Code and any applicable provincial codes.

(4) South Korea compliance
This product complies with the Radio Wave Law (KC mark). Please note the following to use the product.
이 기기는 업무용 (A급) 전자파적합기기로서 판매자 또는 사용자는 이 점을 주의하시기 바라며, 가정외의 지역에서 사용하는 것을 목적으로 합니다.
(The product is for business use (Class A) and meets the electromagnetic compatibility requirements. The seller and the user must note the above point, and use the product in a place except for home.)
In addition, use an EMC filter, surge protector, ferrite core, and line noise filter on the primary side for inputs. Use a ferrite core and line noise filter for outputs. Use a distance greater than 30 m between the product and third party sensitive radio communications for an MR-J4-22KTM(4).

App. 4.2.4 General cautions for safety protection and protective measures

Observe the following items to ensure proper use of the MELSERVO MR-J4 servo amplifiers.

(1) For safety components and installing systems, only qualified personnel and professional engineers should perform.

(2) When mounting, installing, and using the MELSERVO MR-J4 servo amplifier, always observe standards and directives applicable in the country.

(3) The item about noises of the test notices in the manuals should be observed.

App. 4.2.5 Residual risk

(1) Be sure that all safety related switches, relays, sensors, etc., meet the required safety standards.

(2) Perform all risk assessments and safety level certification to the machine or the system as a whole.

(3) If the upper and lower power module in the servo amplifier are shorted and damaged simultaneously, the servo motor may make a half revolution at a maximum.

(4) Only qualified personnel are authorized to install, start-up, repair or service the machines in which these components are installed. Only trained engineers should install and operate the equipment. (ISO 13849-1 Table F.1 No. 5)

(5) Separate the wiring for safety observation function from other signal wirings. (ISO 13849-1 Table F.1 No. 1)

(6) Protect the cables with appropriate ways (routing them in a cabinet, using a cable guard, etc.).

(7) Keep the required clearance/creepage distance depending on voltage you use.

App. 4.2.6 Disposal

Disposal of unusable or irreparable devices should always occur in accordance with the applicable country-specific waste disposal regulations. (Example: European Waste 16 02 14)

App. 4.2.7 Lithium battery transportation

To transport lithium batteries, take actions to comply with the instructions and regulations such as the United Nations (UN), the International Civil Aviation Organization (ICAO), and the International Maritime Organization (IMO).
The batteries (MR-BAT6V1SET-A, MR-BAT6V1, and MR-BAT6V1BJ) are assembled batteries from two batteries (lithium metal battery CR17335A) which are not subject to the dangerous goods (Class 9) of the UN Recommendations.

App. 4.3 Installation direction and clearances

⚠CAUTION	●The devices must be installed in the specified direction. Not doing so may cause a malfunction. ●Mount the servo amplifier on a cabinet which meets IP54 in the correct vertical direction to maintain pollution degree 2. ●The regenerative resistor supplied with 11 kW to 22 kW servo amplifiers does not have a protective cover. Touching the resistor (including wiring/screw hole area) may cause a burn injury and electric shock. Even if the power was shut-off, be careful until the bus voltage discharged and the temperature decreased because of the following reasons. ・It may cause a burn injury due to very high temperature without cooling. ・It may cause an electric shock due to charged capacitor of the servo amplifier.

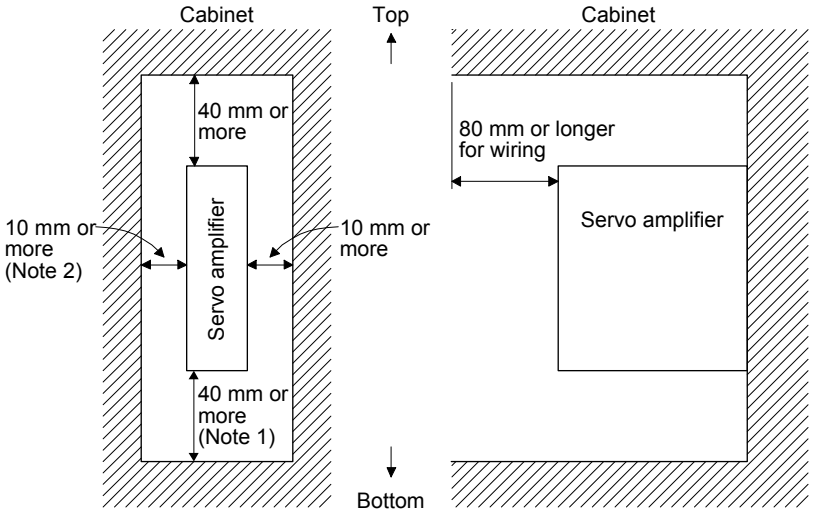

Note 1. For 11 kW to 22 kW servo amplifiers, the clearance between the bottom and ground will be 120 mm or more.
2. When mounting MR-J4-500TM, maintain a minimum clearance of 25 mm on the left side.

App. 4.4 Electrical Installation and configuration diagram

⚠WARNING	●Turn off the molded-case circuit breaker (MCCB) to avoid electrical shocks or damages to the product before starting the installation or wiring.

⚠CAUTION	●The installation complies with IEC/EN 60204-1. The voltage supply to machines must be 20 ms or more of tolerance against instantaneous power failure as specified in IEC/EN 60204-1. ●Connecting a servo motor for different axis to U, V, W, or CN2_ of the servo amplifier may cause a malfunction. ●Securely connect the cables in the specified method and tighten them with the specified torque. Otherwise, the servo motor may operate unexpectedly.

The following shows representative configuration examples to conform to the IEC/EN/UL/CSA standards.

(1) 3-phase input

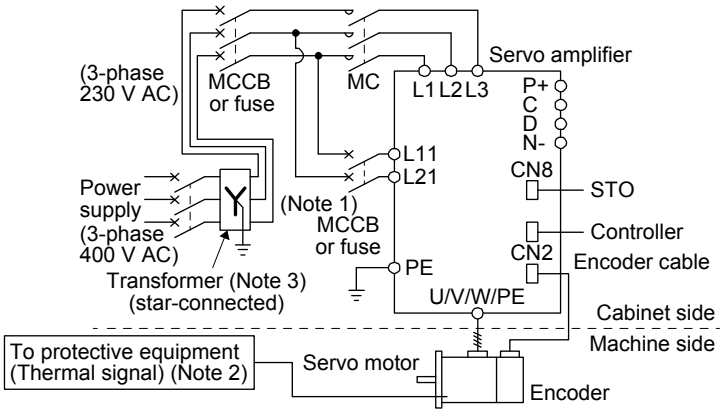

Note 1. When the wire sizes of L1 and L11 are the same, MCCB or fuse is not required.
2. Please use a thermal sensor, etc. for thermal protection of the servo motor.
3. For 400 V class, a step-down transformer is not required.

(2) 1-phase input

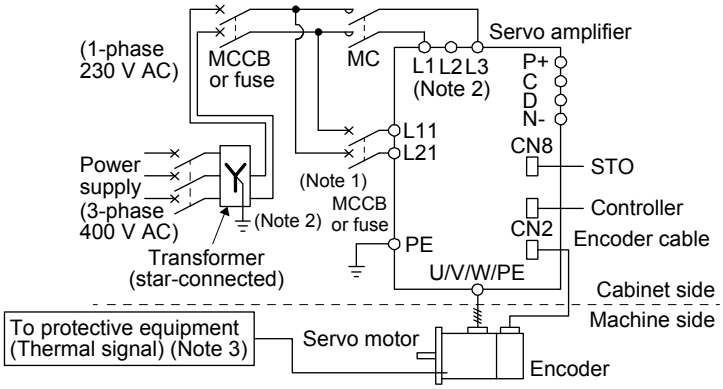

Note 1. When the wire sizes of L1 and L11 are the same, MCCB or fuse is not required.
2. When using a 100 V class servo amplifier, step down the power supply voltage to 100 V and connect the main circuit power supply lines to L1 and L2. For 1-phase 200 V AC servo amplifiers, connect the lines to L1 and L3.
3. Please use a thermal sensor, etc. for thermal protection of the servo motor.

The connectors described by rectangles are safely separated from the main circuits described by circles. The connected motors will be limited as follows.

(1) HG/HF/HC/HA series servo motors (Mfg.: Mitsubishi Electric)

(2) Using a servo motor complied with IEC 60034-1 and Mitsubishi Electric encoder (OBA, OSA)

App. 4.5 Signals

App. 4.5.1 Signal

The following shows MR-J4-10TM signals as a typical example.

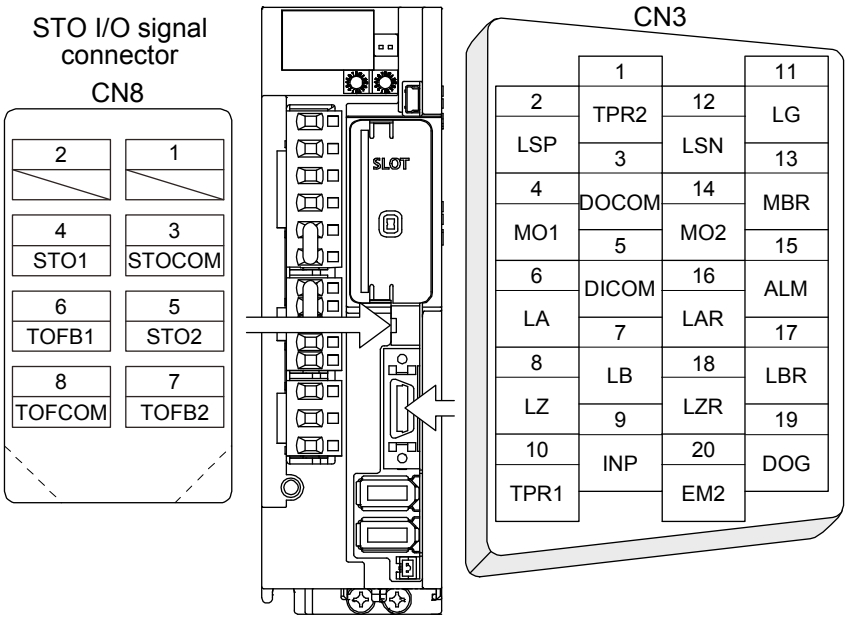

App. 4.5.2 I/O device

Input device

Symbol	Device	Connector	Pin No.
EM2	Forced stop 2	CN3	20
STOCOM	Common terminal for input signals STO1/STO2	CN8	3
STO1	STO1 state input		4
STO2	STO2 state input		5

Output device

Symbol	Device	Connector	Pin No.
TOFCOM	Common terminal for monitor output signal in STO state	CN8	8
TOFB1	Monitor output signal in STO1 state		6
TOFB2	Monitor output signal in STO2 state		7

Power supply

Symbol	Device	Connector	Pin No.
DICOM	Digital I/F power supply input	CN3	5
DOCOM	Digital I/F common		3
SD	Shield		Plate

App. 4.6 Maintenance and service

> ⚠WARNING ●To avoid an electric shock, only qualified personnel should attempt inspections. For repair and parts replacement, contact your local sales office.

App. 4.6.1 Inspection items

It is recommended that the following points periodically be checked.

(1) Check for loose terminal block screws. Retighten any loose screws.

Servo amplifier	Tightening torque [N•m]														
	L1	L2	L3	N-	P3	P4	P+	C	D	L11	L21	U	V	W	PE
MR-J4-10TM(1)/MR-J4-20TM(1)/ MR-J4-40TM(1)/MR-J4-60TM(4)/ MR-J4-70TM/MR-J4-100TM(4)/ MR-J4-200TM(4)/MR-J4-350TM(4)															1.2
MR-J4-500TM	1.2									0.8		1.2			
MR-J4-700TM(4)/MR-J4-500TM4	1.2									0.8		1.2			
MR-J4-11KTM(4)/MR-J4-15KTM(4)	3.0									1.2		3.0			
MR-J4-22KTM(4)	6.0									1.2		6.0			

(2) Servo motor bearings, brake section, etc. for unusual noise.

(3) Check the cables and the like for scratches or cracks. Perform periodic inspection according to operating conditions.

(4) Check that the connectors are securely connected to the servo motor.

(5) Check that the wires are not coming out from the connector.

(6) Check for dust accumulation on the servo amplifier.

(7) Check for unusual noise generated from the servo amplifier.

(8) Check the servo motor shaft and coupling for connection.

(9) Make sure that the emergency stop circuit operates properly such that an operation can be stopped immediately and a power is shut off by the emergency stop switch.

App. 4.6.2 Parts having service life

Service life of the following parts is listed below. However, the service life varies depending on operation and environment. If any fault is found in the parts, they must be replaced immediately regardless of their service life. For parts replacement, please contact your local sales office.

Part name	Life guideline
Smoothing capacitor	10 years (Note 3)
Relay	Number of power-on, forced stop, and sudden stop command from controller: 100,000 times Number of on and off for STO: 1,000,000 times
Cooling fan	10,000 hours to 30,000 hours (2 years to 3 years)
Battery backup time (Note 1)	Approximately 20,000 hours (equipment power supply: off, ambient temperature: 20 °C)
Battery life (Note 2)	5 years from date of manufacture

Note 1. The time is for using MR-J4 servo amplifier with a rotary servo motor using MR-BAT6V1SET-A and MR-BAT6V1BJ. For details and other battery backup time, refer to chapter 12.
2. Quality of the batteries degrades by the storage condition. The battery life is 5 years from the production date regardless of the connection status.
3. The characteristic of smoothing capacitor is deteriorated due to ripple currents, etc. The life of the capacitor greatly depends on ambient temperature and operating conditions. The capacitor will be the end of its life in 10 years of continuous operation in air-conditioned environment (surrounding air temperature of 40 °C or less for use at the maximum 1000 m above sea level, 30 °C or less for over 1000 m to 2000 m).

App. 4.7 Transportation and storage

⚠CAUTION

- Transport the products correctly according to their mass.
- Stacking in excess of the limited number of product packages is not allowed.
- Do not hold the front cover, cables, or connectors when carrying the servo amplifier. Otherwise, it may drop.
- For detailed information on transportation and handling of the battery, refer to app. 2 and app. 3.
- Install the product in a load-bearing place of servo amplifier and servo motor in accordance with the instruction manual.
- Do not put excessive load on the machine.

When you keep or use it, please fulfill the following environment.

Item		Environment
Ambient temperature	Operation [°C]	0 to 55 Class 3K3 (IEC/EN 60721-3-3)
	Transportation (Note) [°C]	-20 to 65 Class 2K4 (IEC/EN 60721-3-2)
	Storage (Note) [°C]	-20 to 65 Class 1K4 (IEC/EN 60721-3-1)
Ambient humidity	Operation, transportation, storage	5 %RH to 90 %RH
Vibration resistance	Test condition	10 Hz to 57 Hz with constant amplitude of 0.075 mm 57 Hz to 150 Hz with constant acceleration of 9.8 m/s^2 to IEC/EN 61800-5-1 (Test Fc of IEC 60068-2-6)
	Operation	5.9 m/s^2
	Transportation (Note)	Class 2M3 (IEC/EN 60721-3-2)
	Storage	Class 1M2 (IEC/EN 60721-3-2)
Pollution degree		2
IP rating		IP20 (IEC/EN 60529), Terminal block IP00
		Open type (UL 50)
Altitude	Operation, storage	Max. 2000 m above sea level
	Transportation	Max. 10000 m above sea level

Note. In regular transport packaging

App. 4.8 Technical data

App. 4.8.1 MR-J4 servo amplifier

Item		MR-J4-10TM/ MR-J4-20TM/ MR-J4-40TM/ MR-J4-60TM/ MR-J4-70TM/ MR-J4-100TM/ MR-J4-200TM	MR-J4-350TM/ MR-J4-500TM/ MR-J4-700TM/ MR-J4-11KTM/ MR-J4-15KTM/ MR-J4-22KTM	MR-J4-10TM1/ MR-J4-20TM1/ MR-J4-40TM1	MR-J4-60TM4/ MR-J4-100TM4/ MR-J4-200TM4/ MR-J4-350TM4/ MR-J4-500TM4/ MR-J4-700TM4/ MR-J4-11KTM4/ MR-J4-15KTM4/ MR-J4-22KTM4
Power supply	Main circuit (line voltage)	3-phase or 1-phase 200 V AC to 240 V AC, 50 Hz/60 Hz (Note)	3-phase 200 V AC to 240 V AC, 50 Hz/60 Hz (Note)	1-phase 100 V AC to 120 V AC, 50 Hz/60 Hz	3-phase 380 V AC to 480 V AC, 50 Hz/60 Hz
	Control circuit (line voltage)	1-phase 200 V AC to 240 V AC, 50/60 Hz		1-phase 100 V AC to 120 V AC, 50 Hz/60 Hz	1-phase 380 V AC to 480 V AC, 50 Hz/60 Hz
	Interface (SELV)	24 V DC (required current capacity: 300 mA)			
Control method		Sine-wave PWM control, current control method			
Safety observation function (STO) IEC/EN 61800-5-2		EN ISO 13849-1 Category 3 PL e, IEC 61508 SIL 3, EN 62061 SIL CL 3, and EN 61800-5-2			
Mean time to dangerous failure		MTTFd ≥ 100 [years] (314a)			
Effectiveness of fault monitoring of a system or subsystem		DC = Medium, 97.6 [%]			
Average probability of dangerous failures per hour		PFH = 6.4 × 10^{-9} [1/h]			
Mission time		TM = 20 [years]			
Response performance		8 ms or less (STO input off → energy shut off)			
Pollution degree		2 (IEC/EN 60664-1)			
Overvoltage category		1-phase 100 V AC/200 V AC: II (IEC/EN 60664-1), 3-phase 200 V AC/400 V AC: III (IEC/EN 60664-1)			
Protective class		I (IEC/EN 61800-5-1)			
Short-circuit current rating (SCCR)		100 kA			

Note. 283 V DC to 340 V DC can also be used.

App. 4.8.2 Dimensions/mounting hole process drawing

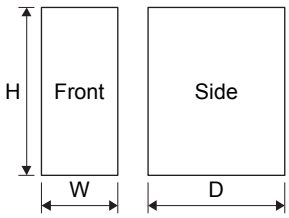

Servo amplifier	Variable dimension [mm]			Mass [kg] (servo amplifier only)
	W	H	D	
MR-J4-10TM(1)/MR-J4-20TM(1)/ MR-J4-40TM(1)/MR-J4-60TM	50	168	161	1.0
MR-J4-70TM/MR-J4-100TM	60	168	191	1.4
MR-J4-200TM(4)	90	168	201	2.1
MR-J4-350TM	90	168	201	2.3
MR-J4-500TM	105	250	206	4.0
MR-J4-700TM	172	300	206	6.2
MR-J4-11KTM(4)/MR-J4-15KTM(4)	220	400	266	13.4
MR-J4-22KTM(4)	260	400	266	18.2
MR-J4-60TM4/MR-J4-100TM4	60	168	201	1.7
MR-J4-350TM4	105	250	206	3.6
MR-J4-500TM4	130	250	206	4.3
MR-J4-700TM4	172	300	206	6.5

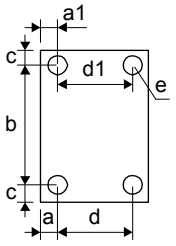

Servo amplifier	Variable dimensions [mm]						Screw size
	a	a1	b	c	D	d1	e
MR-J4-10TM(1)/MR-J4-20TM(1)/ MR-J4-40TM(1)/MR-J4-60TM	6	6	156 ± 0.5	6			M5
MR-J4-70TM/MR-J4-100TM	12	12	156 ± 0.5	6	42 ± 0.3		M5
MR-J4-200TM(4)/MR-J4-350TM	6	45	156 ± 0.5	6	78 ± 0.3		M5
MR-J4-500TM	6	6	235 ± 0.5	7.5	93 ± 0.5	93 ± 0.5	M5
MR-J4-700TM	6	6	285 ± 0.5	7.5	160 ± 0.5	160 ± 0.5	M5
MR-J4-11KTM(4)/MR-J4-15KTM(4)	12	12	380 ± 0.5	10	196 ± 0.5	196 ± 0.5	M5
MR-J4-22KTM(4)	12	12	376 ± 0.5	12	236 ± 0.5	236 ± 0.5	M10
MR-J4-60TM4/MR-J4-100TM4	12	12	156 ± 0.5	6	42 ± 0.3		M5
MR-J4-350TM4	6	6	235 ± 0.5	7.5	93 ± 0.5	93 ± 0.5	M5
MR-J4-500TM4	6	6	235 ± 0.5	7.5	118 ± 0.5	118 ± 0.5	M5
MR-J4-700TM4	6	6	285 ± 0.5	7.5	160 ± 0.5	160 ± 0.5	M5

App. 4.9 Check list for user documentation

MITSUBISHI ELECTRIC

MR-J4 installation checklist for manufacturer/installer

The following items must be satisfied by the initial test operation at least. The manufacturer/installer must be responsible for checking the standards in the items.
Maintain and keep this checklist with related documents of machines to use this for periodic inspection.

1. Is it based on directive/standard applied to the machine? Yes [ ], No [ ]
2. Is directive/standard contained in Declaration of Conformity (DoC)? Yes [ ], No [ ]
3. Does the protection instrument conform to the category required? Yes [ ], No [ ]
4. Are electric shock protective measures (protective class) effective? Yes [ ], No [ ]
5. Is the STO function checked (test of all the shut-off wiring)? Yes [ ], No [ ]

Checking the items will not be instead of the first test operation or periodic inspection by professional engineers.

App. 5 MR-J3-D05 Safety logic unit

App. 5.1 Contents of the package

Open packing, and confirm the content of packing.

Contents	Quantity
MR-J3-D05 Safety logic unit	1
Connector for CN9 1-1871940-4 (TE Connectivity)	1
Connector for CN10 1-1871940-8 (TE Connectivity)	1
MR-J3-D05 Safety Logic Unit Installation Guide	1

App. 5.2 Terms related to safety

App. 5.2.1 Stop function for IEC/EN 61800-5-2

(1) STO function (Refer to IEC/EN 61800-5-2: 2007 4.2.2.2 STO.)
This function is integrated into the MR-J4 series servo amplifiers.
The STO function shuts down energy to servo motors, thus removing torque. This function electronically cuts off power supply in servo amplifiers for MR-J4 series servo amplifiers.
The purpose of this function is as follows.

1) Uncontrolled stop according to stop category 0 of IEC/EN 60204-1

2) Preventing unexpected start-up

(2) SS1 function (Refer to IEC/EN 61800-5-2: 2007 4.2.2.3C Safe stop 1 temporal delay.)
SS1 is a function which initiates the STO function when the previously set delay time has passed after the servo motor starts decelerating. The delay time can be set with MR-J3-D05.
The purpose of this function is as follows. This function is available by using an MR-J4 series servo amplifier with MR-J3-D05.

・Controlled stop according to stop category 1 of IEC/EN 60204-1

App. 5.2.2 Emergency operation for IEC/EN 60204-1

(1) Emergency stop (Refer to IEC/EN 60204-1: 2005 9.2.5.4.2 Emergency Stop.)
Emergency stop must override all other functions and actuation in all operation modes. Power to the machine driving part which may cause a hazardous state must be either removed immediately (stop category 0) or must be controlled to stop such hazardous state as soon as possible (stop category 1).
Restart must not be allowed even after the cause of the emergency state has been removed.

(2) Emergency switching off (Refer to IEC/EN 60204-1: 2005 9.2.5.4.3 Emergency Switching OFF.)
Removal of input power to driving device to remove electrical risk and to meet above mentioned safety standards.

App. 5.3 Cautions

The following basic safety notes must be read carefully and fully in order to prevent injury to persons or damage to property.
Only qualified personnel are authorized to install, start-up, repair or service the machines in which these components are installed.
They must be familiar with all applicable local safety regulations and laws in which machines with these components are installed, particularly the standards and guidelines mentioned in this Instruction Manual and the requirements mentioned in ISO/EN ISO 13849-1, IEC 61508, IEC/EN 61800-5-2, and IEC/EN 60204-1.
The staff responsible for this work must be given express permission from the company to perform start-up, programming, configuration, and maintenance of the machine in accordance with the safety standards.

⚠WARNING	●Improper installation of the safety related components or systems may cause improper operation in which safety is not assured, and may result in severe injuries or even death.

Protective Measures

- As described in IEC/EN 61800-5-2, the Safe Torque Off (STO) function only prevents the servo amplifier from supplying energy to the servo motor. Therefore, if an external force acts upon the drive axis, additional safety measures, such as brakes or counter-weights must be used.

App. 5.4 Residual risk

Machine manufacturers are responsible for all risk evaluations and all associated residual risks. Below are residual risks associated with the STO/EMG function. Mitsubishi Electric is not liable for any damages or injuries caused by the residual risks.

(1) The SS1 function only guarantees the delay time before STO/EMG is engaged. Proper setting of this delay time is the full responsibility of the company and/or individuals responsible for installation and commissioning of the safety related system. The system, as a whole, must pass safety standards certification.

(2) When the SS1 delay time is shorter than the required servo motor deceleration time, if the forced stop function is malfunctioning, or if STO/EMG is engaged while the servo motor is still rotating; the servo motor will stop with the dynamic brake or freewheeling.

(3) For proper installation, wiring, and adjustment, thoroughly read the manual of each individual safety related component.

(4) Be sure that all safety related switches, relays, sensors, etc., meet the required safety standards.
The Mitsubishi Electric safety related components mentioned in this manual are certified by Certification Body as meeting the requirements of ISO/EN ISO 13849-1 Category 3, PL d and IEC 61508 SIL 2.

(5) Safety is not assured until safety-related components of the system are completely installed or adjusted.

(6) When replacing a servo amplifier etc. or MR-J3-D05, confirm that the new equipment is exactly the same as those being replaced. Once installed, be sure to verify the performance of the functions before commissioning the system.

(7) Perform all risk assessments and safety level certification to the machine or the system as a whole. It is recommended that a Certification Body final safety certification of the system be used.

(8) To prevent accumulation of multiple malfunctions, perform a malfunction check at regular intervals as deemed necessary by the applicable safety standard. Regardless of the system safety level, malfunction checks should be performed at least once per year.

(9) If the upper and lower power module in the servo amplifier are shorted and damaged simultaneously, the servo motor may make a half revolution at a maximum. For a linear servo motor, the primary side will move a distance of pole pitch.

App. 5.5 Block diagram and timing chart

(1) Function block diagram

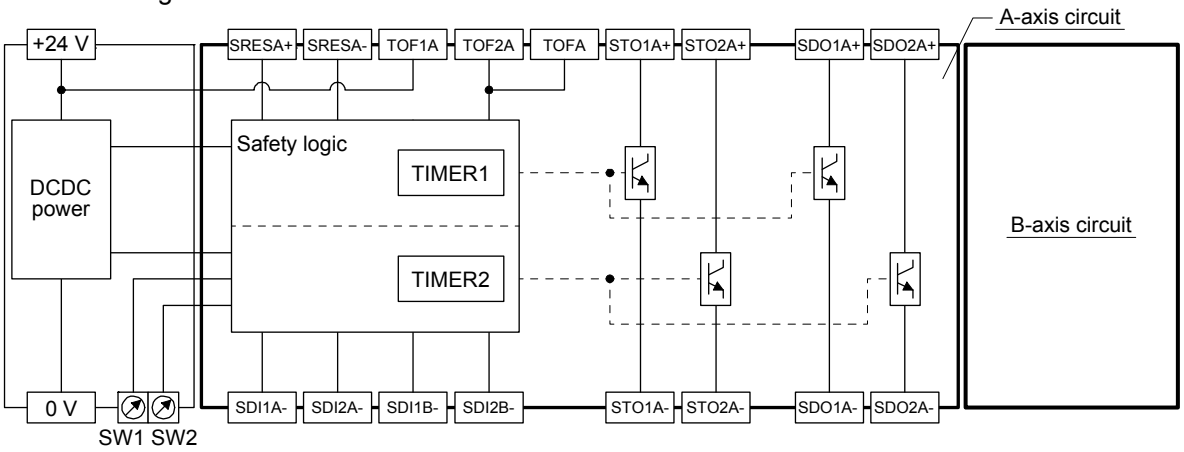

(2) Operation sequence

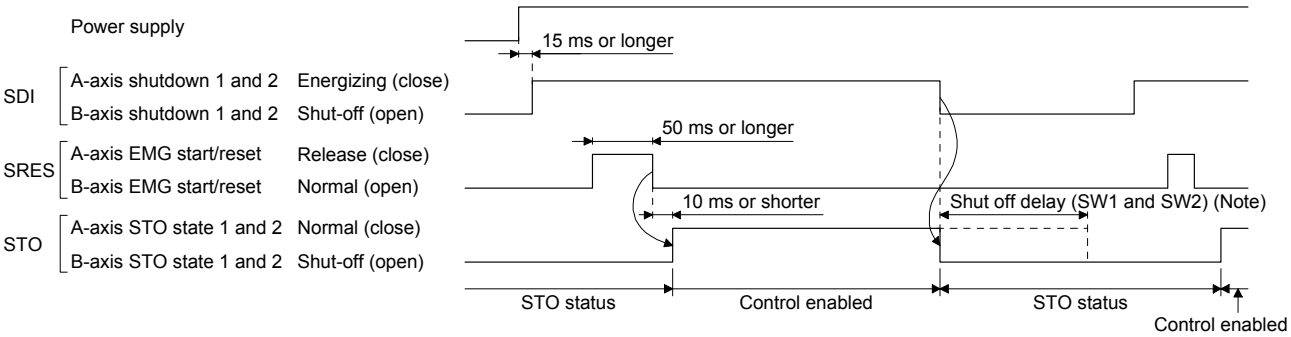

Note. Refer to App. 5.10.

App. 5.6 Maintenance and disposal

MR-J3-D05 is equipped with LED displays to check errors for maintenance.
Please dispose this unit according to your local laws and regulations.

App. 5.7 Functions and configuration

App. 5.7.1 Summary

MR-J3-D05 has two systems in which the each system has SS1 function (delay time) and output of STO function.

App. 5.7.2 Specifications

Safety logic unit model		MR-J3-D05
Control circuit power supply	Voltage	24 V DC
	Permissible voltage fluctuation	24 V DC ± 10%
	Power supply capacity [A]	0.5 (Note 1, 2)
Compatible system		2 systems (A-axis, B-axis independent)
Shut-off input		4 points (2 point × 2 systems) SDI_: (source/sink compatible) (Note 3)
Shut-off release input		2 points (1 point × 2 systems) SRES_: (source/sink compatible) (Note 3)
Feedback input		2 points (1 point × 2 systems) TOF_: (source compatible) (Note 3)
Input type		Photocoupler insulation, 24 V DC (external supply), internal limited resistance 5.4 kΩ
Shut-off output		8 points (4 point × 2 systems) STO_: (source compatible) (Note 3) SDO_: (source/sink compatible) (Note 3)
Output method		Photocoupler insulation, open-collector type Permissible current: 40 mA/1 output, Inrush current: 100 mA/1 output
Delay time setting		A-axis: Select from 0 s, 1.4 s, 2.8 s, 5.6 s, 9.8 s, or 30.8 s. B-axis: Select from 0 s, 1.4 s, 2.8 s, 9.8 s, or 30.8 s. Accuracy: ±2%
Functional safety		STO, SS1 (IEC/EN 61800-5-2) EMG STOP, EMG OFF IEC/EN 60204-1)
Safety performance	Standards certified by CB	EN ISO 13849-1 Category 3 PL d, IEC 61508 SIL 2, EN 62061 SIL CL 2, and EN 61800-5-2 SIL 2
	Response performance (when delay time is set to 0 s) (Note 4)	10 ms or less (STO input off → shut-off output off)
	Mean time to dangerous failure (MTTFd)	516 years
	Diagnosis converge (DC avg)	93.1%
	Average probability of dangerous failures per hour (PFH)	4.75×10^{-9} [1/h]
Compliance with global standards	CE marking	LVD: EN 61800-5-1 EMC: EN 61800-3 MD: EN ISO 13849-1, EN 61800-5-2, EN 62061
Structure		Natural-cooling, open (IP rating: IP 00)
Environment	Ambient temperature	0 °C to 55 °C (non-freezing), storage: -20 °C to 65 °C (non-freezing)
	Ambient humidity	5 %RH to 90 %RH (non-condensing), storage: 5 %RH to 90 %RH (non-condensing)
	Ambience	Indoors (no direct sunlight), free from corrosive gas, flammable gas, oil mist, dust, and dirt
	Altitude	Max. 1000 m above sea level
	Vibration resistance	5.9 m/s^2 at 10 Hz to 55 Hz (directions of X, Y and Z axes)
Mass [kg]		0.2 (including CN9 and CN10 connectors)

Note 1. Inrush current of approximately 1.5 A flows instantaneously when turning the control circuit power supply on. Select an appropriate capacity of power supply considering the inrush current.
2. Power-on duration of the safety logic unit is 100,000 times.
3. _: in signal name indicates a number or axis name.
4. For the test pulse input, contact your local sales office.

App. 5.7.3 When using MR-J3-D05 with an MR-J4 series servo amplifier

(1) System configuration diagram

The following shows the connection targets of the STO switch and STO release switch.

POINT
●MR-D05UDL_M (STO cable) for MR-J3 series cannot be used.

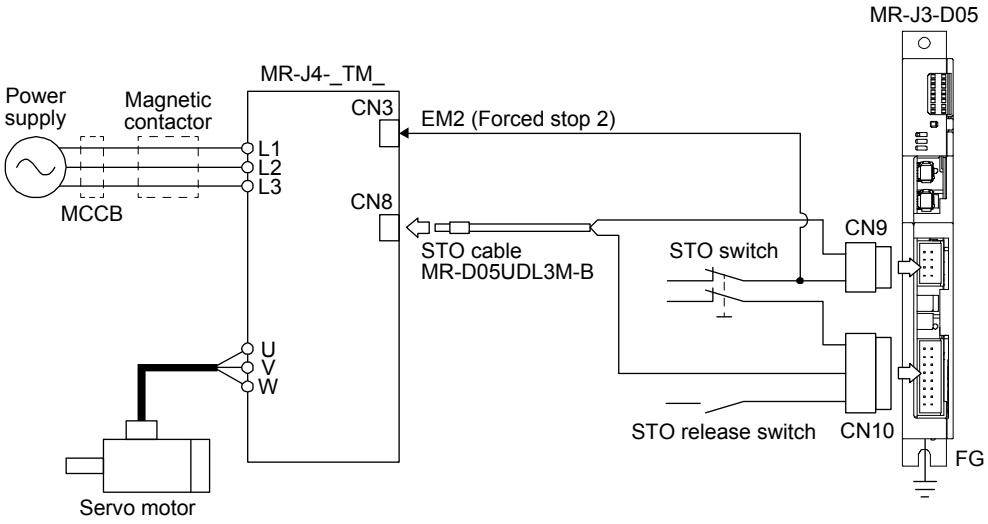

(2) Connection example

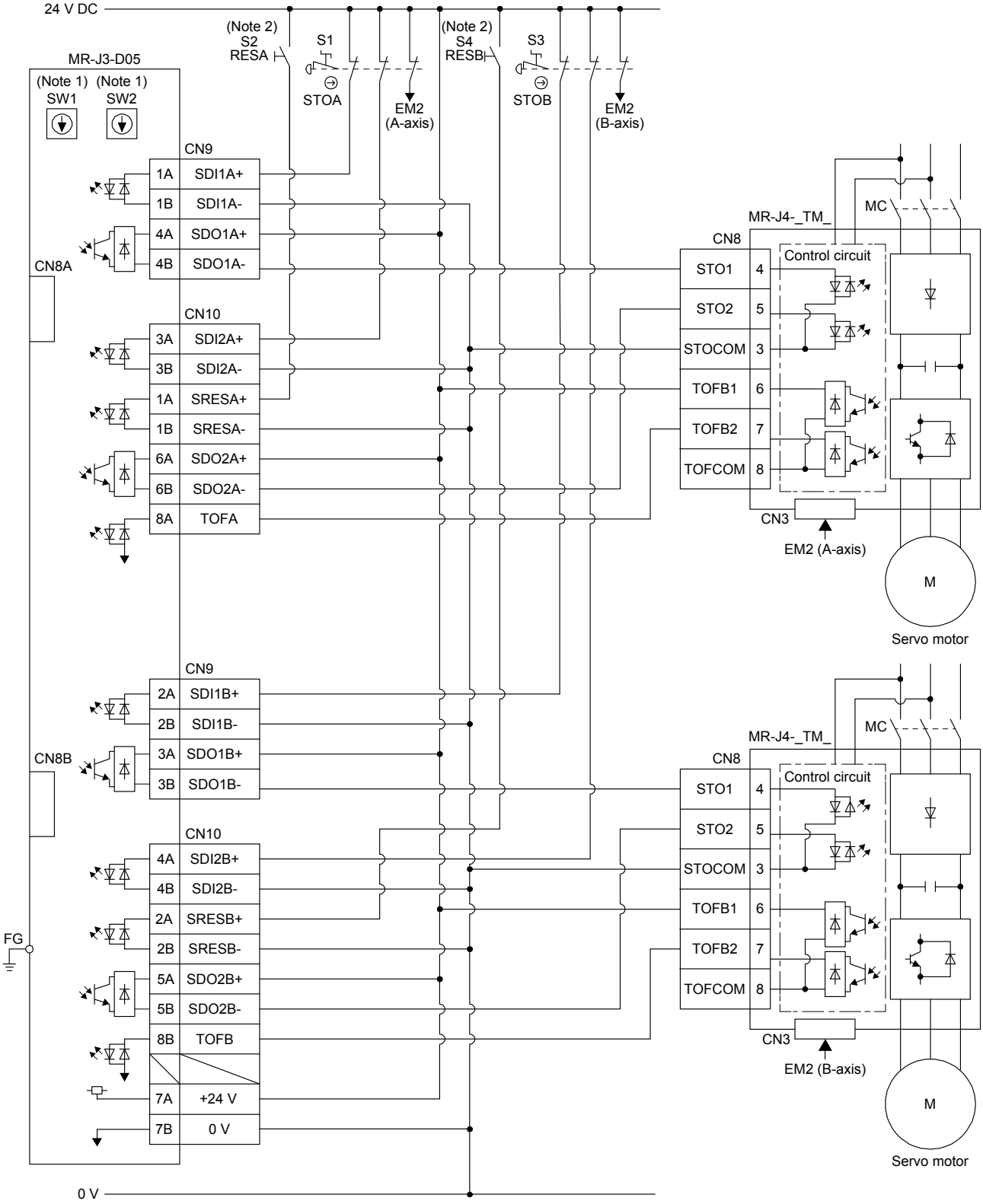

Note 1. Set the delay time of STO output with SW1 and SW2. These switches are located where dented from the front panel.
2. To release the STO state (base circuit shut-off), turn RESA and RESB on and turn them off.

App. 5.8 Signal

App. 5.8.1 Connector/pin assignment

(1) CN8A

Device	Symbol	Pin No.	Function/application	I/O division
A-axis STO1	STO1A- STO1A+	1 4	Outputs STO1 to A-axis driving device. Outputs the same signal as A-axis STO2. STO state (base shutdown): Between STO1A+ and STO1A- is opened. STO release state (in driving): Between STO1A+ and STO1A- is closed.	O
A-axis STO2	STO2A- STO2A+	5 6	Outputs STO2 to A-axis driving device. Outputs the same signal as A-axis STO1. STO state (base shutdown): Between STO2A+ and STO2A- is opened. STO release state (in driving): Between STO2A+ and STO2A- is closed.	O
A-axis STO state	TOF2A TOF1A	7 8	Inputs STO state of A-axis driving device. STO state (base shutdown): Open between TOF2A and TOF1A. STO release state (in driving): Close between TOF2A and TOF1A.	I

(2) CN8B

Device	Symbol	Pin No.	Function/application	I/O division
B-axis STO1	STO1B- STO1B+	1 4	Outputs STO1 to B-axis driving device. Outputs the same signal as B-axis STO2. STO state (base shutdown): Between STO1B+ and STO1B- is opened. STO release state (in driving): Between STO1B+ and STO1B- is closed.	O
B-axis STO2	STO2B- STO2B+	5 6	Outputs STO2 to B-axis driving device. Outputs the same signal as B-axis STO1. STO state (base shutdown): Between STO2B+ and STO2B- is opened. STO release state (in driving): Between STO2B+ and STO2B- is closed.	O
B-axis STO state	TOF2B TOF1B	7 8	Inputs STO state of B-axis driving device. STO state (base shutdown): Open between TOF2B and TOF1B. STO release state (in driving): Close between TOF2B and TOF1B.	I

(3) CN9

Device	Symbol	Pin No.	Function/application	I/O division
A-axis shutdown 1	SDI1A+ SDI1A-	1A 1B	Connect this device to a safety switch for A-axis driving device. Input the same signal as A-axis shutdown 2. STO state (base shutdown): Open between SDI1A+ and SDI1A-. STO release state (in driving): Close between SDI1A+ and SDI1A-.	DI-1
B-axis shutdown 1	SDI1B+ SDI1B-	2A 2B	Connect this device to a safety switch for B-axis driving device. Input the same signal as B-axis shutdown 2. STO state (base shutdown): Open between SDI1B+ and SDI1B-. STO release state (in driving): Close between SDI1B+ and SDI1B-.	DI-1
A-axis SDO1	SDO1A+ SDO1A-	4A 4B	Outputs STO1 to A-axis driving device. Outputs the same signal as A-axis SDO2. STO state (base shutdown): Between SDO1A+ and SDO1A- is opened. STO release state (in driving): Between SDO1A+ and SDO1A- is closed.	DO-1
B-axis SDO1	SDO1B+ SDO1B-	3A 3B	Outputs STO1 to B-axis driving device. Outputs the same signal as B-axis SDO2. STO state (base shutdown): Between SDO1B+ and SDO1B- is opened. STO release state (in driving): Between SDO1B+ and SDO1B- is closed.	DO-1

(4) CN10

Device	Symbol	Pin No.	Function/application	I/O division
A-axis shutdown 2	SDI2A+ SDI2A-	3A 3B	Connect this device to a safety switch for A-axis driving device. Input the same signal as A-axis shutdown 1. STO state (base shutdown): Open between SDI2A+ and SDI2A-. STO release state (in driving): Close between SDI2A+ and SDI2A-.	DI-1
B-axis shutdown 2	SDI2B+ SDI2B-	4A 4B	Connect this device to a safety switch for B-axis driving device. Input the same signal as B-axis shutdown 1. STO state (base shutdown): Open between SDI2B+ and SDI2B-. STO release state (in driving): Close between SDI2B+ and SDI2B-.	DI-1
A-axis EMG start/reset	SRESA+ SRESA-	1A 1B	Signal for releasing STO state (base shutdown) on A-axis driving device. Releases STO state (base shutdown) on A-axis driving device by switching between SRESA+ and SRESA- from on (connected) to off (opened).	DI-1
B-axis EMG start/reset	SRESB+ SRESB-	2A 2B	Signal for releasing STO state (base shutdown) on B-axis driving device. Releases STO state (base shutdown) on B-axis driving device by switching between SRESB+ and SRESB- from on (connected) to off (opened).	DI-1
A-axis SDO2	SDO2A+ SDO2A-	6A 6B	Outputs STO2 to A-axis driving device. Outputs the same signal as A-axis STO1. STO state (base shutdown): Between SDO2A+ and SDO2A- is opened. STO release state (in driving): Between SDO2A+ and SDO2A- is closed.	DO-1
B-axis SDO2	SDO2B+ SDO2B-	5A 5B	Outputs STO2 to B-axis driving device. Outputs the same signal as B-axis SDO1. STO state (base shutdown): Between SDO2B+ and SDO2B- is opened. STO release state (in driving): Between SDO2B+ and SDO2B- is closed.	DO-1
Control circuit power supply	+24V	7A	Connect + side of 24 V DC.	
Control circuit power GND	0V	7B	Connect - side of 24 V DC.	
A-axis STO state	TOFA	8A	TOFA is internally connected with TOF2A.	
B-axis STO state	TOFB	8B	TOFB is internally connected with TOF2B.	

App. 5.8.2 Interfaces

In this servo amplifier, source type I/O interfaces can be used.

(1) Sink I/O interface (CN9, CN10 connector)

(a) Digital input interface DI-1

This is an input circuit whose photocoupler cathode side is input terminal. Transmit signals from sink (open-collector) type transistor output, relay switch, etc.

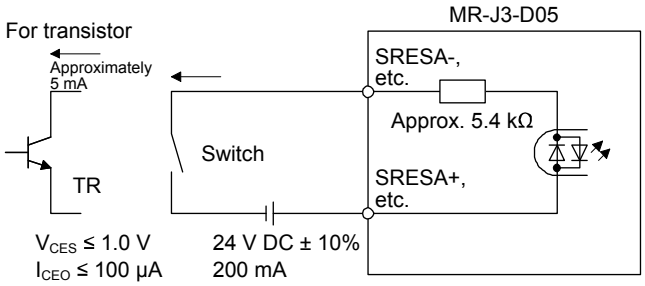

(b) Digital output interface DO-1

This is a circuit in which the collector of the output transistor is the output terminal. When the output transistor is turned on, the current will flow to the collector terminal. A lamp, relay or photocoupler can be driven. Install a diode (D) for an inductive load, or install an inrush current suppressing resistor (R) for a lamp load. (Rated current: 40 mA or less, maximum current: 50 mA or less, inrush current: 100 mA or less) A maximum of 2.6 V voltage drop occurs in the MR-J3-D05.

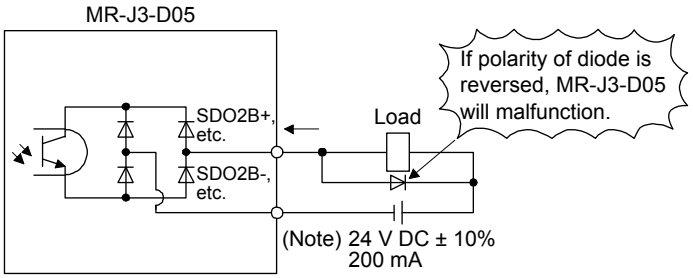

Note. If the voltage drop (maximum of 2.6 V) interferes with the relay operation, apply high voltage (maximum of 26.4 V) from external source.

(2) Source I/O interfaces (CN9, CN10 connector)

(a) Digital input interface DI-1

This is an input circuit whose photocoupler anode side is input terminal. Transmit signals from source (open-collector) type transistor output, relay switch, etc.

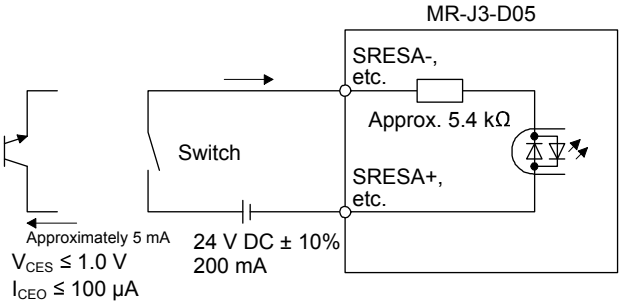

(b) Digital output interface DO-1

This is a circuit in which the emitter of the output transistor is the output terminal. When the output transistor is turned on, the current will flow from the output terminal to a load. A maximum of 2.6 V voltage drop occurs in the MR-J3-D05.

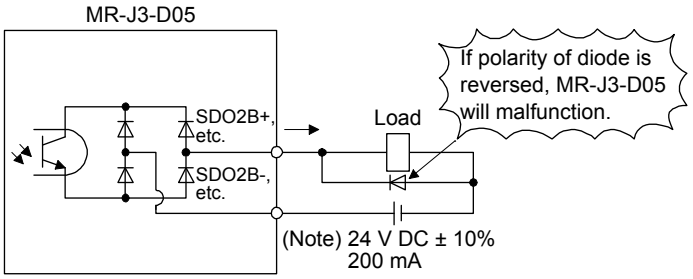

Note. If the voltage drop (maximum of 2.6 V) interferes with the relay operation, apply high voltage (maximum of 26.4 V) from external source.

App. 5.8.3 Wiring CN9 and CN10 connectors

Handle with the tool with care when connecting wires.

(1) Wire strip

(a) Use wires with size of AWG 24 to 20 (0.22 mm^2 to 0.5 mm^2) (recommended electric wire: UL1007) and strip the wires to make the stripped length 7.0 mm ± 0.3 mm. Confirm the stripped length with gauge, etc. before using the wires.

(b) If the stripped wires are bent, loose or too thick due to twisting too much, fix the wires by twisting lightly, etc. Then, confirm the stripped length before using the wires. Do not use excessively deformed wires.

(c) Smooth out the wire surface and stripped insulator surface.

(2) Connecting wires

Before connecting wires, be sure to pull out the receptacle assembly from the header connector. If wires are connected with inserted connector, the connector and the printed board may malfunction.

(a) Using extraction tool (1891348-1 or 2040798-1)

1) Dimensions and mass

[Unit: mm]

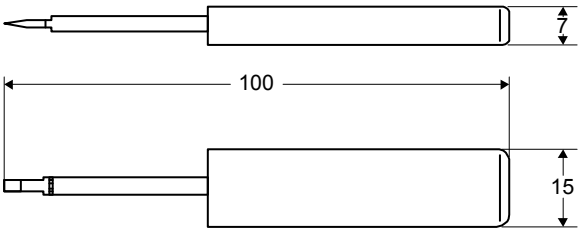

Mass: Approx. 20 g

2) Connecting wires

a) Confirm the model number of the housing, contact and tool to be used.

b) Insert the tool diagonally into the receptacle assembly.

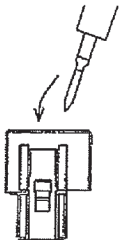

c) Insert the tool until it hits the surface of the receptacle assembly. At this stage, the tool is vertical to the receptacle assembly.

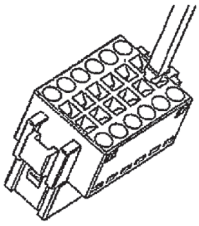

d) Insert wires in the wiring hole till the end. The wires should be slightly twisted in advance to prevent it from being loose.

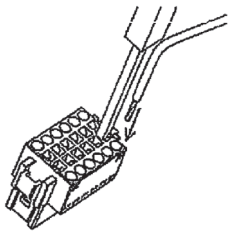

It is easy to insert the wire if the wire is inserted diagonally while twisting the tool.

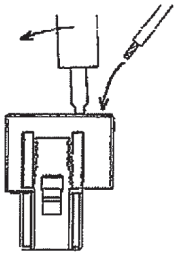

e) Remove the tool.

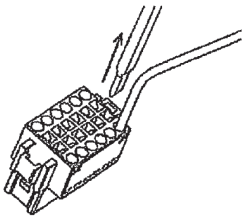

(b) Using a screwdriver

To avoid damaging housings and springs when wiring with screwdriver, do not put excessive force. Be cautious when connecting.

1) Adjusting screw driver

Diameter: 2.3 mm ± 0.05 mm
Length: 120 mm or less
Width: 2.3 mm
Thickness: 0.25 mm
Angle in tip of the blade: 18 ± 1 degrees

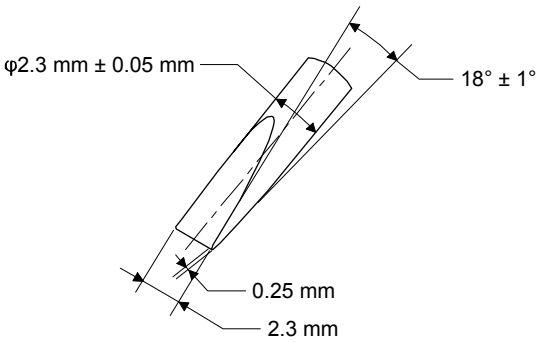

Screwdriver diameter: φ 2.3 mm

Diameter: 2.5 mm ± 0.05 mm
Length: 120 mm or less
Width: 2.5 mm
Thickness: 0.3 mm
Angle in tip of the blade: 12 ± 1 degrees

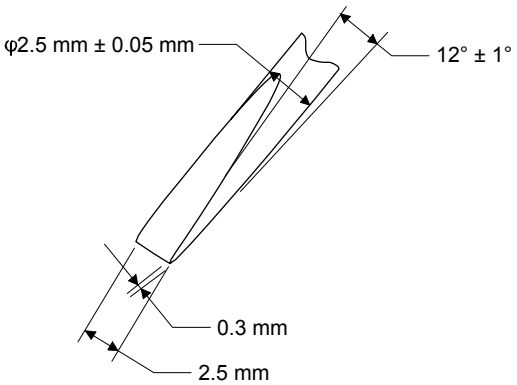

Screwdriver diameter: φ 2.5 mm

2) Connecting wires

a) Insert a screwdriver in the front slot a little diagonally, and depress the spring. While depressing the spring, insert the wires until they hit the end. Note that the housing and spring may be damaged if the screwdriver is inserted strongly. Never insert the screwdriver in the wire hole. Otherwise, the connector will be damaged.

b) Pull the screwdriver out while pressing the wires. Connecting wires is completed.

c) Pull the wire lightly to confirm that the wire is surely connected.

d) To remove the wires, depress the spring by the screwdriver in the same way as connecting wires, and then pull the wires out.

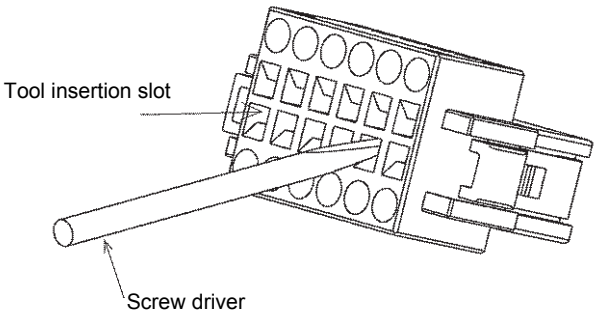

(3) Connector insertion

Insert the connector all the way straight until you hear or feel clicking. When removing the connector, depress the lock part completely before pulling out. If the connector is pulled out without depressing the lock part completely, the housing, contact and/or wires may be damaged.

(4) Compatible wire

Compatible wire size is listed below.

Wire size	
mm^2	AWG
0.22	24
0.34	22
0.50	20

(5) Others

(a) Fix a cable tie at least distance of "A" × 1.5 away from the end of the connector.

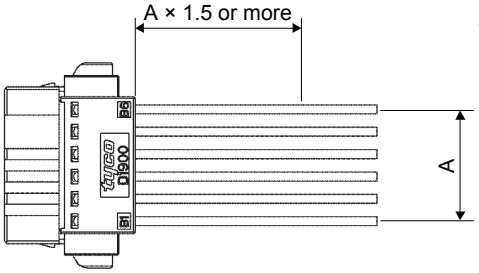

(b) Be sure that wires are not pulled excessively when the connector is inserted.

App. 5.8.4 Wiring FG

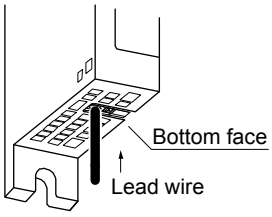

Wire range

Single wire: φ 0.4 mm to 1.2 mm (AWG 26 to AWG 16)

Stranded wire: 0.2 mm^2 to 1.25 mm^2 (AWG 24 to AWG 16), wire φ 0.18 mm or more

App. 5.9 LED display

I/O status, malfunction and power on/off are displayed with LED for each A-axis and B-axis.

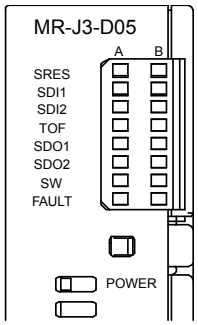

LED	Definition	LED	
		Column A	Column B
SRES	Monitor LED for start/reset Off: The start/reset is off. (The switch contact is opened.) On: The start/reset is on. (The switch contact is closed.)	A-axis	B-axis
SDI1	Monitor LED for shut-off 1 Off: The shut-off 1 is off. (The switch contact is closed.) On: The shut-off 1 is on. (The switch contact is opened.)		
SDI2	Monitor LED for shut-off 2 Off: The shut-off 2 is off. (The switch contact is closed.) On: The shut-off 2 is on. (The switch contact is opened.)		
TOF	Monitor LED for STO state Off: Not in STO state On: In STO state		
SDO1	Monitor LED for SDO1 Off: Not in STO state On: In STO state		
SDO2	Monitor LED for SDO2 Off: Not in STO state On: In STO state		
SW	Monitor LED for confirming shutdown delay setting Off: The settings of SW1 and SW2 do not match. On: The settings of SW1 and SW2 match.		
FAULT	FAULT LED Off: Normal operation (STO monitoring state) On: Fault has occurred.		
POWER	Power Off: Power is not supplied to MR-J3-D05. On: Power is being supplied to MR-J3-D05.		

App. 5.10 Rotary switch setting

Rotary switch is used to shut off the power after control stop by SS1 function.
Set the delay time from when the STO shut off switch is pressed until when STO output is performed. Set the same setting for SW1 and SW2. The following table shows the delay time to be set according to the setting value of the rotary switch.
Setting cannot be changed while power is on. Notify users that setting cannot be changed by putting a seal or by another method so that end users will not change the setting after the shipment.
0 to F in the following table is the set value of the rotary switches (SW1 and SW2).

Rotary switch setting and delay time at A-axis/B-axis [s]

		B-axis					
		0 s	1.4 s	2.8 s	5.6 s	9.8 s	30.8 s
A-axis	0 s	0	1	2	-	3	4
	1.4 s	-	-	5	-	6	7
	2.8 s	-	-	8	-	9	A
	5.6 s	-	-	-	-	B	C
	9.8 s	-	-	-	-	D	E
	30.8 s	-	-	-	-	-	F

App. 5.11 Troubleshooting

When power is not supplied or FAULT LED turns on, refer the following table and take the appropriate action.

Event	Definition	Cause	Action
Power is not supplied.	Power LED does not turn on although power is supplied.	1. 24 V DC power supply is malfunctioning.	Replace the 24 V DC power supply.
		2. Wires between MR-J3-D05 and 24 V DC power supply are disconnected or are in contact with other wires.	Check the wiring.
		3. MR-J3-D05 is malfunctioning.	Replace the MR-J3-D05.
FAULT LED is on.	FAULT LED of A-axis or B-axis is on, and will not turn off.	1. The delay time settings are not matched.	Check the settings of the rotary switch.
		2. Switch input error	Check the wiring or sequence of the input signals.
		3. TOF signal error	Check the connection with the servo amplifier.
		4. MR-J3-D05 is malfunctioning.	Replace the MR-J3-D05.

App. 5.12 Dimensions

[Unit: mm]

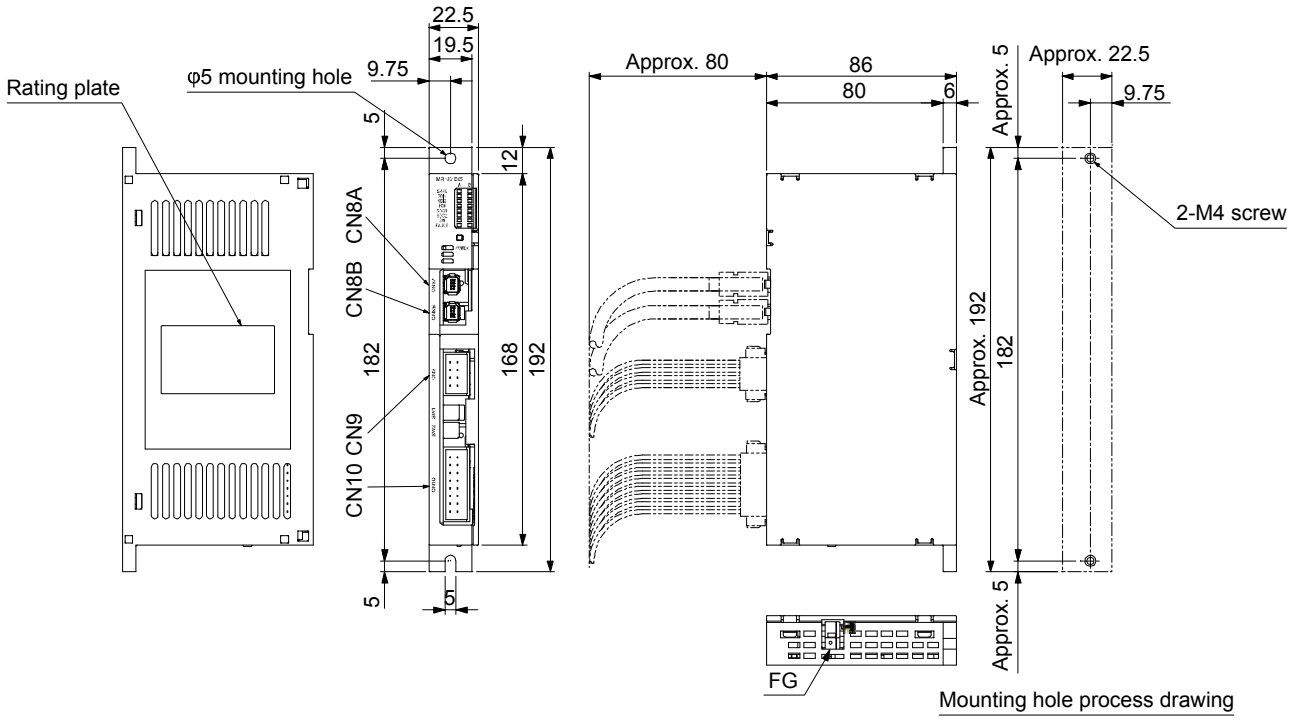

Pin assignment

CN8A

7 TOF2A	8 TOF1A
5 STO2A-	6 STO2A+
3	4 STO1A+
1 STO1A-	2

CN8B

7 TOF2B	8 TOF1B
5 STO2B-	6 STO2B+
3	4 STO1B+
1 STO1B-	2

CN9

1A SDI1A+	1B SDI1A-
2A SDI1B+	2B SDI1B-
3A SDO1B+	3B SDO1B-
4A SDO1A+	4B SDO1A-

CN10

1A SRESA+	1B SRESA-
2A SRESB+	2B SRESB-
3A SDI2A+	3B SDI2A-
4A SDI2B+	4B SDI2B-
5A SDO2B+	5B SDO2B-
6A SDO2A+	6B SDO2A-
7A +24 V	7B 0 V
8A TOFA	8B TOFB

Mounting screw

Screw size: M4

Tightening torque: 1.2 N•m

Mass: 0.2 [kg]

App. 5.13 Installation

Follow the instructions in this section and install MR-J3-D05 in the specified direction. Leave clearances between MR-J3-D05 and other equipment including the cabinet.

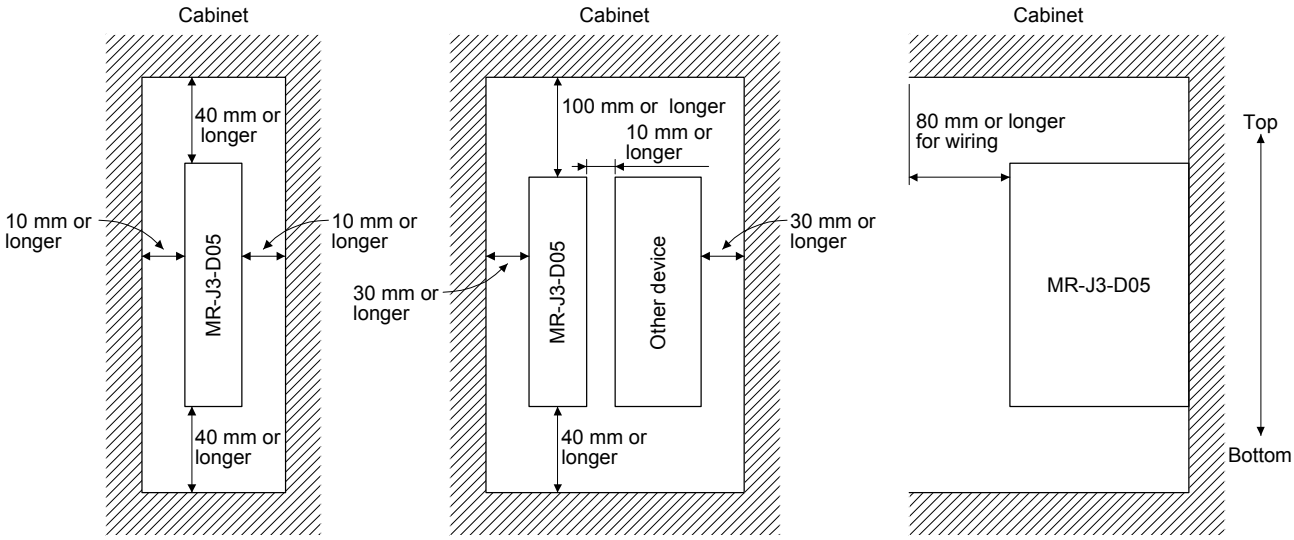

App. 5.14 Combinations of cable/connector

POINT
●MR-D05UDL_M (STO cable) for MR-J3 series cannot be used.

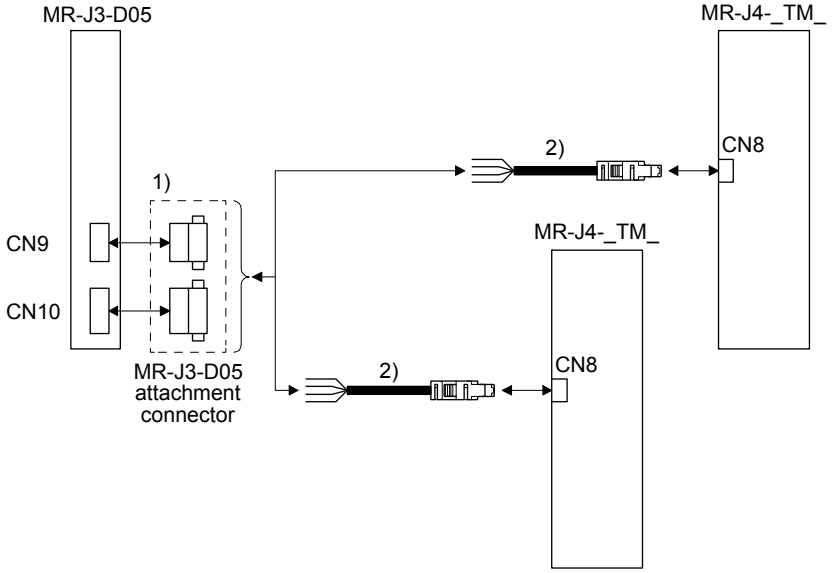

No.	Product	Model	Description
1)	Connector	MR-J3-D05 attachment connector	Connector for CN9: 1-1871940-4 (TE Connectivity) Connector for CN10: 1-1871940-8 (TE Connectivity)
2)	STO cable	MR-D05UDL3M-B Cable length: 3 m	Connector set: 2069250-1 (TE Connectivity)

App. 6 EC declaration of conformity

The MR-J4 series servo amplifiers and MR-J3-D05 safety logic unit complies with the safety component laid down in the Machinery directive.

ZERTIFIKAT ◆ CERTIFICATE ◆ 認証証書 ◆ СЕРТИФИКАТ ◆ CERTIFICADO ◆ CERTIFICAT

Product Service

CERTIFICATE

No. Z10 16 08 66509 026

Holder of Certificate: **MITSUBISHI ELECTRIC CORPORATION**
Nagoya Works
5-1-14, Yada-Minami
Higashi-ku, Nagoya-shi
Aichi
461-8670 JAPAN

Factory(ies): 66509, 83304

Certification Mark:

Product: **AC servo systems**

Model(s): **Drive Unit MR-J4 Series**
Drive Unit MR-JE Series
For nomenclature see attachment

Parameters:

Safety function (EN 61800-5-2):	STO
Ambient temperature:	
Operation:	0°C to 55°C
Storage:	-20°C to 65°C
Altitude:	max. 2000m above sea level

Tested according to:
EN ISO 13849-1:2015 (Cat 3, PL e)
EN 62061:2005/A2:2015 (SILCL 3)
IEC 62061(ed.1);am1;am2
IEC 61508-1(ed.2) (SIL 3)
IEC 61508-2(ed.2) (SIL 3)
IEC 61508-4(ed.2) (SIL 3)
EN 61800-5-1:2007
IEC 61800-5-1(ed.2)
EN 61800-5-2:2007
IEC 61800-5-2(ed.2)
IEC 61326-3-1(ed.1)

The product was tested on a voluntary basis and complies with the essential requirements. The certification mark shown above can be affixed on the product. It is not permitted to alter the certification mark in any way. In addition the certification holder must not transfer the certificate to third parties. See also notes overleaf.

Test report no.: MN86533T
Valid until: 2021-08-24

Date, 2016-08-25 (Günter Greil)

719595

Page 1 of 3

A1 / 04.11

TÜV SÜD Product Service GmbH · Zertifizierstelle · Ridlerstraße 65 · 80339 München · Germany

TÜVRheinland®

ZERTIFIKAT
CERTIFICATE

Nr./No. 968/EL 612.00/09

Prüfgegenstand **Product tested**	Safety Logic Module for usage in combination with MR-J3-□S Servo Drives	**Inhaber** **Holder**	Mitsubishi Electric Corporation Nagoya Works 1-14 Yada-Minami 5-chome, Higashi-ku Nagoya 461-8670 Japan
Typbezeichnung **Type designation**	MR-J3-D05	**Verwendungs-zweck** **Intended application**	Drive Applications STO / SS1 acc. to EN 61800-5-2 Safe Stop / Safe Off Stop Category 0 / Stop Category 1 acc. to EN 60204-1
Prüfgrundlagen **Codes and standards forming the basis of testing**	EN ISO 13849-1:2008 EN 62061:2005 EN 61800-5-2:2007 EN 61800-5-1:2007	EN 61800-3:2004 EN 60204-1:2006 EN 50178:1997 EN 61508-1 to -7:2000-2002	
Prüfungsergebnis **Test results**	The MR-J3-D05 Safety Logic Module in combination with the MR-J3 series servo drives is suitable for the basic safety functions "STO" and "SS1" (Type C) according to EN 61800-5-2 as well as "Safe Stop" (Stop category 0 and Stop category 1) and "Safe Off" according to EN 60204-1. It can be used within safety related applications up to Safety Category 3 / PL d and SIL 2 / SIL CL 2 according to EN ISO 13849-1 and EN 62061.		
Besondere Bedingungen **Specific requirements**	For a safe usage of the product the instructions in the user documentation must be observed. For "Safe Off" two suitable additional magnetic contactors must be used additionally.		

Der Prüfbericht-Nr.: 968/EL 612.00/09 vom 21.04.2009 ist Bestandteil dieses Zertifikates.
Dieses Zertifikat ist nur gültig für Erzeugnisse, die mit dem Prüfgegenstand übereinstimmen. Es wird ungültig bei jeglicher Änderung der Prüfgrundlagen für den angegebenen Verwendungszweck.

The test report-no.: 968/EL 612.00/09 dated 2009-04-21 is an integral part of this certificate.
This certificate is valid only for products which are identical with the product tested. It becomes invalid at any change of the codes and standards forming the basis of testing for the intended application.

TÜV Rheinland Industrie Service GmbH
Geschäftsfeld ASI
Automation, Software und Informationstechnologie
Am Grauen Stein, 51105 Köln
Postfach 91 09 51, 51101 Köln

H. Gall

2009-04-21
Datum/Date

Firmenstempel/Company stamp

Dipl.-Ing. Heinz Gall

App. 7 How to replace servo amplifier without magnetic pole detection

⚠CAUTION	●Be sure to write the magnetic pole information of the servo amplifier before the replacement to the servo amplifier after the replacement. If the information before and after replacement are not the same, the servo motor may operate unexpectedly.

When replacing the servo amplifier, carry out the magnetic pole detection again. If the magnetic pole detection cannot be performed unavoidably, write the magnetic pole information from the servo amplifier before the replacement to the one after the replacement using MR Configurator2.

(1) Procedures

(a) Read the magnetic pole information of the servo amplifier before the replacement.

(b) Write the read magnetic pole information to the servo amplifier after the replacement.

(c) Perform the test operation with the torque limit for ensuring the safety, and confirm that there is no trouble.

(2) Migration method of the magnetic pole information

(a) How to read the magnetic pole information from the servo amplifier before the replacement

1) Open the project in MR Configurator2, select "MR-J4-TM" for model, and select "Linear" for operation mode.

2) Check that the personal computer is connected with the servo amplifier, and select "Diagnosis" and then "Linear diagnosis".

3) Click "Magnetic pole information" (1) in figure) to open the magnetic pole information window.

4) Click "Read All" of the magnetic pole information window. (2) in figure)

5) Confirm the data 1 and data 2 (3) in figure) of the magnetic pole information window and take notes.

(b) How to write the magnetic pole information to the servo amplifier after the replacement

1) Open the project in MR Configurator2, select "MR-J4-TM" for model, and select "Linear" for operation mode.

2) Check that the personal computer is connected with the servo amplifier, and select "Diagnosis" and then "Linear diagnosis".

3) Click "Magnetic pole information" (1) in figure) to open the magnetic pole information window.

4) Input the value of the magnetic pole information taken notes to the data 1 and data 2 (3) in figure) of the magnetic pole information window.

5) Click "Write All" (4) in figure) of the magnetic pole information window.

6) Cycle the power of the servo amplifier.

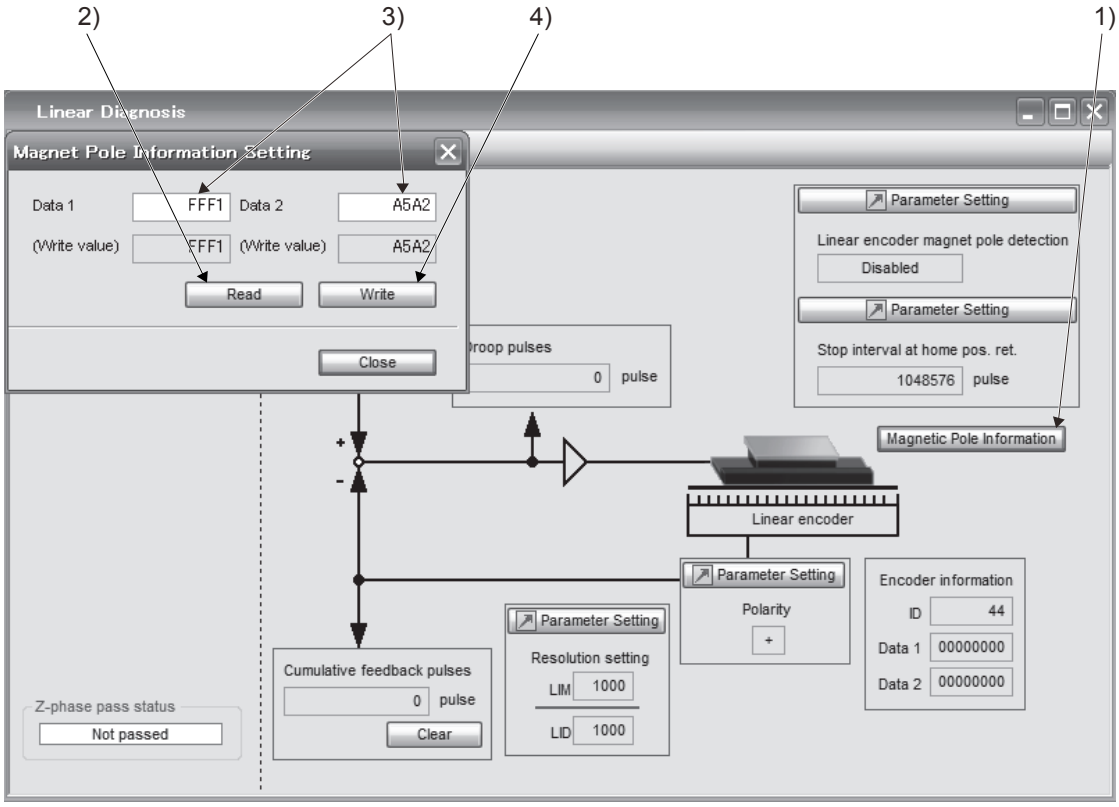

App. 8 Analog monitor

POINT
●A voltage of analog monitor output may be irregular at power-on.

The servo status can be output to two channels in terms of voltage.

App. 8.1 Setting

Change the following digits of [Pr. PC09] and [Pr. PC10].

[Pr. PC09]

0	0		

Analog monitor 1 output selection
(the signal provided to the output across MO1 and LG)

[Pr. PC10]

0	0		

Analog monitor 2 output selection
(the signal provided to the output across MO2 and LG)

[Pr. PC11] and [Pr. PC12] can be used to set the offset voltages to the analog output voltages. Setting value is -999 mV to 999 mV.

Parameter	Description	Setting range [mV]
PC11	This is used to set the offset voltage of MO1 (Analog monitor 1).	-999 to 999
PC12	This is used to set the offset voltage of MO2 (Analog monitor 2).	

App. 8.2 Setting

POINT

●When you use a linear servo motor, replace the following words in the left to the words in the right.

CCW direction	→ Positive direction
CW direction	→ Negative direction
Torque	→ Thrust

The servo amplifier is factory-set to output the servo motor speed to MO1 (Analog monitor 1) and the torque to MO2 (Analog monitor 2). The setting can be changed as listed below by setting the [Pr. PC09] and [Pr. PC10] value.
Refer to app.8.3 for detecting point.

Setting value	Output item	Description	Setting value	Output item	Description
00	Servo motor speed	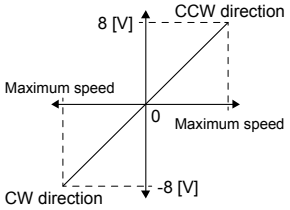	01	Torque/Thrust (Note 7)	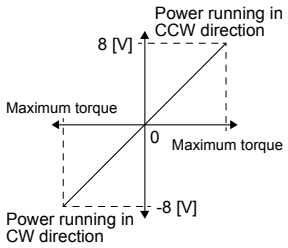
02	Servo motor speed	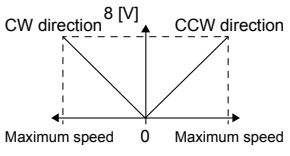	03	Torque/Thrust (Note 7)	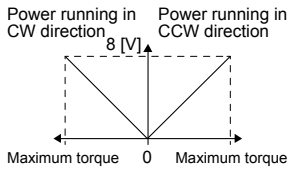
04	Current command (Note 7)	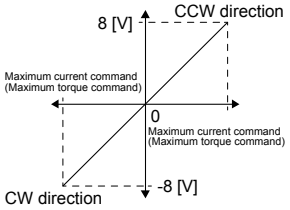	05	Speed command (Note 3)	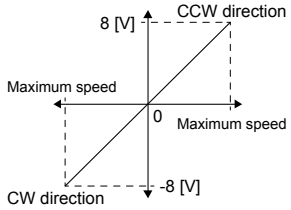
06	Servo motor-side droop pulses (Note 1, 3, 5, 6) (±10 V/100 pulses)	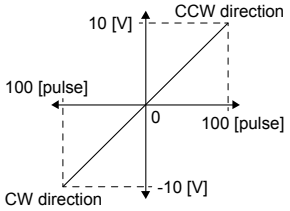	07	Servo motor-side droop pulses (Note 1, 3, 5, 6) (±10 V/1000 pulses)	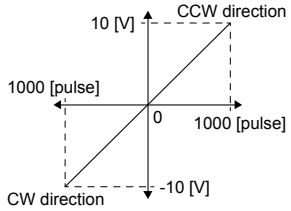
08	Servo motor-side droop pulses (Note 1, 3, 5, 6) (±10 V/10000 pulses)	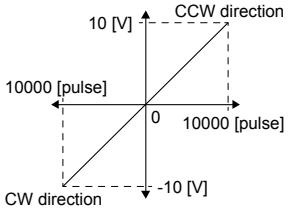	09	Servo motor-side droop pulses (Note 1, 3, 5, 6) (±10 V/100000 pulses)	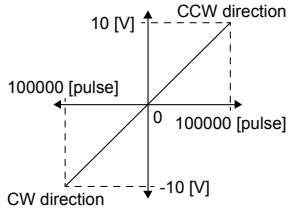

Setting value	Output item	Description	Setting value	Output item	Description
0D	Bus voltage (Note 4)	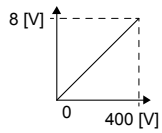	0E	Speed command 2 (Note 3)	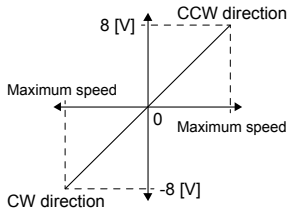
10	Load-side droop pulses (Note 3, 5, 6) (±10 V/100 pulses)	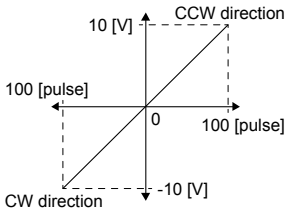	11	Load-side droop pulses (Note 3, 5, 6) (±10 V/1000 pulses)	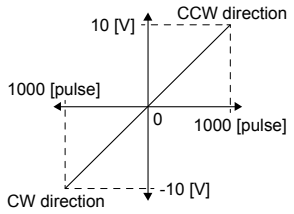
12	Load-side droop pulses (Note 3, 5, 6) (±10 V/10000 pulses)	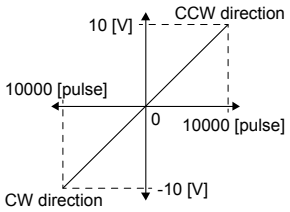	13	Load-side droop pulses (Note 3, 5, 6) (±10 V/100000 pulses)	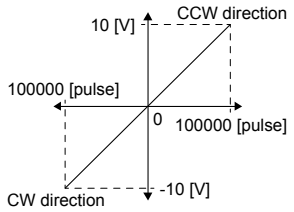
14	Load-side droop pulses (Note 3, 5, 6) (±10 V/1 Mpulses)	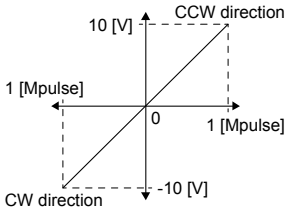	15	Motor-side/load-side position deviation (Note 3, 5, 6) (±10 V/100000 pulses)	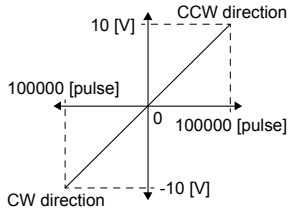
16	Servo motor-side/load-side speed deviation	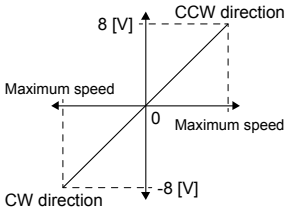	17	Internal temperature of encoder (±10 V/ ±128 °C)	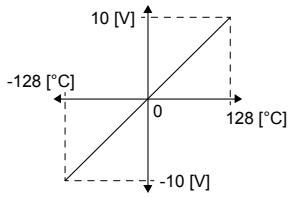

Note 1. Encoder pulse unit.
2. Available in position mode
3. This cannot be used in the torque mode.
4. For 400 V class servo amplifier, the bus voltage becomes +8 V/800 V.
5. This cannot be used in the velocity mode.
6. Output in the load-side encoder unit for the fully closed loop control. Output in the servo motor encoder unit for the semi closed loop control.
7. For details on the value of the maximum current command (maximum torque) for ±8 V, refer to app. 8.4.

App. 8.3 Analog monitor block diagram

App. 8.3.1 Semi closed loop control

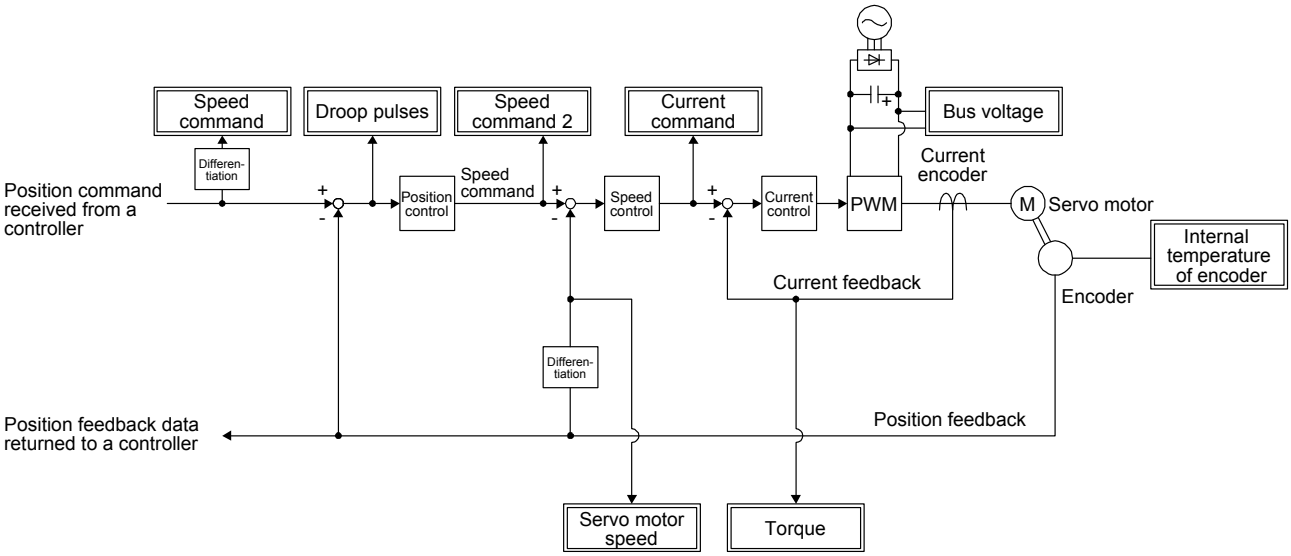

App. 8.3.2 Fully closed loop control

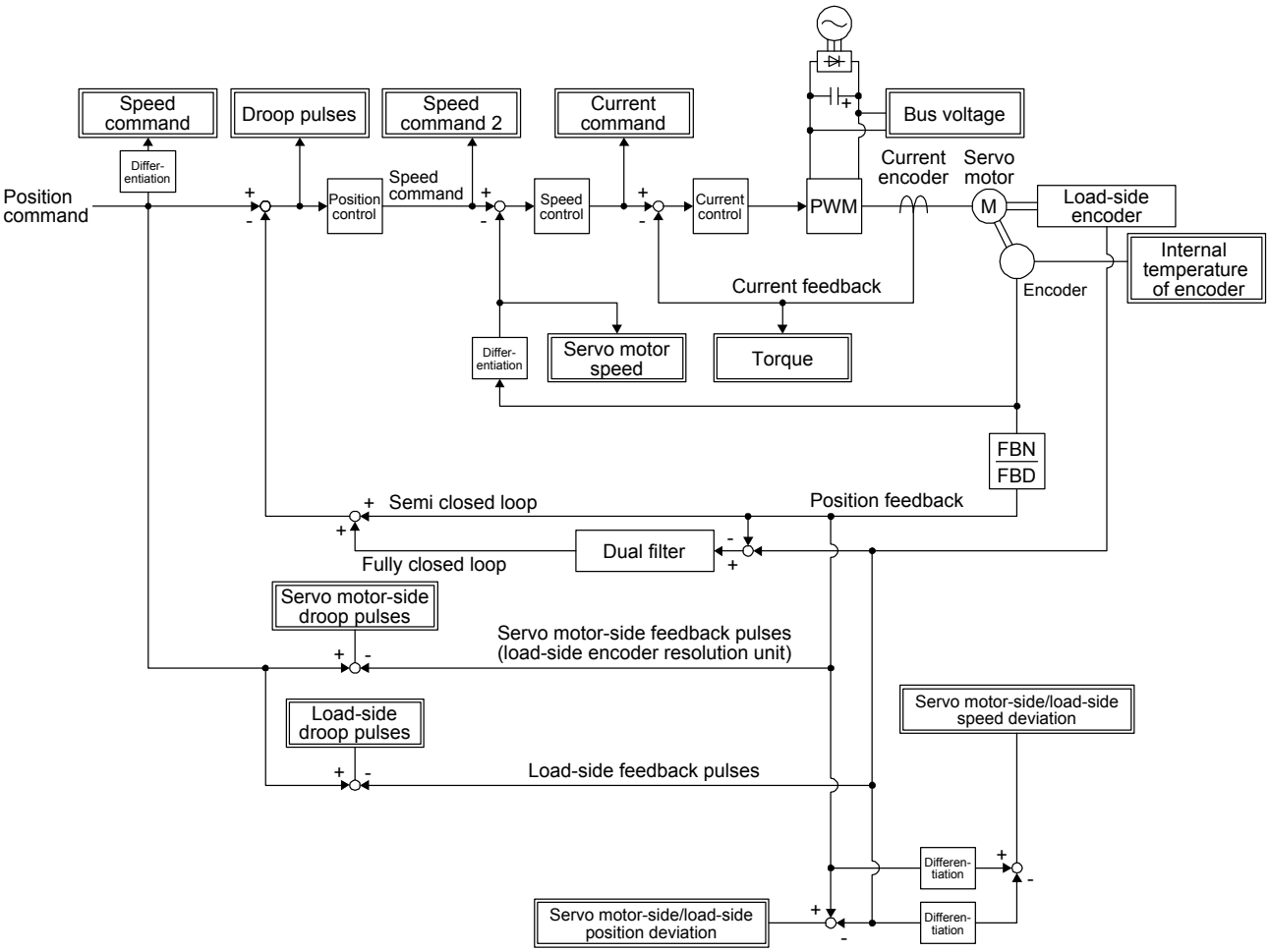

App. 8.4 Maximum current command (maximum torque) for analog monitor ±8 V

Values of the maximum current command (maximum torque) when the analog monitor is ±8 V are listed. The current command (torque) outputs the maximum current command (maximum torque) at ±8 V. The maximum current command (maximum torque) may not match the rated current/maximum current ratio since it is created from the torque current in the servo amplifier.

App. 8.4.1 Rotary servo motor

(1) 200 V/100 V class

Servo motor		Servo amplifier/drive unit	Maximum current command (maximum torque) [%]
HG-KR series	HG-KR053	MR-J4-10_(-RJ)/MR-J4-10_1(-RJ)	370
	HG-KR13	MR-J4-10_(-RJ)/MR-J4-10_1(-RJ)	373
	HG-KR23	MR-J4-20_(-RJ)/MR-J4-20_1(-RJ)	387
	HG-KR43	MR-J4-40_(-RJ)/MR-J4-40_1(-RJ)	383
	HG-KR73	MR-J4-70_(-RJ)	367
HG-MR series	HG-MR053	MR-J4-10_(-RJ)/MR-J4-10_1(-RJ)	342
	HG-MR13	MR-J4-10_(-RJ)/MR-J4-10_1(-RJ)	336
	HG-MR23	MR-J4-20_(-RJ)/MR-J4-20_1(-RJ)	396
	HG-MR43	MR-J4-40_(-RJ)/MR-J4-40_1(-RJ)	361
	HG-MR73	MR-J4-70_(-RJ)	345
HG-SR 1000 r/min series	HG-SR51	MR-J4-60_(-RJ)	311
	HG-SR81	MR-J4-100_(-RJ)	329
	HG-SR121	MR-J4-200_(-RJ)	353
	HG-SR201	MR-J4-200_(-RJ)	334
	HG-SR301	MR-J4-350_(-RJ)	366
	HG-SR421	MR-J4-500_(-RJ)	347
HG-SR 2000 r/min series	HG-SR52	MR-J4-60_(-RJ)	302
	HG-SR102	MR-J4-100_(-RJ)	310
	HG-SR152	MR-J4-200_(-RJ)	320
	HG-SR202	MR-J4-200_(-RJ)	327
	HG-SR352	MR-J4-350_(-RJ)	332
	HG-SR502	MR-J4-500_(-RJ)	341
	HG-SR702	MR-J4-700_(-RJ)/MR-J4-DU900_(-RJ)	336
HG-UR series	HG-UR72	MR-J4-70_(-RJ)	355
	HG-UR152	MR-J4-200_(-RJ)	340
	HG-UR202	MR-J4-350_(-RJ)	350
	HG-UR352	MR-J4-500_(-RJ)	320
	HG-UR502	MR-J4-500_(-RJ)	330
HG-RR series	HG-RR103	MR-J4-200_(-RJ)	300
	HG-RR153	MR-J4-200_(-RJ)	250
	HG-RR203	MR-J4-350_(-RJ)	290
	HG-RR353	MR-J4-500_(-RJ)	270
	HG-RR503	MR-J4-500_(-RJ)	270
HG-JR 1000 r/min series	HG-JR601	MR-J4-700_(-RJ)/MR-J4-DU900_(-RJ)	337
	HG-JR801	MR-J4-11K_(-RJ)/MR-J4-DU900_(-RJ)	366
	HG-JR12K1	MR-J4-11K_(-RJ)/MR-J4-DU11K_(-RJ)	346
	HG-JR15K1	MR-J4-15K_(-RJ)/MR-J4-DU15K_(-RJ)	339
	HG-JR20K1	MR-J4-22K_(-RJ)/MR-J4-DU22K_(-RJ)	337
	HG-JR25K1	MR-J4-22K_(-RJ)/MR-J4-DU22K_(-RJ)	330
	HG-JR30K1	MR-J4-DU30K_(-RJ)	330
	HG-JR37K1	MR-J4-DU37K_(-RJ)	330

Servo motor		Servo amplifier/drive unit	Maximum current command (maximum torque) [%]
HG-JR 1500 r/min series	HG-JR701M	MR-J4-700_(-RJ)/MR-J4-DU900_(-RJ)	326
	HG-JR11K1M	MR-J4-11K_(-RJ)/MR-J4-DU11K_(-RJ)	335
	HG-JR15K1M	MR-J4-15K_(-RJ)/MR-J4-DU15K_(-RJ)	334
	HG-JR22K1M	MR-J4-22K_(-RJ)/MR-J4-DU22K_(-RJ)	317
	HG-JR30K1M	MR-J4-DU30K_(-RJ)	342
	HG-JR37K1M	MR-J4-DU37K_(-RJ)	365
HG-JR 3000 r/min series	HG-JR53	MR-J4-60_(-RJ)	341
		MR-J4-100_(-RJ)	460
	HG-JR73	MR-J4-70_(-RJ)	331
		MR-J4-200_(-RJ)	460
	HG-JR103	MR-J4-100_(-RJ)	341
		MR-J4-200_(-RJ)	460
	HG-JR153	MR-J4-200_(-RJ)	320
		MR-J4-350_(-RJ)	460
	HG-JR203	MR-J4-200_(-RJ)	320
		MR-J4-350_(-RJ)	460
	HG-JR353	MR-J4-350_(-RJ)	307
		MR-J4-500_(-RJ)	464
	HG-JR503	MR-J4-500_(-RJ)	342
		MR-J4-700_(-RJ)/MR-J4-DU900_(-RJ)	430
	HG-JR703	MR-J4-700_(-RJ)/MR-J4-DU900_(-RJ)	341
	HG-JR903	MR-J4-11K_(-RJ)/MR-J4-DU900_(-RJ)	352

(2) 400 V class

Servo motor		Servo amplifier/drive unit	Maximum current command (maximum torque) [%]
HG-SR 2000 r/min series	HG-SR524	MR-J4-60_4(-RJ)	313
	HG-SR1024	MR-J4-100_4(-RJ)	322
	HG-SR1524	MR-J4-200_4(-RJ)	330
	HG-SR2024	MR-J4-200_4(-RJ)	327
	HG-SR3524	MR-J4-350_4(-RJ)	336
	HG-SR5024	MR-J4-500_4(-RJ)	336
	HG-SR7024	MR-J4-700_4(-RJ)/MR-J4-DU900_4(-RJ)	346
HG-JR 1000 r/min series	HG-JR6014	MR-J4-700_4(-RJ)/MR-J4-DU900_4(-RJ)	337
	HG-JR8014	MR-J4-11K_4(-RJ)/MR-J4-DU11K_4(-RJ)	336
	HG-JR12K14	MR-J4-11K_4(-RJ)/MR-J4-DU11K_4(-RJ)	346
	HG-JR15K14	MR-J4-15K_4(-RJ)/MR-J4-DU15K_4(-RJ)	335
	HG-JR20K14	MR-J4-22K_4(-RJ)/MR-J4-DU22K_4(-RJ)	341
	HG-JR25K14	MR-J4-22K_4(-RJ)/MR-J4-DU22K_4(-RJ)	337
	HG-JR30K14	MR-J4-DU30K_4(-RJ)	330
	HG-JR37K14	MR-J4-DU37K_4(-RJ)	330
HG-JR 1500 r/min series	HG-JR701M4	MR-J4-700_4(-RJ)/MR-J4-DU900_4(-RJ)	329
	HG-JR11K1M4	MR-J4-11K_4(-RJ)/MR-J4-DU11K_4(-RJ)	338
	HG-JR15K1M4	MR-J4-15K_4(-RJ)/MR-J4-DU15K_4(-RJ)	338
	HG-JR22K1M4	MR-J4-22K_4(-RJ)/MR-J4-DU22K_4(-RJ)	342
	HG-JR30K1M4	MR-J4-DU30K_4(-RJ)	335
	HG-JR37K1M4	MR-J4-DU37K_4(-RJ)	323
	HG-JR45K1M4	MR-J4-DU45K_4(-RJ)	344
	HG-JR55K1M4	MR-J4-DU55K_4(-RJ)	321
HG-JR 3000 r/min series	HG-JR534	MR-J4-60_4(-RJ)	320
		MR-J4-100_4(-RJ)	460
	HG-JR734	MR-J4-100_4(-RJ)	320
		MR-J4-200_4(-RJ)	459
	HG-JR1034	MR-J4-100_4(-RJ)	320
		MR-J4-200_4(-RJ)	459
	HG-JR1534	MR-J4-200_4(-RJ)	320
		MR-J4-350_4(-RJ)	459
	HG-JR2034	MR-J4-200_4(-RJ)	320
		MR-J4-350_4(-RJ)	459
	HG-JR3534	MR-J4-350_4(-RJ)	320
		MR-J4-500_4(-RJ)	470
	HG-JR5034	MR-J4-500_4(-RJ)	320
		MR-J4-700_4(-RJ)/MR-J4-DU900_4(-RJ)	413
	HG-JR7034	MR-J4-700_4(-RJ)/MR-J4-DU900_4(-RJ)	337
	HG-JR9034	MR-J4-11K_4(-RJ)/MR-J4-DU900_4(-RJ)	336

(3) 24 V/48 V class

Servo motor		Servo amplifier/drive unit	Maximum current command (maximum torque) [%]
HG-AK series	HG-AK0136	MR-J4-03A6/MR-J4W2-0303B6	380
	HG-AK0236	MR-J4-03A6/MR-J4W2-0303B6	380
	HG-AK0336	MR-J4-03A6/MR-J4W2-0303B6	363

App. 8.4.2 Servo motor with functional safety

(1) 200 V/100 V class

Servo motor		Servo amplifier/drive unit	Maximum current command (maximum torque) [%]
HG-KR series	HG-KR053W0C	MR-J4-10_(-RJ)/MR-J4-10_1(-RJ)	370
	HG-KR13W0C	MR-J4-10_(-RJ)/MR-J4-10_1(-RJ)	373
	HG-KR23W0C	MR-J4-20_(-RJ)/MR-J4-20_1(-RJ)	387
	HG-KR43W0C	MR-J4-40_(-RJ)/MR-J4-40_1(-RJ)	383
	HG-KR73W0C	MR-J4-70_(-RJ)	367
HG-SR 1000 r/min series	HG-SR51W0C	MR-J4-60_(-RJ)	311
	HG-SR81W0C	MR-J4-100_(-RJ)	329
	HG-SR121W0C	MR-J4-200_(-RJ)	353
	HG-SR201W0C	MR-J4-200_(-RJ)	334
	HG-SR301W0C	MR-J4-350_(-RJ)	366
	HG-SR421W0C	MR-J4-500_(-RJ)	347
HG-SR 2000 r/min series	HG-SR52W0C	MR-J4-60_(-RJ)	302
	HG-SR102W0C	MR-J4-100_(-RJ)	310
	HG-SR152W0C	MR-J4-200_(-RJ)	320
	HG-SR202W0C	MR-J4-200_(-RJ)	327
	HG-SR352W0C	MR-J4-350_(-RJ)	332
	HG-SR502W0C	MR-J4-500_(-RJ)	341
	HG-SR702W0C	MR-J4-700_(-RJ)/MR-J4-DU900_(-RJ)	336
HG-JR 1500 r/min series	HG-JR701MW0C	MR-J4-700_(-RJ)/MR-J4-DU900_(-RJ)	326
	HG-JR11K1MW0C	MR-J4-11K_(-RJ)/MR-J4-DU11K_(-RJ)	335
	HG-JR15K1MW0C	MR-J4-15K_(-RJ)/MR-J4-DU15K_(-RJ)	334
	HG-JR22K1MW0C	MR-J4-22K_(-RJ)/MR-J4-DU22K_(-RJ)	317
HG-JR 3000 r/min series	HG-JR53W0C	MR-J4-60_(-RJ)	341
		MR-J4-100_(-RJ)	460
	HG-JR73W0C	MR-J4-70_(-RJ)	331
		MR-J4-200_(-RJ)	460
	HG-JR103W0C	MR-J4-100_(-RJ)	341
		MR-J4-200_(-RJ)	460
	HG-JR153W0C	MR-J4-200_(-RJ)	320
		MR-J4-350_(-RJ)	460
	HG-JR203W0C	MR-J4-200_(-RJ)	320
		MR-J4-350_(-RJ)	460
	HG-JR353W0C	MR-J4-350_(-RJ)	307
		MR-J4-500_(-RJ)	464
	HG-JR503W0C	MR-J4-500_(-RJ)	342
		MR-J4-700_(-RJ)/MR-J4-DU900_(-RJ)	430
	HG-JR703W0C	MR-J4-700_(-RJ)/MR-J4-DU900_(-RJ)	341
	HG-JR903W0C	MR-J4-11K_(-RJ)/MR-J4-DU900_(-RJ)	352

(2) 400 V class

Servo motor		Servo amplifier/drive unit	Maximum current command (maximum torque) [%]
HG-SR 2000 r/min series	HG-SR524W0C	MR-J4-60_4(-RJ)	313
	HG-SR1024W0C	MR-J4-100_4(-RJ)	322
	HG-SR1524W0C	MR-J4-200_4(-RJ)	330
	HG-SR2024W0C	MR-J4-200_4(-RJ)	327
	HG-SR3524W0C	MR-J4-350_4(-RJ)	336
	HG-SR5024W0C	MR-J4-500_4(-RJ)	336
	HG-SR7024W0C	MR-J4-700_4(-RJ)/MR-J4-DU900_4(-RJ)	346
HG-JR 1500 r/min series	HG-JR701M4W0C	MR-J4-700_4(-RJ)/MR-J4-DU900_4(-RJ)	329
	HG-JR11K1M4W0C	MR-J4-11K_4(-RJ)/MR-J4-DU11K_4(-RJ)	338
	HG-JR15K1M4W0C	MR-J4-15K_4(-RJ)/MR-J4-DU15K_4(-RJ)	338
	HG-JR22K1M4W0C	MR-J4-22K_4(-RJ)/MR-J4-DU22K_4(-RJ)	342
HG-JR 3000 r/min series	HG-JR534W0C	MR-J4-60_4(-RJ)	320
		MR-J4-100_4(-RJ)	460
	HG-JR734W0C	MR-J4-100_4(-RJ)	320
		MR-J4-200_4(-RJ)	459
	HG-JR1034W0C	MR-J4-100_4(-RJ)	320
		MR-J4-200_4(-RJ)	459
	HG-JR1534W0C	MR-J4-200_4(-RJ)	320
		MR-J4-350_4(-RJ)	459
	HG-JR2034W0C	MR-J4-200_4(-RJ)	320
		MR-J4-350_4(-RJ)	459
	HG-JR3534W0C	MR-J4-350_4(-RJ)	320
		MR-J4-500_4(-RJ)	470
	HG-JR5034W0C	MR-J4-500_4(-RJ)	320
		MR-J4-700_4(-RJ)/MR-J4-DU900_4(-RJ)	413
	HG-JR7034W0C	MR-J4-700_4(-RJ)/MR-J4-DU900_4(-RJ)	337
	HG-JR9034W0C	MR-J4-700_4(-RJ)/MR-J4-DU900_4(-RJ)	336

App. 8.4.3 Linear servo motor (primary side)

(1) 200 V/100 V class

Linear servo motor (primary side)			Servo amplifier/drive unit	Maximum current command (maximum torque) [%]
LM-H3 series	LM-H3P2A-07P-BSS0		MR-J4-40_(-RJ)/MR-J4-40_1(-RJ)	390
	LM-H3P3A-12P-CSS0		MR-J4-40_(-RJ)/MR-J4-40_1(-RJ)	340
	LM-H3P3B-24P-CSS0		MR-J4-70_(-RJ)	320
	LM-H3P3C-36P-CSS0		MR-J4-70_(-RJ)	350
	LM-H3P3D-48P-CSS0		MR-J4-200_(-RJ)	335
	LM-H3P7A-24P-ASS0		MR-J4-70_(-RJ)	315
	LM-H3P7B-48P-ASS0		MR-J4-200_(-RJ)	297
	LM-H3P7C-72P-ASS0		MR-J4-200_(-RJ)	320
	LM-H3P7D-96P-ASS0		MR-J4-350_(-RJ)	320
LM-F series	LM-FP2B-06M-1SS0	(Natural cooling)	MR-J4-200_(-RJ)	756
		(Liquid cooling)	MR-J4-200_(-RJ)	355
	LM-FP2D-12M-1SS0	(Natural cooling)	MR-J4-500_(-RJ)	815
		(Liquid cooling)	MR-J4-500_(-RJ)	409
	LM-FP2F-18M-1SS0	(Natural cooling)	MR-J4-700_(-RJ)/MR-J4-DU900_(-RJ)	800
		(Liquid cooling)	MR-J4-700_(-RJ)/MR-J4-DU900_(-RJ)	409
	LM-FP4B-12M-1SS0	(Natural cooling)	MR-J4-500_(-RJ)	742
		(Liquid cooling)	MR-J4-500_(-RJ)	383
	LM-FP4D-24M-1SS0	(Natural cooling)	MR-J4-700_(-RJ)/MR-J4-DU900_(-RJ)	778
		(Liquid cooling)	MR-J4-700_(-RJ)/MR-J4-DU900_(-RJ)	384
	LM-FP4F-36M-1SS0	(Natural cooling)	MR-J4-11K_(-RJ)/MR-J4-DU11K_(-RJ)	709
		(Liquid cooling)	MR-J4-11K_(-RJ)/MR-J4-DU11K_(-RJ)	356
	LM-FP4H-48M-1SS0	(Natural cooling)	MR-J4-15K_(-RJ)/MR-J4-DU15K_(-RJ)	763
		(Liquid cooling)	MR-J4-15K_(-RJ)/MR-J4-DU15K_(-RJ)	389
LM-K2 series	LM-K2P1A-01M-2SS1		MR-J4-40_(-RJ)/MR-J4-40_1(-RJ)	400
	LM-K2P1C-03M-2SS1		MR-J4-200_(-RJ)	375
	LM-K2P2A-02M-1SS1		MR-J4-70_(-RJ)	366
	LM-K2P2C-07M-1SS1		MR-J4-350_(-RJ)	380
	LM-K2P2E-12M-1SS1		MR-J4-500_(-RJ)	405
	LM-K2P3C-14M-1SS1		MR-J4-350_(-RJ)	354
	LM-K2P3E-24M-1SS1		MR-J4-500_(-RJ)	359
LM-U2 series	LM-U2PAB-05M-0SS0		MR-J4-20_(-RJ)/MR-J4-20_1(-RJ)	315
	LM-U2PAD-10M-0SS0		MR-J4-40_(-RJ)/MR-J4-40_1(-RJ)	318
	LM-U2PAF-15M-0SS0		MR-J4-40_(-RJ)/MR-J4-40_1(-RJ)	334
	LM-U2PBB-07M-1SS0		MR-J4-20_(-RJ)/MR-J4-20_1(-RJ)	325
	LM-U2PBD-15M-1SS0		MR-J4-60_(-RJ)	320
	LM-U2PBF-22M-1SS0		MR-J4-70_(-RJ)	322
	LM-U2P2B-40M-2SS0		MR-J4-200_(-RJ)	424
	LM-U2P2C-60M-2SS0		MR-J4-350_(-RJ)	434
	LM-U2P2D-80M-2SS0		MR-J4-500_(-RJ)	432

(2) 400 V class

Linear servo motor (primary side)			Servo amplifier/drive unit	Maximum current command (maximum torque) [%]
LM-F series	LM-FP5H-60M-1SS0	(Natural cooling)	MR-J4-22K_(-RJ)/MR-J4-DU22K_(-RJ)	738
		(Liquid cooling)	MR-J4-22K_(-RJ)/MR-J4-DU22K_(-RJ)	364

App. 8.4.4 Direct drive motor

(1) 200 V/100 V class

Direct drive motor		Servo amplifier/drive unit	Maximum current command (maximum torque) [%]
TM-RFM series	TM-RFM002C20	MR-J4-20_(-RJ)/MR-J4-20_1(-RJ)	320
	TM-RFM004C20	MR-J4-40_(-RJ)/MR-J4-40_1(-RJ)	321
	TM-RFM006C20	MR-J4-60_(-RJ)	320
	TM-RFM006E20	MR-J4-60_(-RJ)	333
	TM-RFM012E20	MR-J4-70_(-RJ)	321
	TM-RFM018E20	MR-J4-100_(-RJ)	321
	TM-RFM012G20	MR-J4-70_(-RJ)	300
	TM-RFM048G20	MR-J4-350_(-RJ)	321
	TM-RFM072G20	MR-J4-350_(-RJ)	321
	TM-RFM040J10	MR-J4-70_(-RJ)	323
	TM-RFM120J10	MR-J4-350_(-RJ)	321
	TM-RFM240J10	MR-J4-500_(-RJ)	321
TM-RG2M series	TM-RG2M002C30	MR-J4-20_(-RJ)/MR-J4-20_1(-RJ)	433
	TM-RG2M004E30	MR-J4-20_(-RJ)/MR-J4-20_1(-RJ)/ MR-J4-40_(-RJ)/MR-J4-40_1(-RJ)	324
	TM-RG2M009G30	MR-J4-40_(-RJ)/MR-J4-40_1(-RJ)	324
TM-RU2M series	TM-RU2M002C30	MR-J4-20_(-RJ)/MR-J4-20_1(-RJ)	433
	TM-RU2M004E30	MR-J4-20_(-RJ)/MR-J4-20_1(-RJ)/ MR-J4-40_(-RJ)/MR-J4-40_1(-RJ)	324
	TM-RU2M009G30	MR-J4-40_(-RJ)/MR-J4-40_1(-RJ)	324

App. 9 Special specification

App. 9.1 Amplifiers without dynamic brake

App. 9.1.1 Summary

This section explains servo amplifiers without a dynamic brake. The things not explained in this section will be the same as MR-J4-_TM_.

App. 9.1.2 Model

The following describes what each block of a model name indicates. Not all combinations of the symbols are available.

M R - J 4 - 6 0 T M 4 - E D

Series

Special specifications

Symbol	Special specifications
ED	Amplifiers without dynamic brake

Power supply

Symbol	Power supply
None	3-phase 200 V AC to 240 V AC
1	1-phase 100 V AC to 120 V AC
4	3-phase 380 V AC to 480 V AC

Rated output

Symbol	Rated output [kW]
10	0.1
20	0.2
40	0.4
60	0.6
70	0.75
100	1
200	2
350	3.5
500	5
700	7

App. 9.1.3 Specifications

Dynamic brake which is built in 7 kW or smaller servo amplifiers is removed.
Take safety measures such as making another circuit for an emergency stop, alarm occurrence, and power shut-off.
The following servo motors may function an electronic dynamic brake at an alarm occurrence.

Series	Servo motor
HG-KR	HG-KR053/HG-KR13/HG-KR23/HG-KR43
HG-MR	HG-MR053/HG-MR13/HG-MR23/HG-MR43
HG-SR	HG-SR51/HG-SR52

Setting the following parameter disables the electronic dynamic brake.

Parameter	Setting value
[Pr. PF06]	_ _ _ 2

When [Pr. PA04] is "2 _ _ _" (default), the motor can be a state of forced stop deceleration at an alarm occurrence. Setting "0 _ _ _" in [Pr. PA04] disables the forced stop deceleration function.

App. 9.2 Without regenerative resistor

App. 9.2.1 Summary

This section explains servo amplifiers without a regenerative resistor. The things not explained in this section will be the same as MR-J4-_TM_.

App. 9.2.2 Model

The following describes what each block of a model name indicates. Not all combinations of the symbols are available.

MR - J4 - 11KTM4 - PX

Series

Special specifications

Symbol	Special specifications
PX	Without regenerative resistor

Power supply

Symbol	Power supply
None	3-phase 200 V AC to 240 V AC
4	3-phase 380 V AC to 480 V AC

Rated output

Symbol	Rated output [kW]
11K	11
15K	15
22K	22

App. 9.2.3 Specifications

Indicates a servo amplifier of 11 kW to 22 kW that does not use a regenerative resistor as standard accessory. When using any of these servo amplifiers, always use the MR-RB5R, MR-RB9F, MR-RB9T, MR-RB5K-4, or MR-RB6K-4 regenerative option.

App. 9.3 Special coating-specification product (IEC 60721-3-3 Class 3C2)

App. 9.3.1 Summary

This section explains servo amplifiers with a special coating specification. Items not given in this section will be the same as MR-J4-_TM_.

App. 9.3.2 Model

The following describes what each block of a model name indicates. Not all combinations of the symbols are available.

MR-J4-60TM4-EB

Series

Rated output

Symbol	Rated output [kW]
10	0.1
20	0.2
40	0.4
60	0.6
70	0.75
100	1
200	2
350	3.5
500	5
700	7
11K	11
15K	15
22K	22

Power supply

Symbol	Power supply
None	3-phase 200 V AC to 240 V AC
1	1-phase 100 V AC to 120 V AC
4	3-phase 380 V AC to 480 V AC

Special specifications

Symbol	Special specifications
EB	MR-J4-_TM_ with a special coating specification (3C2)

App. 9.3.3 Specifications

(1) Special coating

Using the MR-J4 series in an atmosphere containing a corrosive gas may cause its corrosion with time, resulting in a malfunction. For the printed circuit board of the servo amplifiers with a special coating specification, a urethane coating agent is applied to some parts capable of being coated technically (except LEDs, connectors, terminal blocks, etc.) to improve the resistance to corrosive gases. Use a servo amplifier with a special coating specification specifically for applications susceptible to corrosive gases, including tire manufacturing and water treatment. Although the special coating-specification products have the improved resistance to corrosive gases, proper operations in environments mentioned above are not guaranteed. Therefore, perform periodic inspections for any abnormality.

(2) Standard for corrosive gases

In IEC 60721-3-3, corrosive gases refer to sea salt, sulfur dioxide, hydrogen sulfide, chlorine, hydrogen chloride, hydrogen fluoride, ammonia, ozone, and nitrogen oxides shown in the environmental parameter column of the table below.

The table also shows the corrosive gas concentrations defined in IEC 60721-3-3, Class 3C2.

Environmental parameter	Unit	3C2	
		Mean value	Maximum value
a) Sea salt	None	Salt mist	
b) Sulfur dioxide	cm^3/m^3	0.11	0.37
c) Hydrogen sulfide	cm^3/m^3	0.071	0.36
d) Chlorine	cm^3/m^3	0.034	0.1
e) Hydrogen chloride	cm^3/m^3	0.066	0.33
f) Hydrogen fluoride	cm^3/m^3	0.012	0.036
g) Ammonia	cm^3/m^3	1.4	4.2
h) Ozone	cm^3/m^3	0.025	0.05
i) Nitrogen oxides	cm^3/m^3	0.26	0.52

The special coating-specification products have the improved corrosion resistance in environments with corrosive gas concentrations conforming to IEC 60721-3-3, Class 3C2. We tested typical models and confirmed that their corrosive gas resistance was improved, compared with the standard models.

App. 10 Driving on/off of main circuit power supply with DC power supply

App. 10.1 Connection example

The power circuit is common to all capacity type of servo amplifiers. For the signal and wirings not given in this section, refer to section 3.1.1 to 3.1.3.

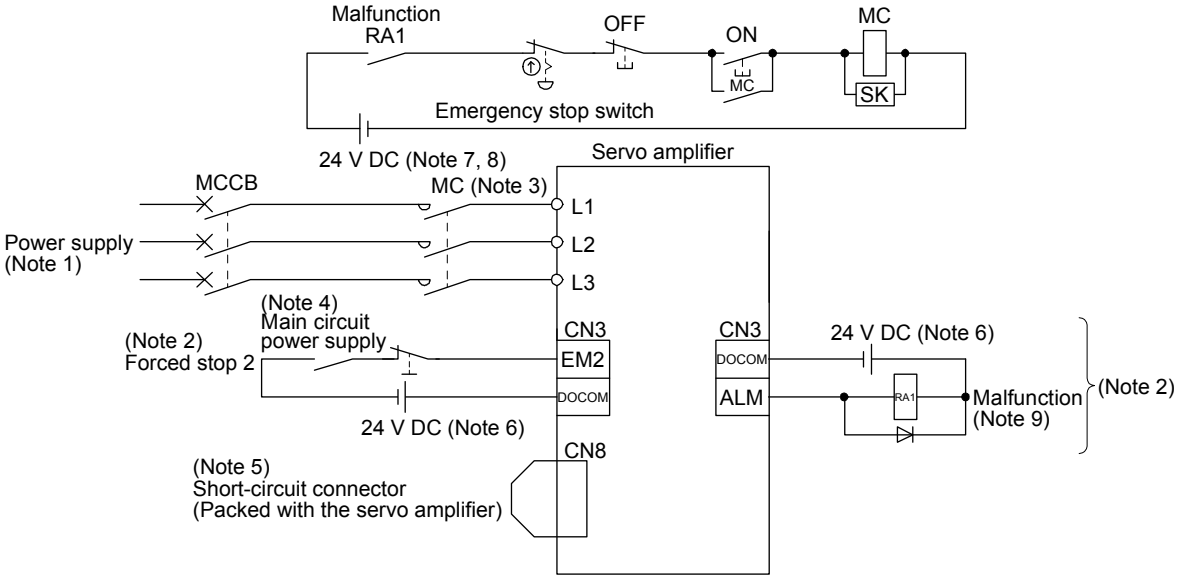

Note 1. For the power supply specifications, refer to section 1.3.
2. This diagram shows sink I/O interface. For source I/O interface, refer to section 3.8.3.
3. Use a magnetic contactor with an operation delay time (interval between current being applied to the coil until closure of contacts) of 80 ms or less. Depending on the main circuit voltage and operation pattern, bus voltage decreases, and that may cause the forced stop deceleration to shift to the dynamic brake deceleration. When dynamic brake deceleration is not required, slow the time to turn off the magnetic contactor.
4. Configure a circuit to turn off EM2 when the main circuit power is turned off to prevent an unexpected restart of the servo amplifier.
5. When not using the STO function, attach the short-circuit connector came with a servo amplifier.
6. The illustration of the 24 V DC power supply is divided between input signal and output signal for convenience. However, they can be configured by one.
7. Driving the on switch and off switch with the DC power supply meets IEC/EN 60204-1 requirements.
8. Do not use the 24 V DC interface power supply for the magnetic contactor DC power supply. Always use the power supply designed exclusively for the magnetic contactor.
9. If disabling ALM (Malfunction) output with the parameter, configure the power supply circuit which switches off the magnetic contactor after detection of alarm occurrence on the controller side.

App. 10.2 Magnetic contactor

Use a magnetic contactor with an operation delay time (interval between current being applied to the coil until closure of contacts) of 80 ms or less.

Servo amplifier	Magnetic contactor
MR-J4-10TM	SD-N11 SD-T12
MR-J4-20TM	
MR-J4-40TM	
MR-J4-60TM	
MR-J4-70TM	
MR-J4-100TM	
MR-J4-200TM	SD-N21 SD-T21
MR-J4-350TM	
MR-J4-500TM	SD-N35
MR-J4-700TM	SD-N50
MR-J4-11KTM	
MR-J4-15KTM	SD-N65
MR-J4-22KTM	SD-N95

Servo amplifier	Magnetic contactor
MR-J4-60TM4	SD-N11 SD-T12
MR-J4-100TM4	
MR-J4-200TM4	
MR-J4-350TM4	SD-N21 SD-T21
MR-J4-500TM4	
MR-J4-700TM4	
MR-J4-11KTM4	SD-N25
MR-J4-15KTM4	SD-N35
MR-J4-22KTM4	SD-N50
MR-J4-10TM1	SD-N11
MR-J4-20TM1	
MR-J4-40TM1	

REVISION

*The manual number is given on the bottom left of the back cover.

Revision Date	*Manual Number	Revision
Jul. 2015	SH(NA)030193ENG-A	First edition
Dec. 2015	SH(NA)030193ENG-B	100 V class servo amplifiers are added. MR-J4-11KTM(4) to MR-J4-22KTM(4) are added. Section 1.2 (1) (c) Newly added. Section 1.2 (2) (c) Newly added. Section 1.2 (3) Partially changed. Section 1.3 (1) Partially added. Section 1.3 (2) Partially added. Section 1.3 (3) Partially changed. Section 1.4 Point is partially changed. Section 1.4 (3) Partially changed. Section 1.6 (2) Partially added. Section 1.7.1 (1) (e) Newly added. Section 1.7.1 (1) (f) Newly added. Section 1.7.1 (2) (e) Newly added. Section 1.7.1 (2) (f) Newly added. Section 1.7.1 (3) Partially changed. Section 1.8.1 (1) (e) Newly added. Section 1.8.1 (1) (f) Newly added. Section 1.8.1 (2) (e) Newly added. Section 1.8.1 (2) (f) Newly added. Section 1.8.1 (3) Partially changed. Section 3.1.1 (5) Newly added. Section 3.1.2 (3) Newly added. Section 3.1.3 Partially changed. Section 3.3.1 Point is partially deleted. Section 3.3.3 (1) (a) Partially changed. Section 3.3.3 (1) (d) Partially changed. Section 4.3.2 (2) Partially added. Section 4.3.3 (2) Partially added. Section 5.2.4 Partially changed. Section 5.2.6 Point deleted. Section 6.2.2 (1) Partially added. Section 9.1 (1) (g) Newly added. Section 9.1 (1) (h) Newly added. Section 9.1 (2) (f) Newly added. Section 9.1 (2) (g) Newly added. Section 9.1 (3) Partially changed. Chapter 10 Point is partially deleted. Chapter 11 Point is partially deleted. Section 11.1.1 Partially changed. Section 11.5.2 (5) Partially added. Section 11.7.1 Partially changed. Section 11.7.2 (1) Partially changed. Section 11.10 (1) Partially changed. Section 11.16 Partially deleted. Section 12.1.4 Partially changed. Section 13.1.1 Partially added. Section 13.1.5 (1) Partially changed. App. 4 Partially changed. App. 10 Point deleted.
Apr. 2016	SH(NA)030193ENG-C	EtherNet/IP is supported. Compatible with MR-D30 functional safety unit The scale measurement function is added.

Revision Date	*Manual Number	Revision	
Apr. 2016	SH(NA)030193ENG-C	MR-BAT6V1BJ battery for junction battery cables are supported.	
		«About the manual»	Partially added.
		Section 1.1	CAUTION is added.
			Partially added.
		Section 1.3	Partially changed.
		Section 1.5	Partially added.
		Section 1.6 (2)	Partially added.
		Section 3.5.1	Partially added.
		Section 4.3	POINT is added.
		Section 4.3.2 (1)	Partially added.
		Section 4.3.3 (2)	Partially changed.
		Section 4.4	POINT is added.
		Section 4.5.2	Partially changed.
		Chapter 5	POINT is added.
		Section 5.1	Partially added.
			Partially changed.
		Section 5.2	POINT is added.
			Partially added.
			Partially changed.
		Section 5.4	Newly added.
		Section 6.2	POINT is added.
		Chapter 5	Partially changed.
		Chapter 8	The structure of chapters is changed.
		Section 8.3	Partially added.
		Section 8.4	Partially changed.
		Section 8.5	Partially changed.
		Section 11.5.2 (3)	Partially changed.
		Section 11.5.2 (6)	Partially added.
		Section 11.8	Partially added.
		Section 11.8.3	Newly added.
		Section 11.10 (1)	Partially added.
		Section 11.16	Partially added.
		Chapter 12	Partially changed.
		Section 12.2.2	Newly added.
		Section 13.3.2	Partially changed.
		Section 14.3.3 (1) (a)	Partially added.
		Section 16.3.2 (2) (b)	Partially added.
		Section 16.3.9	Partially changed.
		Chapter 17	Newly added.
		App. 4	Partially added.
		App. 5.7.3 (2)	Partially changed.
		App. 6	Partially changed.
		App. 9.3	Newly added.
May 2016	SH(NA)030193ENG-D	Section 5.2.2	[Pr. PB52], [Pr. PB53], [Pr. PB54], and [Pr. PB55] are partially changed.
		App. 4.2.3 (2)	Partially changed.
Jun. 2016	SH(NA)030193ENG-E	PROFINET is supported.	
		Servo motors with functional safety are supported.	
		«About the manual»	Partially added.
		Section 1.1	Partially added.
		Section 1.5	Partially added.
		Section 4.3	POINT is partially added.
		Section 4.3.2 (1)	Partially added.
		Section 4.3.3	Note is added.
		Section 4.4	POINT is partially added.
		Chapter 5	POINT is partially added.

Revision Date	*Manual Number	Revision	
Jun. 2016	SH(NA)030193ENG-E	Section 5.2	POINT is partially added.
			Partially added.
		Section 6.2.3	Partially added.
		Section 17.1	POINT is added.
		Section 17.2.1	Partially added.
		Section 17.2.4	POINT is partially deleted.
		App. 4	Partially changed.
Dec. 2017	SH(NA)030193ENG-F	The point table method and the indexer method are supported.	
		3. To prevent injury, note the following	Partially changed.
		4. Additional instructions	Partially changed.
		EEP-ROM life	Partially added.
		Section 1.1	Partially changed.
		Section 1.4	Partially changed.
		Section 1.5	Partially added.
		Section 1.8	Partially changed.
		Chapter 2	CAUTION is partially changed.
		Chapter 3	CAUTION is partially changed.
		Section 3.3.3	POINT is partially added.
		Section 3.5.1	Partially added.
		Section 3.5.2	Partially added.
		Section 3.6	POINT is partially added.
		Section 3.7.1	POINT is partially added.
		Chapter 4	WARNING and CAUTION are partially added.
		Section 4.1	POINT is added.
		Section 4.2	Partially added.
		Section 4.3.3	Partially added.
		Section 4.5	Partially added.
		Section 4.5.1	Partially added.
		Chapter 5	CAUTION is partially changed.
		Section 5.1.1	Partially changed.
		Section 5.1.3	Partially added.
		Section 5.1.8	Partially added.
		Section 5.2.1	Partially changed.
		Section 5.2.2	Partially changed.
		Section 5.2.3	Partially added.
		Section 5.2.4	Partially changed.
		Section 5.2.5	Partially changed.
		Section 5.2.8	Partially added.
		Section 5.4.1	Partially changed.
		Section 5.4.2	Newly added.
		Chapter 6	POINT is partially added.
		Section 6.2	POINT is partially added.
		Section 6.2.2	Partially changed.
		Section 7.1.5	POINT is partially added.
		Section 8.2	Partially added.
		Section 8.3	Partially added.
		Section 8.4.1	Partially added.
		Section 8.4.2	Partially changed.
		Section 8.6	Newly added.
		Section 10.1	Partially changed.
		Section 10.3	CAUTION is added.
		Section 11.1.1	Partially changed.
		Section 11.1.3	Partially changed.
		Section 11.2.4	Partially added.

Revision Date	*Manual Number	Revision	
Dec. 2017	SH(NA)030193ENG-F	Section 11.7.1	Partially changed.
		Section 11.7.2	Partially changed.
		Section 11.10	Partially added.
		Section 11.17	Partially added.
		Section 13.3.3	Partially changed.
		Section 14.1.1	Partially added.
		Section 14.2	CAUTION is partially changed.
		Section 14.3.4	Partially added.
		Section 15.2	CAUTION is partially changed.
		Section 15.4.1	Partially added.
		Section 15.4.2	Partially added.
		Section 15.4.3	Partially added.
		Section 16.3.7	Partially added.
		Section 17.2.4	Partially added.
		Chapter 18	Newly added.
		Chapter 19	Newly added.
		App. 2	Partially changed.
		App. 4	Partially changed.
		App. 6	Partially changed.
		App. 8	Partially added.

This manual confers no industrial property rights or any rights of any other kind, nor does it confer any patent licenses. Mitsubishi Electric Corporation cannot be held responsible for any problems involving industrial property rights which may occur as a result of using the contents noted in this manual.

© 2015 MITSUBISHI ELECTRIC CORPORATION

MELSERVO is a trademark or registered trademark of Mitsubishi Electric Corporation in Japan and/or other countries.
Microsoft, Windows, Internet Explorer, and Windows Vista are registered trademarks or trademarks of Microsoft Corporation in the United States, Japan, and/or other countries.
Intel, Pentium, and Celeron are trademarks of Intel Corporation in the United States and/or other countries.
EtherCAT® is registered trademark and patented technology, licensed by Beckhoff Automation GmbH, Germany.
EtherNet/IP is trademark of ODVA.
Ethernet is a registered trademark of Fuji Xerox Co., Ltd. in Japan.
All other product names and company names are trademarks or registered trademarks of their respective companies.

Warranty

1. Warranty period and coverage

We will repair any failure or defect hereinafter referred to as "failure" in our FA equipment hereinafter referred to as the "Product" arisen during warranty period at no charge due to causes for which we are responsible through the distributor from which you purchased the Product or our service provider. However, we will charge the actual cost of dispatching our engineer for an on-site repair work on request by customer in Japan or overseas countries. We are not responsible for any on-site readjustment and/or trial run that may be required after a defective unit are repaired or replaced.

[Term]

The term of warranty for Product is twelve (12) months after your purchase or delivery of the Product to a place designated by you or eighteen (18) months from the date of manufacture whichever comes first ("Warranty Period"). Warranty period for repaired Product cannot exceed beyond the original warranty period before any repair work.

[Limitations]

(1) You are requested to conduct an initial failure diagnosis by yourself, as a general rule.
It can also be carried out by us or our service company upon your request and the actual cost will be charged. However, it will not be charged if we are responsible for the cause of the failure.

(2) This limited warranty applies only when the condition, method, environment, etc. of use are in compliance with the terms and conditions and instructions that are set forth in the instruction manual and user manual for the Product and the caution label affixed to the Product.

(3) Even during the term of warranty, the repair cost will be charged on you in the following cases;
(i) a failure caused by your improper storing or handling, carelessness or negligence, etc., and a failure caused by your hardware or software problem
(ii) a failure caused by any alteration, etc. to the Product made on your side without our approval
(iii) a failure which may be regarded as avoidable, if your equipment in which the Product is incorporated is equipped with a safety device required by applicable laws and has any function or structure considered to be indispensable according to a common sense in the industry
(iv) a failure which may be regarded as avoidable if consumable parts designated in the instruction manual, etc. are duly maintained and replaced
(v) any replacement of consumable parts (battery, fan, smoothing capacitor, etc.)
(vi) a failure caused by external factors such as inevitable accidents, including without limitation fire and abnormal fluctuation of voltage, and acts of God, including without limitation earthquake, lightning and natural disasters
(vii) a failure generated by an unforeseeable cause with a scientific technology that was not available at the time of the shipment of the Product from our company
(viii) any other failures which we are not responsible for or which you acknowledge we are not responsible for

2. Term of warranty after the stop of production

(1) We may accept the repair at charge for another seven (7) years after the production of the product is discontinued. The announcement of the stop of production for each model can be seen in our Sales and Service, etc.

(2) Please note that the Product (including its spare parts) cannot be ordered after its stop of production.

3. Service in overseas countries

Our regional FA Center in overseas countries will accept the repair work of the Product. However, the terms and conditions of the repair work may differ depending on each FA Center. Please ask your local FA center for details.

4. Exclusion of loss in opportunity and secondary loss from warranty liability

Regardless of the gratis warranty term, Mitsubishi shall not be liable for compensation to:
(1) Damages caused by any cause found not to be the responsibility of Mitsubishi.
(2) Loss in opportunity, lost profits incurred to the user by Failures of Mitsubishi products.
(3) Special damages and secondary damages whether foreseeable or not, compensation for accidents, and compensation for damages to products other than Mitsubishi products.
(4) Replacement by the user, maintenance of on-site equipment, start-up test run and other tasks.

5. Change of Product specifications

Specifications listed in our catalogs, manuals or technical documents may be changed without notice.

6. Application and use of the Product

(1) For the use of our General-Purpose AC Servo, its applications should be those that may not result in a serious damage even if any failure or malfunction occurs in General-Purpose AC Servo, and a backup or fail-safe function should operate on an external system to General-Purpose AC Servo when any failure or malfunction occurs.

(2) Our General-Purpose AC Servo is designed and manufactured as a general purpose product for use at general industries.
Therefore, applications substantially influential on the public interest for such as atomic power plants and other power plants of electric power companies, and also which require a special quality assurance system, including applications for railway companies and government or public offices are not recommended, and we assume no responsibility for any failure caused by these applications when used
In addition, applications which may be substantially influential to human lives or properties for such as airlines, medical treatments, railway service, incineration and fuel systems, man-operated material handling equipment, entertainment machines, safety machines, etc. are not recommended, and we assume no responsibility for any failure caused by these applications when used.
We will review the acceptability of the abovementioned applications, if you agree not to require a specific quality for a specific application. Please contact us for consultation.

MODEL	
MODEL CODE	

MITSUBISHI ELECTRIC CORPORATION

HEAD OFFICE: TOKYO BLDG MARUNOUCHI TOKYO 100-8310

SH(NA)030193ENG-F(1712)MEE Printed in Japan

This Instruction Manual uses recycled paper.
Specifications are subject to change without notice.