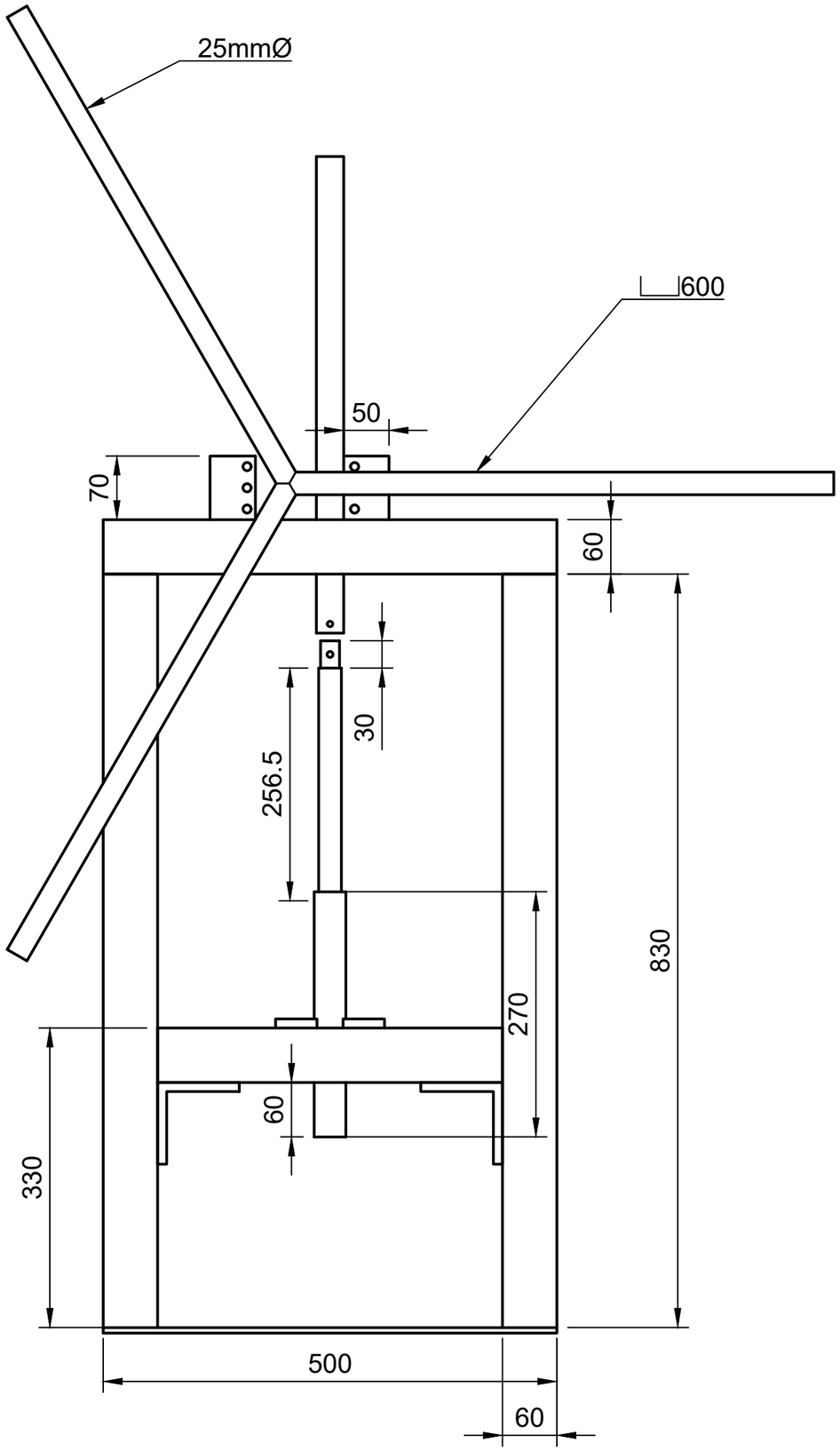

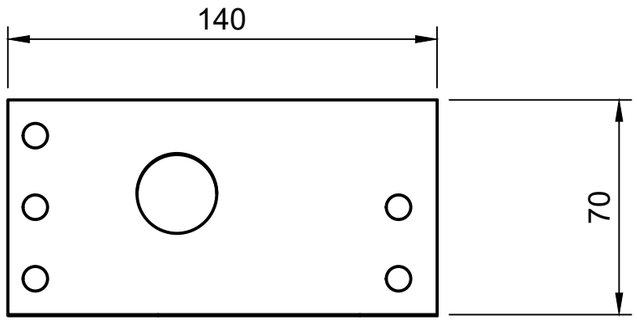

Gear - Bracket

Dept.	Technical reference	Created by Guenter Baumgart 04/04/2019	Approved by	
		Document type	Document status	
		Title arbor press v14	DWG No.	
			Rev. / Date of issue	Sheet 1/1