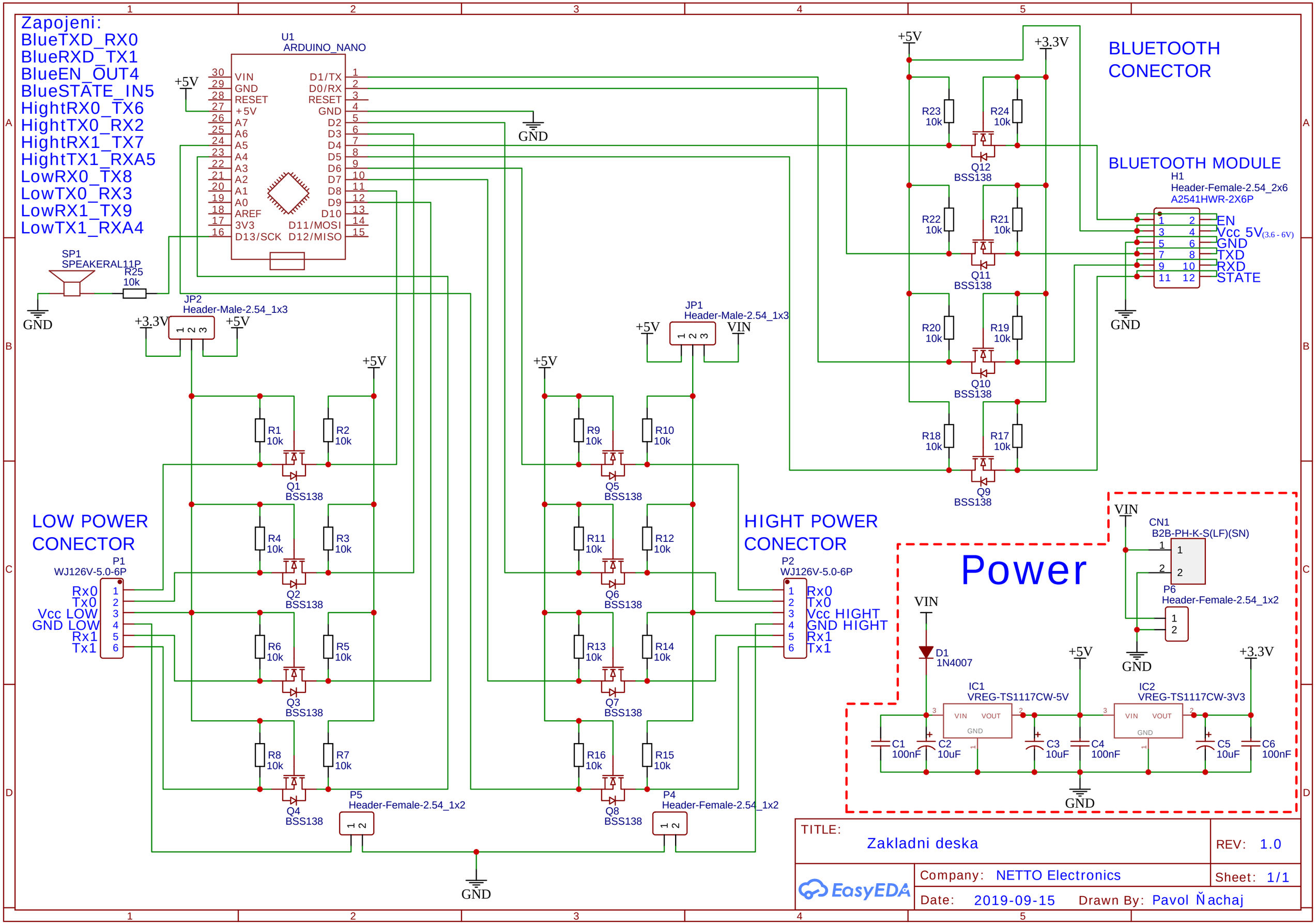
Zapojeni:
BlueTXD_RX0
BlueRXD_TX1
BlueEN_OUT4
BlueSTATE_IN5
HightRX0_TX6
HightTX0_RX2
HightRX1_TX7
HightTX1_RXA5
LowRX0_TX8
LowTX0_RX3
LowRX1_TX9
LowTX1_RXA4
U1
ARDUINO_NANO
VIN
GND
RESET
+5V
A7
A6
A5
A4
A3
A2
A1
A0
AREF
3V3
D13/SCK
D1/TX
D0/RX
RESET
GND
D2
D3
D4
D5
D6
D7
D8
D9
D10
D11/MOSI
D12/MISO
SP1
SPEAKERAL11P
R25
10k
JP2
Header-Male-2.54_1x3
+3.3V
JP1
Header-Male-2.54_1x3
VIN
LOW POWER
CONECTOR
P1
WJ126V-5.0-6P
Rx0
Tx0
Vcc LOW
GND LOW
Rx1
Tx1
HIGHT POWER
CONECTOR
P2
WJ126V-5.0-6P
Rx0
Tx0
Vcc HIGHT
GND HIGHT
Rx1
Tx1
P5
Header-Female-2.54_1x2
P4
Header-Female-2.54_1x2
BLUETOOTH
CONECTOR
BLUETOOTH MODULE
H1
Header-Female-2.54_2x6
A2541HWR-2X6P
EN
Vcc 5V(3.6 - 6V)
GND
TXD
RXD
STATE
Q1
BSS138
Q2
BSS138
Q3
BSS138
Q4
BSS138
Q5
BSS138
Q6
BSS138
Q7
BSS138
Q8
BSS138
Q9
BSS138
Q10
BSS138
Q11
BSS138
Q12
BSS138
Power
CN1
B2B-PH-K-S(LF)(SN)
P6
Header-Female-2.54_1x2
D1
1N4007
IC1
VREG-TS1117CW-5V
IC2
VREG-TS1117CW-3V3
VIN
VOUT
C1
100nF
C2
10uF
C3
10uF
C4
100nF
C5
10uF
C6
100nF
TITLE:
Zakladni deska
REV: 1.0
Company: NETTO Electronics
Sheet: 1/1
Date: 2019-09-15
Drawn By: Pavol Ňachaj
EasyEDA