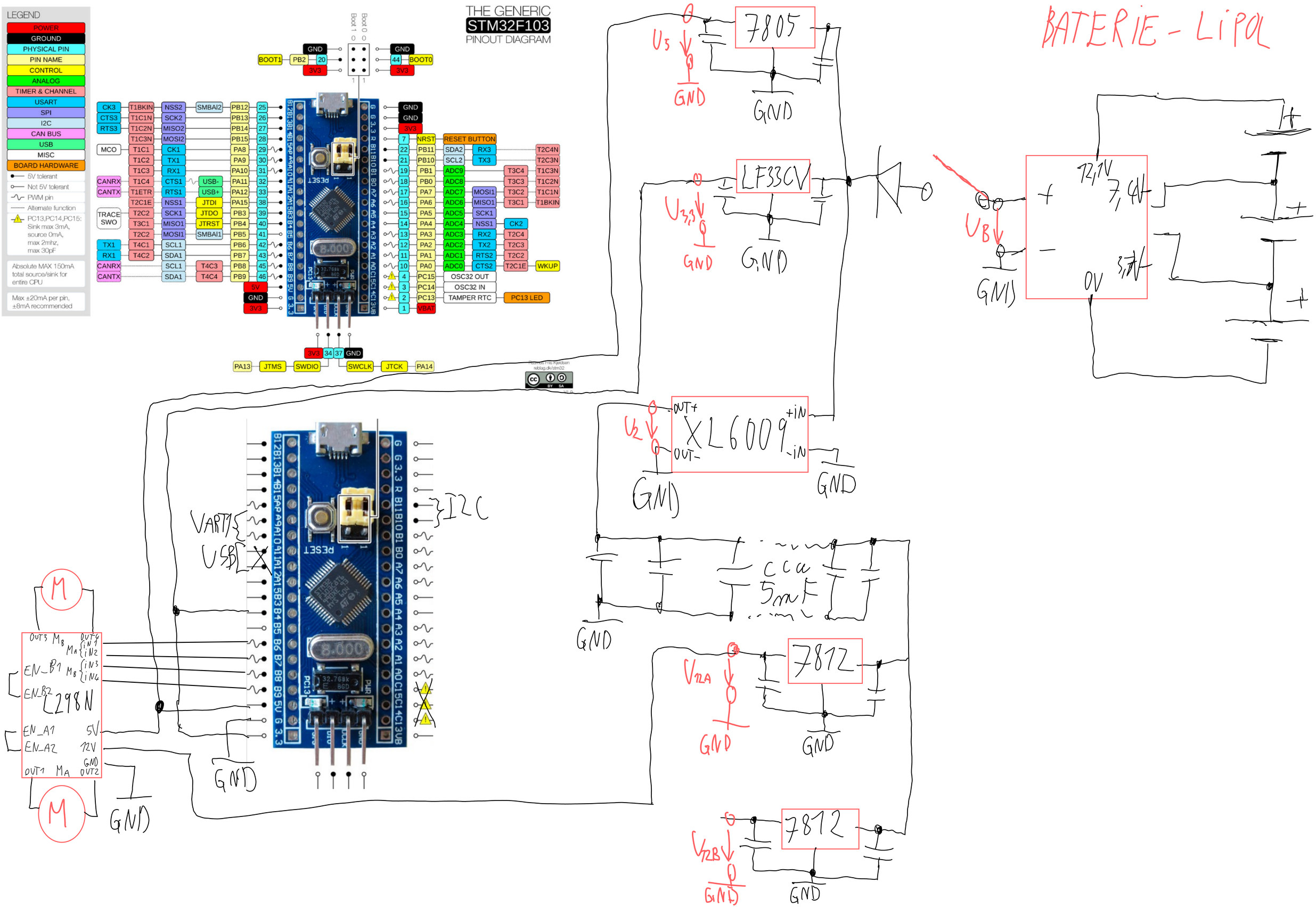
THE GENERIC
STM32F103
PINOUT DIAGRAM
LEGEND
POWER
GROUND
PHYSICAL PIN
PIN NAME
CONTROL
ANALOG
TIMER & CHANNEL
USART
SPI
I2C
CAN BUS
USB
MISC
BOARD HARDWARE
5V tolerant
Not 5V tolerant
PWM pin
Alternate function
PC13,PC14,PC15: Sink max 3mA, source 0mA, max 2mhz, max 30pF
Absolute MAX 150mA total source/sink for entire CPU
Max ±20mA per pin, ±8mA recommended
RESET BUTTON
OSC32 OUT
OSC32 IN
TAMPER RTC
PC13 LED
7805
LF33CV
BATERIE - LiPOL
XL6009
CCW 5mF
7812
7812
L298N
M
M
I2C
VART7
USB
GND