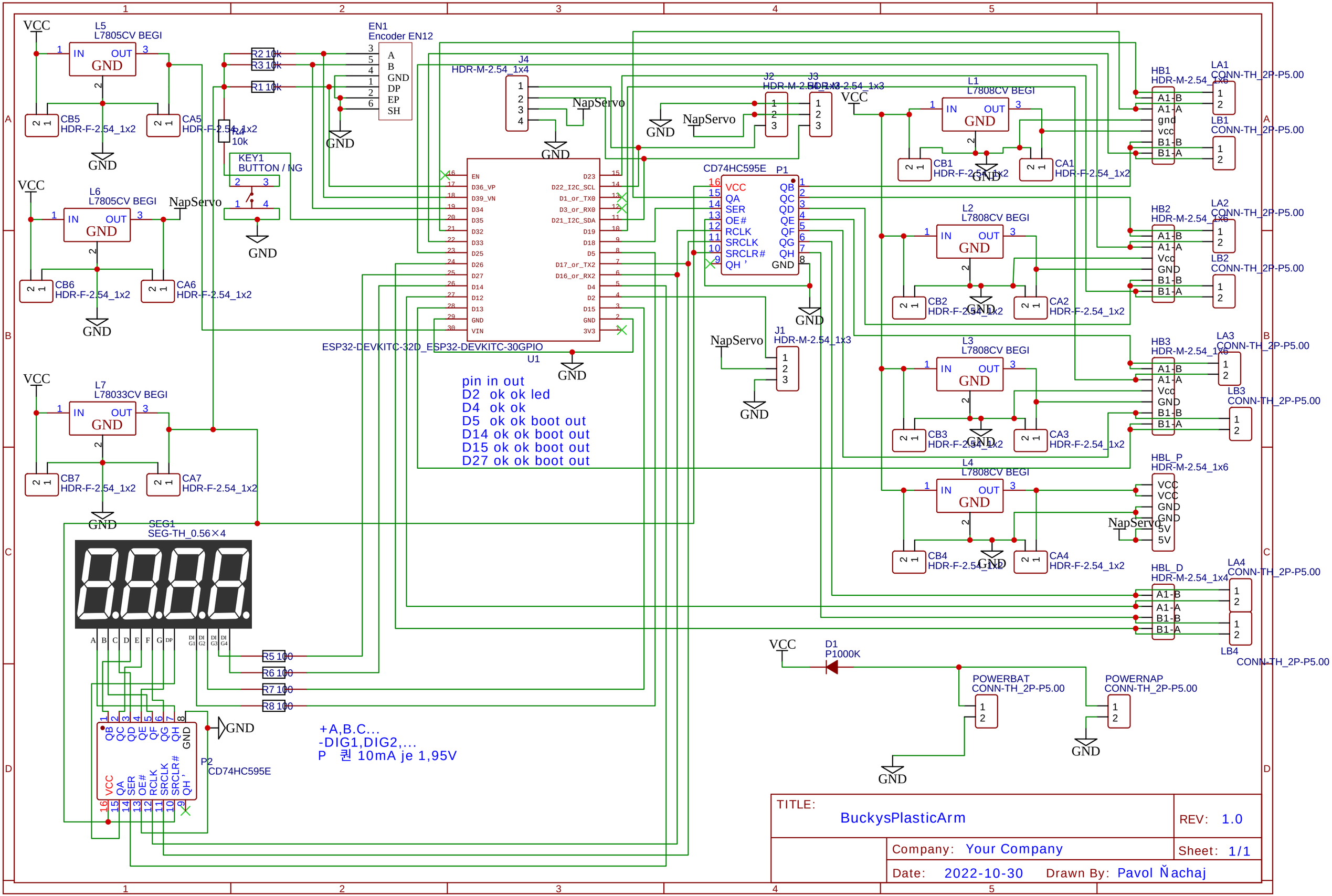
L5
L7805CV BEGI
L6
L7805CV BEGI
L7
L78033CV BEGI
CB5
HDR-F-2.54_1x2
CA5
HDR-F-2.54_1x2
CB6
HDR-F-2.54_1x2
CA6
HDR-F-2.54_1x2
CB7
HDR-F-2.54_1x2
CA7
HDR-F-2.54_1x2
EN1
Encoder EN12
R2 10k
R3 10k
R1 10k
R4 10k
KEY1
BUTTON / NG
J4
HDR-M-2.54_1x4
J2
HDR-M-2.54_1x3
J3
HDR-M-2.54_1x3
J1
HDR-M-2.54_1x3
ESP32-DEVKITC-32D_ESP32-DEVKITC-30GPIO
U1
CD74HC595E
P1
L1
L7808CV BEGI
L2
L7808CV BEGI
L3
L7808CV BEGI
L4
L7808CV BEGI
CB1
HDR-F-2.54_1x2
CA1
HDR-F-2.54_1x2
CB2
HDR-F-2.54_1x2
CA2
HDR-F-2.54_1x2
CB3
HDR-F-2.54_1x2
CA3
HDR-F-2.54_1x2
CB4
HDR-F-2.54_1x2
CA4
HDR-F-2.54_1x2
HB1
HDR-M-2.54_1x6
HB2
HDR-M-2.54_1x6
HB3
HDR-M-2.54_1x6
HBL_P
HDR-M-2.54_1x6
HBL_D
HDR-M-2.54_1x4
LA1
CONN-TH_2P-P5.00
LB1
CONN-TH_2P-P5.00
LA2
CONN-TH_2P-P5.00
LB2
CONN-TH_2P-P5.00
LA3
CONN-TH_2P-P5.00
LB3
CONN-TH_2P-P5.00
LA4
CONN-TH_2P-P5.00
LB4
CONN-TH_2P-P5.00
D1
P1000K
POWERBAT
CONN-TH_2P-P5.00
POWERNAP
CONN-TH_2P-P5.00
SEG1
SEG-TH_0.56×4
R5 100
R6 100
R7 100
R8 100
P2
CD74HC595E
+A,B.C...
-DIG1,DIG2,...
P 권 10mA je 1,95V
pin in out
D2 ok ok led
D4 ok ok
D5 ok ok boot out
D14 ok ok boot out
D15 ok ok boot out
D27 ok ok boot out
VCC
GND
NapServo
TITLE:
BuckysPlasticArm
REV: 1.0
Company: Your Company
Sheet: 1/1
Date: 2022-10-30
Drawn By: Pavol Ňachaj