MCU

File: mcu.kicad_sch

Dial

File: dial.kicad_sch

Power

File: power.kicad_sch

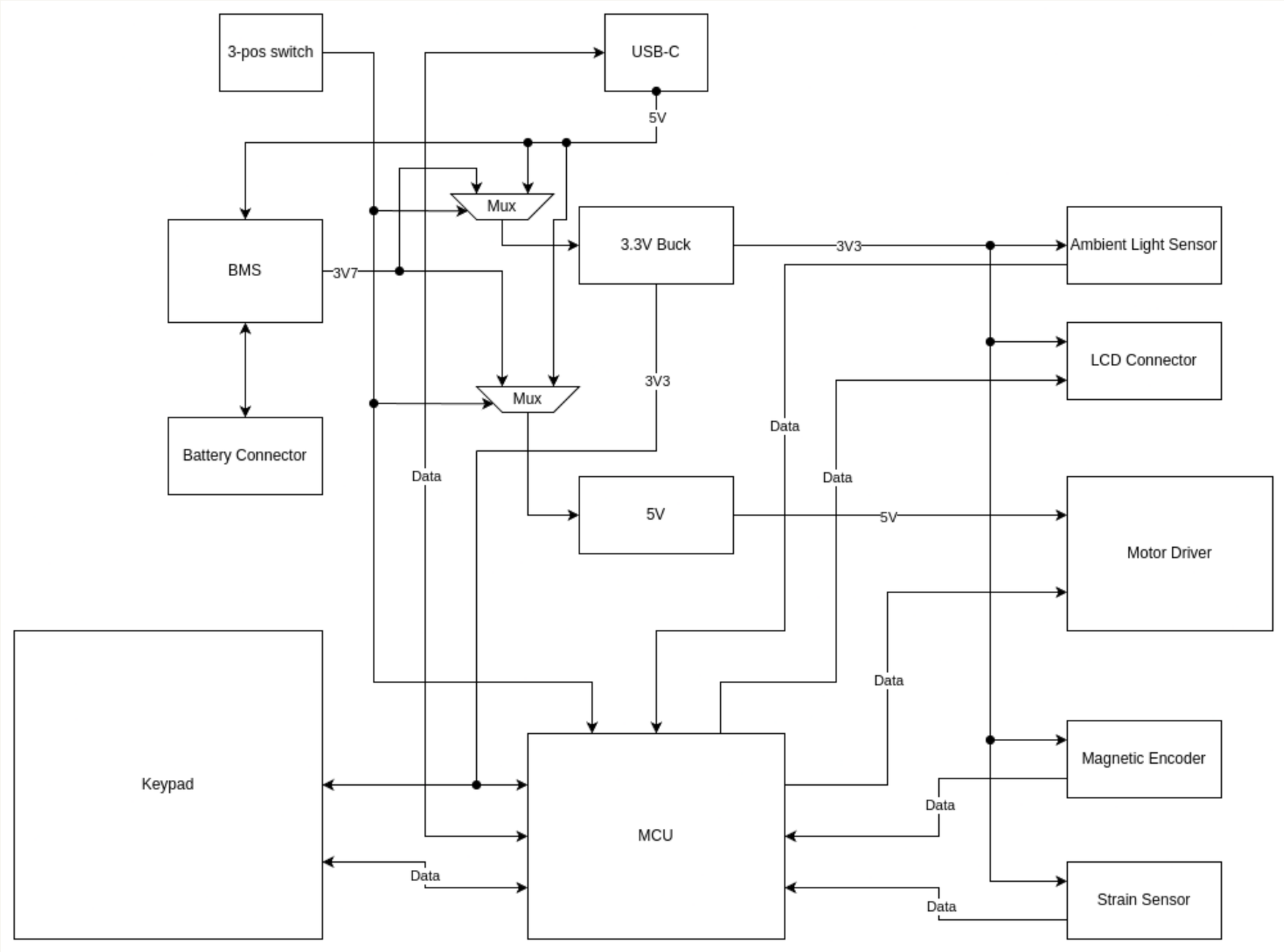


Biro 1

**Biro**

Sheet: /

File: biro-1-rev-0.kicad_sch

***Title: Block Diagram***

| | | |
|---|---|---|
| Size: C | Date: 2025-03-28 | **Rev: 0** |
| KiCad E.D.A. 8.0.9 | | Id: 1/4 |

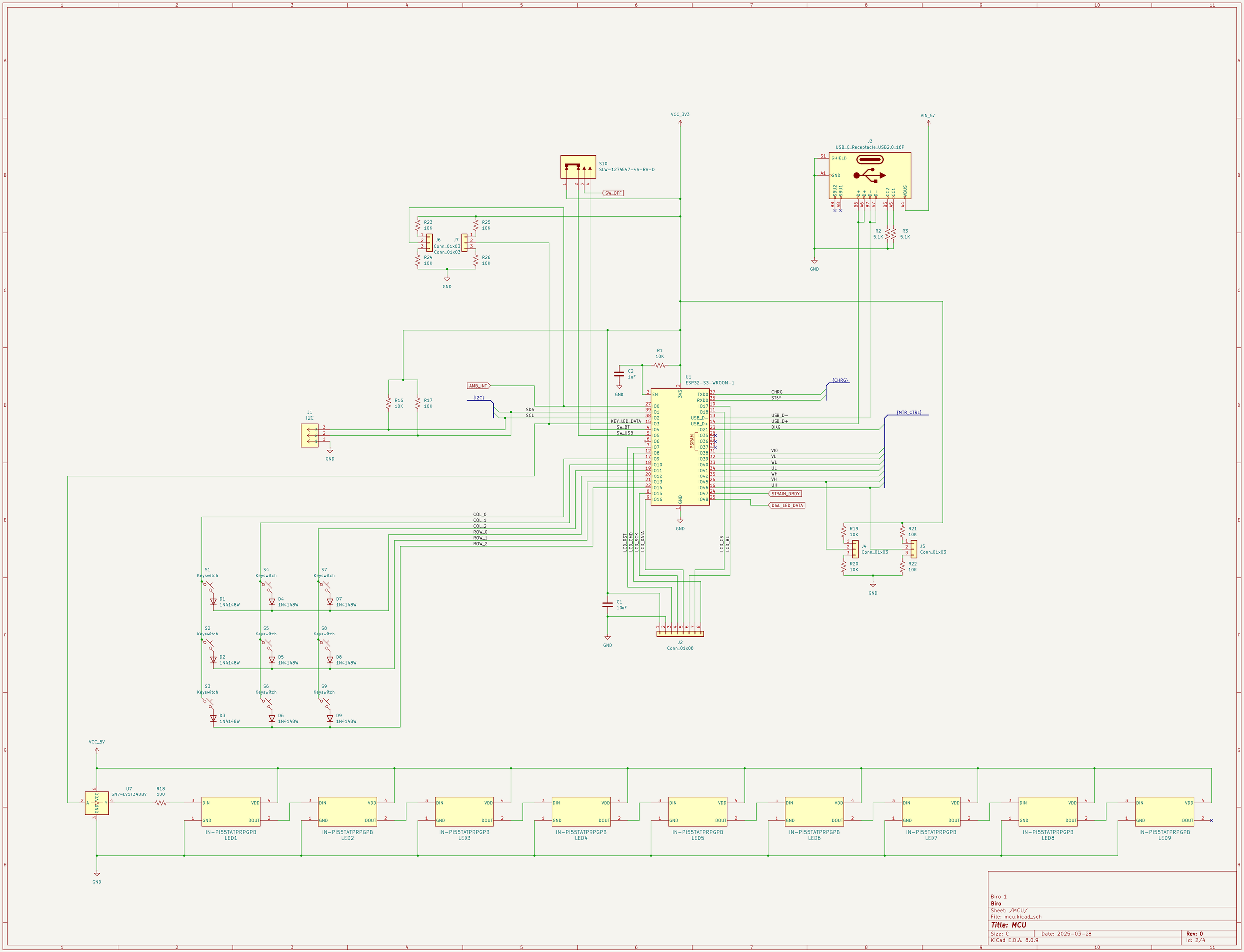


Biro 1
**Biro**
Sheet: /MCU/
File: mcu.kicad_sch

***Title: MCU***

| | | |
|---|---|---|
| Size: C | Date: 2025-03-28 | **Rev: 0** |
| KiCad E.D.A. 8.0.9 | | Id: 2/4 |

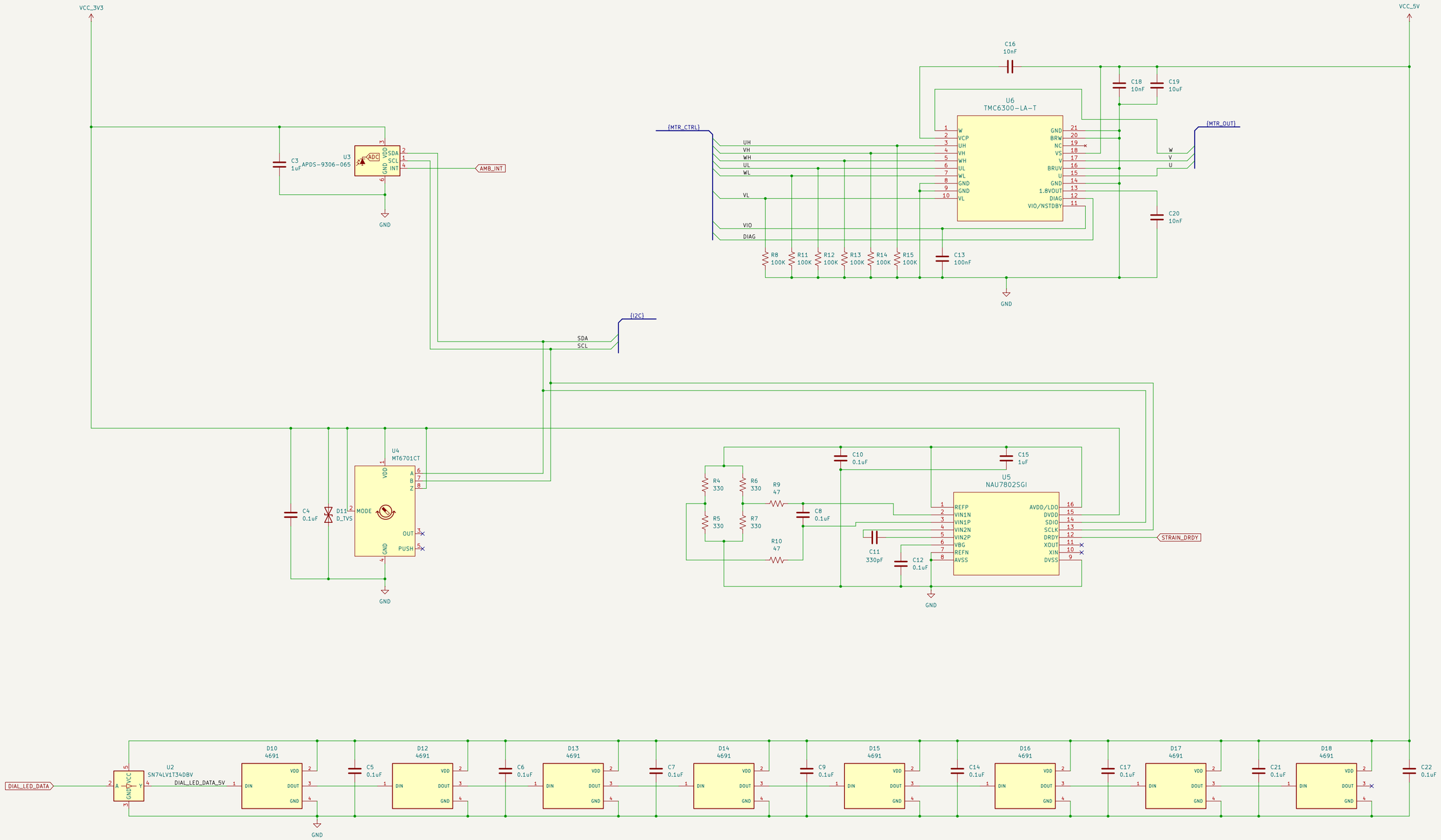


Biro 1
**Biro**
Sheet: /Dial/
File: dial.kicad_sch

***Title: Dial***

| | | |
|---|---|---|
| Size: C | Date: 2025-03-28 | **Rev: 0** |
| KiCad E.D.A. 8.0.9 | | Id: 3/4 |

Biro 1
**Biro**
Sheet: /Power/
File: power.kicad_sch

***Title: Power***

| | | |
|---|---|---|
| Size: C | Date: 2025-03-28 | **Rev: 0** |
| KiCad E.D.A. 8.0.9 | | Id: 4/4 |