MCU

File: mcu.kicad_sch

Dial

File: dial.kicad_sch

Power

File: power.kicad_sch

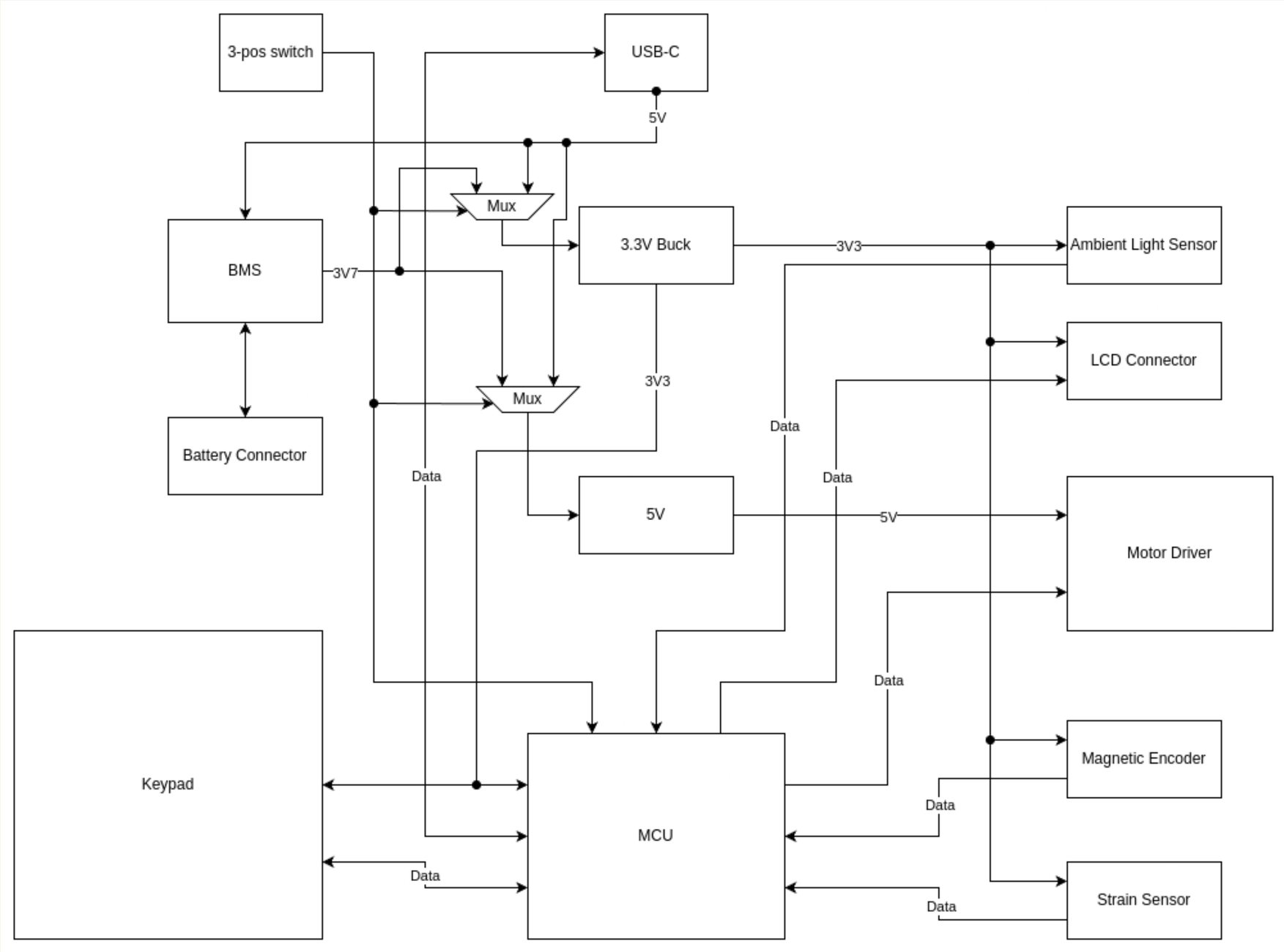

Ozayr Raazi
Biro 1
Biro
Sheet: /
File: biro-1-rev-0.kicad_sch

Title: Block Diagram

Size: C	Date: 2025-05-18	**Rev: 0**
KiCad E.D.A. 9.0.2		Id: 1/4

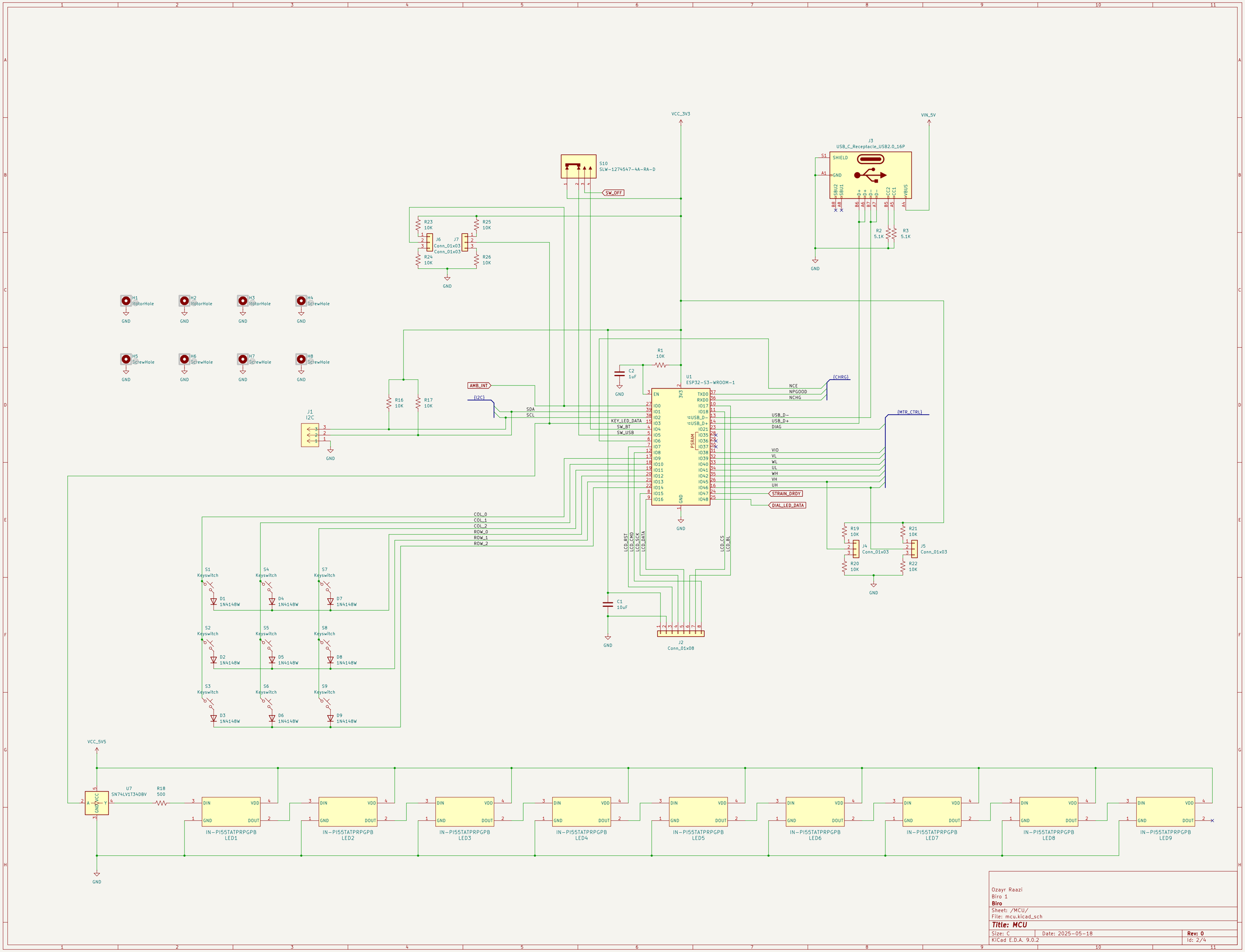

Ozayr Raazi
Biro 1
Biro
Sheet: /MCU/
File: mcu.kicad_sch

Title: MCU

Size: C	Date: 2025-05-18	**Rev: 0**
KiCad E.D.A. 9.0.2		Id: 2/4

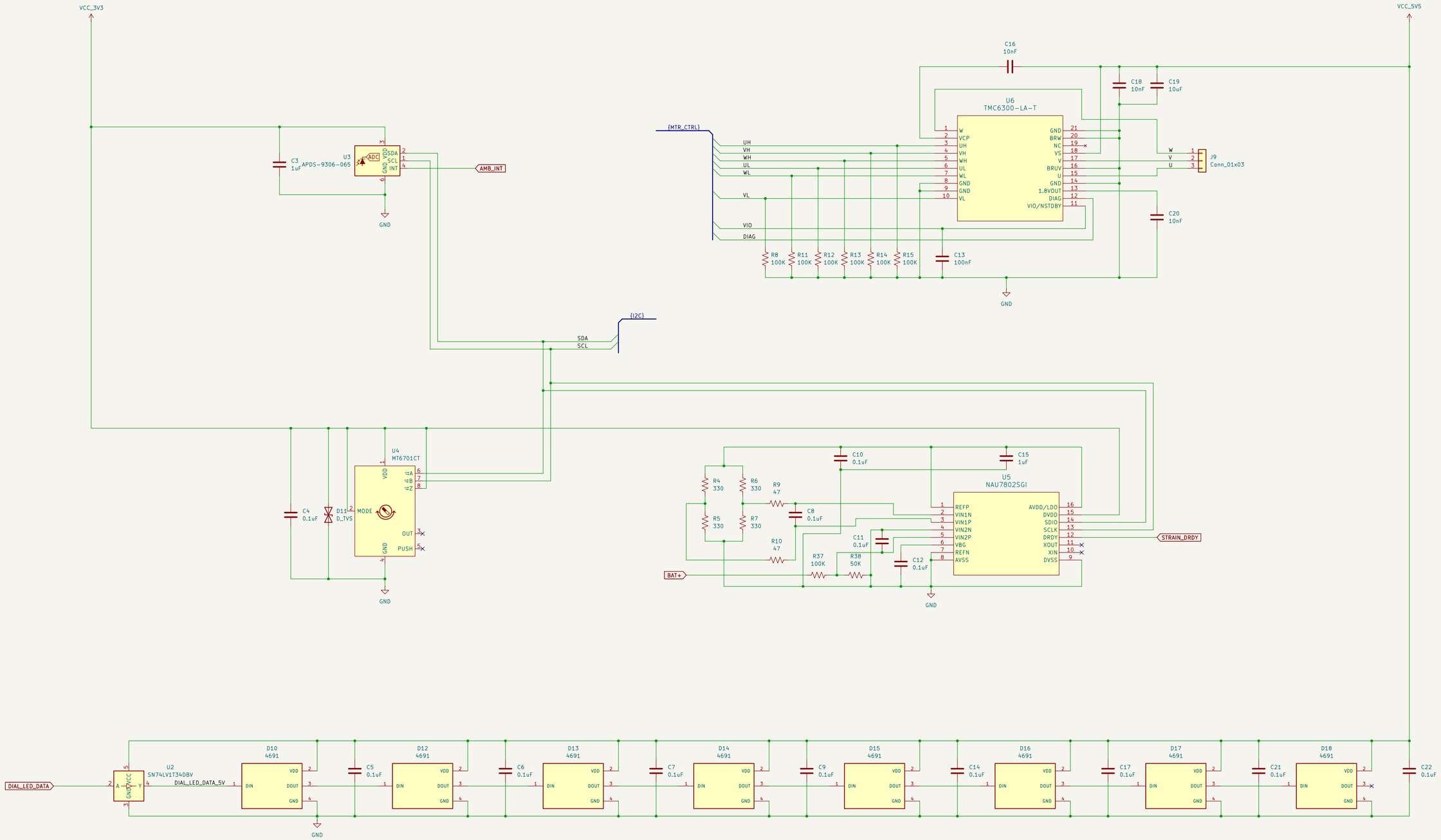

Ozayr Raazi
Biro 1
Biro
Sheet: /Dial/
File: dial.kicad_sch

Title: Dial

Size: C	Date: 2025-05-18	**Rev: 0**
KiCad E.D.A. 9.0.2		Id: 3/4

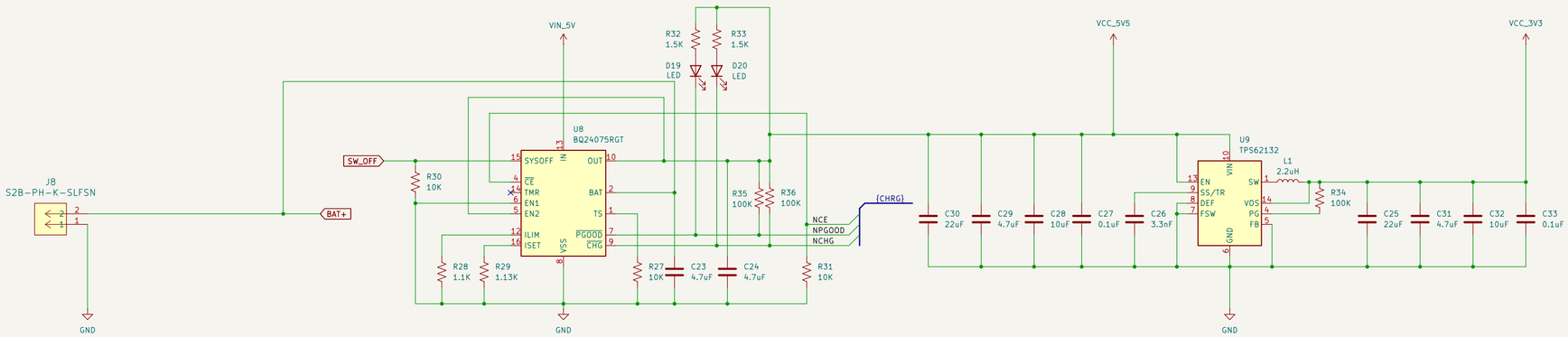

Ozayr Raazi
Biro 1
Biro

Sheet: /Power/
File: power.kicad_sch

Title: Power

Size: C	Date: 2025-05-18	**Rev: 0**
KiCad E.D.A. 9.0.2		Id: 4/4