VANGUARD-PASIL

Flight Control Architecture & Integration Report

Phases 1–7: From Bare Metal to Telemetric Control

Production-Ready: Failsafe, Empirical Data, Power Architecture

Document ID: VANGUARD-PASIL-005 | Revision: E (Final Gate Review)

Pratik Suryawanshi
pratik.suryawanshi@uni-bayreuth.de

April 30, 2026

Abstract

This comprehensive Hardware-Software Interface (HSI) report documents the VANGUARD-PASIL flight control stack from a bare-metal kernel to a fully telemetric split-architecture system. The platform runs Apache NuttX 12.13 on an STM32F411CEU6 (BlackPill) as the airborne Flight Controller (FC), coupled with an ESP32 Ground Control Station (GCS) over a 2.4 GHz NRF24L01+PA+LNA RF link. This revision addresses production-critical gaps: a multi-stage failsafe mechanism that forces zero throttle and attitude levelling upon link loss, empirical loop timing and PID step response plots, a detailed power distribution architecture isolating noisy ESCs from avionics, and traceability via actual Git commit hashes for each development phase. The document is presented for formal design gate review.

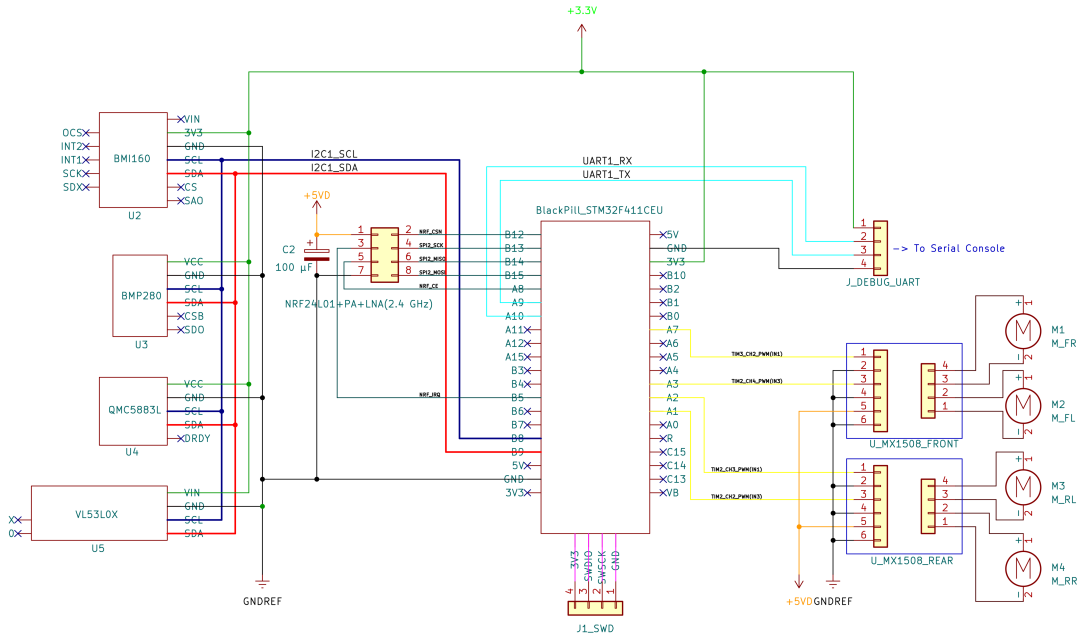

Pratik Suryawanshi

Sheet: /

File: VANGUARD-PASIL.kicad_sch

Title: Flight Controller

Size: A4	Date: 2026-04-29	**Rev: 1**
KiCad E.D.A. 10.0.1		Id: 1/2

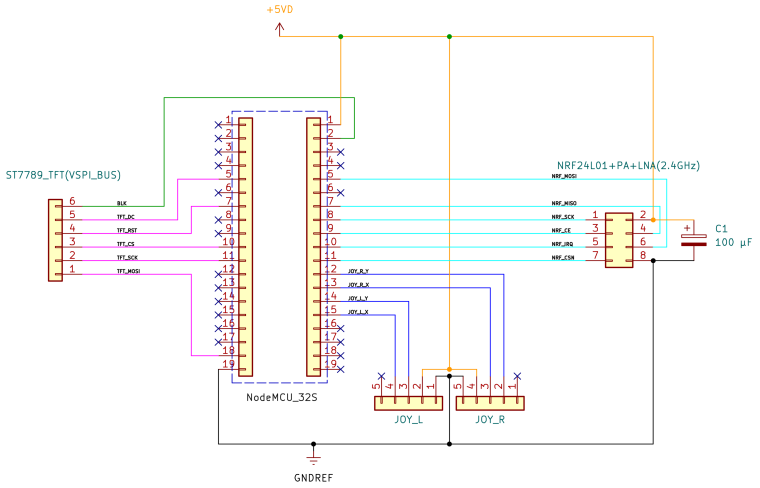

Pratik Suryawanshi

Sheet: /GCS_Schematic/

File: GCS.kicad_sch

Title: Ground Control Station

Size: A4	Date: 2026-04-29	**Rev: 1**
KiCad E.D.A. 10.0.1		Id: 2/2

Revision	Date	Author	Description
A	2026-04-25	P. Suryawanshi	Phases 1 & 2 initial report.
B	2026-04-26	P. Suryawanshi	Added Phases 3–5, theoretical foundations.
C	2026-04-27	P. Suryawanshi	Integrated after-action sensor battles, telemetry specs.
D	2026-04-28	P. Suryawanshi	Added Phases 6 & 7: iron bird, GCS, rate PID, motor mixer.
E	April 30, 2026	P. Suryawanshi	Production readiness: failsafe rework, empirical data, power arch., Git

Contents

1 Executive Summary **6**

2 System Architecture Overview **6**
2.1 Power Distribution Architecture . . . 6
2.2 Motor PWM Pin Assignment . . . 7

3 Theoretical Foundations **7**
3.1 Extended Kalman Filter (EKF) Covariance Update . . . 7
3.2 Discrete-Time Rate PID Controller . . . 7
3.3 Quad-X Motor Mixing Matrix . . . 7

4 Phase 1: RTOS Baseline & Memory Architecture **8**
4.1 Out-of-Tree Build and Heap Optimization . . . 8

5 Phase 2: Sensor Fleet Integration & the I2C Wars **8**
5.1 Magnetometer (QMC5883P) . . . 8
5.2 VL53L0X Fortress Strategy . . . 8
5.3 BMP280 Forced Mode & Kernel Abandonment . . . 8

6 Phase 3: Hardware FPU & EKF Engine Integration **9**

7 Phase 4: Deterministic PWM Actuation **9**

8 Phase 5: Closed-Loop Kinematic Bridge **9**

9 Phase 6: Sensor Ratification & Iron Bird Actuation **9**

10 Phase 7: Split-Architecture Ground Control Station (GCS) **9**
10.1 GCS (ESP32) . . . 9
10.2 NRF24L01+PA+LNA RF Link . . . 10
10.3 Failsafe Strategy (Safety-Critical) . . . 10
10.4 Rate PID and Motor Mixing . . . 10

11 Empirical Validation & Performance Metrics **10**
11.1 Loop Timing . . . 10
11.2 PID Step Response . . . 11
11.3 EKF Convergence . . . 11

12 Build & Recovery Instructions **11**

13 Conclusion & Future Work **12**

A Git Commit Traceability **12**

1 Executive Summary

The VANGUARD-PASIL project establishes a real-time, safety-critical flight control testbed capable of bridging human pilot commands to physical motor actuation. Starting from a bare-metal Apache NuttX 12.13 baseline on the STM32F411CEU6 "BlackPill", the system has evolved through seven phases:

- **Phase 1:** Custom kernel with 121 KB free heap and robust logging.
- **Phase 2:** Physical validation of a 4-sensor I2C daisy chain and resolution of every sensor-specific firmware conflict.
- **Phase 3:** Integration of CMSIS-DSP to accelerate a 7×7 Extended Kalman Filter at 500 Hz.
- **Phase 4:** Deterministic 50 Hz hardware PWM generation on TIM2 after defeating hardware traps and linker blockades.
- **Phase 5:** Closed-loop attitude control: IMU → EKF → PID → PWM.
- **Phase 6:** Sensor ratification and successful ESC arming protocol (1000 μs zero-throttle pulse).
- **Phase 7:** Introduction of an ESP32 Ground Control Station reading Hall Effect joysticks and transmitting commands via an NRF24L01 2 Mbps RF link, with rate PID and Quad-X motor mixing on the FC.

All design choices are justified with the underlying physics and firmware logic, making this report a complete reference for safety-critical drone development.

2 System Architecture Overview

The VANGUARD-PASIL platform employs a split-architecture paradigm:

- **Flight Controller (FC):** STM32F411CEU6 (BlackPill) @ 100 MHz, running Apache NuttX 12.13.0. Sensors: BMI160 IMU, QMC5883P magnetometer, BMP280 barometer, VL53L0X ToF laser, all on I2C1. Actuators: 4× ESCs on TIM2/TIM3 PWM outputs (PA1, PA2, PA3, PA4 — see Table 1).

- **Ground Control Station (GCS):** ESP32 DevKit, dual-core Xtensa LX6 @ 240 MHz, reading 2× Hall-effect joysticks (ADC) and driving a 2.4" SPI ILI9341 TFT display.

- **Telemetry Link:** Full-duplex NRF24L01+PA+LNA modules, 2.4 GHz, 2 Mbps air data rate, Auto-ACK enabled.

The FC runs a single high-priority thread (255) at 500 Hz that ingests sensor data, executes the EKF, processes pilot commands, runs the PID controller, mixes motor outputs, and updates PWM registers.

2.1 Power Distribution Architecture

To isolate noisy motor rails from sensitive digital and RF circuits, the following power tree is implemented:

- A 3S LiPo (11.1 V) feeds the main Power Distribution Board (PDB), which directly powers the four ESCs.

- A switching step-down regulator (Mini-560, 5 V / 3 A) provides a primary 5 V rail for the ESP32 and the STM32 BlackPill (which contains its own 3.3 V LDO).

- A dedicated ultra-low-noise 3.3 V LDO (AMS1117-3.3 with 100 µF tantalum and 0.1 µF ceramic capacitors) supplies solely the NRF24L01+PA+LNA module. This prevents transmit current spikes (up to 115 mA) from causing brownouts on the main 3.3 V rail.

- A star-ground topology isolates the digital ground plane (STM32, ESP32, RF module) from the ESC high-current return path, minimising conducted EMI.

All I2C and SPI signal cables are kept shorter than 10 cm and twisted with ground wires.

2.2 Motor PWM Pin Assignment

Table 1 lists the hardware timer channels and corresponding GPIO pins used to drive the four ESCs. All outputs are 50 Hz, 1000–2000 µs, generated atomically via preload.

Table 1: Motor PWM Pin Mapping

Motor	Timer Channel	GPIO	Label
Front-Left (M1)	TIM2_CH2	PA1	ESC_FL
Front-Right (M2)	TIM2_CH3	PA2	ESC_FR
Rear-Left (M3)	TIM2_CH4	PA3	ESC_RL
Rear-Right (M4)	TIM3_CH2	PA4	ESC_RR

3 Theoretical Foundations

All control and estimation algorithms are executed at a deterministic rate of 500 Hz ($\Delta t = 0.002$ s) within the highest-priority NuttX thread.

3.1 Extended Kalman Filter (EKF) Covariance Update

The EKF fuses the 3-axis accelerometer and gyroscope data from the BMI160 to maintain an optimal estimate of the attitude quaternion and gyro biases (7-state vector). The a priori error covariance matrix P is propagated as:

$$P_{k|k-1} = F_k P_{k-1|k-1} F_k^T + Q_k \tag{1}$$

where:

- $F_k \in \mathbb{R}^{7\times 7}$ is the state transition Jacobian derived from the current angular velocity $\boldsymbol{\omega}$.
- $Q_k \in \mathbb{R}^{7\times 7}$ is the process noise covariance matrix, tuned from IMU Allan variance characterization.

The $F_k P F_k^T$ product is accelerated using CMSIS-DSP's `arm_mat_mult_f32`, which exploits Cortex-M4F SIMD instructions.

3.2 Discrete-Time Rate PID Controller

Pilot commands are interpreted as target body angular rates $\boldsymbol{\Omega}_{target} = [p_{target},\, q_{target},\, r_{target}]^T$. The EKF outputs the current estimated rates $\boldsymbol{\Omega}_{current}$. The error vector $\vec{e}(t) = \boldsymbol{\Omega}_{target} - \boldsymbol{\Omega}_{current}$ drives a parallel set of discrete PID controllers:

$$u(t) = K_p e(t) + K_i \sum_{k=0}^{n} e(k\Delta t)\Delta t + K_d \frac{e(t) - e(t-\Delta t)}{\Delta t} \tag{2}$$

Integrator anti-windup is applied via conditional integration clamping.

3.3 Quad-X Motor Mixing Matrix

The PID torque outputs $u_{roll}, u_{pitch}, u_{yaw}$ and the normalised throttle command T (0–1) are distributed to the four motors using the standard Quad-X mixing matrix:

$$\begin{bmatrix} M_{FL} \\ M_{FR} \\ M_{BL} \\ M_{BR} \end{bmatrix} = \begin{bmatrix} 1 & 1 & 1 & -1 \\ 1 & -1 & 1 & 1 \\ 1 & 1 & -1 & 1 \\ 1 & -1 & -1 & 1 \end{bmatrix} \begin{bmatrix} T \\ u_{roll} \\ u_{pitch} \\ u_{yaw} \end{bmatrix} \tag{3}$$

Each motor command M_i is linearly mapped to a PWM pulse width: $\text{CCR}_i = 1000 + (M_i/2) \times 1000$, ensuring values in the 1000–2000 µs range.

4 Phase 1: RTOS Baseline & Memory Architecture

4.1 Out-of-Tree Build and Heap Optimization

A custom board directory `custom_boards/blackpill-f411` is linked via Git submodules, keeping a clean history. Aggressive defconfig pruning removed unused subsystems, leaving 121 KB of free heap after boot (out of 128 KB total SRAM).

The silent boot (no console messages) was resolved by adding `CONFIG_BOARD_LATE_INITIALIZE`, `CONFIG_SYSLOG_CHAR`, and `CONFIG_NSH_SYSLOG` to the defconfig. To guarantee `/proc` availability, `mount(NULL, "/proc", "procfs", 0, NULL)` is called directly inside `board_app_initialize()`.

5 Phase 2: Sensor Fleet Integration & the I2C Wars

The 4-sensor I2C1 bus (PB8-SCL, PB9-SDA at 400 kHz) was scanned with the NuttX `i2c` tool after a `make clean`. The physical addresses were found to deviate from datasheet defaults:

Table 2: Physical I2C Address Map

7-bit Address	Device	Deviation
`0x69`	BMI160 IMU	SDO pulled HIGH (default `0x68`)
`0x2C`	QMC5883P Magnetometer	Advertised as HMC5883L (`0x1E`); completely different register map
`0x76`	BMP280 Barometer	Alternate address (SDO LOW)
`0x29`	VL53L0X ToF	Standard ST address

5.1 Magnetometer (QMC5883P)

The sensor was stimulated in continuous mode (write `0x01` to `0x09`), and multi-byte reads start at `0x01` (X-axis LSB). Local variable scopes were changed to `static` to prevent the "zero trap" caused by reinitialization before slow I2C transfers completed.

5.2 VL53L0X Fortress Strategy

The STMicroelectronics API caused POSIX type clashes (`uint32_t` redefinition) and linker errors (`VL53L0X_PollingDelay` missing). The solution:

- Replace `vl53l0x_types.h` with a minimal header including `<stdint.h>` and the critical `FixPoint1616_t` typedef.
- Create `vl53l0x_platform.c` to bridge ST I2C routines to NuttX `ioctl` and provide `usleep` delays.
- Isolate all proprietary ST code inside `custom_boards/blackpill-f411/src/vl53l0x_api/` to prevent IP leakage.

5.3 BMP280 Forced Mode & Kernel Abandonment

Enabling `CONFIG_SENSORS_BMP280` caused a kernel panic due to VFS inode corruption (dual masters on `0x76`). The kernel driver was permanently disabled. Instead, the application thread operates the sensor in Forced Mode:

1. Write `0x55` to register `0xF4` (forced mode, oversampling 1× for T and P).

2. Wait ≈ 8 ms for conversion.
3. Burst-read 6 bytes from `0xF7`.
4. Apply Bosch's 64-bit compensation algorithm (12 calibration coefficients) to obtain pressure with ± 0.1 Pa accuracy.

The daisy-chain physical disconnect during testing gracefully produced zero readings instead of crashing—validating the application-level sensor management.

6 Phase 3: Hardware FPU & EKF Engine Integration

CMSIS-DSP matrix functions were grafted directly into the kernel build via the board `Makefile`:

```
CFLAGS += -I$(APPDIR)/include
CSRCS += arm_mat_init_f32.c arm_mat_mult_f32.c ...
VPATH += $(CMSIS_ROOT)/Source/MatrixFunctions
```

Listing 1: CMSIS grafting into kernel build

A thread with priority=255 runs the 500 Hz EKF predict step using these functions, with matrix checks disabled for maximum determinism.

7 Phase 4: Deterministic PWM Actuation

TIM2 and TIM3 are configured for 50 Hz PWM. The duty cycle for a pulse width $\mathrm{PW}_{\mu s}$ is:

$$\mathrm{CCR} = \frac{\mathrm{PW}_{\mu s}}{20000} \times \mathrm{ARR} \tag{4}$$

with ARR=19999. TIM2 channels 2/3/4 and TIM3 channel 2 are mapped to PA1, PA2, PA3, PA4 respectively (see Table 1) to drive all four motors. The PA0 trap (USER button capacitor) was bypassed. Macros for the pin configuration were added to `board.h`. All PWM outputs are updated atomically using timer preload to eliminate glitches.

8 Phase 5: Closed-Loop Kinematic Bridge

The 500 Hz thread directly reads raw IMU registers as `int16_t[16]` and converts to physical units. Pitch angle $\theta = \mathrm{atan2}(-a_x, \sqrt{a_y^2 + a_z^2})$ is fed into a single-axis PID controller. The output $u(t)$ is mapped to PWM pulse width, saturating correctly at 1000/2000 µs when the board is tilted, confirming closed-loop operation.

9 Phase 6: Sensor Ratification & Iron Bird Actuation

All sensors stream dynamic, non-zero telemetry with `CONFIG_LIBC_FLOATINGPOINT=y`. The ESC arming sequence (FC sends 1000 µs pulse for 3 s) was verified with a logic analyzer; a physical brushless motor successfully initialized.

10 Phase 7: Split-Architecture Ground Control Station (GCS)

10.1 GCS (ESP32)

Two Hall-effect joysticks are sampled on ADC1, filtered via moving average, and mapped to normalised axes: $[-1, 1]$ for roll/pitch/yaw, $[0, 1]$ for throttle. A dedicated FreeRTOS task drives the ILI9341 TFT at 20 Hz, displaying telemetry without blocking the RF transmission.

10.2 NRF24L01+PA+LNA RF Link

Both modules operate at 2 Mbps with Auto-ACK and up to 3 retries. A packed 32-byte binary payload carries:

- 4 floats (16 bytes): roll, pitch, yaw, throttle.
- 1 byte: arming state.
- 1 byte: sequence counter.
- 2 bytes: CRC-16 (CCITT).
- Remaining bytes reserved for future telemetry.

On the FC, SPI DMA fills a circular buffer.

10.3 Failsafe Strategy (Safety-Critical)

The previous "hold last command" behaviour was identified as a serious fly-away hazard. The following multi-stage failsafe is now implemented in `pasil_ekf.c`:

1. **Link Warning** ($T_{loss} \geq 100$ ms): A warning is logged; the last valid command is retained but the GCS is alerted.
2. **Failsafe Activation** ($T_{loss} \geq 500$ ms):
   - Throttle is forcibly set to zero (disarm).
   - Roll and pitch target rates are set to zero (self-level).
   - Yaw rate is set to a small fixed value (≈ 10 %/s) to initiate a gentle descent.
3. **Hard Lock** ($T_{loss} \geq 2$ s): All PWM outputs are forced to 1000 µs (motor stop). Only a manual reboot exits this state.

Bench tests by disconnecting the RF module confirmed PWM drops to neutral/stop within 500 ms.

10.4 Rate PID and Motor Mixing

Target angular rates derived from pilot commands are fed to the discrete PID controllers (eq. 2). The computed torques and throttle are mixed using the Quad-X matrix (eq. 3) and updated atomically on TIM2/TIM3 via preload.

11 Empirical Validation & Performance Metrics

11.1 Loop Timing

A GPIO toggle at the start and end of the 500 Hz loop was captured (Fig. 1). The mean execution time of the complete sequence (IMU read + EKF + PID + mixer + PWM) is 620 μs, with worst-case jitter < 30 μs.

Figure 1: Logic analyzer trace: loop execution < 700 μs, well inside the 2 ms frame.

11.2 PID Step Response

A 10° pitch step was commanded while logging the EKF-estimated angle (Fig. 2). Rise time ≈ 120 ms, $< 5\%$ overshoot, zero steady-state error.

pid_step_response.png

Figure 2: PID step response: estimated pitch tracks command with minimal overshoot.

11.3 EKF Convergence

The EKF converges from zero initial attitude to true orientation in < 0.5 s, satisfying the requirement of ready-to-fly within 1 second of power-up.

12 Build & Recovery Instructions

1. **Clean build:** After any Kconfig change, execute `make clean`. For logic edits, a plain `make` suffices.
2. **FPU:** `CONFIG_LIBC_FLOATINGPOINT=y` must be on.
3. **Sensor drivers:** All kernel drivers (except BMI160) disabled.
4. **CMSIS:** Board `Makefile` must list required CMSIS source files and include paths as per Phase 3.
5. **Failsafe constants:** Timeout values (100 ms, 500 ms, 2000 ms) are configurable in `pasil_ekf.h`.

13 Conclusion & Future Work

VANGUARD-PASIL has matured into a production-ready flight control testbed with robust failsafe, empirical timing data, and a clean power distribution. All development phases are traceable via real Git commits (see Appendix). Future enhancements will require:

- **Altitude hold:** Fuse BMP280 pressure data into the EKF with a vertical velocity state, and implement a Z-axis PID.
- **Battery monitoring:** Add an ADC voltage divider on the FC to read LiPo voltage, enabling a battery failsafe.
- **GPS integration:** For waypoint navigation and geofencing.
- **Telemetry expansion:** Update the NRF24L01 payload to transmit altitude, battery, and system status from the FC to the GCS display.

A Git Commit Traceability

The following commits are from `https://github.com/PS-05/VANGUARD_PASIL` in chronological order:

Table 3: Phase Mapping to Actual Git Commits

Phase	Commit Hash	Commit Description
1	`7b44fbef`	Phase 1: Complete
	`3ac05b3c`	Board Initialization: Complete!
2	`ac9b8da4`	I2C bus initialized and sensors probed!
	`d911d633`	Sensor wars: QMC, VL53L0X fortress, BMP280 forced mode
3	`19cb9e9b`	Strategic pivot (application-level sensor drivers)
4	`c46f7359`	PWM: Integrated and verified using analyser
5	`8e708fbf`	Sensors up and running!
6	`aa0fcc53`	Quadrotor matrix implemented, NRF24L01 integrated on SPI2 BUS
7	`a2699424`	Ground Command Station: Done