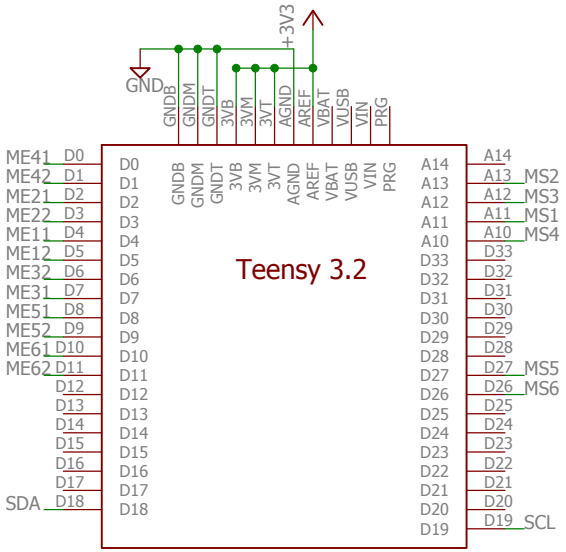
Teensy 3.2
+3V3
GND
GNDB
GNDM
GNDT
3VB
3VM
3VT
AGND
AREF
VBAT
VUSB
VIN
PRG
ME41 D0
ME42 D1
ME21 D2
ME22 D3
ME11 D4
ME12 D5
ME32 D6
ME31 D7
ME51 D8
ME52 D9
ME61 D10
ME62 D11
D12
D13
D14
D15
D16
D17
SDA D18
A14
A13 MS2
A12 MS3
A11 MS1
A10 MS4
D33
D32
D31
D30
D29
D28
D27 MS5
D26 MS6
D25
D24
D23
D22
D21
D20
D19 SCL

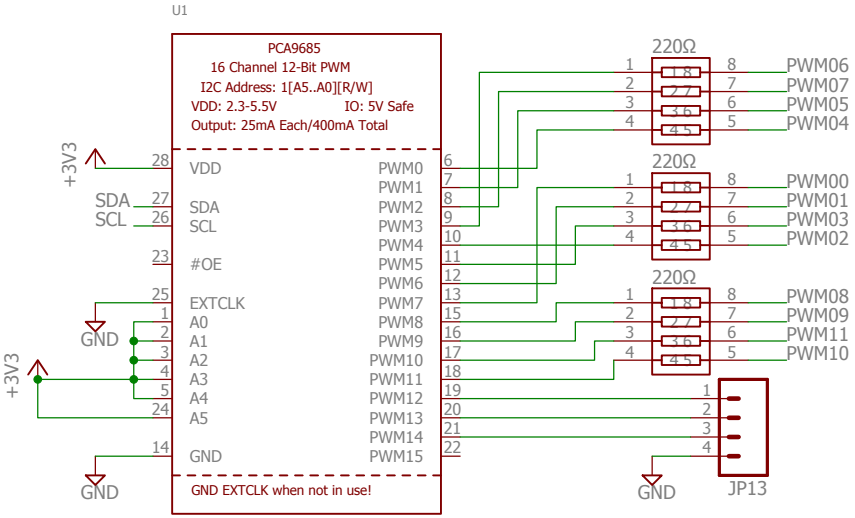
U1
PCA9685
16 Channel 12-Bit PWM
I2C Address: 1[A5..A0][R/W]
VDD: 2.3-5.5V
IO: 5V Safe
Output: 25mA Each/400mA Total
VDD
SDA
SCL
#OE
EXTCLK
A0
A1
A2
A3
A4
A5
GND
PWM0
PWM1
PWM2
PWM3
PWM4
PWM5
PWM6
PWM7
PWM8
PWM9
PWM10
PWM11
PWM12
PWM13
PWM14
PWM15
GND EXTCLK when not in use!
+3V3
GND
220Ω
PWM06
PWM07
PWM05
PWM04
PWM00
PWM01
PWM03
PWM02
PWM08
PWM09
PWM11
PWM10
JP13

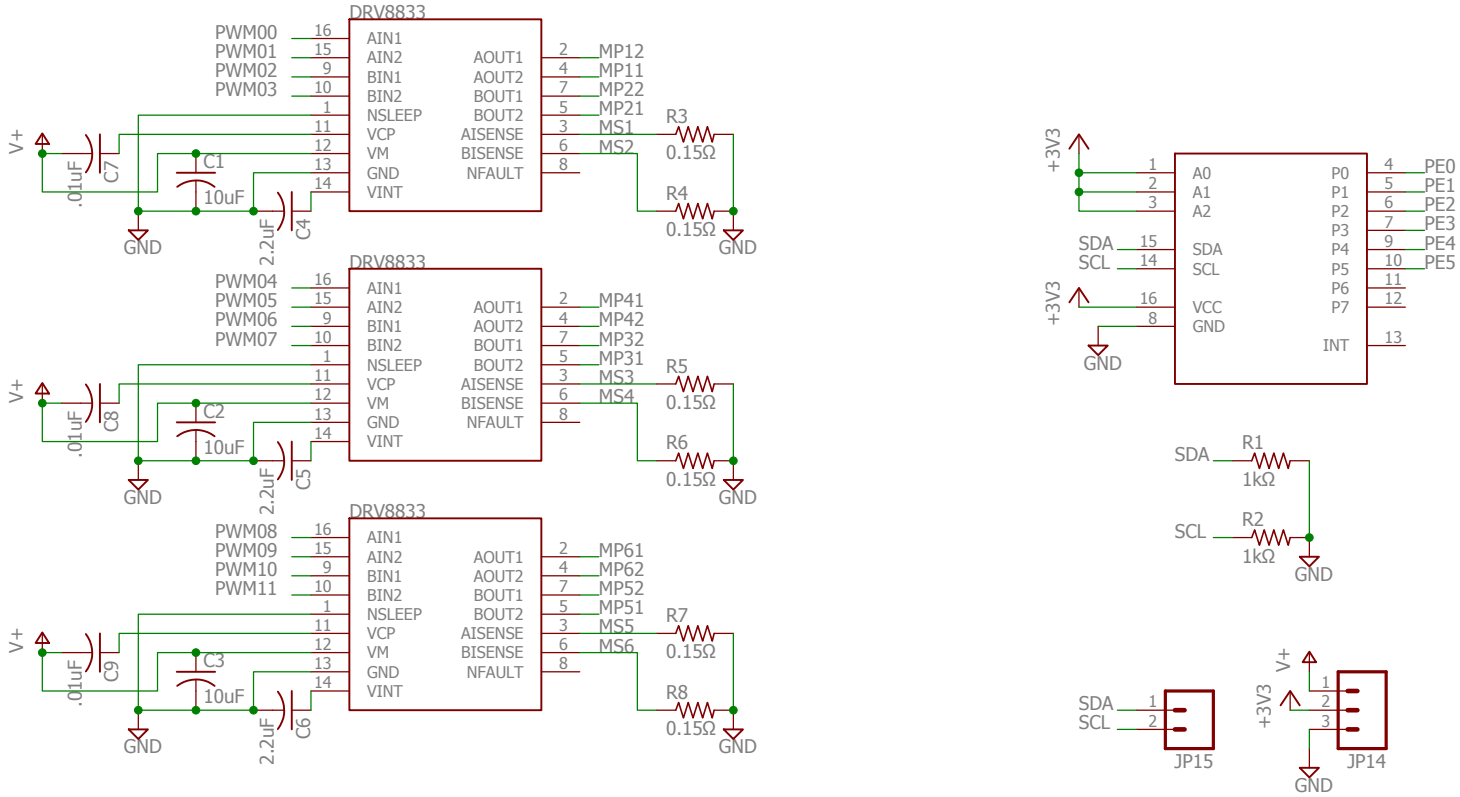
DRV8833
PWM00
PWM01
PWM02
PWM03
AIN1
AIN2
BIN1
BIN2
NSLEEP
VCP
VM
GND
VINT
AOUT1
AOUT2
BOUT1
BOUT2
AISENSE
BISENSE
NFAULT
MP12
MP11
MP22
MP21
MS1
MS2
R3
0.15Ω
R4
0.15Ω
V+
.01uF
C7
C1
10uF
2.2uF
C4
GND
DRV8833
PWM04
PWM05
PWM06
PWM07
MP41
MP42
MP32
MP31
MS3
MS4
R5
0.15Ω
R6
0.15Ω
C8
C2
C5
DRV8833
PWM08
PWM09
PWM10
PWM11
MP61
MP62
MP52
MP51
MS5
MS6
R7
0.15Ω
R8
0.15Ω
C9
C3
C6

+3V3
A0
A1
A2
SDA
SCL
VCC
GND
P0
P1
P2
P3
P4
P5
P6
P7
INT
PE0
PE1
PE2
PE3
PE4
PE5
GND
SDA
R1
1kΩ
SCL
R2
1kΩ
GND
SDA
SCL
JP15
V+
+3V3
JP14
GND

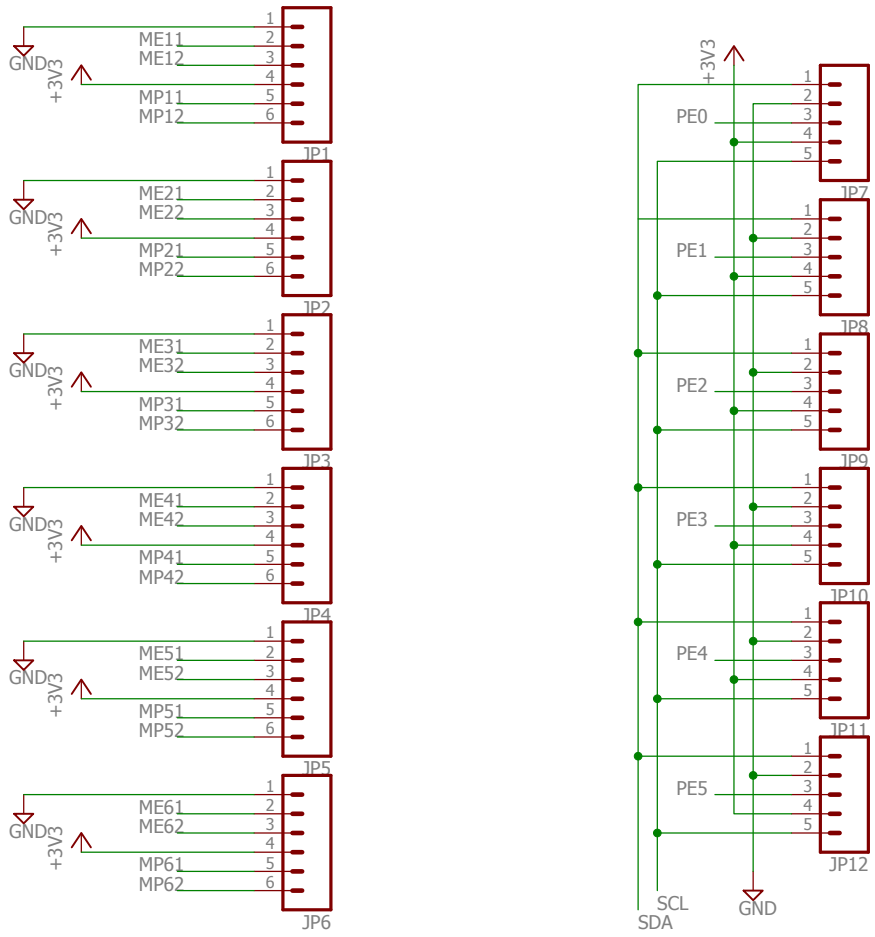
GND
+3V3
ME11
ME12
MP11
MP12
JP1
ME21
ME22
MP21
MP22
JP2
ME31
ME32
MP31
MP32
JP3
ME41
ME42
MP41
MP42
JP4
ME51
ME52
MP51
MP52
JP5
ME61
ME62
MP61
MP62
JP6
PE0
JP7
PE1
JP8
PE2
JP9
PE3
JP10
PE4
JP11
PE5
JP12
SCL
SDA