TABLE OF CONTENTS

EXTERIOR 1
GLASS - ASSY 2
GLASS FRONT 3
GLASS SIDE - ASSY 4
FRONT 6
MIRROR - OUTSIDE 7
WINDSHIELD WIPER - ASSY 8
FRONT MIDDLE PANEL - ASSY 9
FRONT BUMPER - ASSY 10
FRONT MIDDLE BUMPER 11
BUMMER - ASSY-FR,CORNER,LH 12
BUMMER - ASSY-FR,CORNER,RH 13
LAMP FRONT - ASSY 14
LAMP ASSY - HEAD LH 15
LAMP ASSY - HEAD RH 16
COVER - ASSY 17
HINGE - ASSY 18
SPOILER - ASSY 19
FRONT SPOLIER - ASSY 20
FRONT SPOLIER - ASSY - LH 21
FRONT SPOLIER - ASSY - RH 22
REAR 23
REAR MIDDLE PANEL-- ASSY 24
BUMMER - ASSY 25
LAMP REAR-- ASSY 26
LAMP REAR RH - ASSY 27
LAMP REAR RH 28
LAMP REAR LH - ASSY 29
LAMP REAR RH 30
REAR MIDDLE PANEL-- ASSY 31
REAR SPOLIER - ASSY 32
SIDE BODY 33

INTERIOR 34
CEILING 35
FRONT HEADLINING - ASSY 36
REAR HEADLINING - ASSY 37
MIDDLE CEILING 38
FLOORING CELING - ASSY 39
SIDE BODY 40
RH SIDE BODY 41
RH SIDE BODY 43
DASHBOARD - ASSY 45
MECHANICAL COMPONENT SET 46
SWITCH SUPPORT - ASSY 47
SWITCHES - ASSY 48
DASHBOARD - ASSY 49
SUB-DASHBOARD 50
MINOR ITEMS 51
CURTAIN - ASSY 52
SUNVISOR - ASSY 53
SIDE CURTAIN - ASSY 54
REAR CURTAIN - ASSY 55
SEATS 56
WIND DUCT - ASSY 57
LUGGAGE SHELVES - ASSY 58
FLOOR - ASSY 59
FLOORING BOARD - ASSY 60
HATCHES - ASSY 61
MOULDING - ASSY 62
COVER MOULDING 64
SEAT RAIL - ASSY 65
STAIRS COVER 66
SAFETY SYSTEM 67
HANDRAIL - ASSY 68
FUNCTIONAL SYSTEM 69

LUGGAGE COMPARTMENT 70

BODY 71

FRONT FRAME - ASSY 72
FRONT FRAME 73
CONNECTING ITEM 75
DASHBOARD FRAME 77
REAR FRAME - ASSY 78
REAR FRAME 79
CONNECTING ITEM 81
EXPANDING WATER TANK SQUARE PIPE 82
FLOOR FRAME - ASSY 83
CABIN FLOOR FRAME - ASSY 84
CABIN FLOOR FRAME 85
STEEL SHEET - ASSY 87
MAIN FLOOR FRAME - ASSY 88
MAIN FLOOR FRAME - ASSY 89
CONNECTING ITEM 91
STEEL SHEET - ASSY 93
STAIRS FRAME - ASSY 95
ENGINE FLOOR FRAME - ASSY 97
INSULATION 98
ENGINE FLOOR FRAME 99
SIDE FRAME - ASSY 100
LH SIDE FRAME - ASSY 101
CONNECTING ITEM 102
RH SIDE FRAME 103
RH SIDE FRAME - ASSY 105
CONNECTING ITEM 106
BODY SIDE RH 107
ROOF FRAME - ASSY 109
CONNECTING ITEM 110
ROOF FRAME 111
ROOF STEEL SHEET - ASSY 113
STEEL SHEET - ASSY 114

STEEL SHEET 115
STEEL SHEET - ASSY 116
SCR TANK COVER - ASSY 118
STEEL SHEET - ASSY 119
DOOR - ASSY 121
PASSENGER DOOR - ASSY 122
PASSENGER DOOR LEVER ARM 123
STOPPER - ASSY 124
PASSENGER DOOR TURNBUCKLE - ASSY 125
PASSENGER DOOR PUMB PILLAR - ASSY 127
PASSENGER DOOR 128
WEATHERSTRIP 130
EMERGENCY DOOR 131
FLAP - ASSY 132
FRONT FENDER FLAP ASSY 133
FRONT FENDER FLAP RH 134
FRONT FENDER FLAP LH 135
TANK FUEL FLAP ASSY 136
TANK FUEL FLAP LH ASSY 137
TANK FUEL FLAP RH ASSY 138
LUGGAGE FLAP - ASSY 139
RH REAR FENDER FLAP 141
REAR FENDER FLAP RH 142
REAR FENDER FLAP LH 143
FLAP GILD - ASSY 144
GRID FLAP RH 145
GRID FLAP LH 146
REAR FLAP - ASSY 147
ELECTRIC SYSTEM 148
CONDUCTOR WIRE SYSTEM 149
CHASSIS ELECTRICAL HARNESS - ASSY 150
BATTERY WIRE 151
HEADLINING ELECTRICAL HARNESS - ASSY 152
DASHBOARD ELECTRICAL HARNESS - ASSY 153
LEFT SWITCH WIRE 154

INTERGRATED DASHBOARD WIRE 155
REAR ELECTRICAL HARNESS - ASSY 156
SPOILER ELECTRICAL HARNESS 157
A/C ELECTRICAL HARNESS 158
ELECTRICAL DEVICE 159
SOUND, IMAGE SYSTEM 160
SAFETY AND CONVENIENCE SYSTEM 161
FUSE AND RELAY 162
SIGNAL PROCESSOR 163
SWITCHS 164
HORN 165
BATTERY - ASSY 166
TRANSFORMER ASSY 167
HEADLIGHT SYSTEM 168
BARE CHASSIS 169
DIESEL ENGINE - ASSY 170
ENGINE 171
HYDRAULIC PUMP 172
POWER MOTOR 173
AIR COMPRESSOR 174
SUB PARTS 175
AIR COMPRESSOR 176
GENERATOR GROUP 177
TURBOCHARGER GROUP 178
TURBOCHARGER ASSY 179
TURBOCHARGER OIL PIPE GROUP 180
COMPRESSOR PIPE GROUP 181
ENGINE BLOCK 182
ENGINE ASSY 183
ENGINE BLOCK GROUP 184
CRANKCASE ASSEMBLY 185
CYLINDER BLOCK PREASSEMBLY 186
FRONT COVER GROUP 188
CYLINDER HEAD COVER ASSEMBLY 189
CYLINDER HEAD COVER GROUP 190
ENGINE HANGER PLATE 191
CYLINDER HEAD SUBASSEMBLY 192
CYLINDER HEAD ASSEMBLY 193

CYLINDER HEAD GROUP 194
VALVE SYSTEM 195
INTAKE ROCKER ARM SET 196
VALVE TRAIN GROUP 197
INTEGRATED ROCKER ARM SHAFT ASSEMBLY 198
FUEL SYSTEM 200
HIGH PRESSURE PUMP GROUP 201
FUEL INJECTOR GROUP 202
LOW PRESSURE FUEL PIPE GROUP 203
FUEL FILTER GROUP 204
HIGH PRESSURE PIPE SET 205
INTAKE/EXHAUST SYSTEM 206
EXHAUST MANIFOLD GROUP 207
INTAKE MANIFOLD GROUP 208
TURBOCHARGER GROUP 209
COLLING SYSTEM 210
WATER PUMP GROUP 211
WATER OUTLET PIPE GROUP 212
SENSOR ELECTRIC SYSTEM 214
COMMON RAIL SYSTEM ASSEMBLY 215
ELECTRONIC CONTROL AND SENSOR SYSTEM 216
LUBRICATION SYSTEM 218
OIL PUMP GROUP 219
OIL PAN ASSEMBLY 220
OIL DIPSTICK GROUP 221
OIL STRAINER GROUP 222
OIL COOLER GROUP 223
OIL COOLER ASSEMBLY 224
DIPSTICK PIPE UPPER SET 225
OIL FILLING TUBE GROUP 226
TURBOCHARGER OIL PIPE GROUP 227
OIL-GAS SEPARATOR GROUP 228
OIL PAN GROUP 229
MOTION GROUP 230
CRANKSHAFT GROUP 231
CAMSHAFT ASSEMBLY 232
CRANKSHAFT SUBASSEMBLY 233
PISTON AND CONNECTING ROD GROUP 234
CONNECTING ROD ASSEMBLY 235
SECONDARY BALANCE MACHANISM 236
SECONDARY BALANCE MACHANISM 237
BALANCE SHAFT UNIT HOUSING SET 238
CRANKSHAFT PULLEY GROUP 239
IDLER GEAR SET 240
IDLER GEAR ASSEMBLY 241
FLYWHEEL GROUP 242

FLYWHEEL HOUSING ASSEMBLY 243
FLYWHEEL GROUP 245
FLYWHEEL ASSEMBLY 246
MINOR ITEMS 247
TENSIONER AND BELT GROUP 248
ENGINE BRACKET GROUP 249
COOLING SYSTEM 250
RADIATORS - ASSY 251
RADIATOR ASSY 252
INTERCOOLER 253
FAN FRAME 254
COVER - ASSY 255
FAN DRIVING ASSY 256
TURNBUCKLE - ASSY 257
COOLING FAN 258
TURNBUCKLE 259
RADIATOR FRAME - ASSY 260
COOLING PIPE - ASSY 261
AIR FILTER - ASSY 263
SILENT TANK - ASSY 264
FUEL SYSTEM 265
FUEL TANK - ASSY 266
FUEL PIPE - ASSY 267
FUEL FILTER 268
ACCELABRATOR PEDAL - ASSY 269
EXHAUST AIR SYSTEM 270
SCR TANK - ASSY 271
EXHAUST PIPE - ASSY 272
CATALYSIS ASSY 273
MINOR ITEMS 274
CHASSIS FUNCTION SYSTEM 276
AIR COMPRESION SYSTEM 277
AIR TANK - ASSY 278
AIR VALVE 280
CHECK VALVE ASSY 281
ABOVE EMERGENCY VALVE 282
BELOW EMERGENCY VALVE 283
FRONT DISTRIBUTOR VALVE - ASSY 284
REAR DISTRIBUTOR VALVE - ASSY 285

DISTRIBUTOR VALVE - ASSY 286
VALVE PARKING BRAKE 287
ASR VAVLE - ASSY 288
SPRAYING VALVE - ASSY 289
CONTROLING VALVE - ASSY 290
AIR SUSPENSION LEVELING VALVE - ASSY 291
TOTAL CHECK VALVE - ASSY 292
ABS VALVE - ASSY 293
CONNECTOR SYSTEM 294
AIR PIPING 296
SENSOR 297
DRYER ASSY 298
WATER EXHAUST TANK - ASSY 299
PURGE TANK - ASSY 300
FRONT SUSPENSION SYSTEM 301
AIR BAG MOUNTING - ASSY 302
FRONT AIRBAG ASSY 303
VERTICAL BALANCE BAR ASSY 01 304
VERTICAL BALANCE BAR ASSY 02 305
HORIZONTAL BALANCE BAR - ASSY 306
FRONT BALANCE BAR ASSY 307
FRONT BALANCE BAR - ASSY 308
REAR SUSPENSION SYSTEM 309
REAR AXLE MOUNTING - ASSY 310
REAR AIRBAG ASSY 311
VERTICAL BALANCE BAR - ASSY 01 312
VERTICAL BALANCE BAR - ASSY 02 313
REAR BALANCE BAR - ASSY 314
REAR BALANCE BAR AS 315
VERTICAL BALANCE BAR MOUNTING - ASSY 316
COVER - ASSY 317
STEERING SYSTEM 314
STEERING DRIVE - ASSY 319
STEERING BOX - ASSY 320
STEERING ARM - ASSY 321
DRIVER - ASSY 322
STEERING SHAFT 323
THE POWER STEERING 324
STEERING SUPPORT PIPE - ASSY 325

CONNECTOR SYSTEM 326
POWERTRAIN 327
GEAR BOX - ASSY 328
WHEEL ASSY 329
GLASS HEATING SYSTEM 330
PIPE - ASSY 331
PIPE - ASSY 332
VALVE 333
AIR CONDITIONING SYSTEM 334
PIPE - ASSY 335
COMPRESSOR - ASSYCATEGORY 336

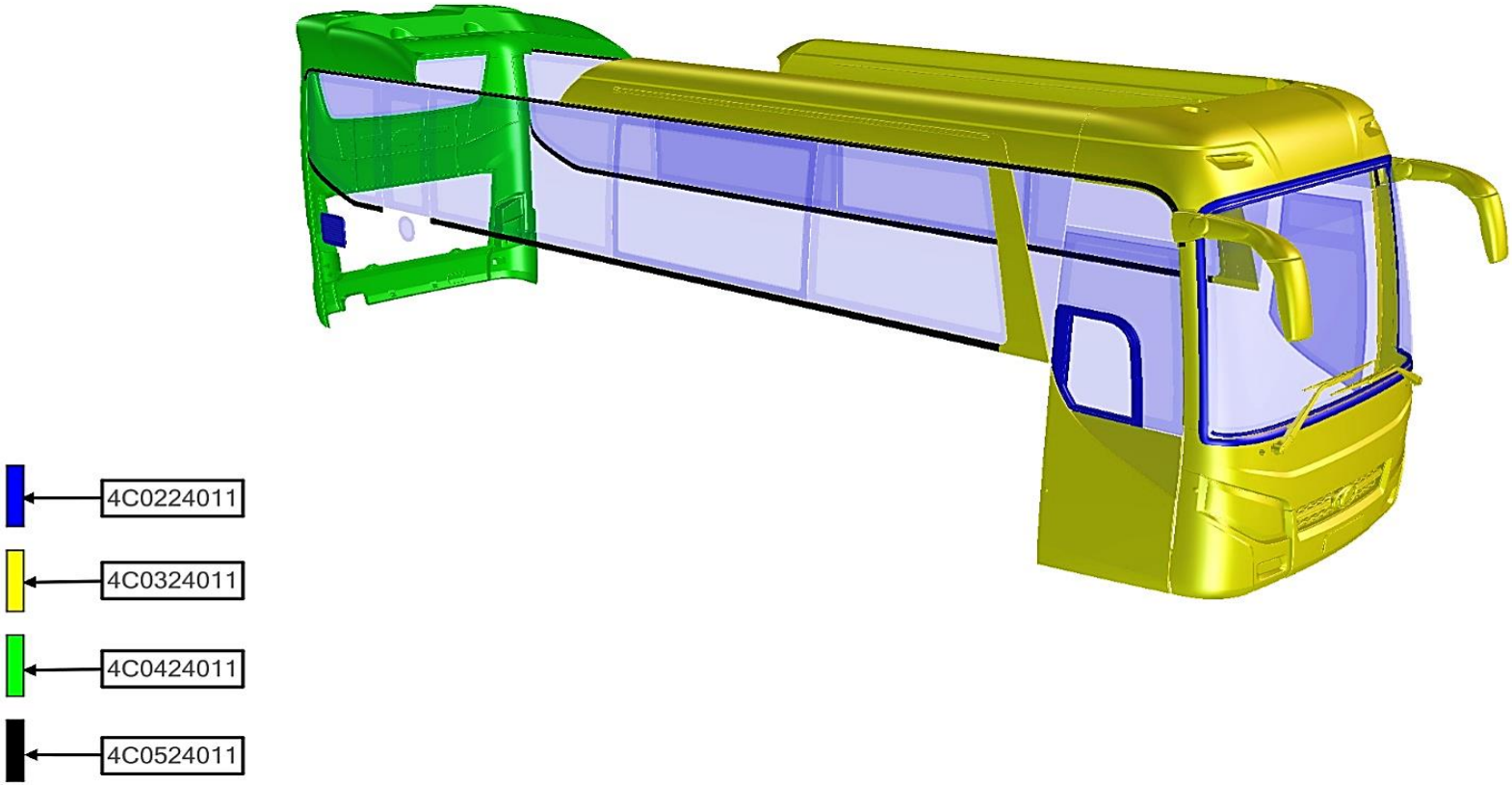

NAME_ASSB	CODE_PART NO	NAME	QTY
EXTERIOR	4C0324011	FRONT	1
	4C0424011	REAR	1
	4C0524011	SIDE BODY	1
	4C0224011	GLASS - ASSY	1

NAME_ASSB	CODE_PART NO	NAME	QTY
EXTERIOR			

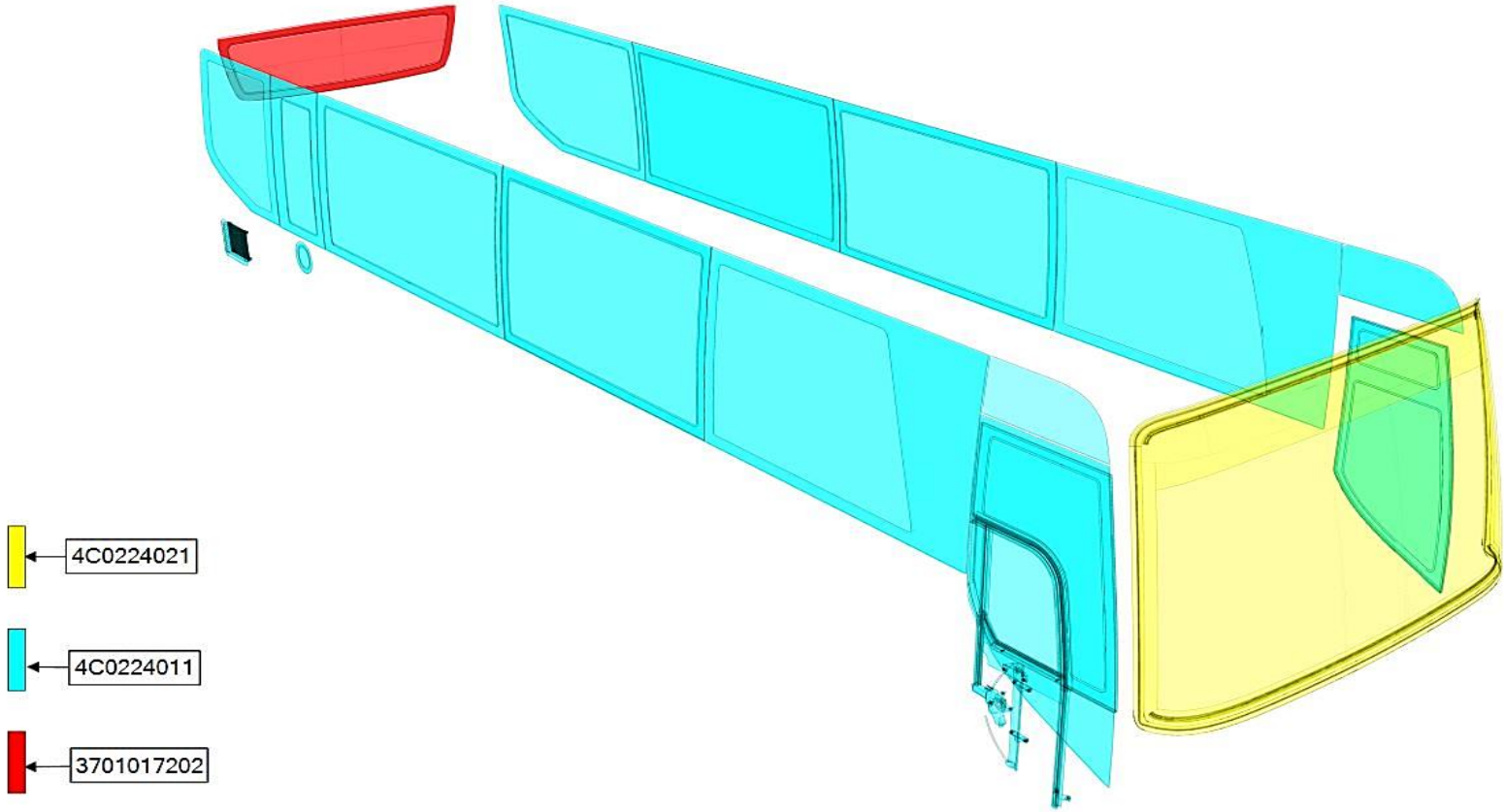

NAME_ASSB	CODE_PART NO	NAME	QTY
GLASS - ASSY	3701017202	LIFTER - ASSY	1
	4C0224021	GLASS FRONT	1
	4C0224031	GLASS SIDE - ASSY	1

NAME_ASSB	CODE_PART NO	NAME	QTY
GLASS - ASSY			

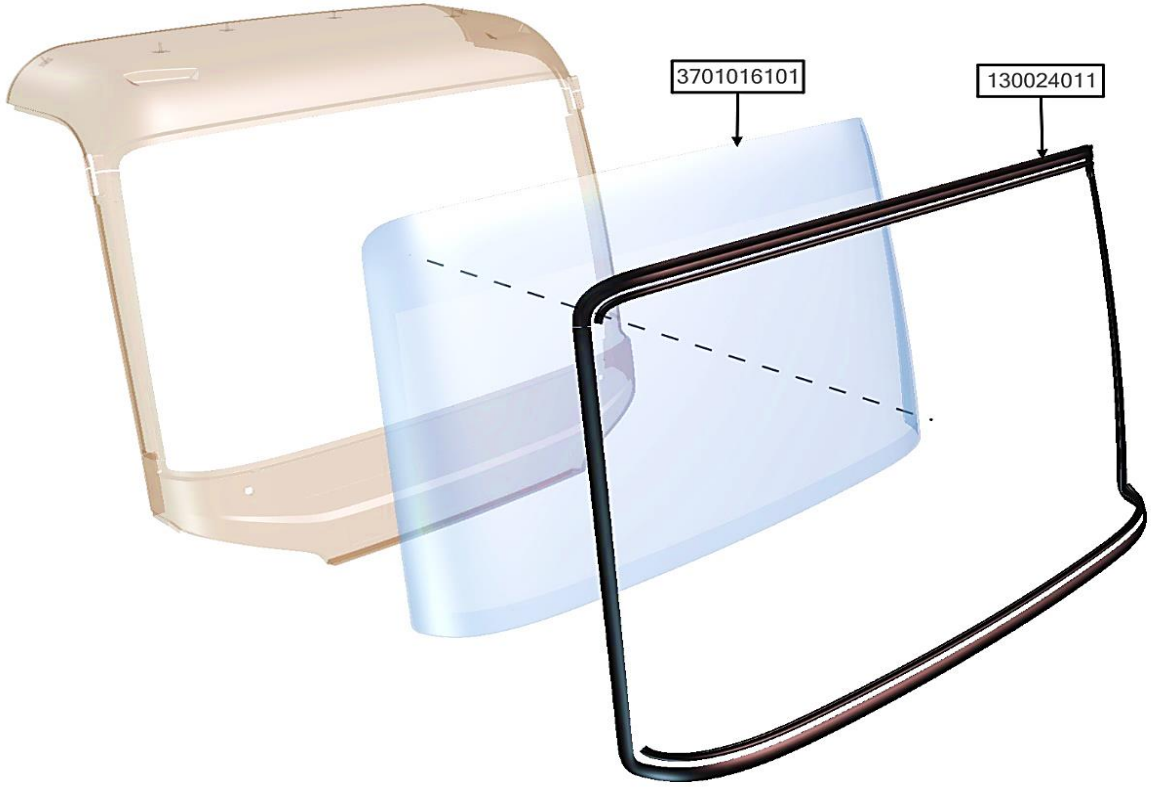

NAME_ASSB	CODE_PART NO	NAME	QTY
GLASS FRONT	130024011	RUBBER-SEALING	1
	3701016101	GLASS FRONT	1

NAME_ASSB	CODE_PART NO	NAME	QTY
GLASS FRONT			

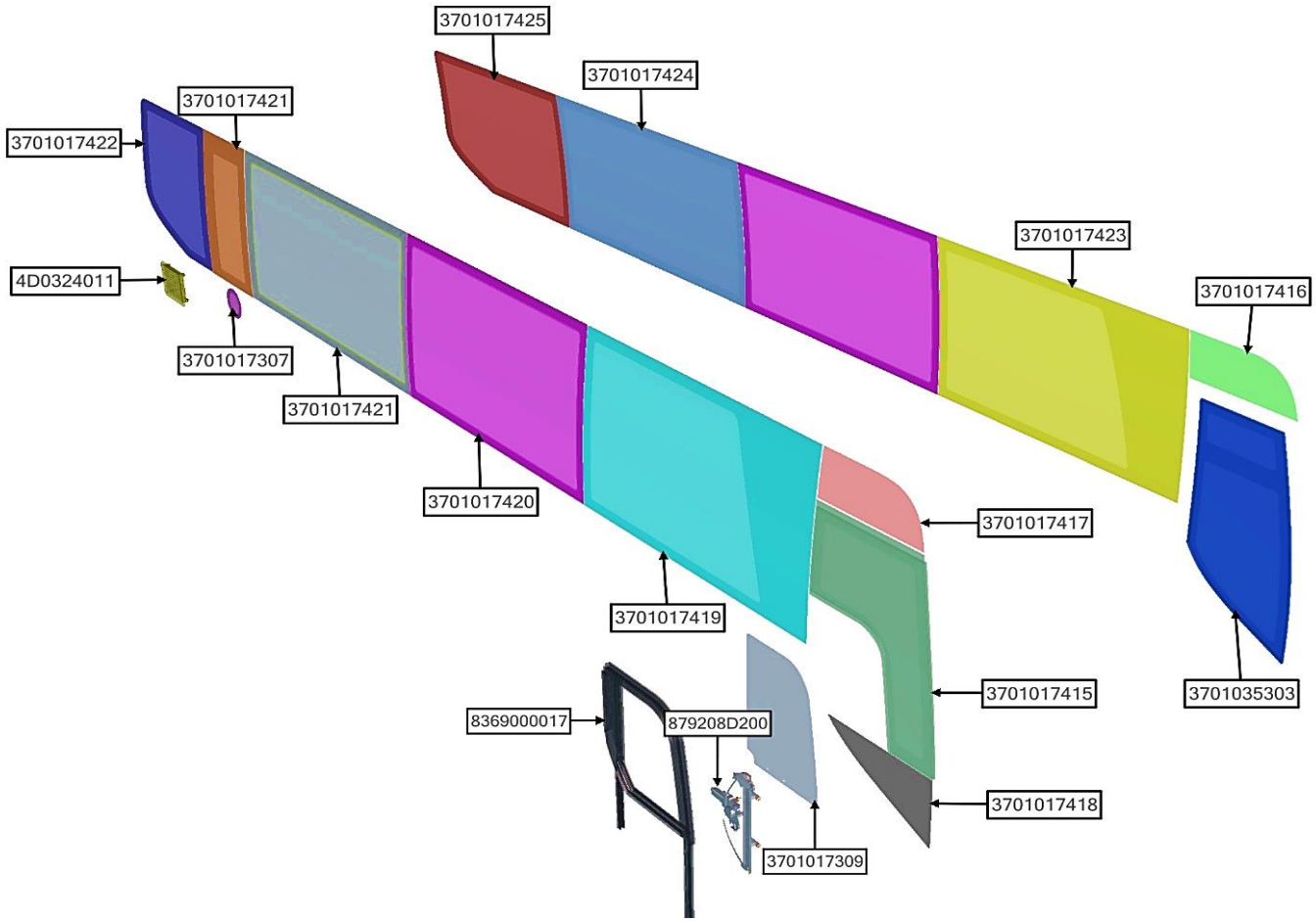

NAME_ASSB	CODE_PART NO	NAME	QTY
GLASS SIDE - ASSY	3701017424	LH SIDE GLASS 04	1
	3701017423	LH SIDE GLASS 02	1
	3701017416	LH SIDE GLASS 01	1
	3701017422	RH SIDE GLASS 05	1
	3701017421	RH SIDE GLASS 04	1
	3701017419	RH SIDE GLASS 02	1
	3701017417	RH SIDE GLASS 01	1

NAME_ASSB	CODE_PART NO	NAME	QTY
GLASS SIDE - ASSY	3701017420	SIDE GLASS 03	2
	3701017418	FIXED GLASS	1
	3701017307	EMERGENCY EXIT GLASS 02	1
	3701017421	EMERGENCY EXIT GLASS 01	1
	3701035303	PASSENGER DOOR GLASS	1
	3701017309	GLASS	1
	3701017415	DRIVER DOOR GLASS	1

NAME_ASSB	CODE_PART NO	NAME	QTY
GLASS SIDE - ASSY	8369000017	ALUMIUM FRAME	1
	4D0324011	WIND FILTER	1
	879208D200	MOTOR	1
	3701017425	LH SIDE GLASS 05	1

NAME_ASSB	CODE_PART NO	NAME	QTY
GLASS SIDE - ASSY			

NAME_ASSB	CODE_PART NO	NAME	QTY
FRONT	4E0624011	COVER - ASSY	1
	4E0524011	LAMP FRONT - ASSY	1
	4E0324011	FRONT MIDDLE PANEL - ASSY	1
	4E0724011	SPOILER - ASSY	1
	4E0224011	WINDSHIELD WIPER - ASSY	1
	4E0124001	MIRROR - OUTSIDE	1
	4E0424011	FRONT BUMPER - ASSY	1

NAME_ASSB	CODE_PART NO	NAME	QTY
FRONT			

NAME_ASSB	CODE_PART NO	NAME	QTY
MIRROR - OUTSIDE	HQ-TRIMDCH-OGKCHL-00023	MIRROR - OUTSIDE - LH	1
	HQ-TRIMDCH-OGKCHR-00024	MIRROR - OUTSIDE - RH	1
	ND-BULONG0-053512-00338	BOLT 08050125	12

NAME_ASSB	CODE_PART NO	NAME	QTY
MIRROR - OUTSIDE			

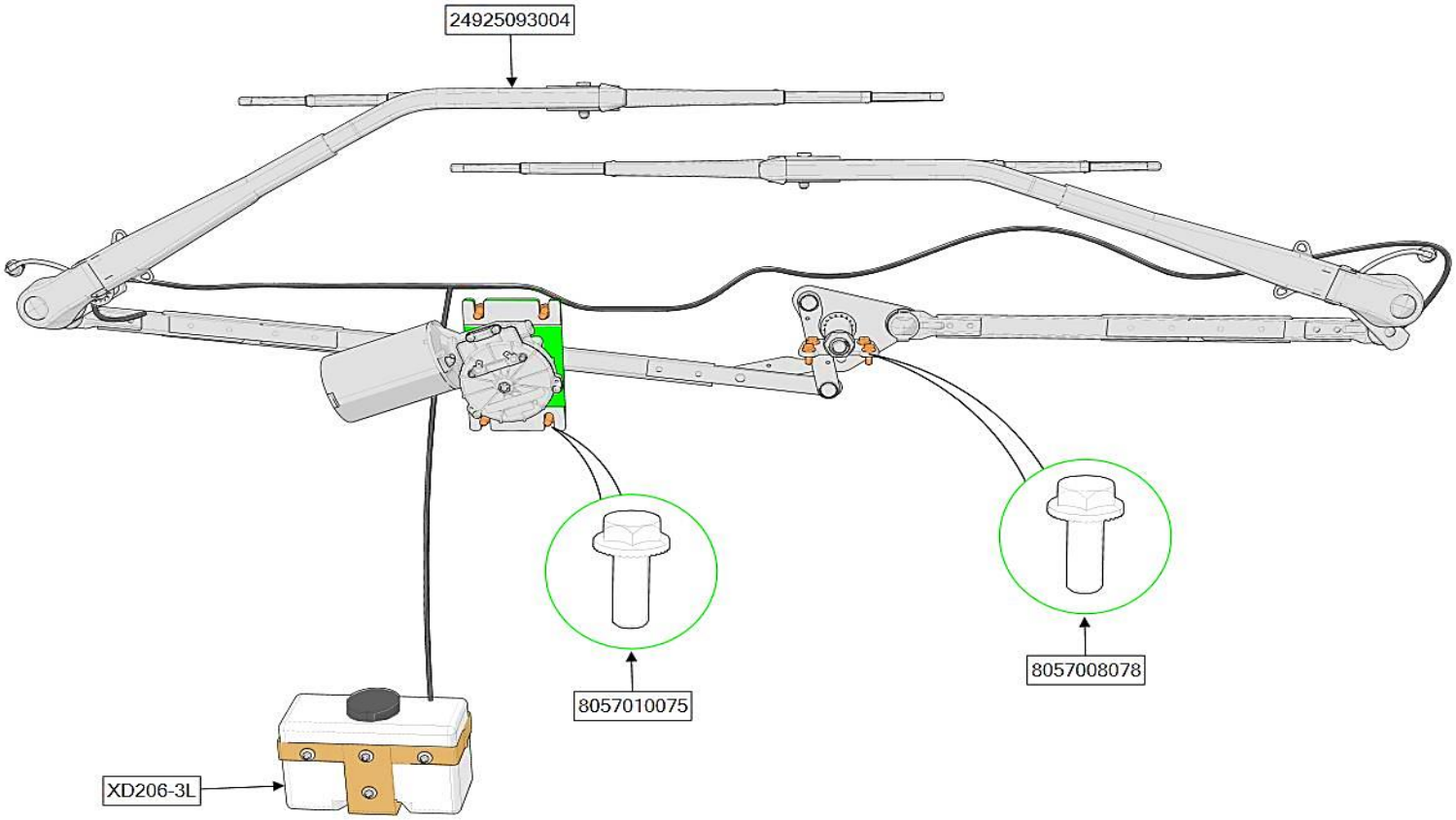

NAME_ASSB	CODE_PART NO	NAME	QTY
WINDSHIELD WIPER - ASSY	8057008078	BOLT 08020125	4
	8057010075	CONNECTOR 620046	4
	XD206-3L	RESEVOIR -FR	1
	24925093004	WINDSHIELD WIPER	1

NAME_ASSB	CODE_PART NO	NAME	QTY
WINDSHIELD WIPER - ASSY			

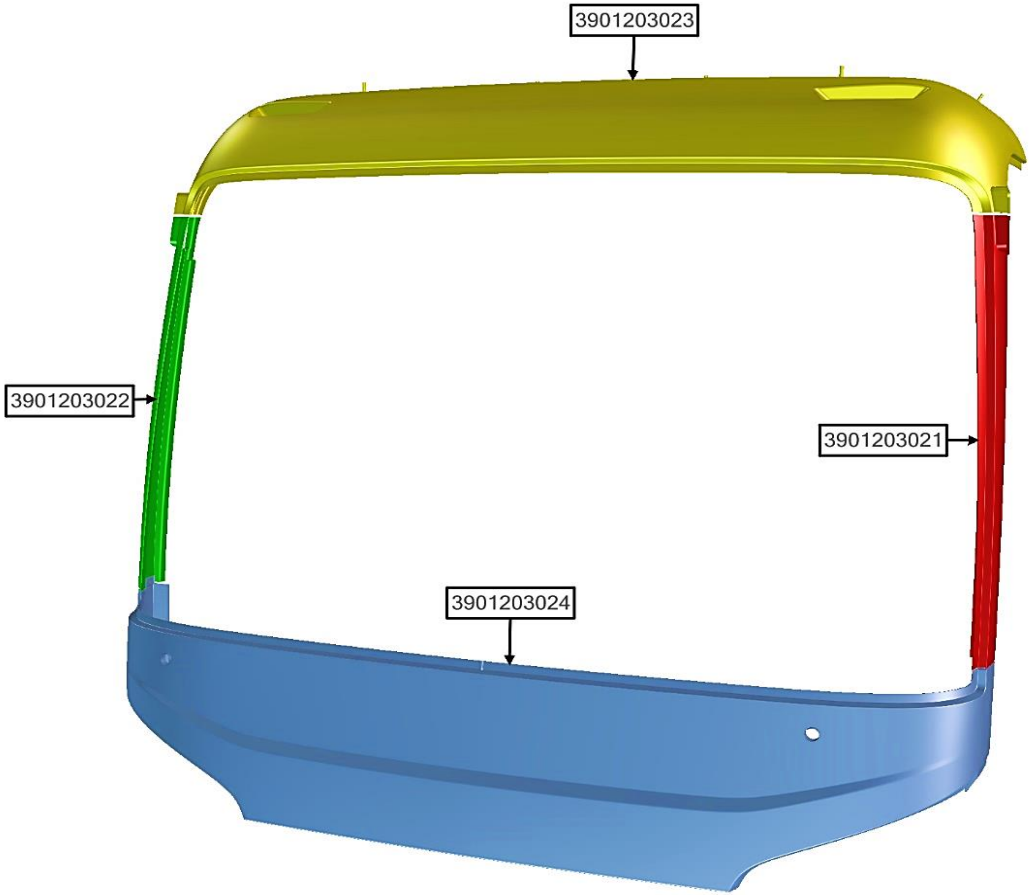

NAME_ASSB	CODE_PART NO	NAME	QTY
FRONT MIDDLE PANEL - ASSY	3901203021	PILLAR COVER - ASSY	1
	3901203022	PILLAR COVER - ASSY	1
	3901203023	FRONT ROOF PANEL	1
	3901203024	FRONT MIDDLE PANEL	1

NAME_ASSB	CODE_PART NO	NAME	QTY
FRONT MIDDLE PANEL - ASSY			

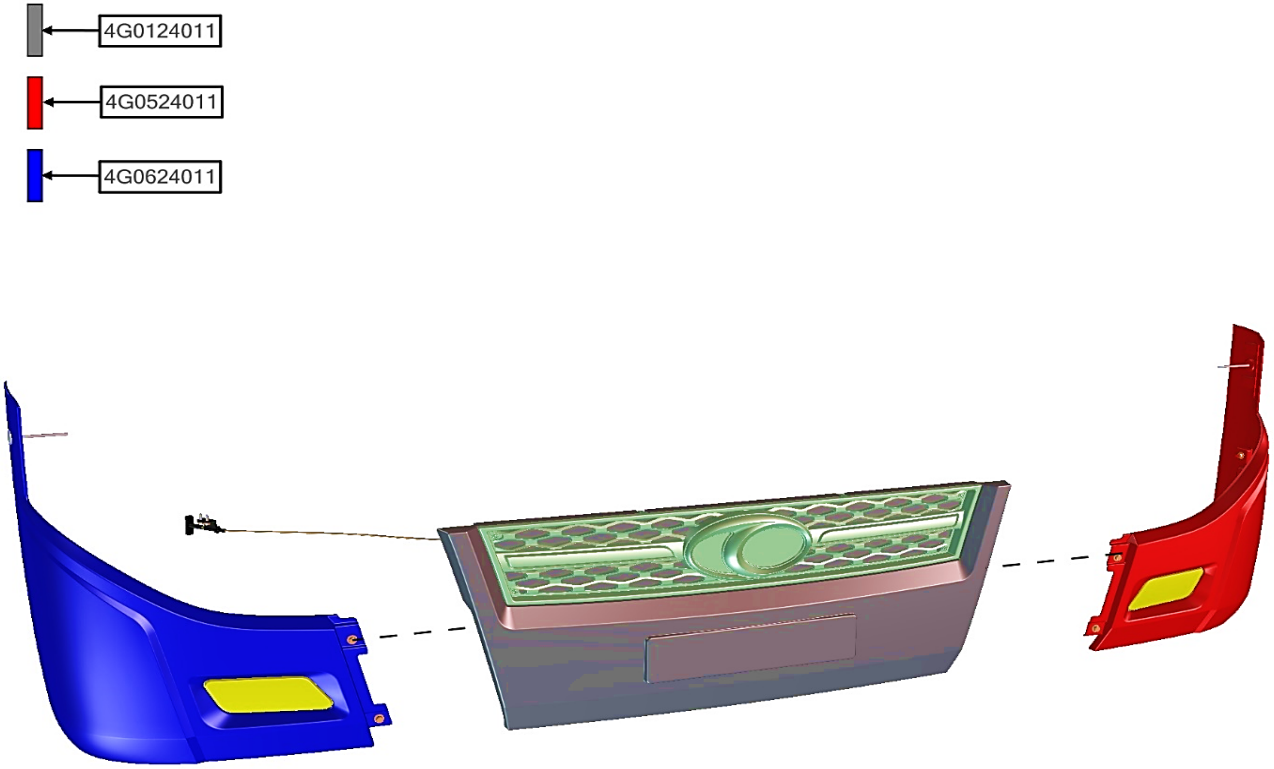

NAME_ASSB	CODE_PART NO	NAME	QTY
FRONT BUMPER - ASSY	4G0524011	BUMMER - ASSY-FR,CORNER,LH	1
	4G0624011	BUMMER - ASSY-FR,CORNER,RH	1
	4G0124011	FRONT MIDDLE BUMPER	1

NAME_ASSB	CODE_PART NO	NAME	QTY
FRONT BUMPER - ASSY			

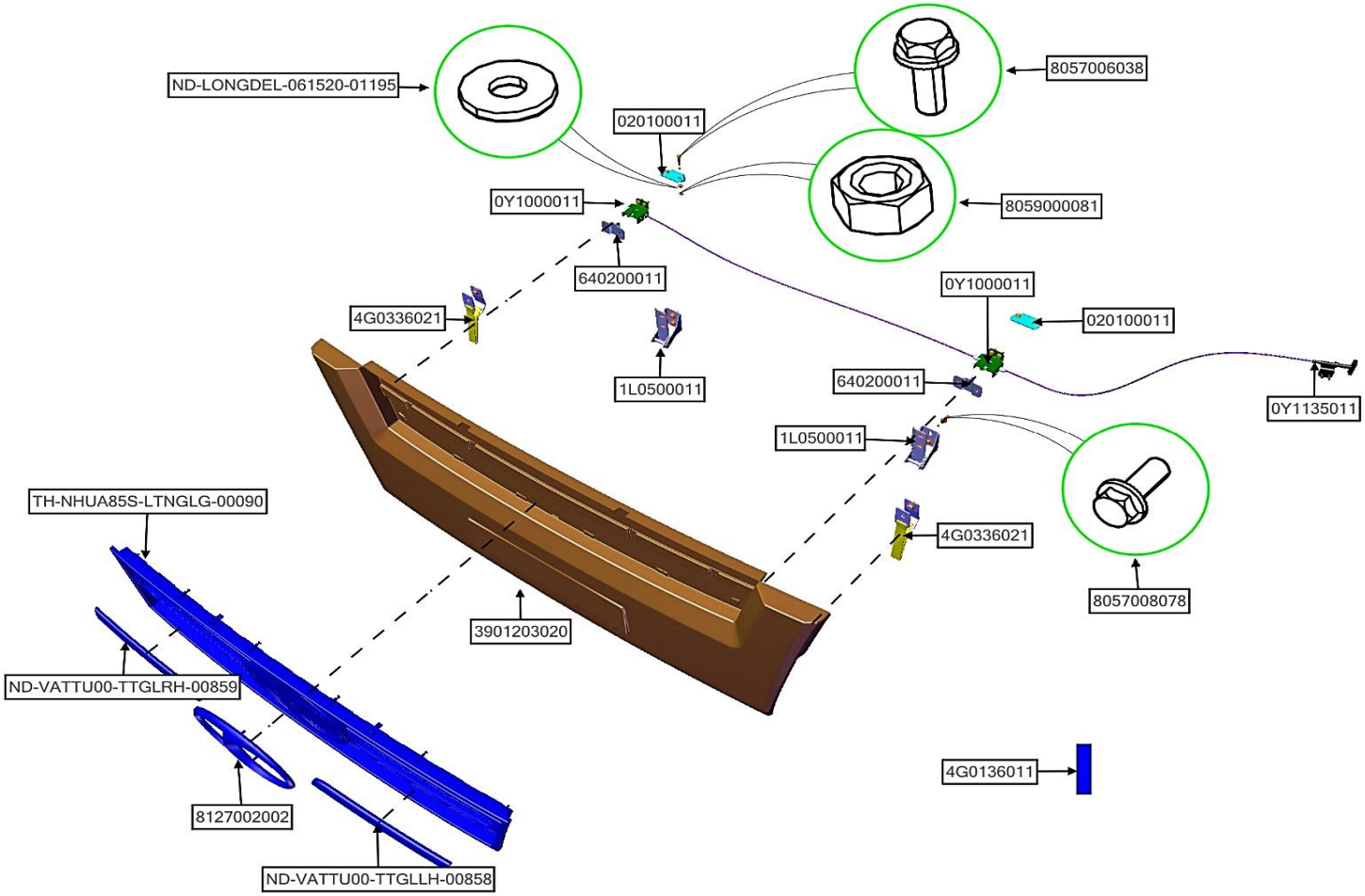

NAME_ASSB	CODE_PART NO	NAME	QTY
FRONT MIDDLE BUMPER	0Y1000011	LATCH	2
	0Y1135011	CABLE CATCH RELEASE	1
	1L0500011	HINGE	2
	4G0136011	GARNISH - ASSY-FR	1
	4G0336021	CABLE RH	2
	020100011	BRACKET	2
	640200011	STRIKER	2
	ND-VATTU00-TTGLRH-00859	COVER	1

NAME_ASSB	CODE_PART NO	NAME	QTY
FRONT MIDDLE BUMPER	3901203020	FRONT MIDDLE BUMPER	1
	8057006038	BOLT 06015100	1
	8057008078	BOLT 08020125	1
	8059000081	NUT 06100	1
	8127002002	LOGO 280X150	1
	ND-LONGDEL-061520-01195	WASHER Ø06	1
	ND-VATTU00-TTGLLH-00858	COVER	1
	TH-NHUA85S-LTNGLG-00090	GARNISH GRID	1

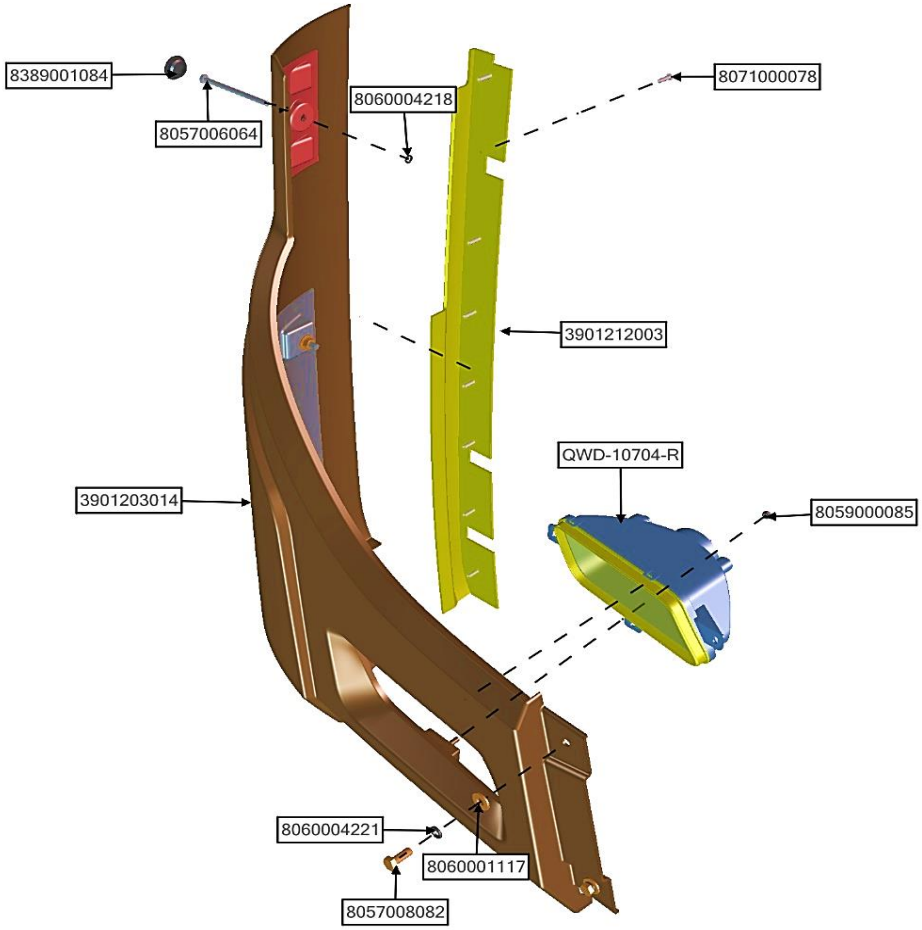

NAME_ASSB	CODE_PART NO	NAME	QTY
BUMMER - ASSY- FR,CORNER,LH	8057006064	BOLT 06100100	1
	8057008082	BOLT 08020125	1
	8389001084	COVER	1
	3901203014	FRONT BUMPER SIDE RH	1
	8071000078	SCREW 0520	1
	8060001117	WASHER Ø08	1
	8059000085	NUT 06100	1

NAME_ASSB	CODE_PART NO	NAME	QTY
BUMMER - ASSY- FR,CORNER,LH	QWD-10704-R	LAMP BUMPER FRONT RH	1
	8060004218	SPLIT WASHER Ø06	1
	8060004221	SPLIT WASHER Ø08	1
	3901212003	PILLAR COVER - ASSY	1

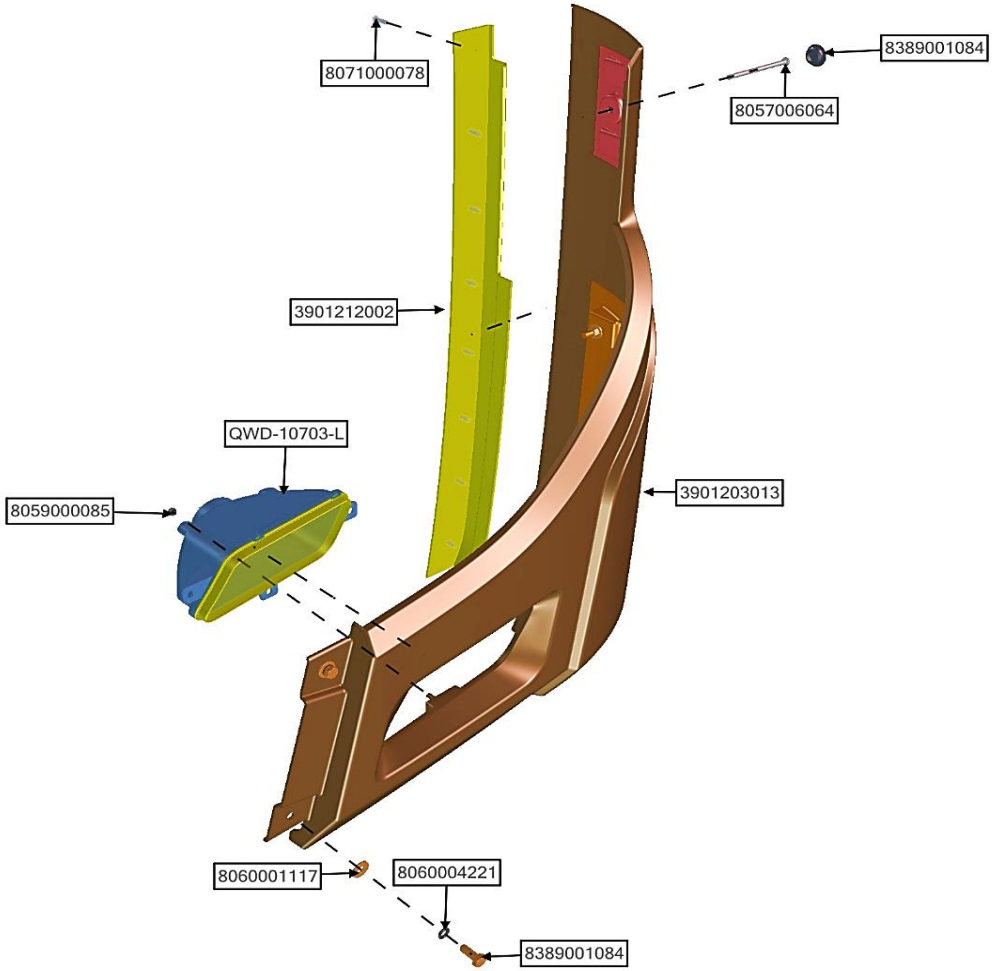

NAME_ASSB	CODE_PART NO	NAME	QTY
BUMMER - ASSY- FR,CORNER,RH	8057006064	BOLT 06100100	1
	8389001084	BOLT 08020125	1
	8389001084	COVER	1
	3901203013	FRONT BUMPER SIDE LH	1
	8071000078	SCREW 0520	1
	8060001117	WASHER Ø08	1
	8059000085	NUT 06100	1

NAME_ASSB	CODE_PART NO	NAME	QTY
BUMMER - ASSY- FR,CORNER,RH	QWD-10703-L	LAMP BUMPER FRONT LH	1
	8060004221	SPLIT WASHER Ø08	1
	3901212002	PILLAR COVER - ASSY	1

NAME_ASSB	CODE_PART NO	NAME	QTY
LAMP FRONT - ASSY	51310202124	LAMP ASSY- HEAD RH	1
	51310102124	LAMP ASSY- HEAD LH	1

NAME_ASSB	CODE_PART NO	NAME	QTY
LAMP FRONT - ASSY			

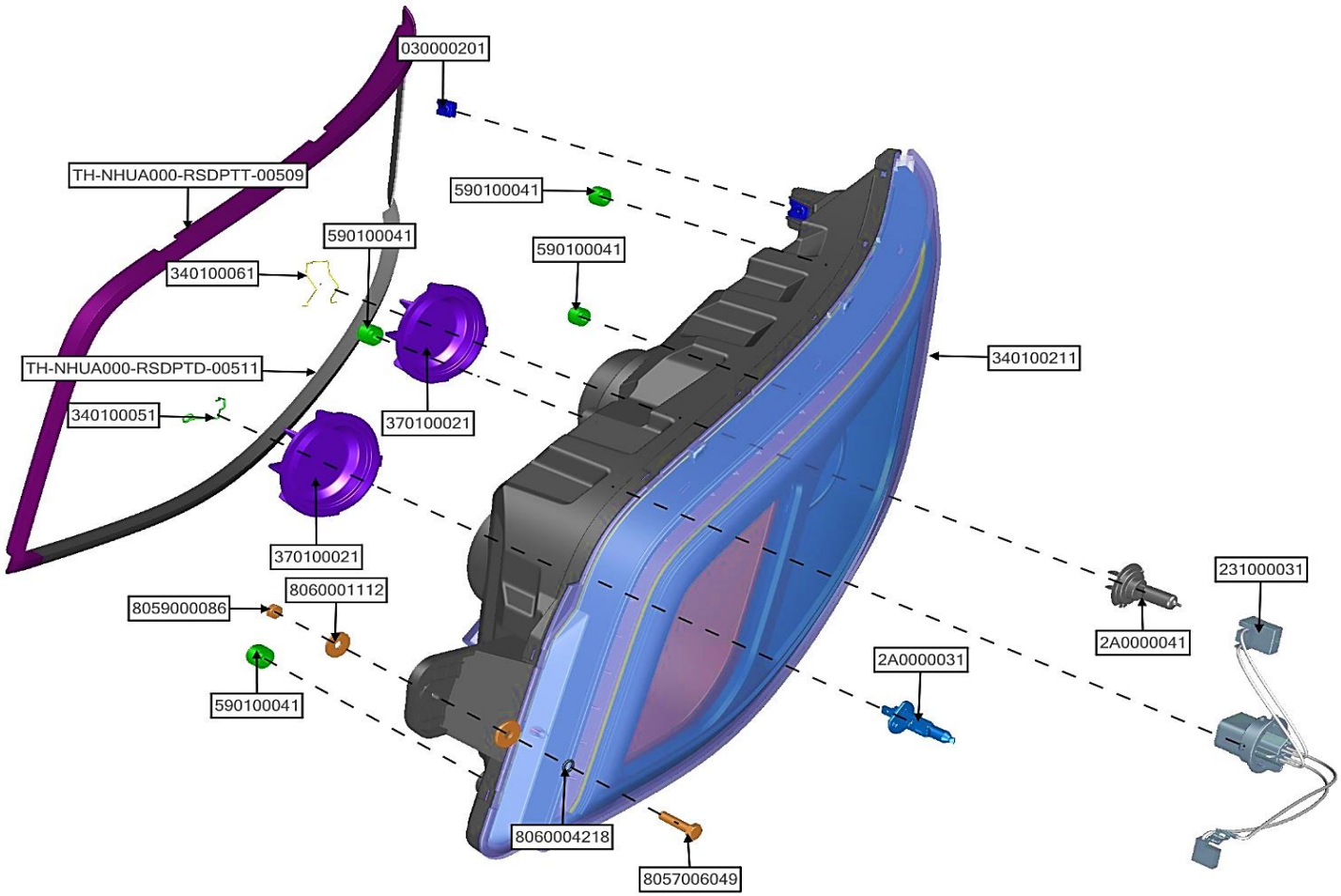

NAME_ASSB	CODE_PART NO	NAME	QTY
LAMP ASSY-HEAD LH	2A0000031	BULB	1
	2A0000041	BULB	1
	030000201	CLIP	1
	231000031	WIRING ASSY	1
	340100051	CLAMP BULD	1
	340100061	CLAMP BULD	1
	340100211	COVER LAMP LH	1
	TH-NHUA000-RSDPTT-00509	WEATHERSTRIP	1

NAME_ASSB	CODE_PART NO	NAME	QTY
LAMP ASSY-HEAD LH	370100021	COVER DUST	2
	590100041	RETAINER	4
	8057006049	BOLT	1
	8059000086	NUT 06100	1
	8060001112	WASHER Ø08	1
	8060004218	SPLIT WASHER Ø06	1
	TH-NHUA000-RSDPTD-00511	WEATHERSTRIP	1

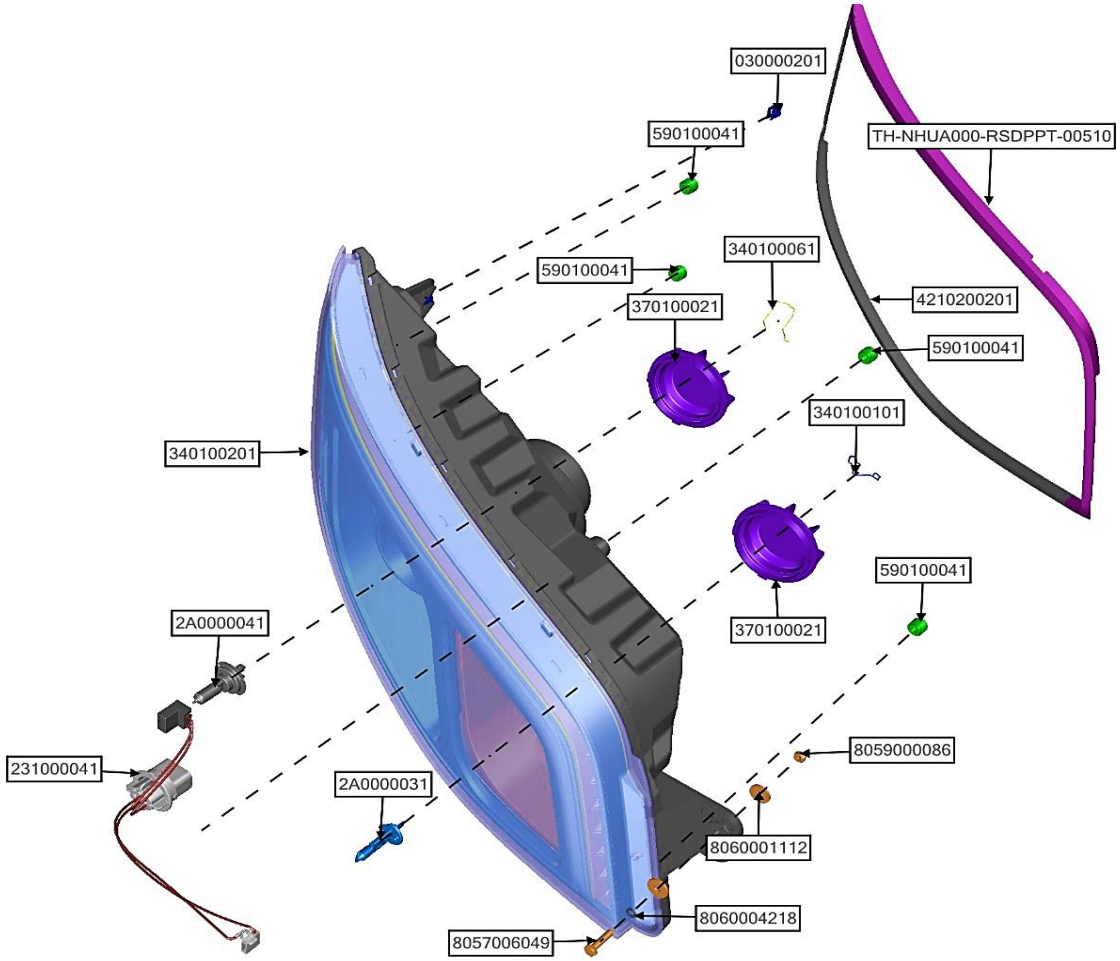

NAME_ASSB	CODE_PART NO	NAME	QTY
LAMP ASSY-HEAD RH	2A0000031	BULB	1
	2A0000041	BULB	1
	030000201	CLIP	1
	231000041	WIRING ASSY	1
	340100061	CLAMP BULD	1
	340100101	CLAMP BULD	1
	340100201	COVER LAMP RH	1
	TH-NHUA000-RSDPPT-00510	WEATHERSTRIP	1

NAME_ASSB	CODE_PART NO	NAME	QTY
LAMP ASSY-HEAD RH	370100021	COVER DUST	2
	590100041	RETAINER	4
	4210200201	WEATHERSTRIP	1
	8057006049	BOLT	1
	8059000086	NUT 06100	1
	8060001112	WASHER Ø08	1
	8060004218	SPLIT WASHER Ø06	1

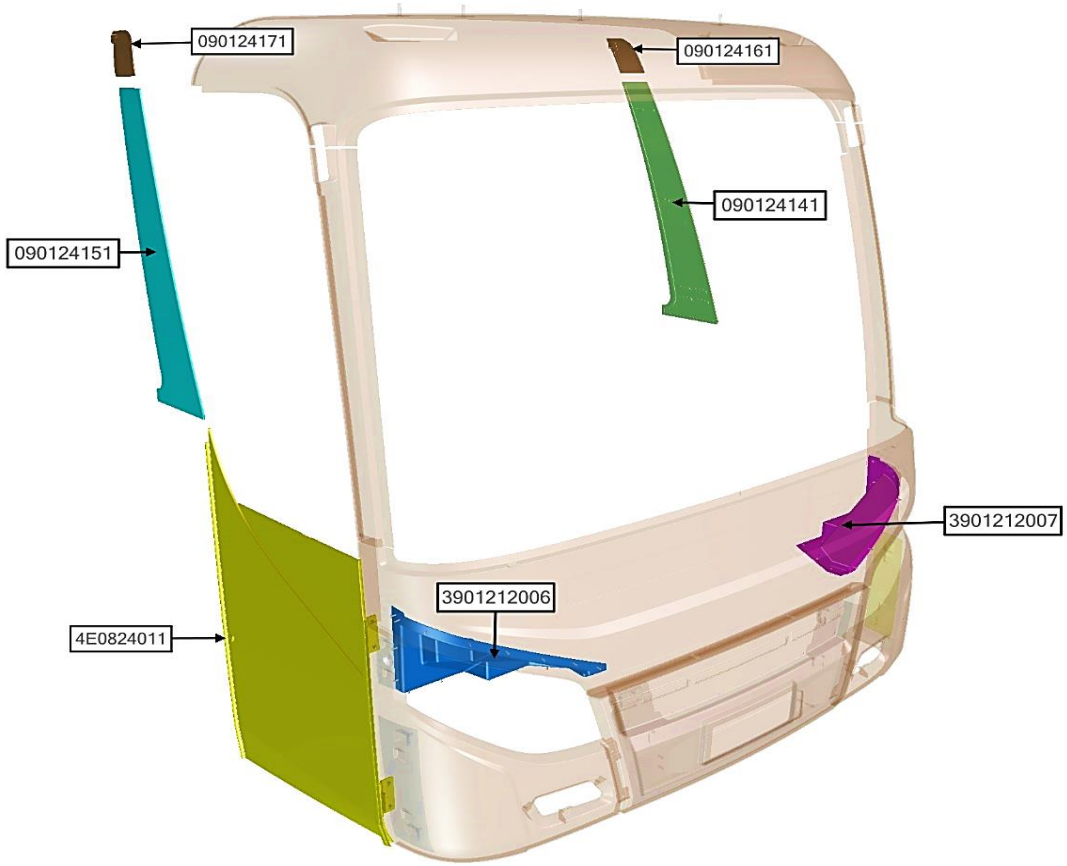

NAME_ASSB	CODE_PART NO	NAME	QTY
COVER - ASSY	090124161	COVER	1
	090124171	COVER	1
	090124141	COVER	1
	090124151	COVER	1
	3901212007	FRAME - RADIO SIDE LH	1
	3901212006	FRAME - RADIO SIDE RH	1
	4E0824011	HINGE - ASSY	1

NAME_ASSB	CODE_PART NO	NAME	QTY
COVER - ASSY			

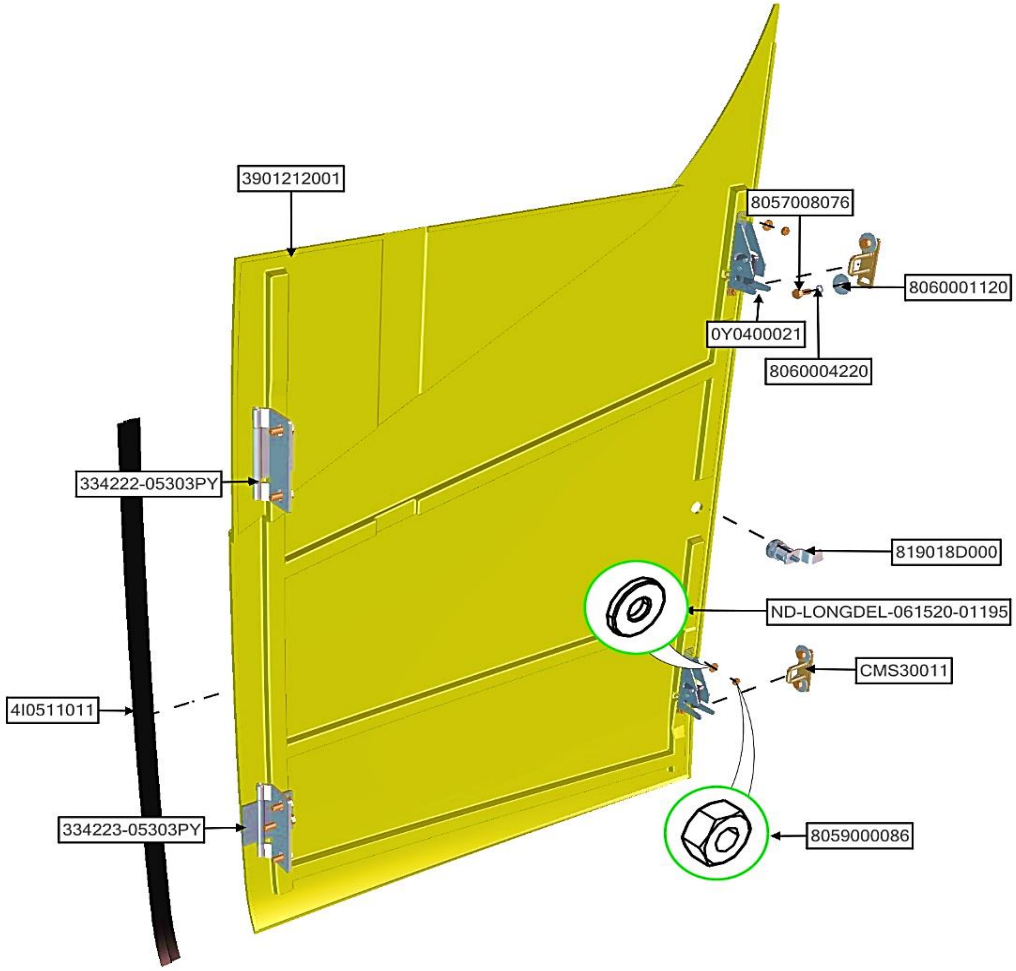

NAME_ASSB	CODE_PART NO	NAME	QTY
HINGE - ASSY	8057008076	BOLT 08020125	1
	3901212001	FLAP FRONT	1
	0Y0400021	LOCK FLAP FRONT	2
	334222-05303PY	HINGE	1
	334223-05303PY	HINGE	1
	CMS30011	LOCK - ASSY	2
	4I0511011	WEATHERSTRIP	1

NAME_ASSB	CODE_PART NO	NAME	QTY
HINGE - ASSY	ND-LONGDEL-061520-01195	WASHER Ø06	1
	8060001120	WASHER Ø08	1
	8059000086	NUT 06100	1
	8060004220	SPLIT WASHER Ø08	1
	819018D000	LOCK	1

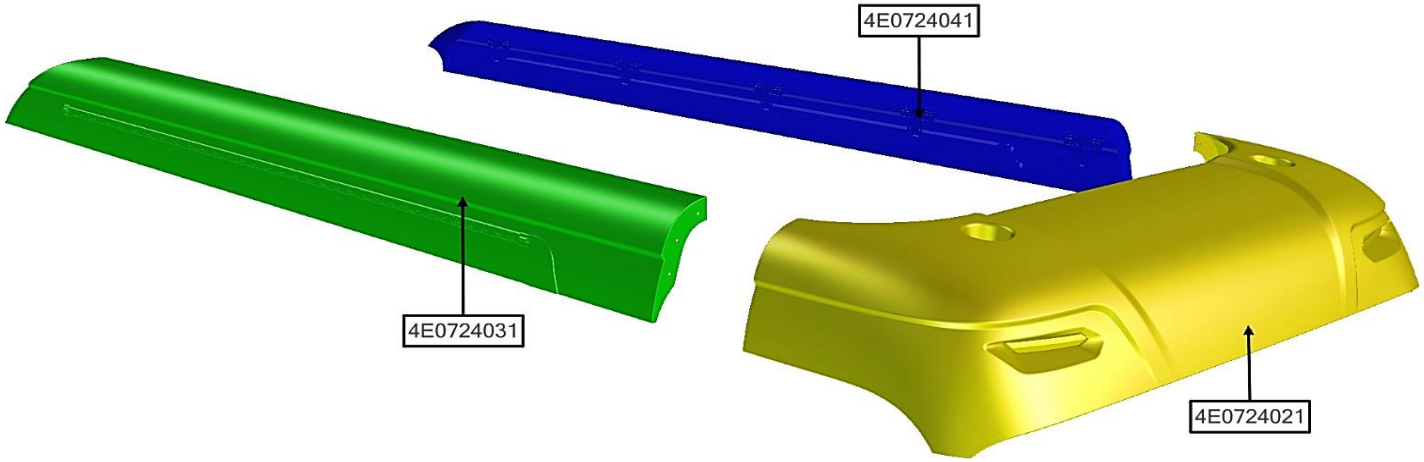

NAME_ASSB	CODE_PART NO	NAME	QTY
SPOILER - ASSY	4E0724031	FRONT SPOLIER - ASSY - RH	1
	4E0724041	FRONT SPOLIER - ASSY - LH	1
	4E0724021	FRONT SPOLIER - ASSY	1

NAME_ASSB	CODE_PART NO	NAME	QTY
SPOILER - ASSY			

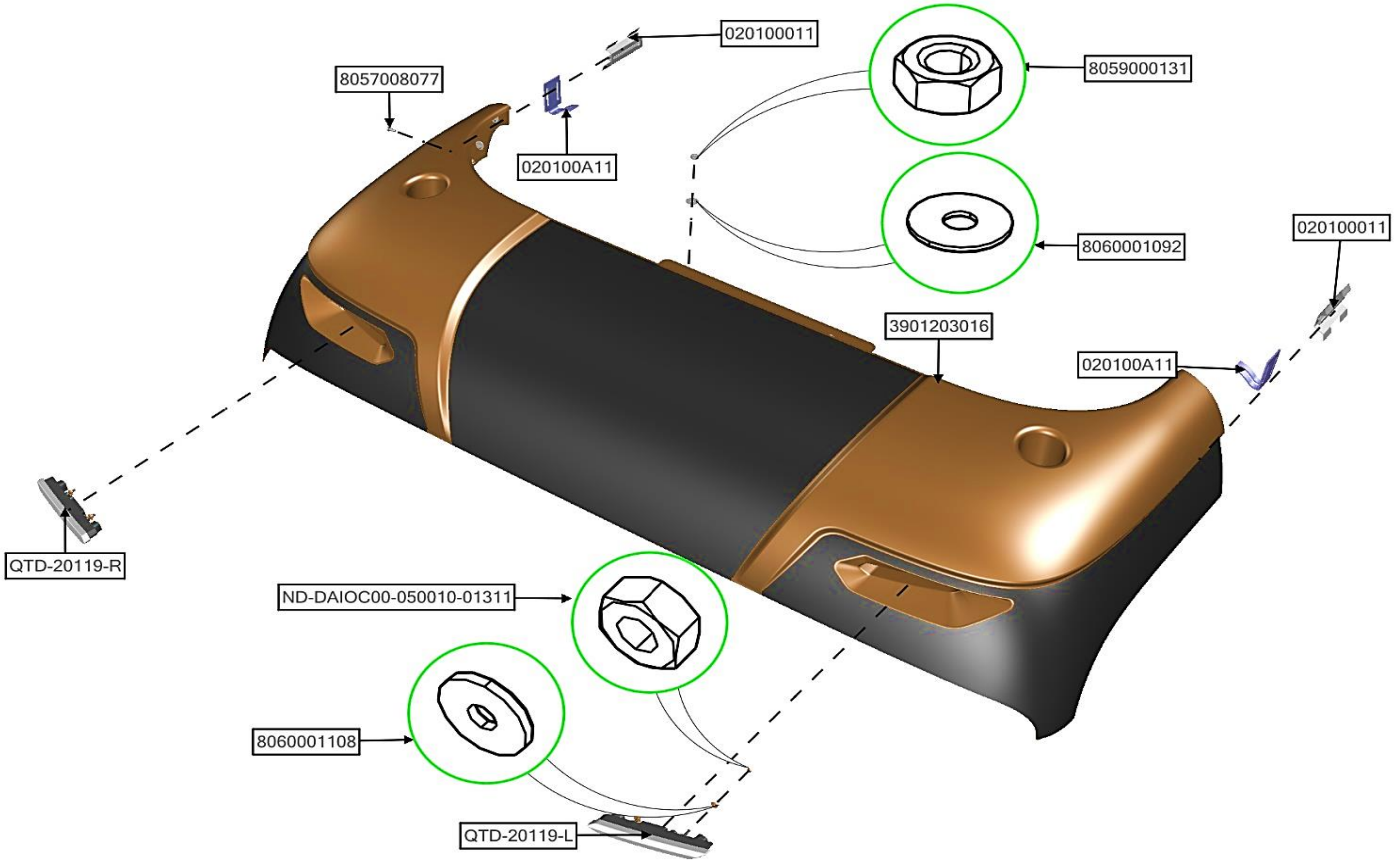

NAME_ASSB	CODE_PART NO	NAME	QTY
FRONT SPOLIER - ASSY	020100A11	BRACKET	2
	020100011	BRACKET	2
	3901203016	FRONT SPOILER	1
	8057008077	FRONT SPOLIER	1
	8059000131	NUT 10150	1
	8060001092	WASHER Ø10	1
	8060001108	WASHER Ø08	1

NAME_ASSB	CODE_PART NO	NAME	QTY
FRONT SPOLIER - ASSY	ND-DAIOC00-050010-01311	NUT 05100	1
	QTD-20119-L	SPOLIER FRONT LAMP LH	1
	QTD-20119-R	SPOLIER FRONT LAMP RH	1

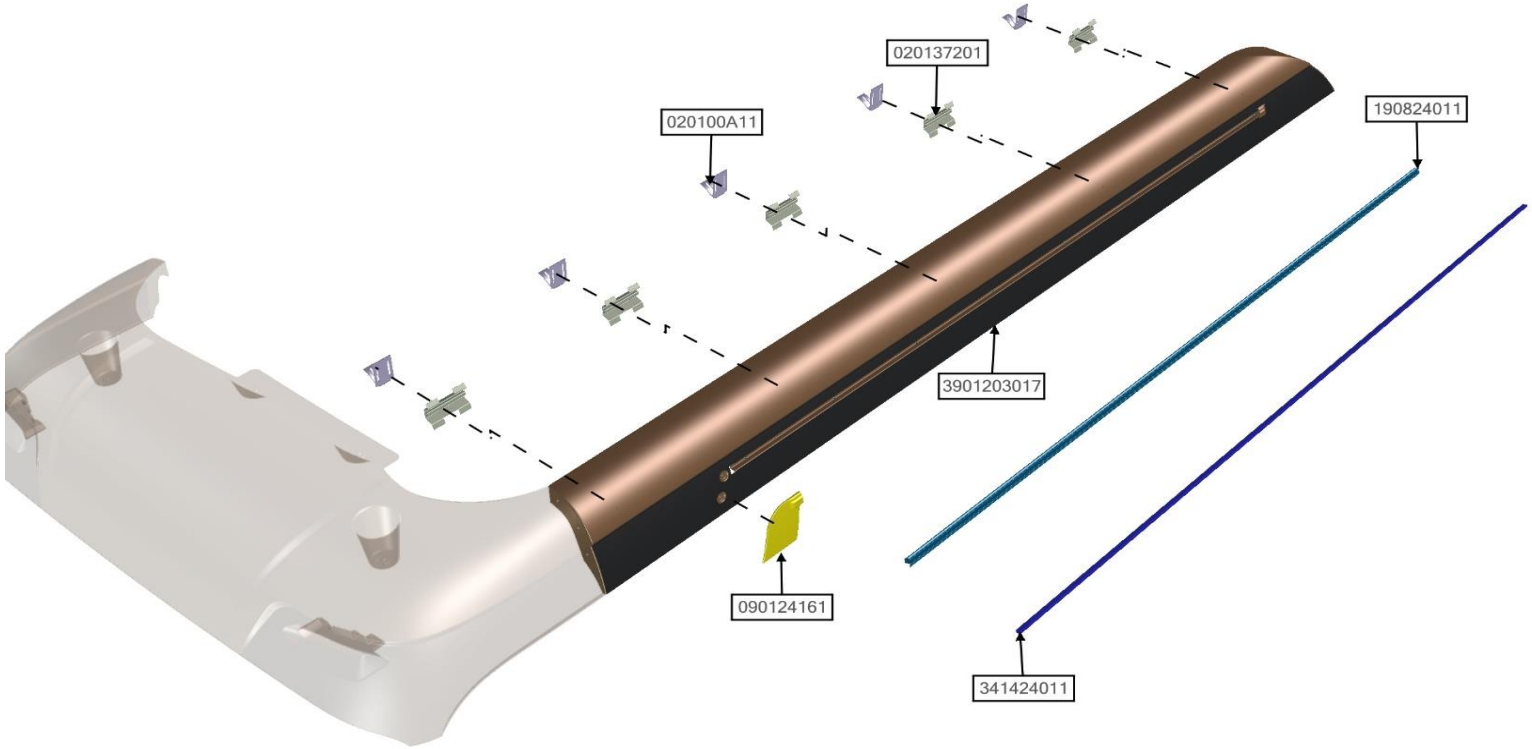

NAME_ASSB	CODE_PART NO	NAME	QTY
FRONT SPOLIER - ASSY - LH	090124161	COVER	1
	020137201	BRACKET	5
	020100A11	BRACKET	5
	190824011	MOULDING	1
	3901203017	SPOLIER - LH	1
	341424011	LED WIRE	1

NAME_ASSB	CODE_PART NO	NAME	QTY
FRONT SPOLIER - ASSY - LH			

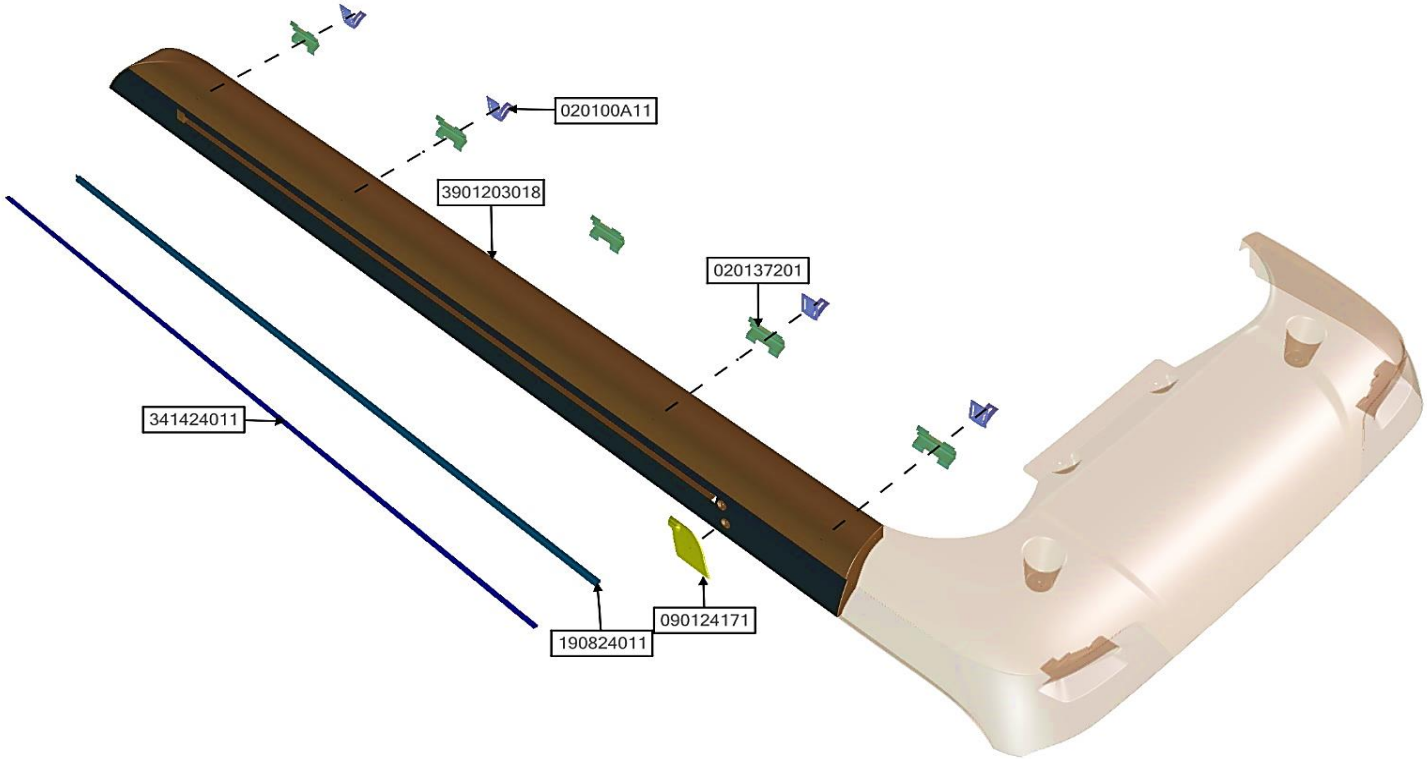

NAME_ASSB	CODE_PART NO	NAME	QTY
FRONT SPOLIER - ASSY - RH	090124171	COVER	1
	020137201	BRACKET	5
	020100A11	BRACKET	4
	190824011	MOULDING	1
	3901203018	SPOLIER - RH	1
	341424011	LED WIRE	1

NAME_ASSB	CODE_PART NO	NAME	QTY
FRONT SPOLIER - ASSY - RH			

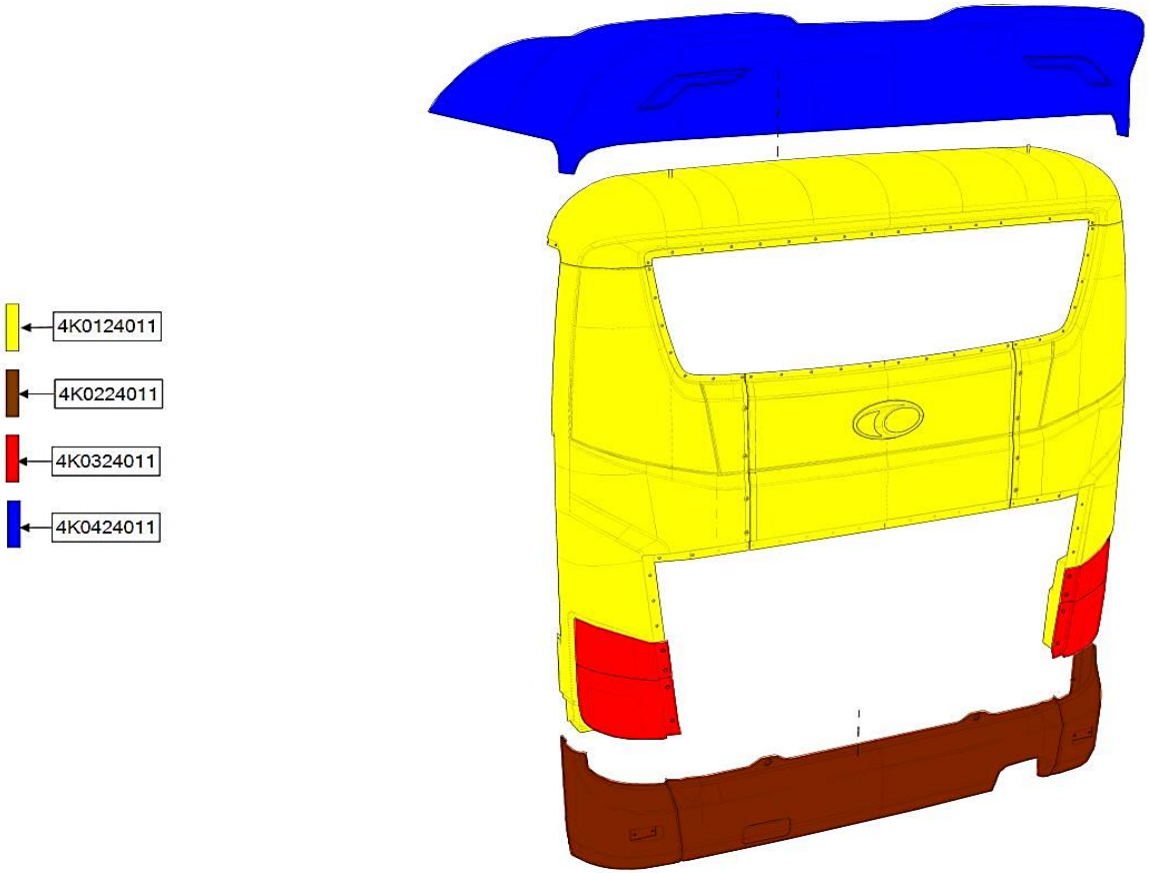

NAME_ASSB	CODE_PART NO	NAME	QTY
REAR	4K0124011	REAR MIDDLE PANEL-- ASSY	1
	4K0224011	BUMMER - ASSY	1
	4K0324011	LAMP REAR-- ASSY	1
	4K0424011	REAR SPOLIER - ASSY	1

NAME_ASSB	CODE_PART NO	NAME	QTY
REAR			

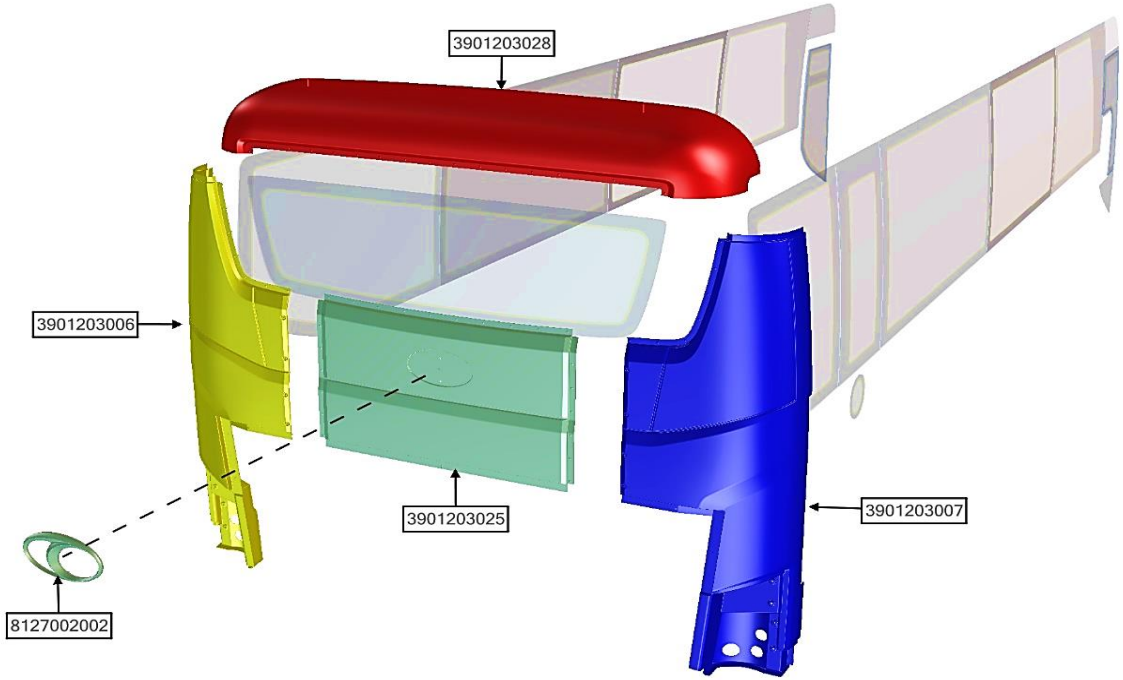

NAME_ASSB	CODE_PART NO	NAME	QTY
REAR MIDDLE PANEL-- ASSY	8127002002	LOGO 280X150	1
	3901203006	PILLAR COVER - ASSY	1
	3901203007	PILLAR COVER - ASSY	1
	3901203028	REAR ROOF PANEL	1
	3901203025	REAR MIDDLE PANEL	1

NAME_ASSB	CODE_PART NO	NAME	QTY
REAR MIDDLE PANEL-- ASSY			

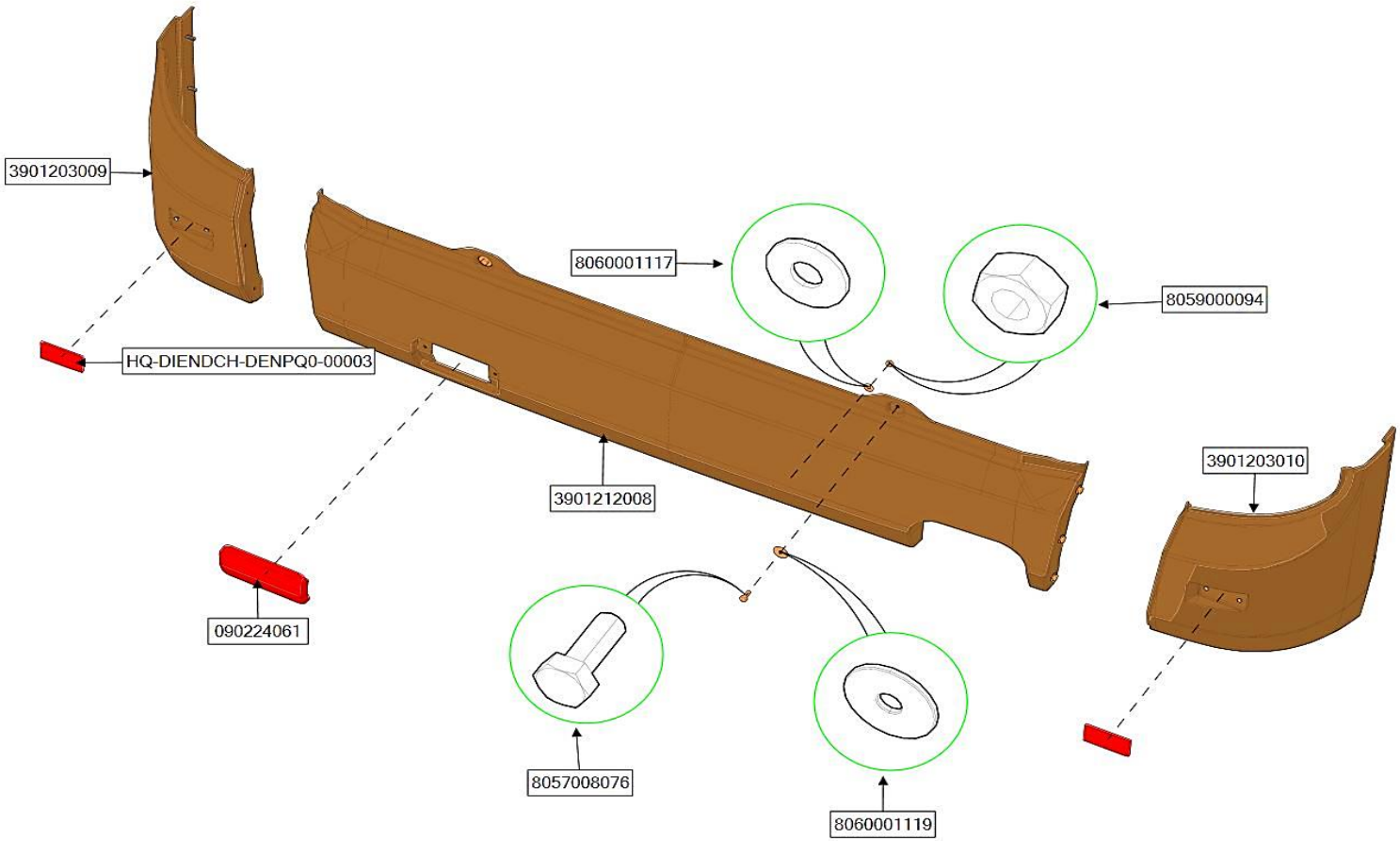

NAME_ASSB	CODE_PART NO	NAME	QTY
BUMMER - ASSY	8059000094	BOLT 08125	1
	8060001117	WASHER Ø08	1
	8060001119	WASHER Ø08	1
	HQ-DIENDCH-DENPQ0-00003	LAMP	2
	090224061	TOWING HOOK	1
	3901203009	BUMMER ASSY-RR,CORNER,LH	1
	3901203010	BUMMER ASSY-RR,CORNER,RH	1

NAME_ASSB	CODE_PART NO	NAME	QTY
BUMMER - ASSY	3901212008	REAR MIDDLE BUMPER	1
	8057008076	BOLT 08020125	1

NAME_ASSB	CODE_PART NO	NAME	QTY
LAMP REAR--ASSY	340200091	LAMP REAR RH - ASSY	1
	340200111	LAMP REAR LH - ASSY	1

NAME_ASSB	CODE_PART NO	NAME	QTY
LAMP REAR--ASSY			

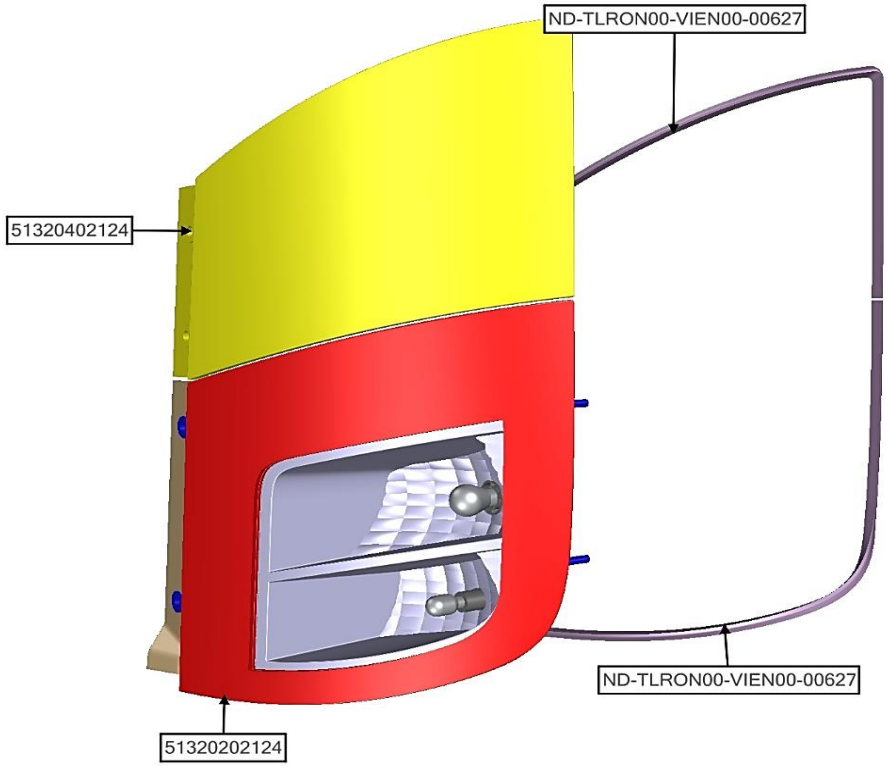

NAME_ASSB	CODE_PART NO	NAME	QTY
LAMP REAR LH ASSY	51320202124	LAMP REAR RH	1
	51320402124	SAFETY REFLECTOR	1
	ND-TLRON00-VIEN00-00627	RUBBER-SEALING	1
	ND-TLRON00-VIEN00-00627	RUBBER-SEALING	1

NAME_ASSB	CODE_PART NO	NAME	QTY
LAMP REAR LH ASSY			

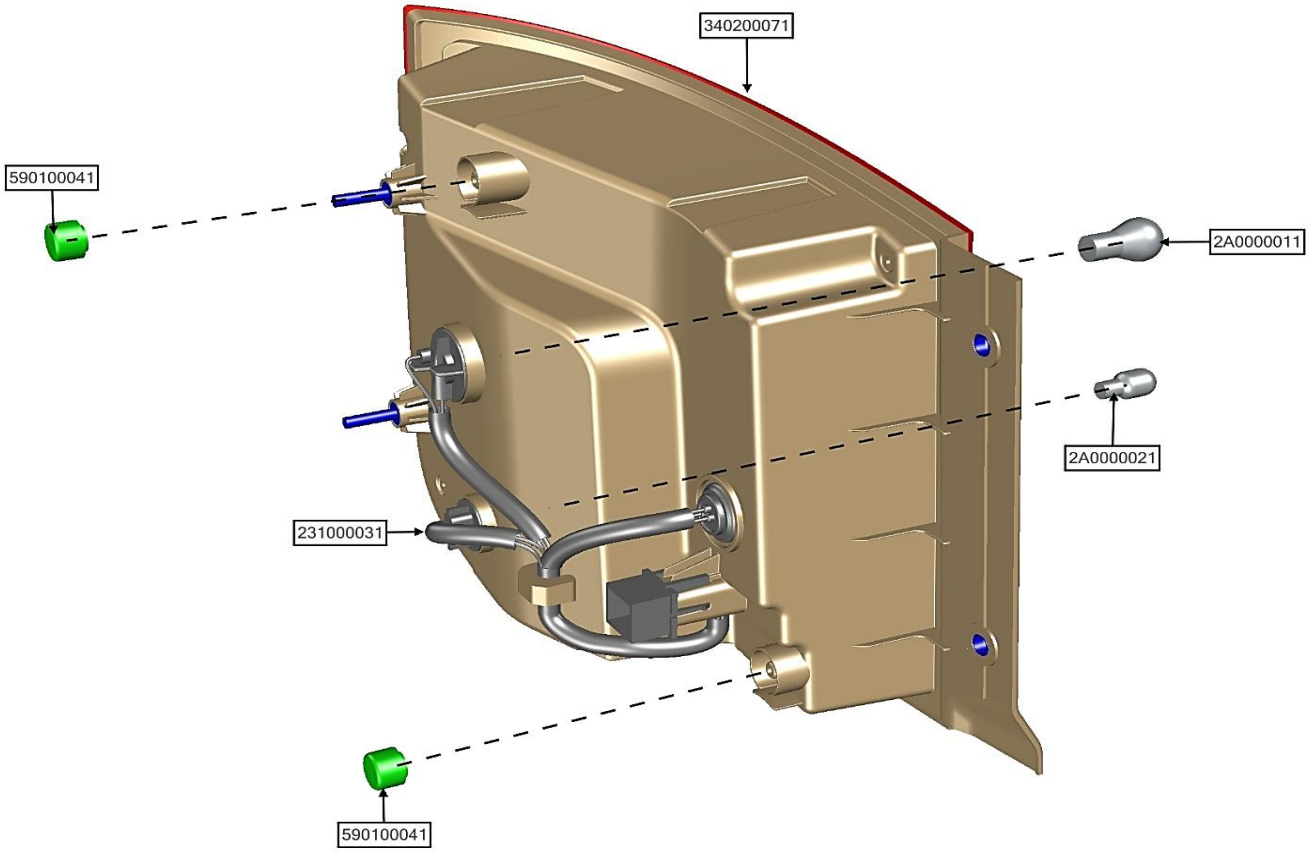

NAME_ASSB	CODE_PART NO	NAME	QTY
LAMP REAR RH	2A0000011	BULD	1
	2A0000021	BULD	1
	231000031	WIRING ASSY	1
	340200071	COVER LAMP REAR RH	1
	590100041	RETAINER	2

NAME_ASSB	CODE_PART NO	NAME	QTY
LAMP REAR RH			

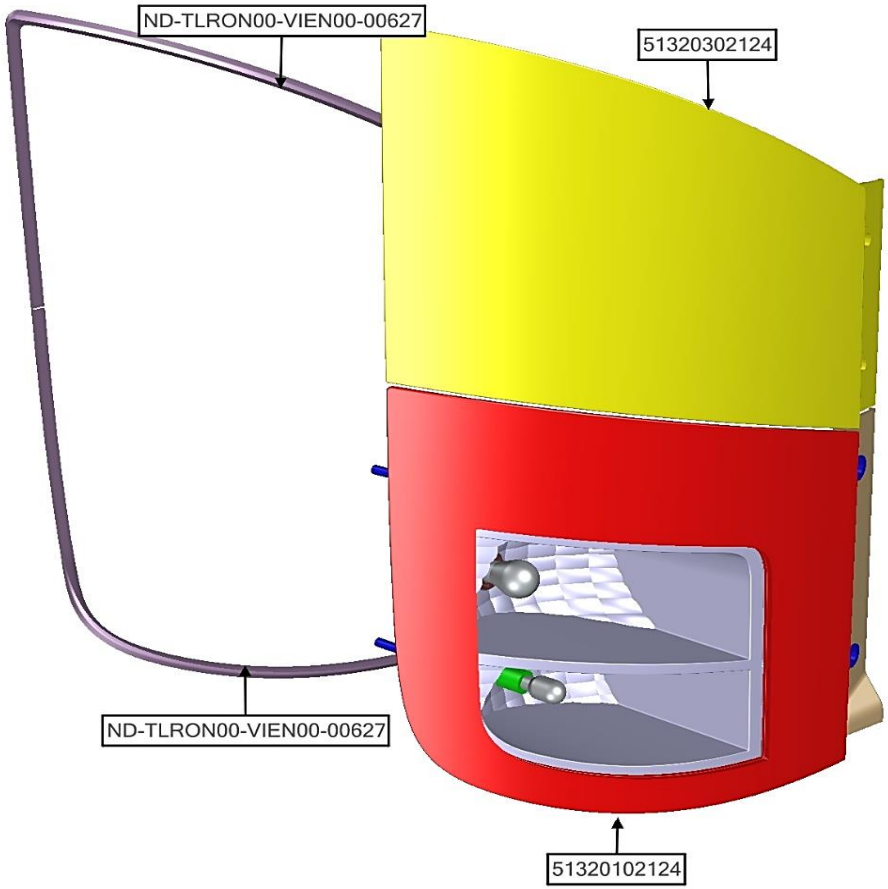

NAME_ASSB	CODE_PART NO	NAME	QTY
LAMP REAR RH ASSY	51320102124	LAMP REAR LH	1
	51320302124	SAFETY REFLECTOR	1
	ND-TLRON00-VIEN00-00627	RUBBER-SEALING	1
	ND-TLRON00-VIEN00-00627	RUBBER-SEALING	1

NAME_ASSB	CODE_PART NO	NAME	QTY
LAMP REAR RH ASSY			

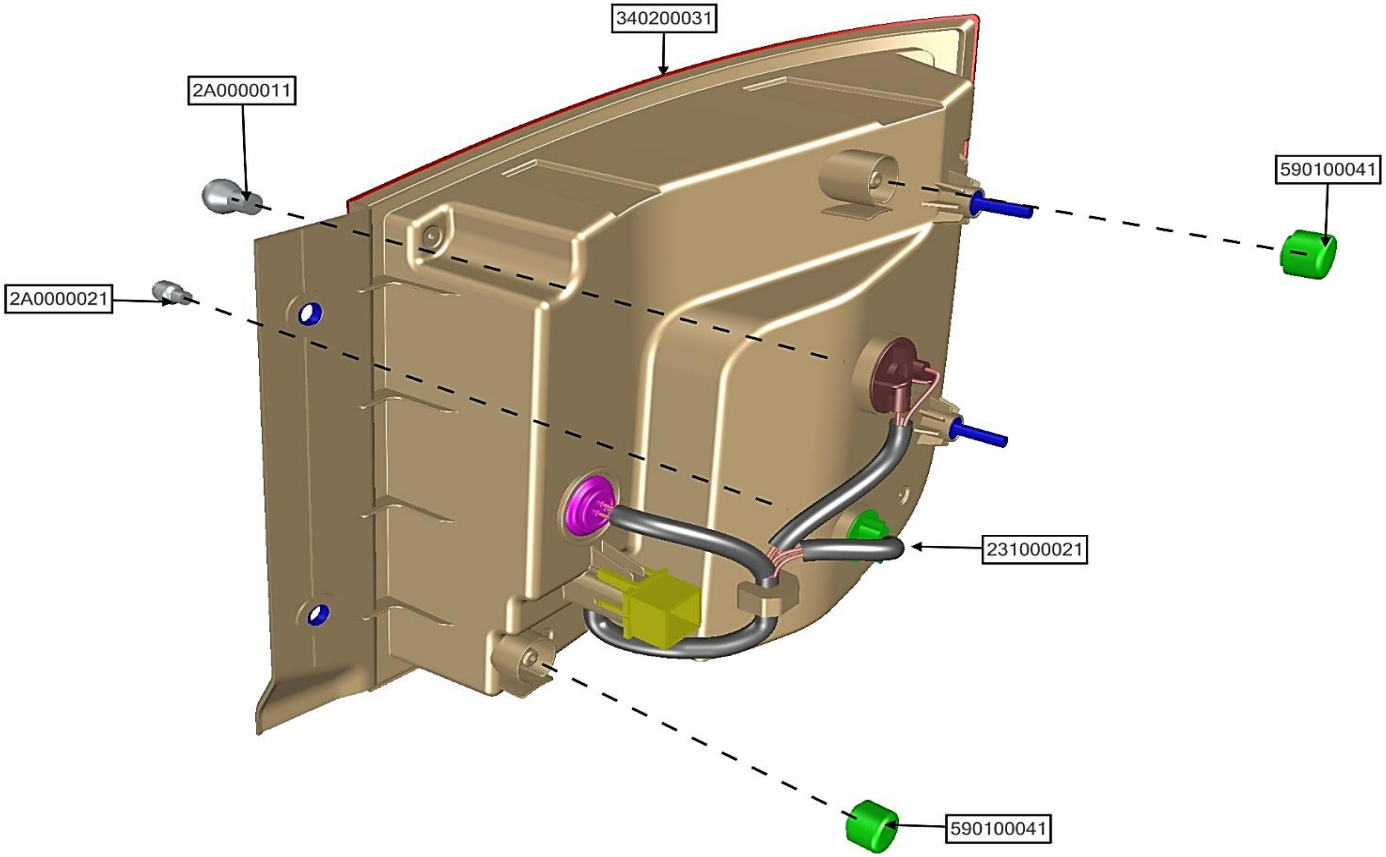

NAME_ASSB	CODE_PART NO	NAME	QTY
LAMP REAR LH	2A0000011	BULD	1
	2A0000021	BULD	1
	231000021	WIRING ASSY	1
	340200031	COVER LAMP REAR LH	1
	590100041	RETAINER	2

NAME_ASSB	CODE_PART NO	NAME	QTY
LAMP REAR LH			

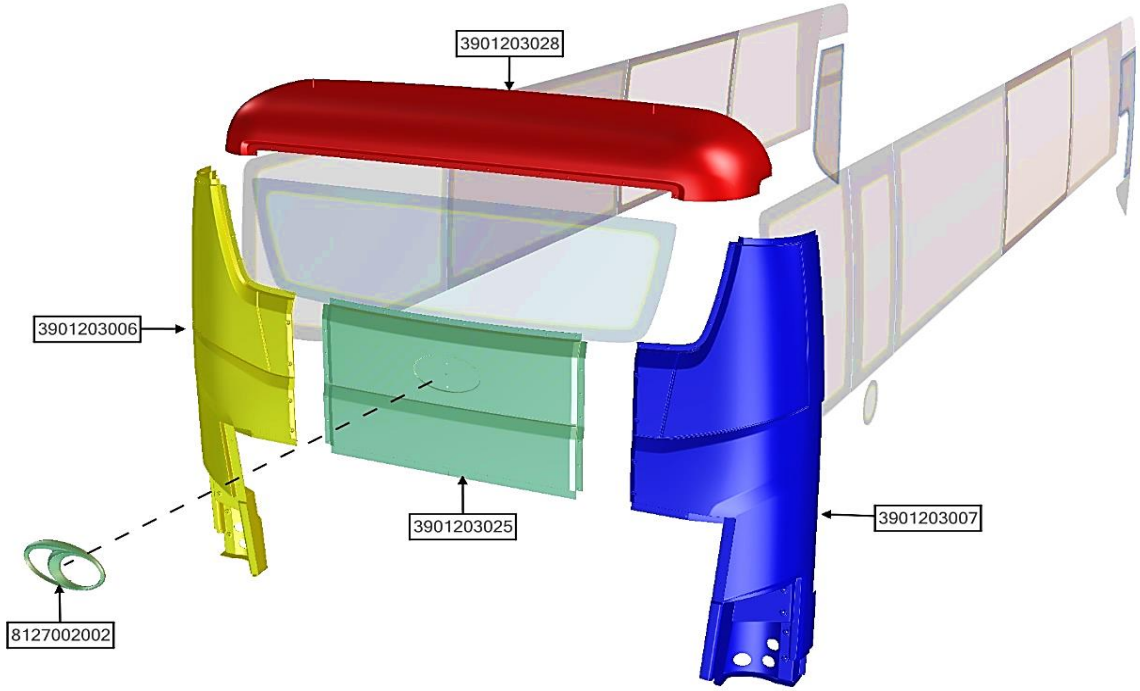

NAME_ASSB	CODE_PART NO	NAME	QTY
REAR MIDDLE PANEL-- ASSY	923108A100	LAMP	2
	3901202010	REAR MIDDLE PANEL	1
	3901202011	PILLAR COVER	1
	3901202012	PILLAR COVER	1
	3901216003	REAR ROOF PANEL	1
	8071000078	SCREW 0520	1
	8127002002	LOGO 280X150	1

NAME_ASSB	CODE_PART NO	NAME	QTY
REAR MIDDLE PANEL-- ASSY			

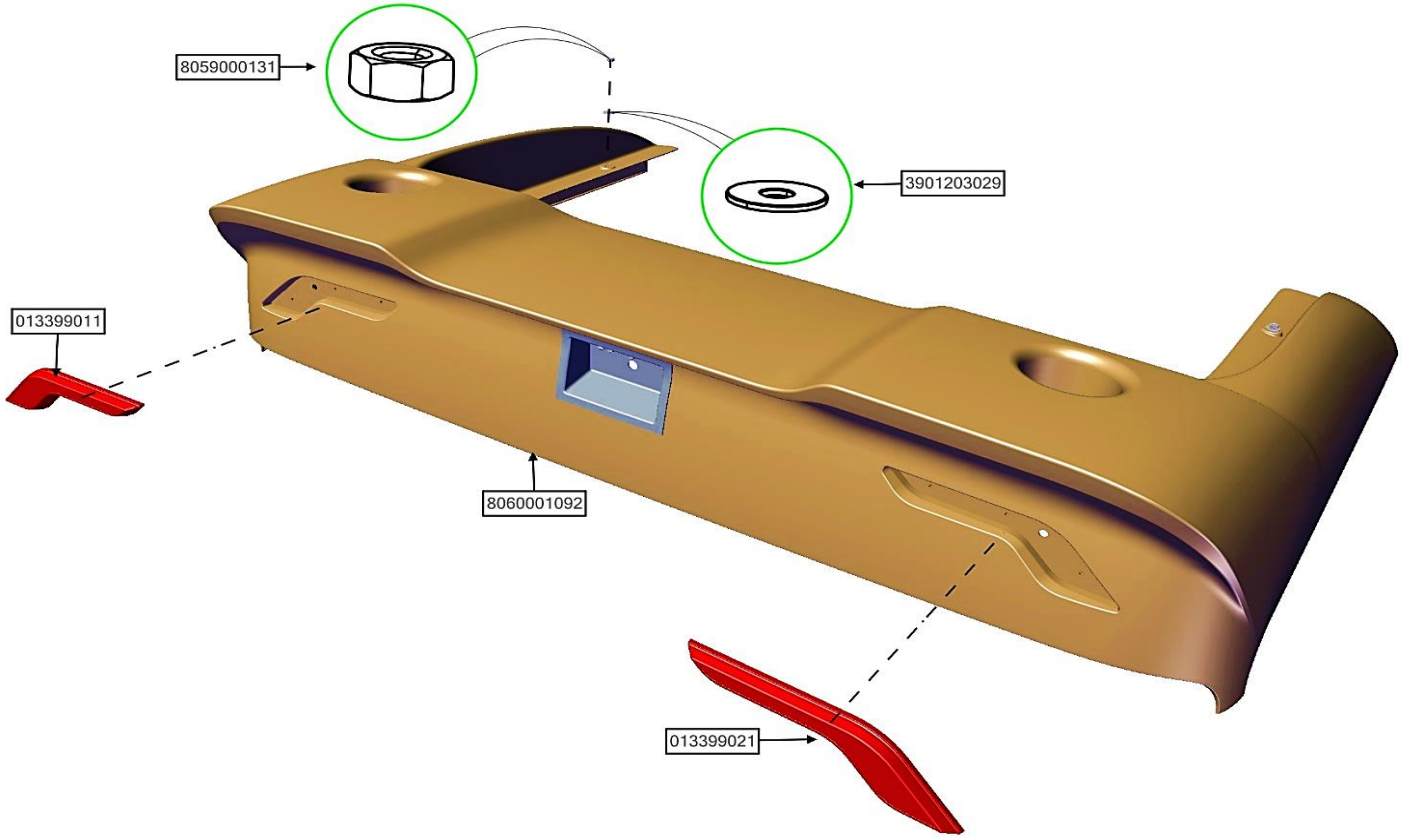

NAME_ASSB	CODE_PART NO	NAME	QTY
REAR SPOLIER - ASSY	013399011	LAMP REAR SPOILER LH	1
	013399021	LAMP REAR SPOILER RH	1
	8060001092	REAR SPOLIER	1
	390103029	WASHER Ø10	6
	80509000131	NUT 10150	6

NAME_ASSB	CODE_PART NO	NAME	QTY
REAR SPOLIER - ASSY			

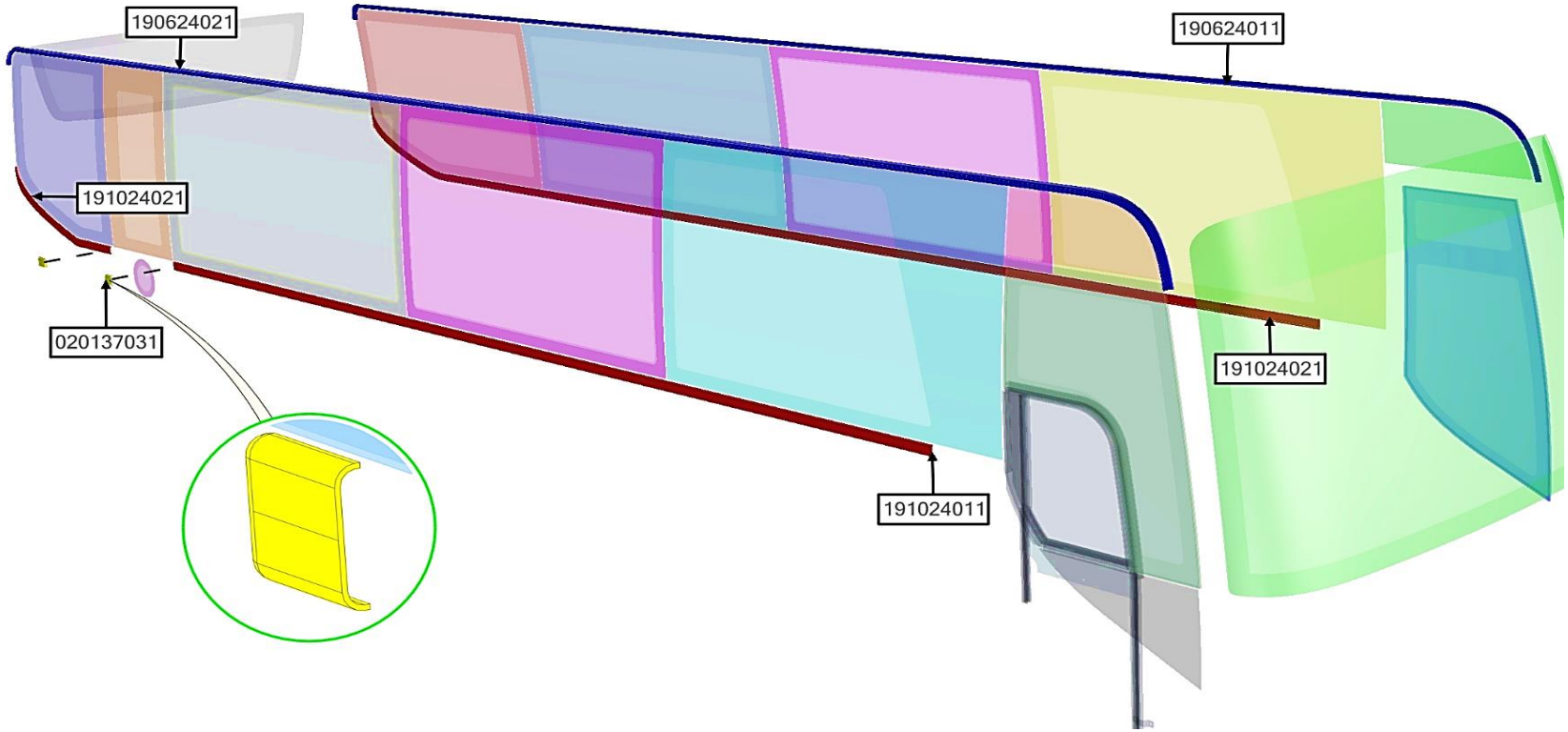

NAME_ASSB	CODE_PART NO	NAME	QTY
SIDE BODY	190624011	MOULDING	1
	190624021	MOULDING	1
	191024021	MOULDING	1
	191024021	MOULDING	1
	191024011	MOULDING	1
	20137031	COVER	2

NAME_ASSB	CODE_PART NO	NAME	QTY
SIDE BODY			

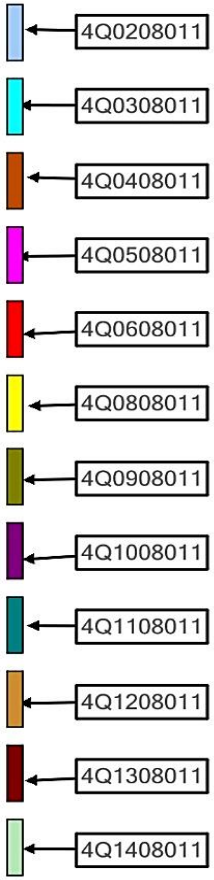

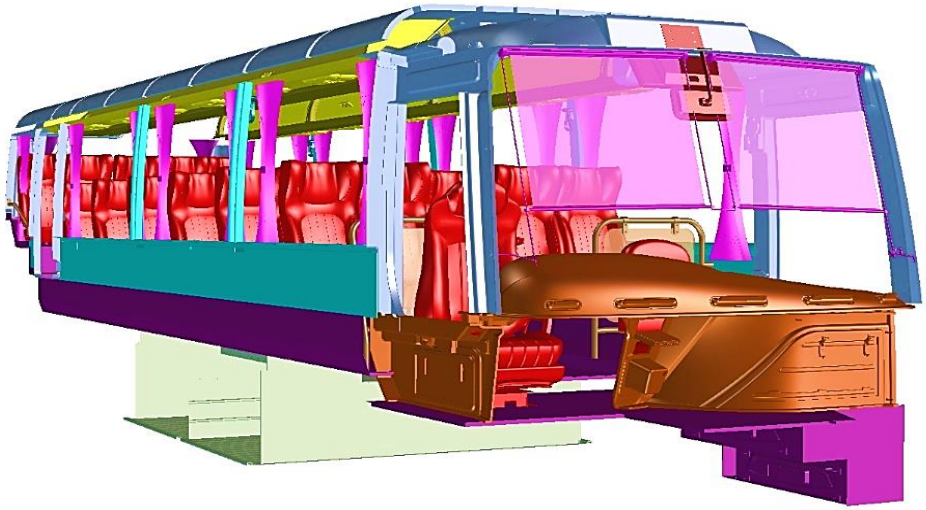

NAME_ASSB	CODE_PART NO	NAME	QTY
INTERIOR	4Q1108011	SAFETY SYSTEM	1
	4Q1008011	FLOOR - ASSY	1
	4Q0908011	LUGGAGE SHELVES - ASSY	1
	4Q0808011	WIND DUCT - ASSY	1
	4Q0608011	SEATS	1
	4Q0508011	CURTAIN - ASSY	1
	4Q0408011	DASHBOARD - ASSY	1

NAME_ASSB	CODE_PART NO	NAME	QTY
INTERIOR	4Q0308011	SIDE BODY	1
	4Q1408011	LUGGAGE COMPARTMENT	1
	4Q1308011	FUNCTIONAL SYSTEM	1
	4Q1208011	HANDRAIL - ASSY	1
	4Q0208011	CEILING	1

NAME_ASSB	CODE_PART NO	NAME	QTY
CEILING	4Q0208041	MIDDLE CEILING	1
	4Q0208031	REAR HEADLINING - ASSY	1
	4Q0208021	FRONT HEADLINING - ASSY	1

NAME_ASSB	CODE_PART NO	NAME	QTY
CEILING			

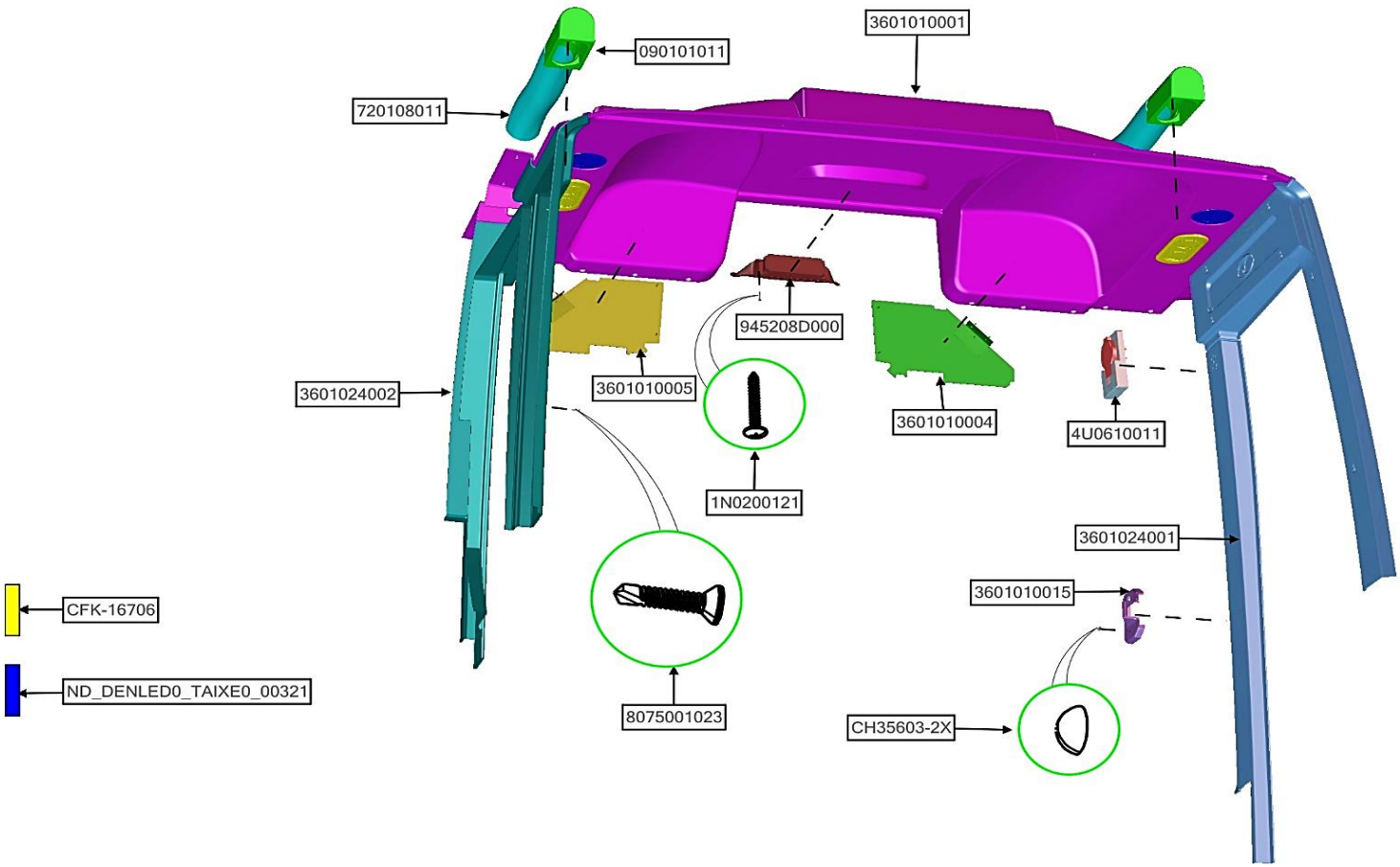

NAME_ASSB	CODE_PART NO	NAME	QTY
FRONT HEADLINING - ASSY	4U0610011	EMERGENCY VALVES - ASSY	1
	3601010005	RH LUGGAGE SHELVES COVER	1
	3601010004	LH LUGGAGE SHELVES COVER	1
	CH35603-2X	SCREW COVER	1
	CFK-16706	DOUBLE WIND DOOR	2
	3601010001	FRONT HEADLINING	1
	3601010015	COVER	1
	3601024001	PILLAR COVER	1

NAME_ASSB	CODE_PART NO	NAME	QTY
FRONT HEADLINING - ASSY	8075001023	CREW 0420	1
	1N0200121	SCREW 0420	1
	ND_DENLED0_TAIXE0_00321	HEADLINING LIGHTS	2
	945208D000	CLOCK	1
	720108011	FLEXIBLE PIPE 01	2
	090101011	CONNECTING COVER	2
	3601024002	PILLAR COVER	1

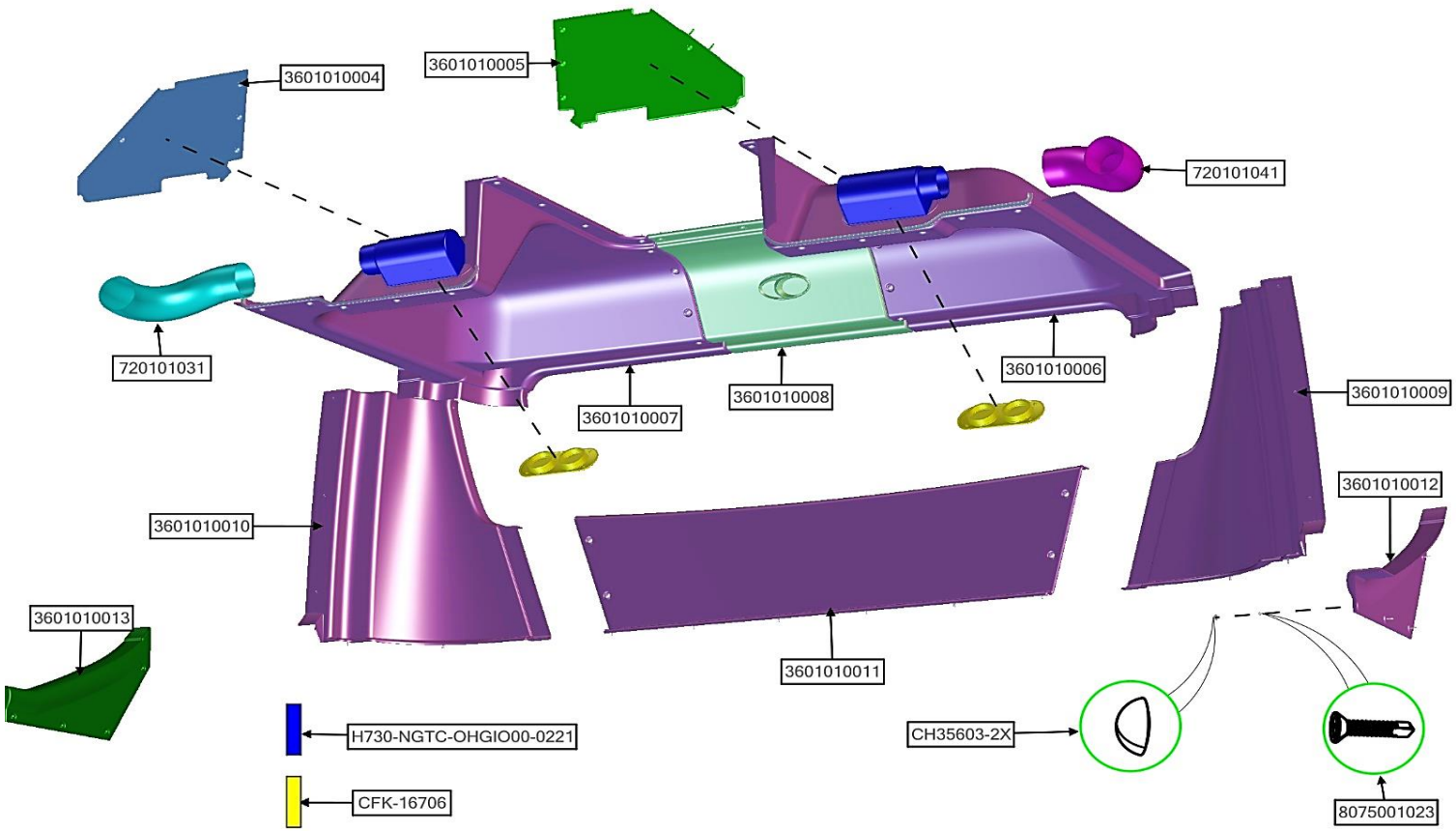

NAME_ASSB	CODE_PART NO	NAME	QTY
REAR HEADLINING - ASSY	CFK-16706	AIR-CONDITIONING DOOR	2
	H730-NGTC-OHGIO00-0221	CONNECTING COVER	2
	3601010013	PILLAR COVER	1
	3601010008	REAR HEALING COVER MID	1
	CH35603-2X	SCREW COVER	1
	3601010007	REAR HEALING COVER RH	1
	3601010006	REAR HEALING COVER LH	1
	3601010012	PILLAR COVER	1

NAME_ASSB	CODE_PART NO	NAME	QTY
REAR HEADLINING - ASSY	3601010004	RH LUGGAGE SHELVES COVER	1
	3601010005	LH LUGGAGE SHELVES COVER	1
	8075001023	CREW 0420	1
	720101041	FLEXIBLE PIPE 03	1
	720101031	FLEXIBLE PIPE 02	1
	3601010009	PILLAR COVER - ASSY	1
	3601010010	PILLAR COVER - ASSY	1
	3601010011	PILLAR COVER - ASSY	1

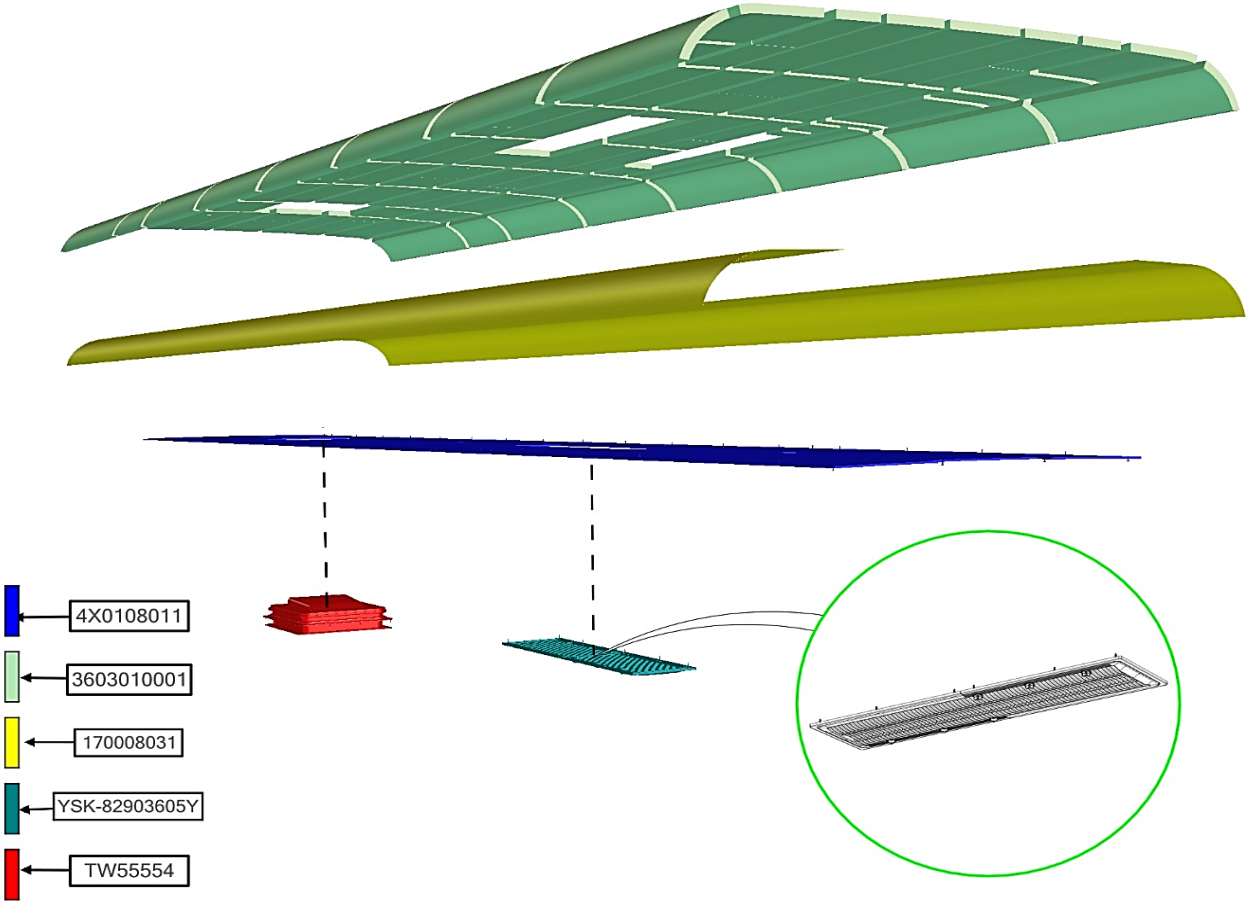

NAME_ASSB	CODE_PART NO	NAME	QTY
MIDDLE CEILING	YSK-82903605Y	AIR-CONDITIONIN GRID	2
	TW55554	FAN	1
	170008031	ALUMIUM INSULATION	1
	3603010001	CEILING INSULATION	1
	4X0108011	FLOORING CELING - ASSY	1

NAME_ASSB	CODE_PART NO	NAME	QTY
MIDDLE CEILING			

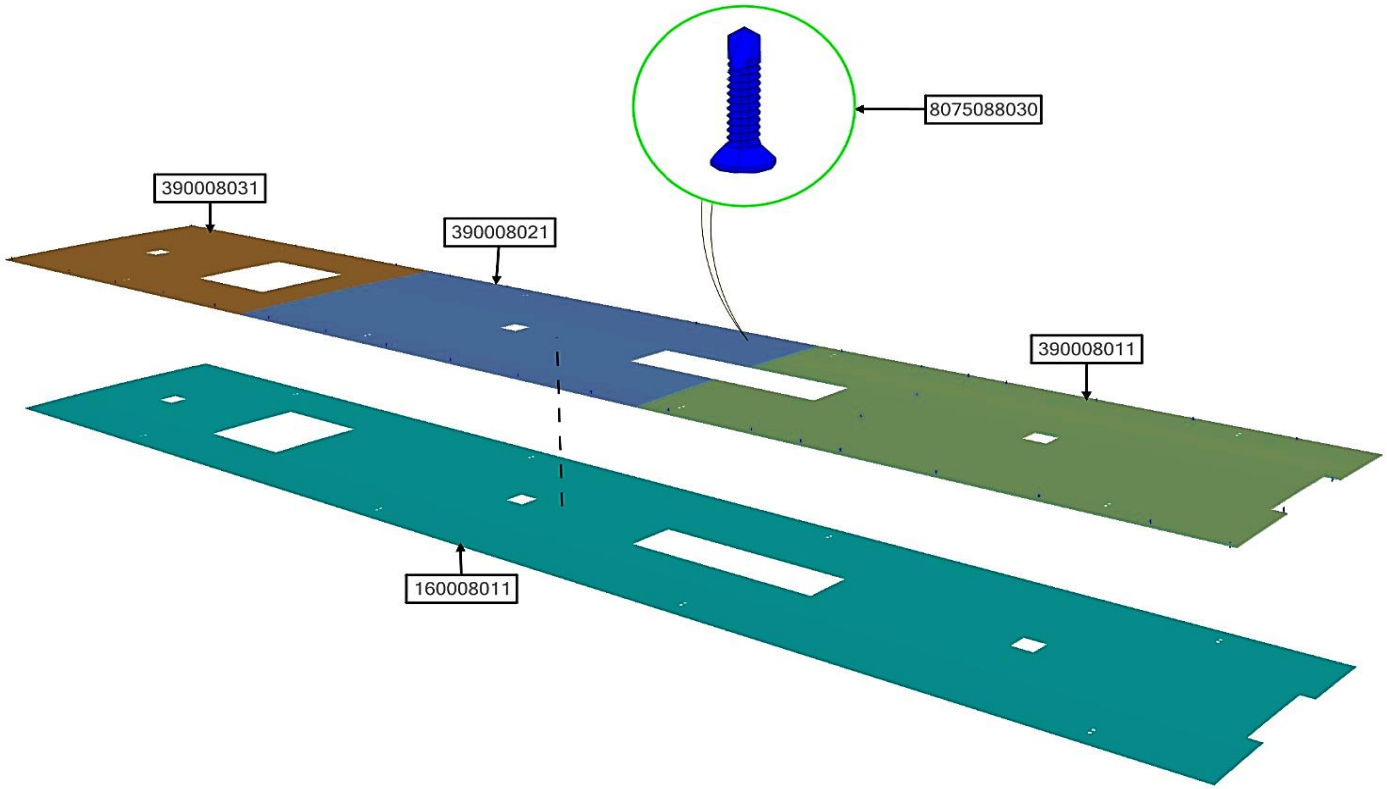

NAME_ASSB	CODE_PART NO	NAME	QTY
FLOORING CELING - ASSY	8075088030	CREW 0420	43
	160008011	CEILING VENEER	1
	390008031	FLOORING 03	1
	390008021	FLOORING 02	1
	390008011	FLOORING 01	1

NAME_ASSB	CODE_PART NO	NAME	QTY
FLOORING CELING - ASSY			

NAME_ASSB	CODE_PART NO	NAME	QTY
SIDE BODY	4Q0308031	RH SIDE BODY	1
	4Q0308021	RH SIDE BODY	1

NAME_ASSB	CODE_PART NO	NAME	QTY
SIDE BODY			

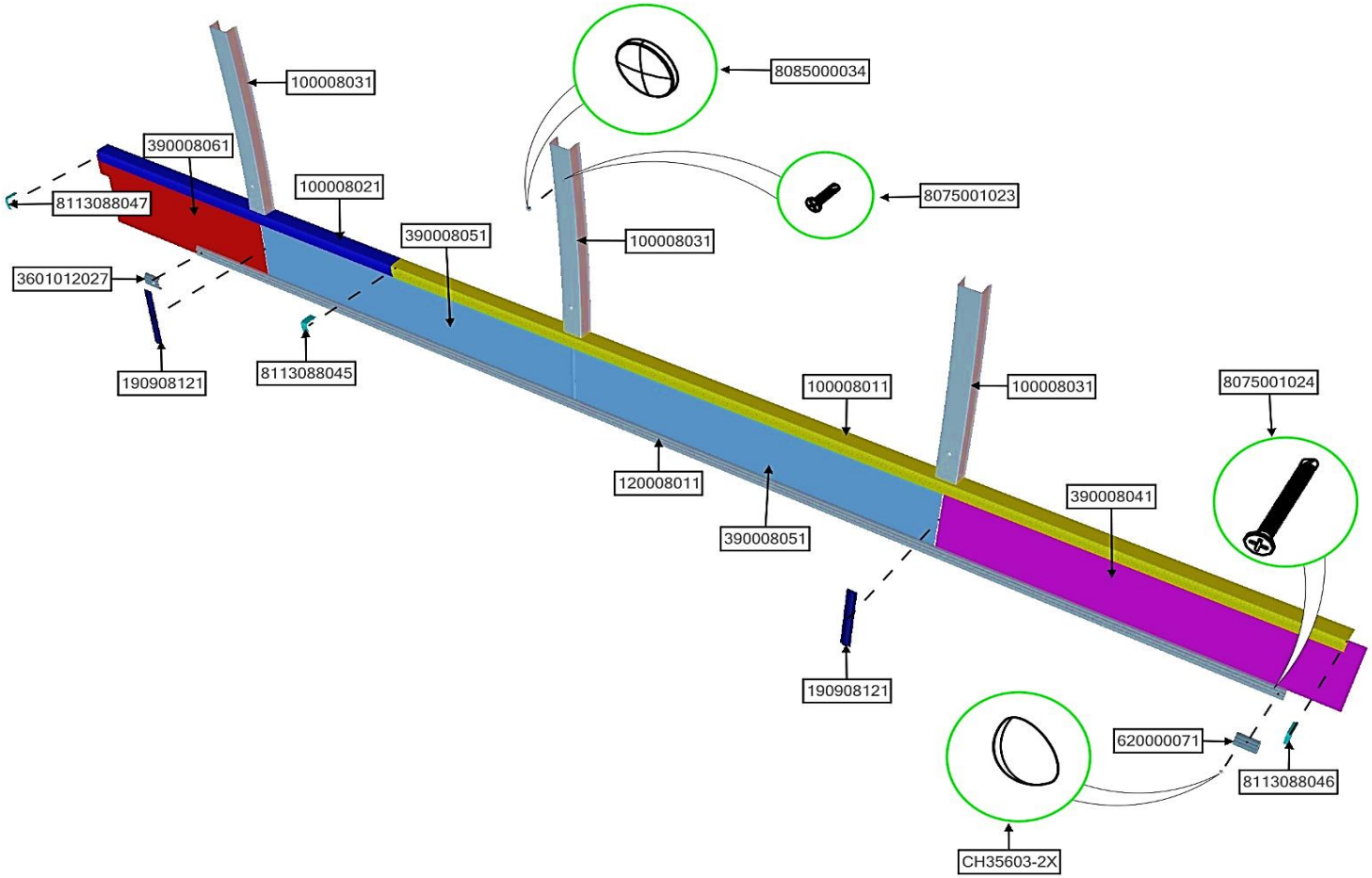

NAME_ASSB	CODE_PART NO	NAME	QTY
RH SIDE BODY	3601012027	SEAT RAIL COVER	1
	620000071	SEAT RAIL COVER 01	1
	8085000034	SCREW COVER	1
	CH35603-2X	SCREW COVER	1
	190908121	MOULDING	2
	120008011	SIDE SEAT RAIL	1
	390008041	INTERIOR PANEL 01	1

NAME_ASSB	CODE_PART NO	NAME	QTY
RH SIDE BODY	390008051	LH INTERIOR PANEL 02	2
	390008061	INTERIOR PANEL 02	1
	8075001023	CREW 0420	1
	8075001024	CREW 0440	1
	8113088045	MIDDLE COVER CONNECTOR	1
	8113088046	RH HORIZONTAL COVER CONNECTOR	1
	8113088047	LH HORIZONTAL COVER CONNECTOR	1

NAME_ASSB	CODE_PART NO	NAME	QTY
RH SIDE BODY	100008011	PILLAR COVER	1
	100008021	PILLAR COVER	1
	100008031	PILLAR COVER	3

NAME_ASSB	CODE_PART NO	NAME	QTY
RH SIDE BODY			

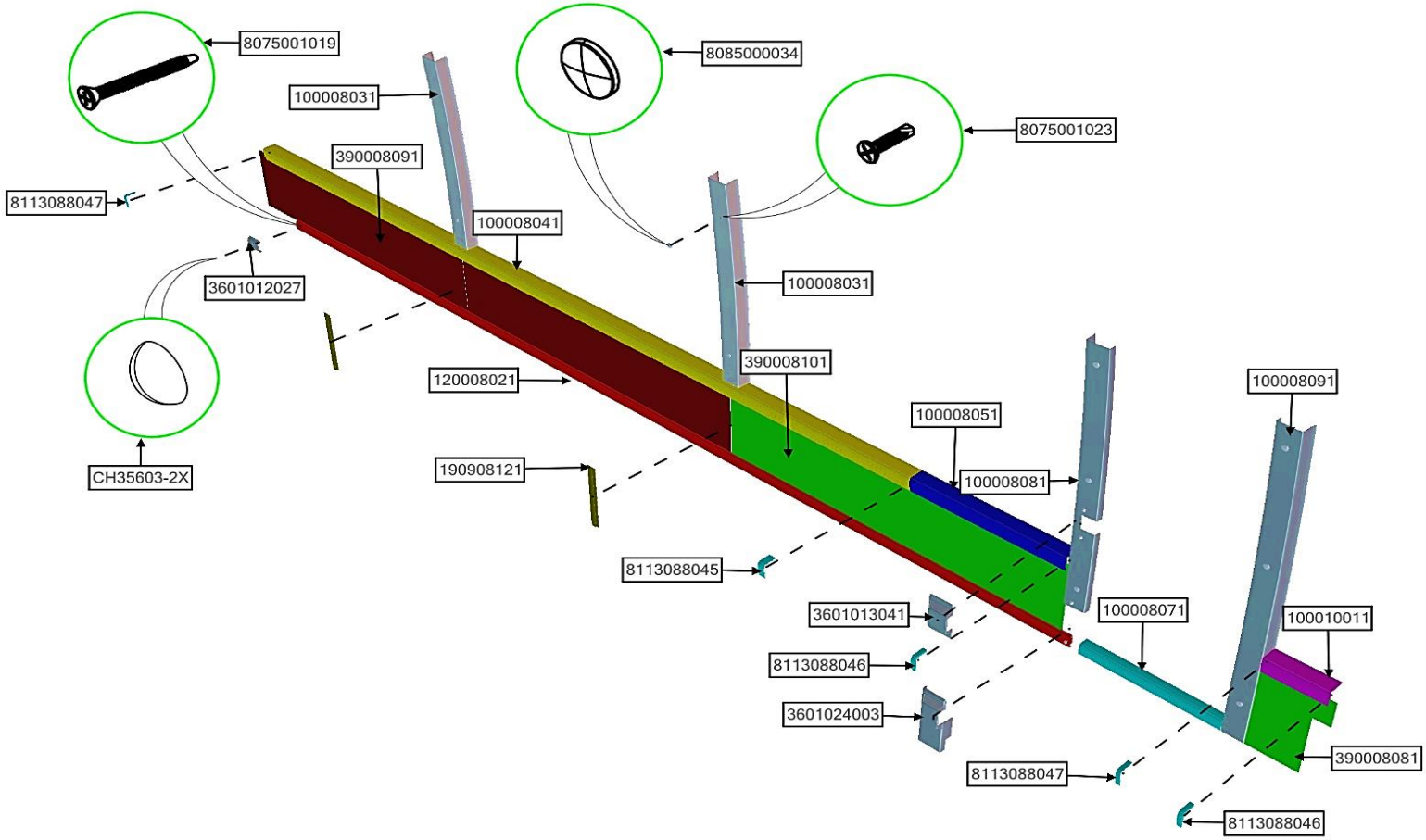

NAME_ASSB	CODE_PART NO	NAME	QTY
RH SIDE BODY	3601012027	SEAT RAIL COVER	1
	CH35603-2X	SCREW COVER	1
	8085000034	SCREW COVER	1
	190908121	MOULDING	2
	120008021	SIDE SEAT RAIL 01	1
	390008081	RH INTERIOR PANEL 02	1
	390008091	RH INTERIOR PANEL 02	1

NAME_ASSB	CODE_PART NO	NAME	QTY
RH SIDE BODY	390008101	RH INTERIOR PANEL 03	1
	8075001023	CREW 0420	1
	8075001019	CREW 0525	1
	8113088045	MIDDLE COVER CONNECTOR	1
	8113088046	RH HORIZONTAL COVER CONNECTOR	2
	8113088047	LH HORIZONTAL COVER CONNECTOR	2
	3601013041	COVER	1

NAME_ASSB	CODE_PART NO	NAME	QTY
RH SIDE BODY	3601024003	COVER	1
	100008041	PILLAR COVER	1
	100008051	PILLAR COVER	1
	100010011	PILLAR COVER	1
	100008071	PILLAR COVER	1
	100008031	PILLAR COVER	2
	100008081	PILLAR COVER	1

NAME_ASSB	CODE_PART NO	NAME	QTY
RH SIDE BODY	100008091	PILLAR COVER	1

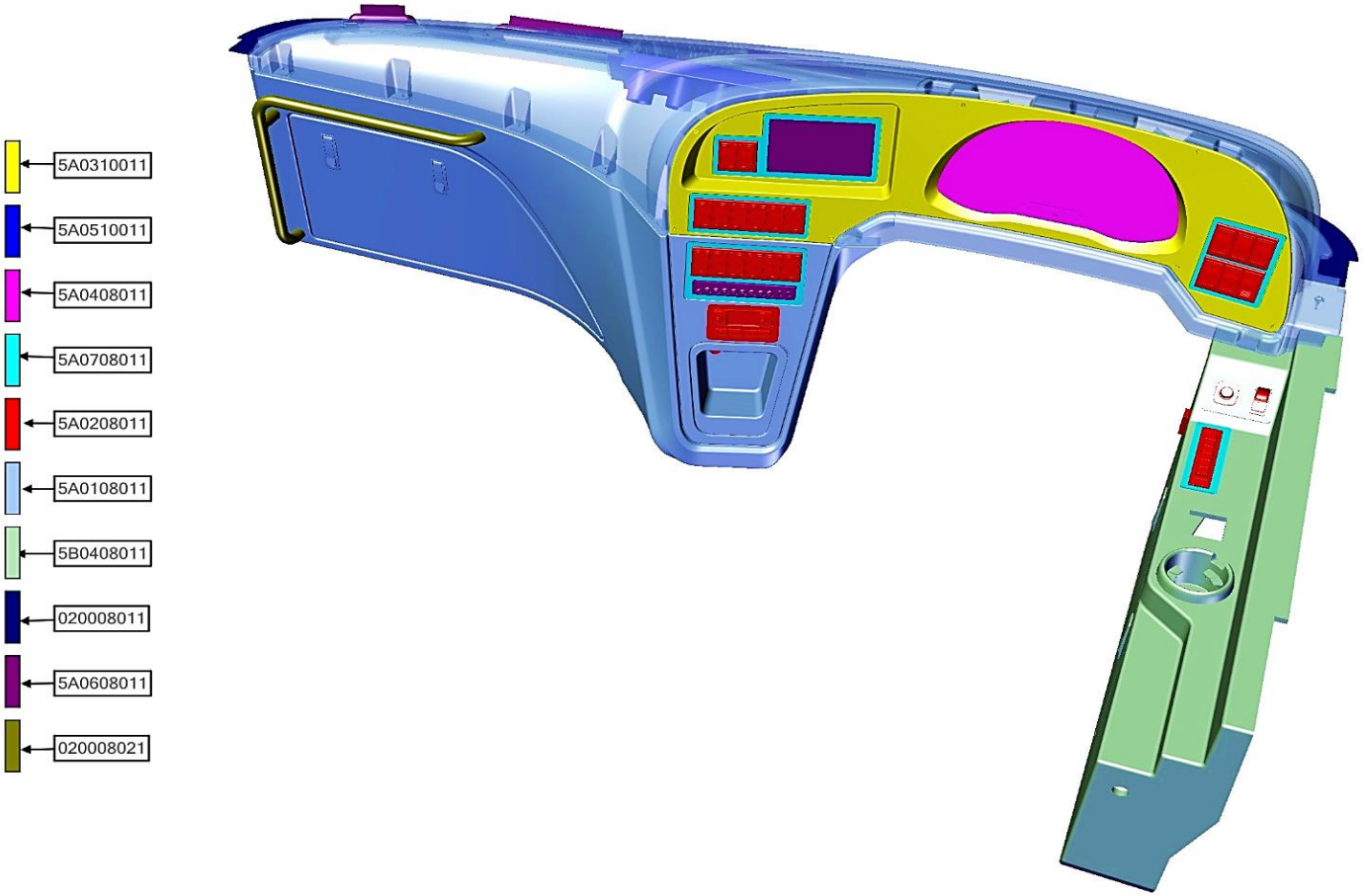

NAME_ASSB	CODE_PART NO	NAME	QTY
DASHBOARD - ASSY	020008011	COVER	1
	5A0608011	MINOR ITEMS	1
	5B0408011	SUB-DASHBOARD	1
	5A0108011	DASHBOARD - ASSY	1
	5A0208011	SWITCHES - ASSY	1
	5A0708011	SWITCH SUPPORT - ASSY	1
	5A0408011	DASHBOARD LOCK - ASSY	1

NAME_ASSB	CODE_PART NO	NAME	QTY
DASHBOARD - ASSY	5A0510011	MECHANICAL COMPONENT SET	1
	020008021	DASHBOARD HANDRAIL	1
	5A0310011	CLOCK DASHBOARD BORDER	1

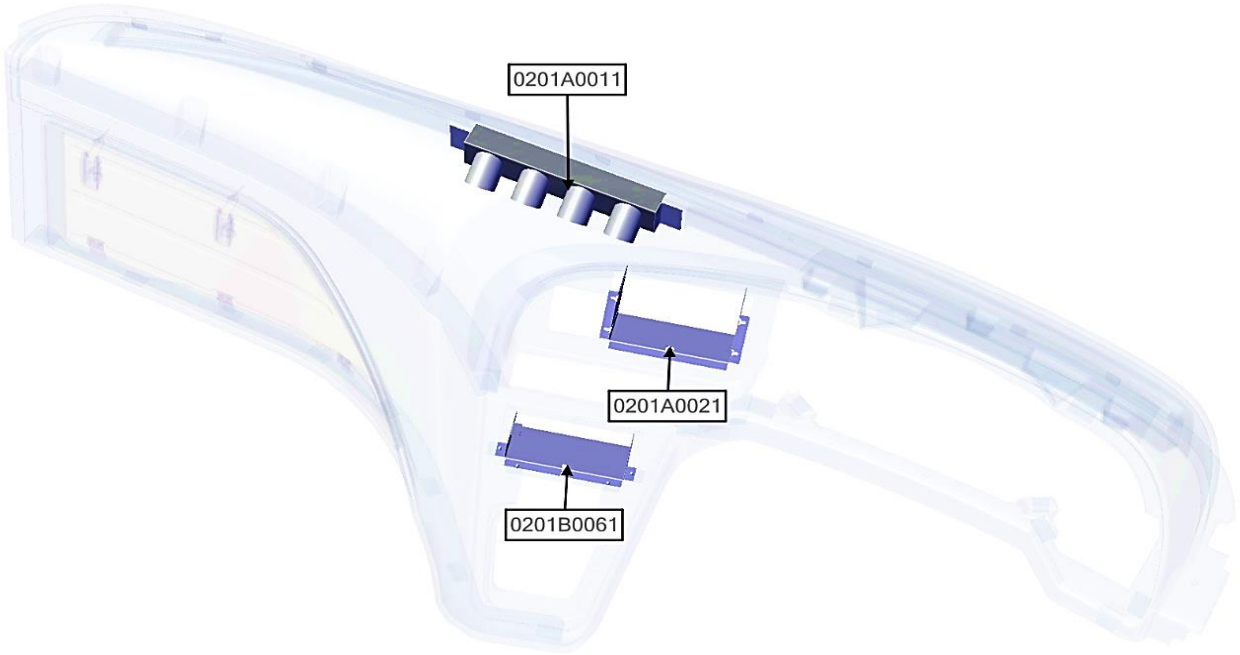

NAME_ASSB	CODE_PART NO	NAME	QTY
MECHANICAL COMPONENT SET	0201A0021	BRACKET	1
	0201A0011	HEATING DOOR	1
	0201B0061	BRACKET	1

NAME_ASSB	CODE_PART NO	NAME	QTY
MECHANICAL COMPONENT SET			

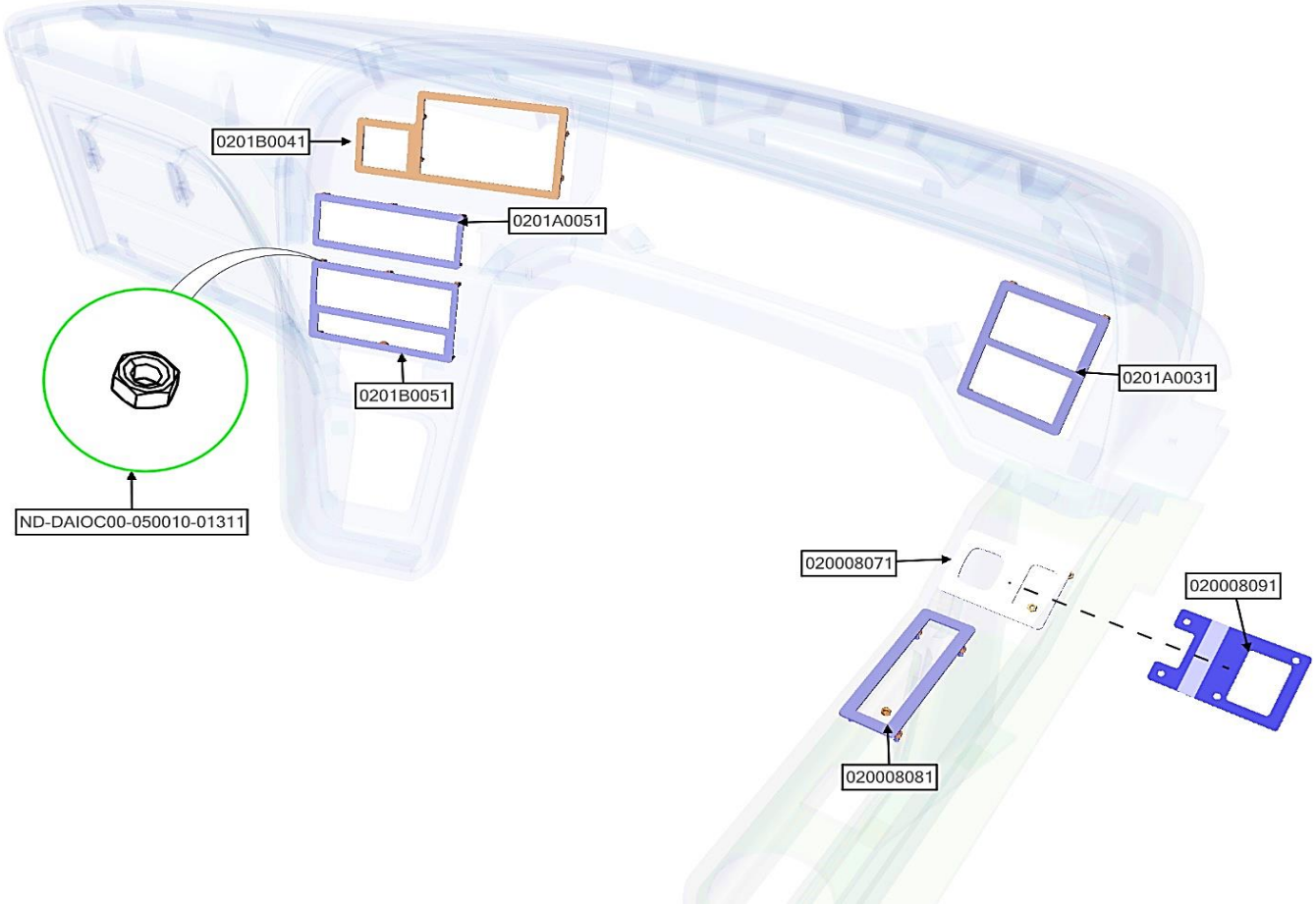

NAME_ASSB	CODE_PART NO	NAME	QTY
SWITCH SUPPORT - ASSY	ND-DAIOC00-050010-01311	NUT 05100	32
	0201B0041	SWITCH SUPPORT 02	1
	0201A0031	SWITCH SUPPORT 01	1
	0201A0051	SWITCH SUPPORT 03	1
	020008071	SWITCH SUPPORT 06	1
	020008091	SWITCH SUPPORT 07	1
	020008081	SWITCH SUPPORT	1

NAME_ASSB	CODE_PART NO	NAME	QTY
SWITCH SUPPORT - ASSY	0201B0051	SWITCH SUPPORT 05	1

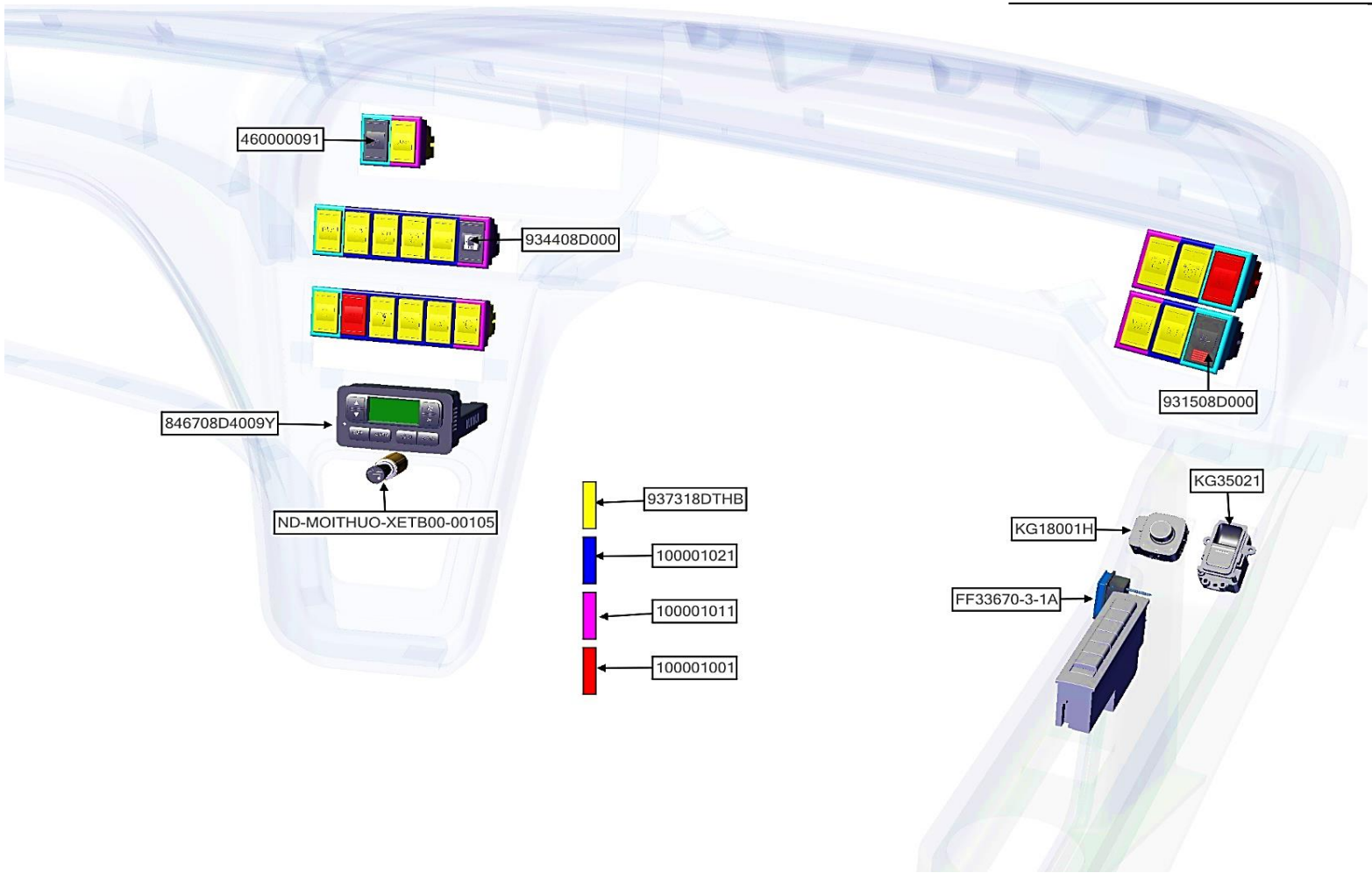

NAME_ASSB	CODE_PART NO	NAME	QTY
SWITCHES - ASSY	937318DTHB	SWITCH	15
	100001021	MOUNTING	10
	100001011	MOUNTING	5
	100001001	MOUNTING	5
	937758DTHB	SWITCH	2
	460000091	FAN SWITCH	1
	KG18001H	REAR VIEW MIRROR SWITCH	1

NAME_ASSB	CODE_PART NO	NAME	QTY
SWITCHES - ASSY	KG35021	GLASS LIFTING SWITCH	1
	FF33670-3-1A	FIRE FIGHTING SWITCH	1
	ND-MOITHUO-XETB00-00105	CIGARETTE LIGHTER	1
	846708D4009Y	A/C SWITCH BOX	1
	931508D000	POWER SWITCH	1
	934408D000	DOOR CONTROLLING SWITCH	1

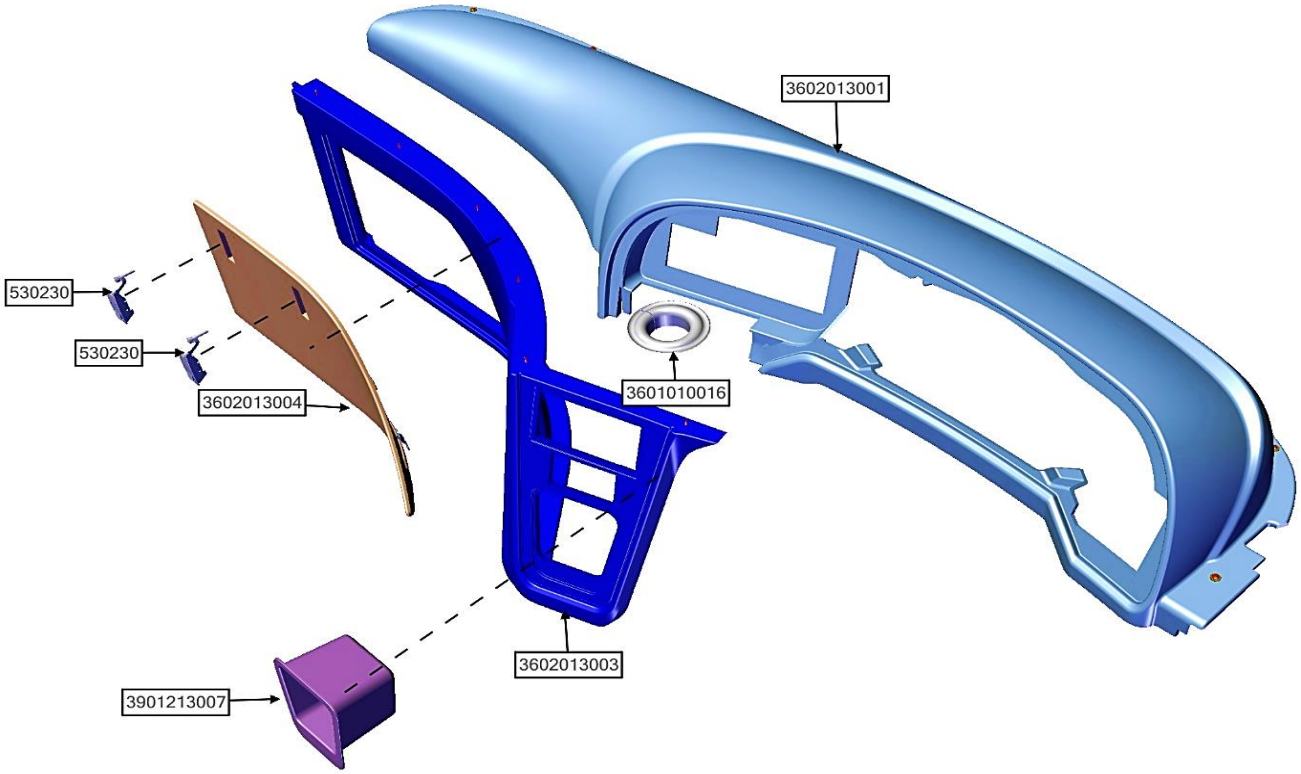

NAME_ASSB	CODE_PART NO	NAME	QTY
DASHBOARD - ASSY	530230	DASHBOARD LATCH	2
	3901213007	FILE BOX	1
	3602013004	COVER - ASSY - JUNCTION BOX	1
	3601010016	WIRING COVER	1
	3602013003	DASHBOARD PARTITION	1
	3602013001	PANEL - ASSY - CRACK PAD MAIN	1

NAME_ASSB	CODE_PART NO	NAME	QTY
DASHBOARD - ASSY			

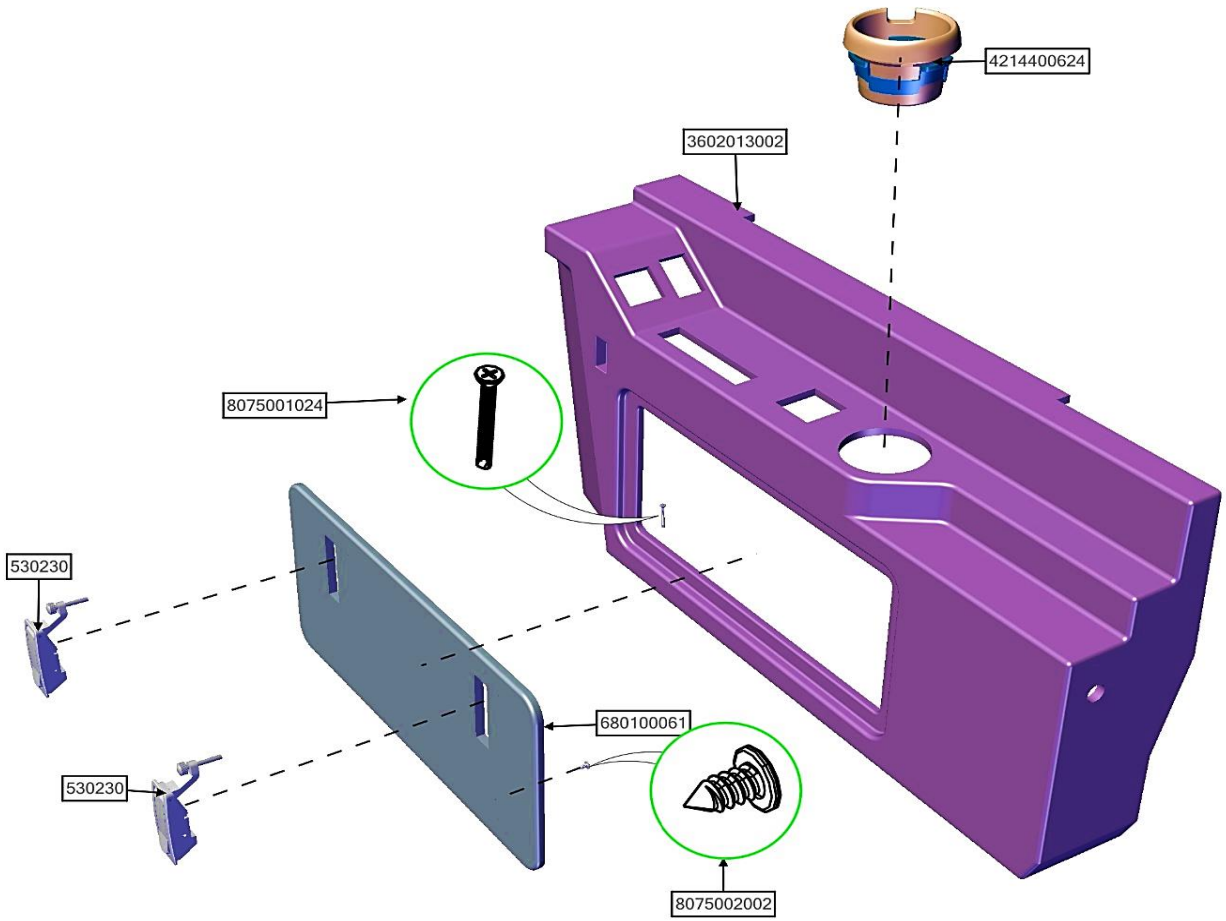

NAME_ASSB	CODE_PART NO	NAME	QTY
SUB-DASHBOARD	530230	DASHBOARD LATCH	2
	8075001024	CREW 0440	1
	8075002002	CREW 0510	1
	680100061	SUB DASHBOARD COVER	1
	4214400624	MOUNTING	1
	3602013002	SUB DASHBOARD	1

NAME_ASSB	CODE_PART NO	NAME	QTY
SUB-DASHBOARD			

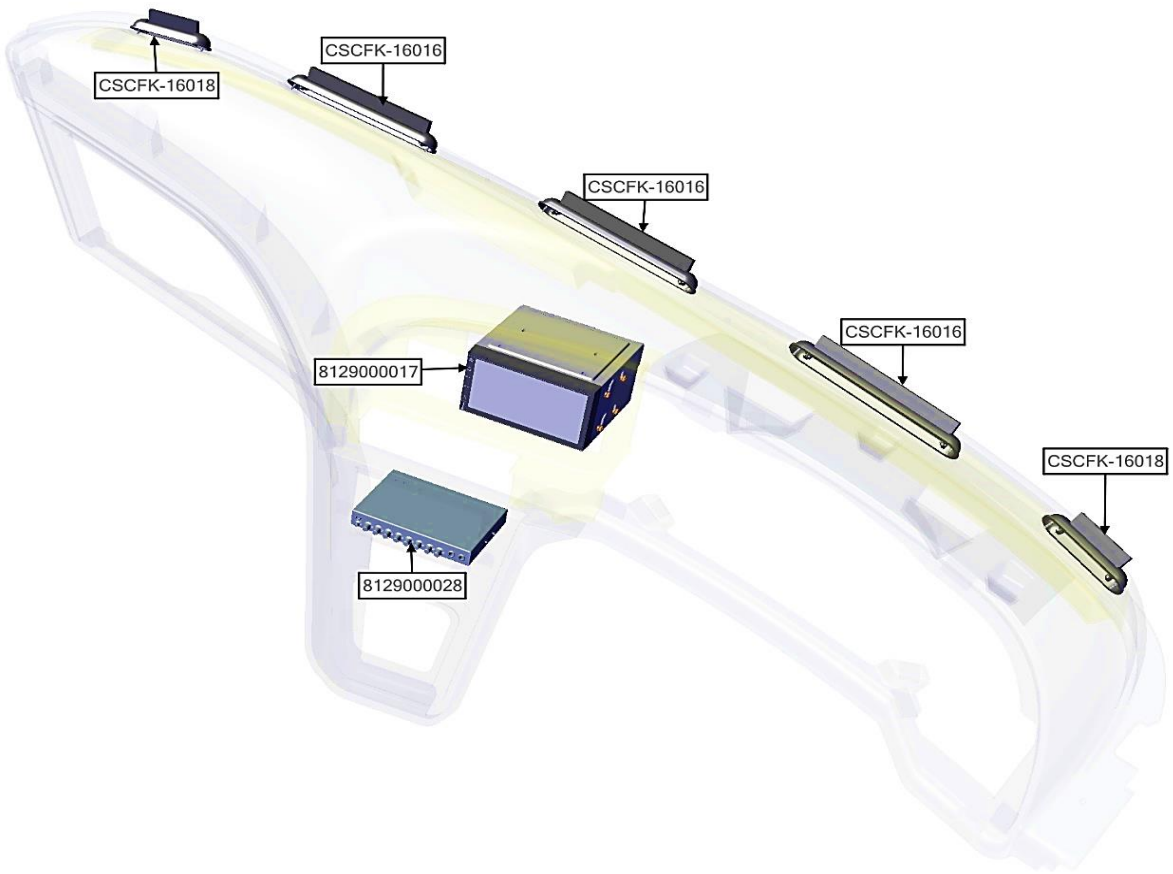

NAME_ASSB	CODE_PART NO	NAME	QTY
MINOR ITEMS	CSCFK-16016	GLASS DRYING WIND DOOR	3
	CSCFK-16018	GLASS DRYING WIND DOOR	2
	8129000028	MIXER	1
	8129000017	ANDROID DVD	1

NAME_ASSB	CODE_PART NO	NAME	QTY
MINOR ITEMS			

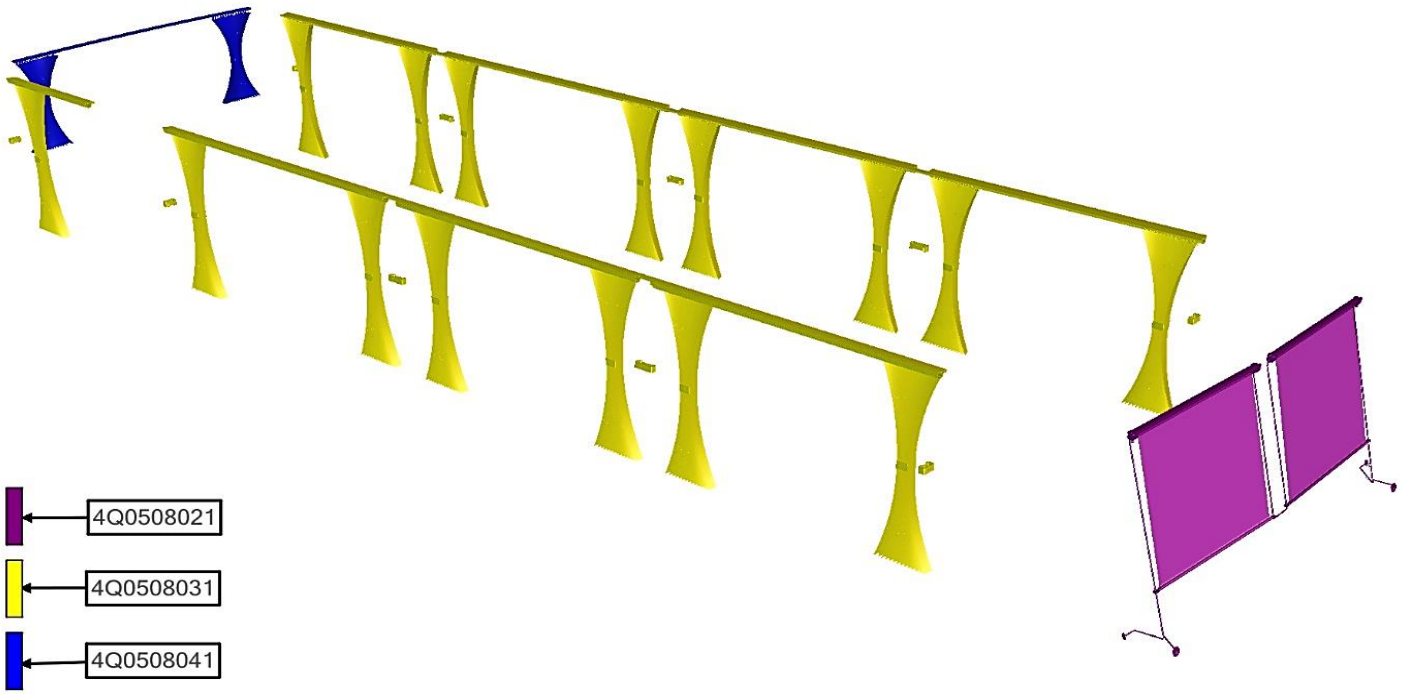

NAME_ASSB	CODE_PART NO	NAME	QTY
CURTAIN - ASSY	4Q0508041	REAR CURTAIN - ASSY	1
	4Q0508031	SIDE CURTAIN - ASSY	1
	4Q0508021	SUNVISOR - ASSY	1

NAME_ASSB	CODE_PART NO	NAME	QTY
CURTAIN - ASSY			

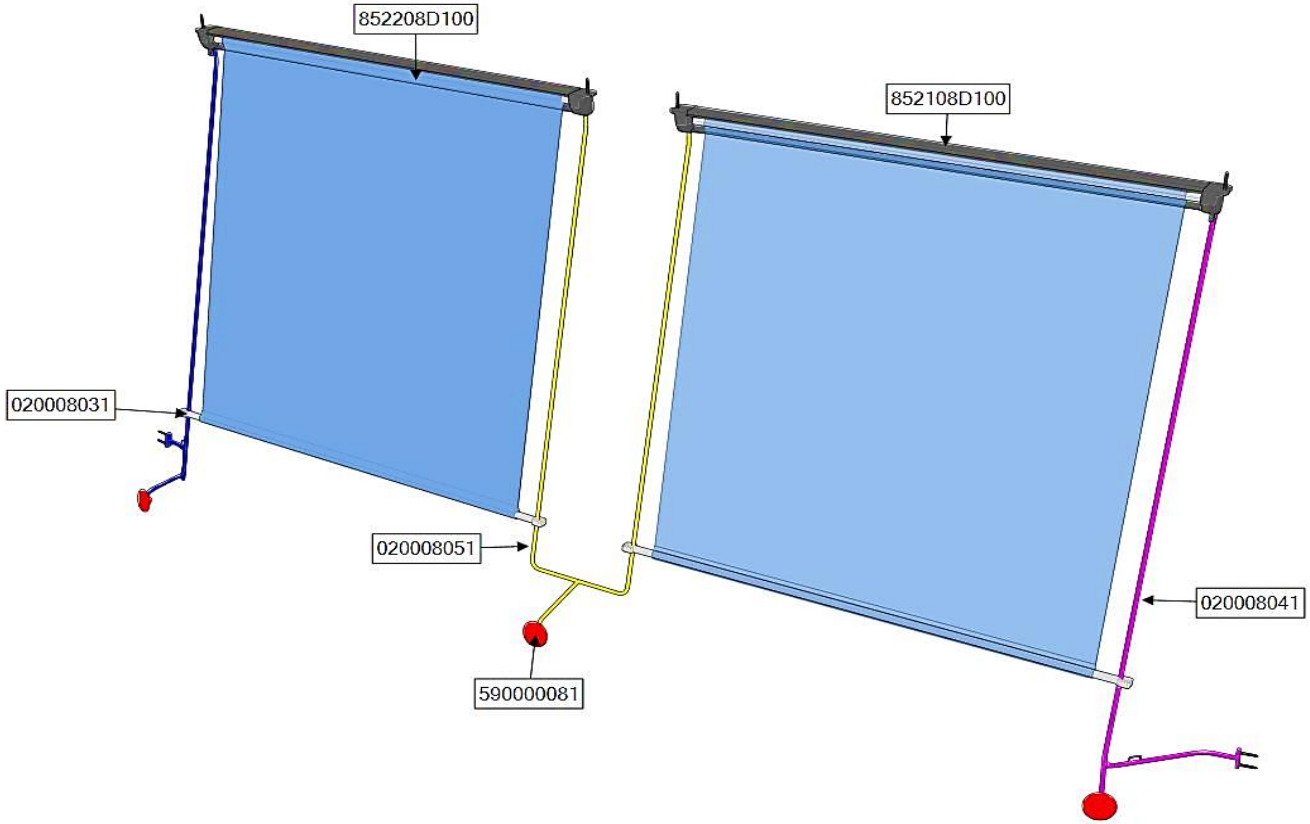

NAME_ASSB	CODE_PART NO	NAME	QTY
SUNVISOR - ASSY	852208D100	RH SUNVISOR	1
	852108D100	LH SUNVISOR	1
	590000081	VACUUM RUBBER	3
	020008051	GUIDE BAR	1
	020008031	GUIDE BAR	1
	020008041	GUIDE BAR	1

NAME_ASSB	CODE_PART NO	NAME	QTY
SUNVISOR - ASSY			

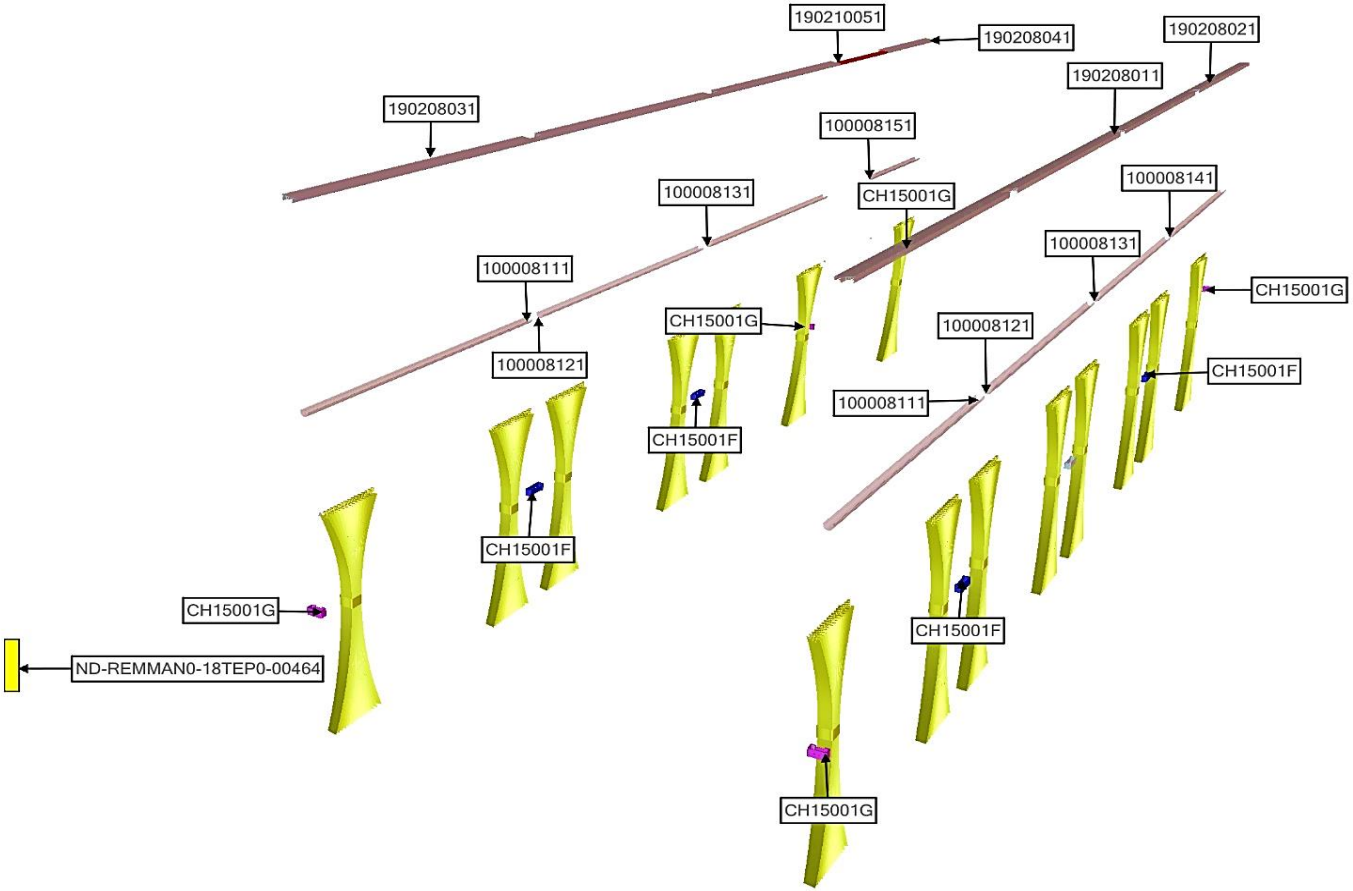

NAME_ASSB	CODE_PART NO	NAME	QTY
SIDE CURTAIN - ASSY	ND-REMMAN0-18TEP0-00464	CURTAIN - ASSY	15
	CH15001F	CURTAIN HOOK	4
	CH15001G	CURTAIN HOOK	5
	190208031	RH CURTAIN RAIL 01	1
	190208041	RH CURTAIN RAIL 02	1
	190210051	RH CURTAIN RAIL 03	1
	190208021	RH CURTAIN RAIL 02	1

NAME_ASSB	CODE_PART NO	NAME	QTY
SIDE CURTAIN - ASSY	190208011	LH CURTAIN RAIL 01	1
	100008111	CURTAIN LIGHT COVER 01	2
	100008131	CURTAIN LIGHT COVER 03	2
	100008121	CURTAIN LIGHT COVER 03	2
	100008141	CURTAIN LIGHT COVER 04	1
	100008151	CURTAIN LIGHT COVER 05	1

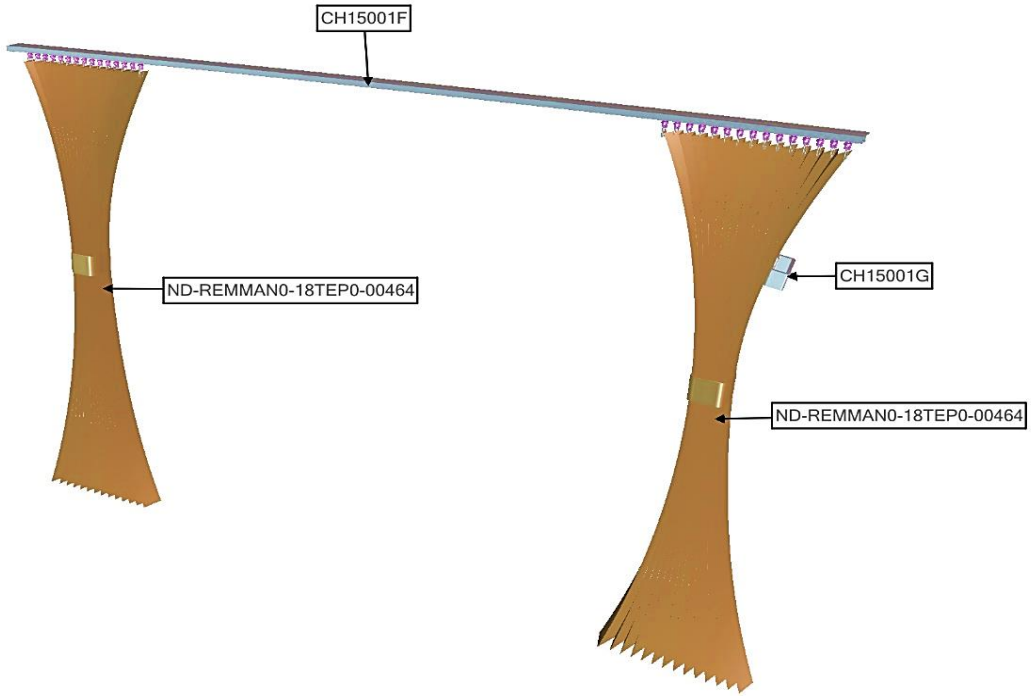

NAME_ASSB	CODE_PART NO	NAME	QTY
REAR CURTAIN - ASSY	ND-REMMAN0-18TEP0-00464	CURTAIN - ASSY	2
	CH15001G	CURTAIN HOOK	2
	CH15001F	REAR CURTAIN RAIL	1

NAME_ASSB	CODE_PART NO	NAME	QTY
REAR CURTAIN - ASSY			

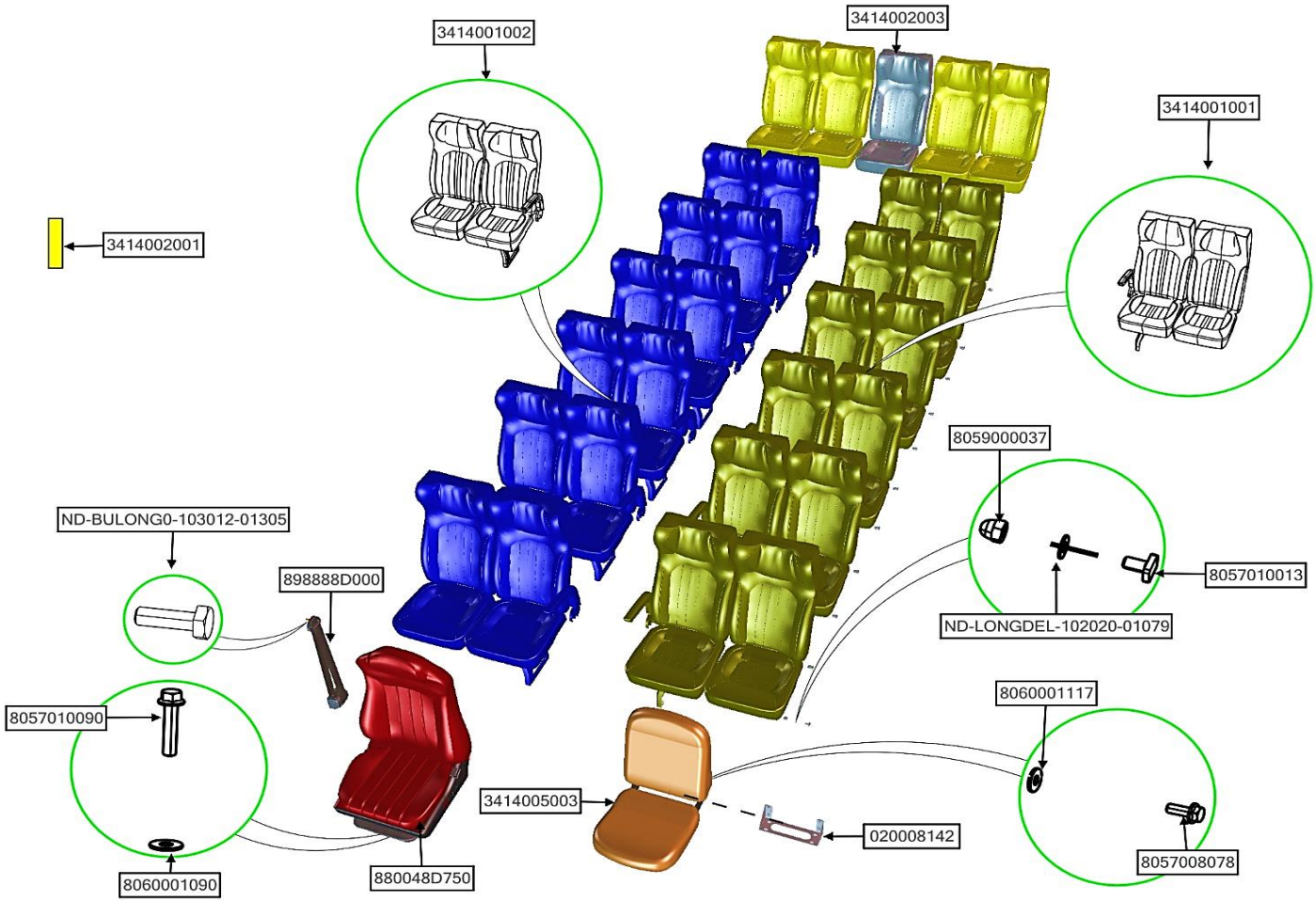

NAME_ASSB	CODE_PART NO	NAME	QTY
SEATS	3414001001	LH DOUBLE SEATS	6
	3414001002	RH DOUBLE SEATS	6
	3414002001	REAR DOUBLE SEATS	2
	020008142	BRACKET	1
	3414002003	REAR SIGLE SEATS	1
	880048D750	DRIVER SEAT	1
	3414005003	GUIDE SEATS	1
	8057010090	BOLT 10045125	1

NAME_ASSB	CODE_PART NO	NAME	QTY
SEATS	8057008078	BOLT 08020125	1
	8060001117	WASHER Ø08	1
	898888D000	SEAT BELT	1
	8059000037	NUT 10125	1
	ND-LONGDEL-102020-01079	WASHER Ø10	1
	8057010013	BOLT 10018125	1
	8060001090	WASHER Ø10	1
	ND-BULONG0-103012-01305	BOLT 10030125	1

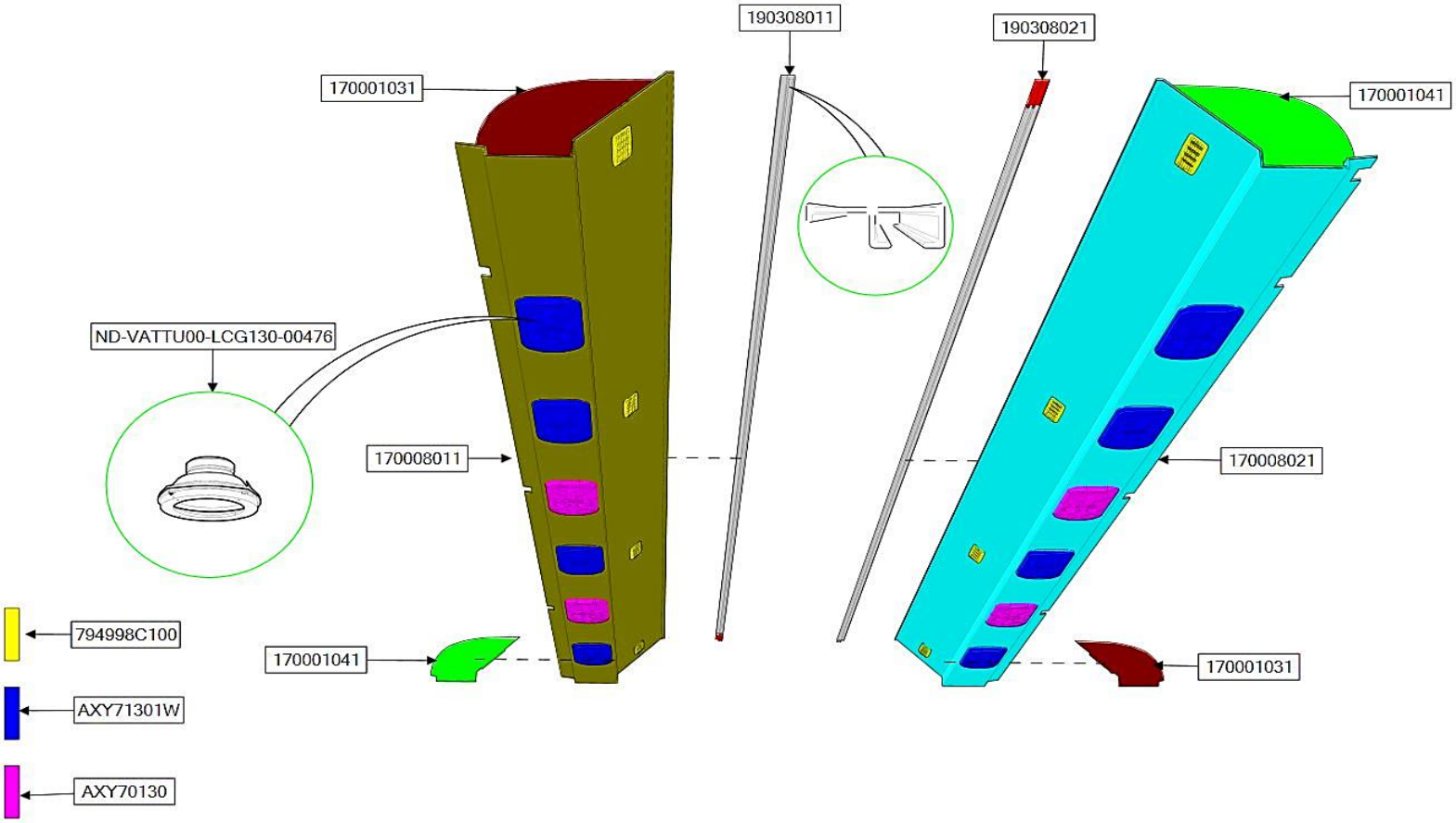

NAME_ASSB	CODE_PART NO	NAME	QTY
WIND DUCT - ASSY	794998C100	AIR-CONDITIONING DOOR	8
	AXY71301W	READING LIGHTS WITH SPEAKER	8
	AXY70130	READING LIGHTS WITHOUT SPEAKERS	4
	190308011	MOULDING	2
	170001041	COVER	2
	170001031	COVER	2
	190308021	MOULDING	2

NAME_ASSB	CODE_PART NO	NAME	QTY
WIND DUCT - ASSY	ND-VATTU00-LCG130-00476	SPEAKER	1
	170008011	LH WIND DUCT	1
	170008021	RH WIND DUCT	1

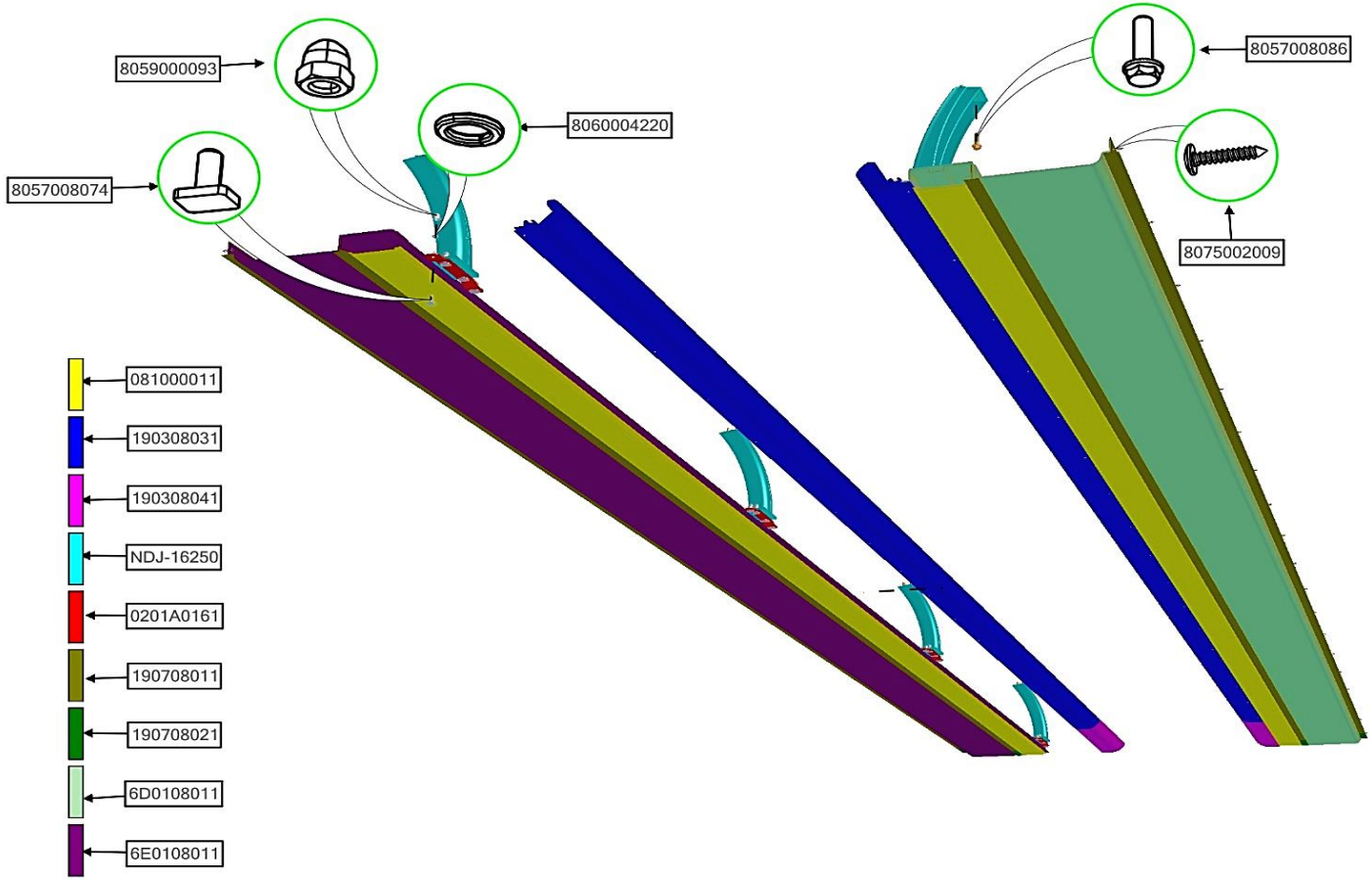

NAME_ASSB	CODE_PART NO	NAME	QTY
LUGGAGE SHELVES - ASSY	081000011	MICA COVER 01	12
	NDJ-16250	LUGGAGE SHELVES BRACKET	8
	0201A0161	BRACKET	8
	190708021	MOULDING	4
	190708011	MOULDING	4
	190308041	LUGGAGE RACK RAIL 02	2
	190308031	LUGGAGE RACK RAIL 01	2

NAME_ASSB	CODE_PART NO	NAME	QTY
LUGGAGE SHELVES - ASSY	6D0108011	LH LUGGAGE SHELVES - ASSY	1
	8075002009	CREW 0420	1
	8057008086	BOLT 08025125	1
	8057008074	BOLT 08015125	1
	8060004220	SPLIT WASHER Ø08	1
	8059000093	NUT 08125	1
	6E0108011	RH LUGGAGE SHELVES - ASSY	1

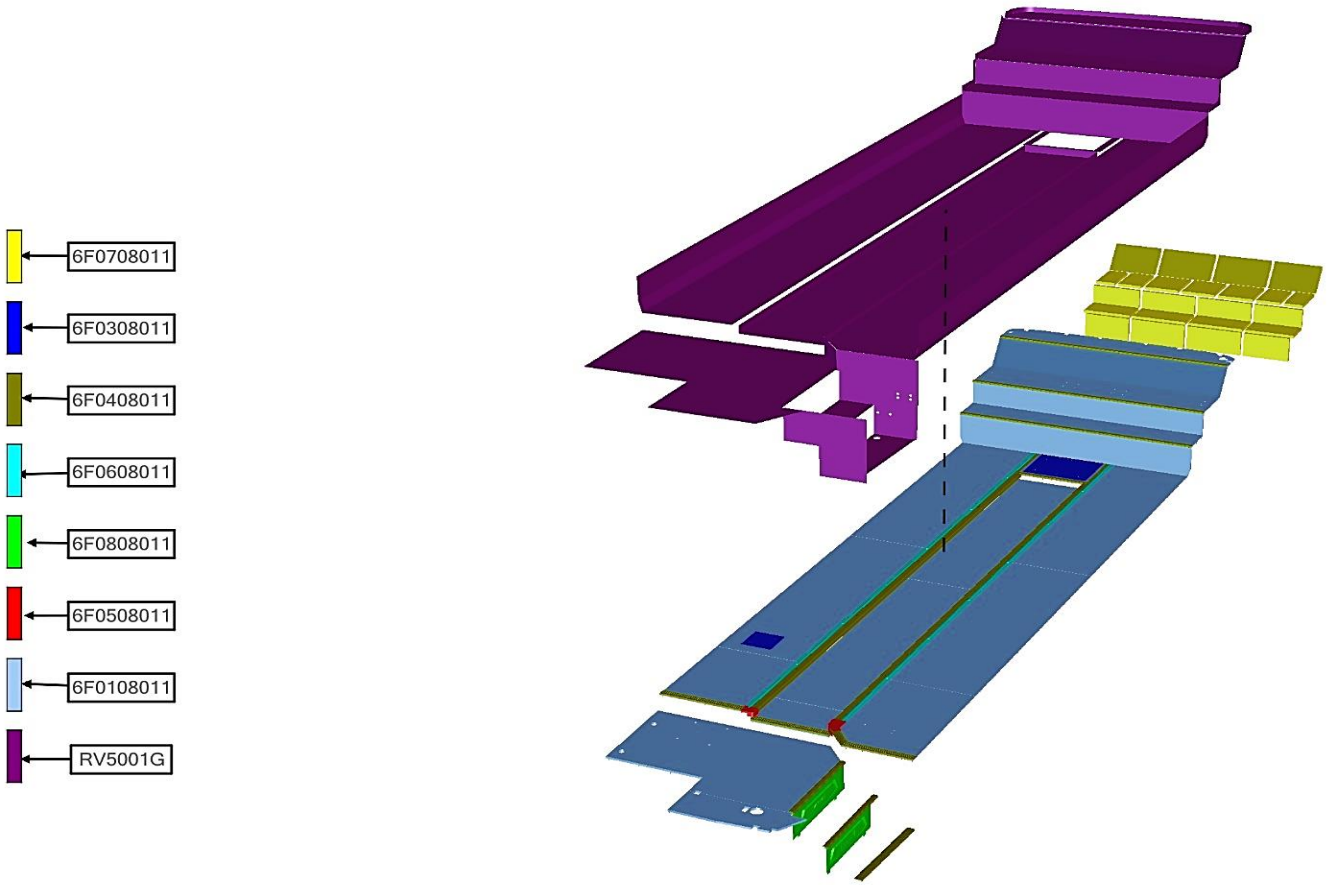

NAME_ASSB	CODE_PART NO	NAME	QTY
FLOOR - ASSY	6F0508011	COVER	1
	RV5001G	FLOOR VENEER	1
	6F0808011	STAIRS COVER	1
	6F0108011	FLOORING BOARD - ASSY	1
	6F0608011	SEAT RAIL - ASSY	1
	6F0408011	MOULDING - ASSY	1
	6F0308011	HATCHES - ASSY	1

NAME_ASSB	CODE_PART NO	NAME	QTY
FLOOR - ASSY	6F0708011	FLOOR INSULATION	1

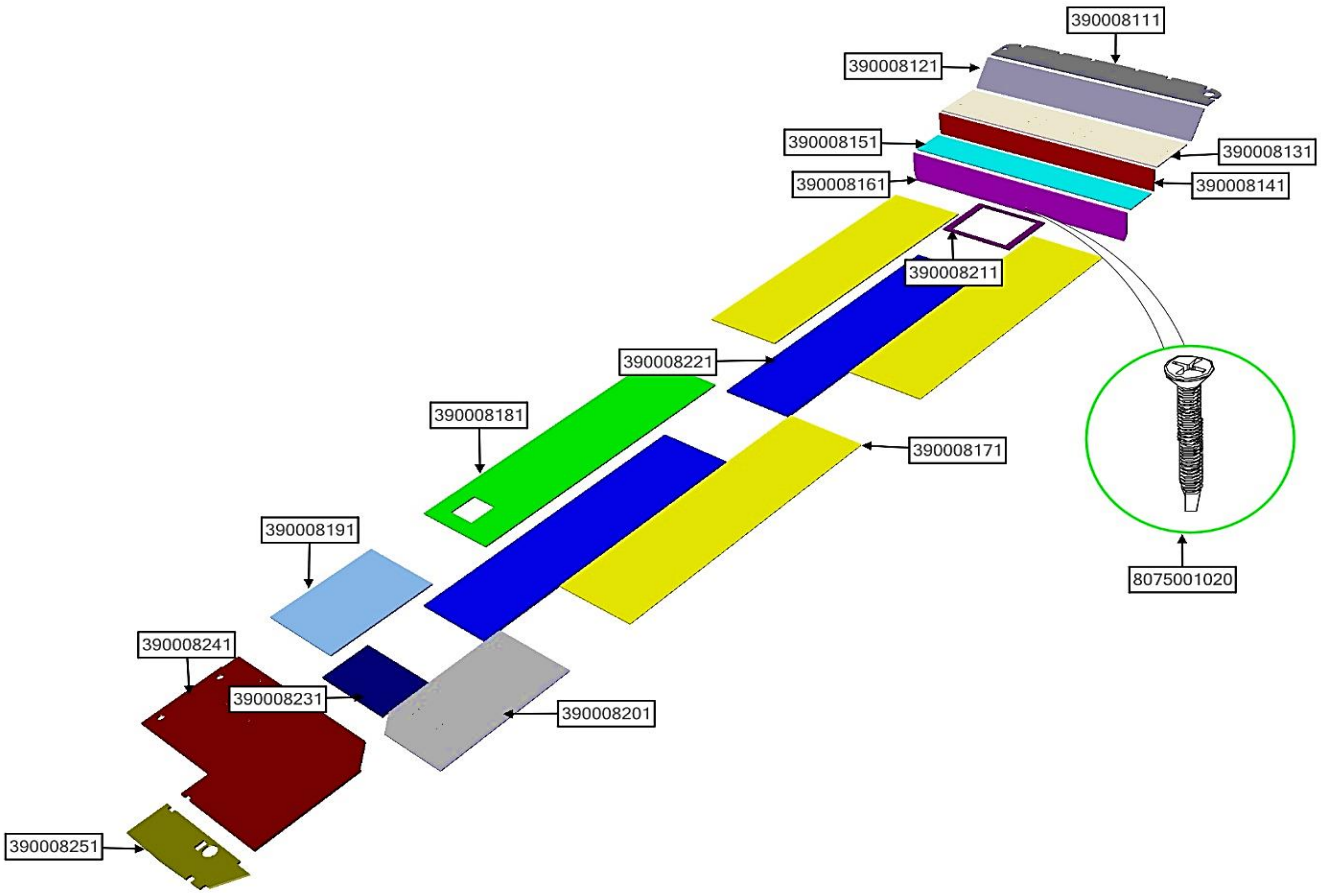

NAME_ASSB	CODE_PART NO	NAME	QTY
FLOORING BOARD - ASSY	390008161	FLOORING BOARD 06	1
	390008201	FLOORING BOARD 10	1
	390008211	FLOORING BOARD 11	1
	390008231	FLOORING BOARD 13	1
	390008251	FLOORING BOARD 15	1
	390008241	FLOORING BOARD 14	1
	8075001020	CREW 0540	1
	390008221	FLOORING BOARD 12	2

NAME_ASSB	CODE_PART NO	NAME	QTY
FLOORING BOARD - ASSY	390008151	FLOORING BOARD 05	1
	390008141	FLOORING BOARD 04	1
	390008131	FLOORING BOARD 03	1
	390008121	FLOORING BOARD 02	1
	390008111	FLOORING BOARD 01	1
	390008181	FLOORING BOARD 08	1
	390008191	FLOORING BOARD 09	1
	390008171	FLOORING BOARD 07	3

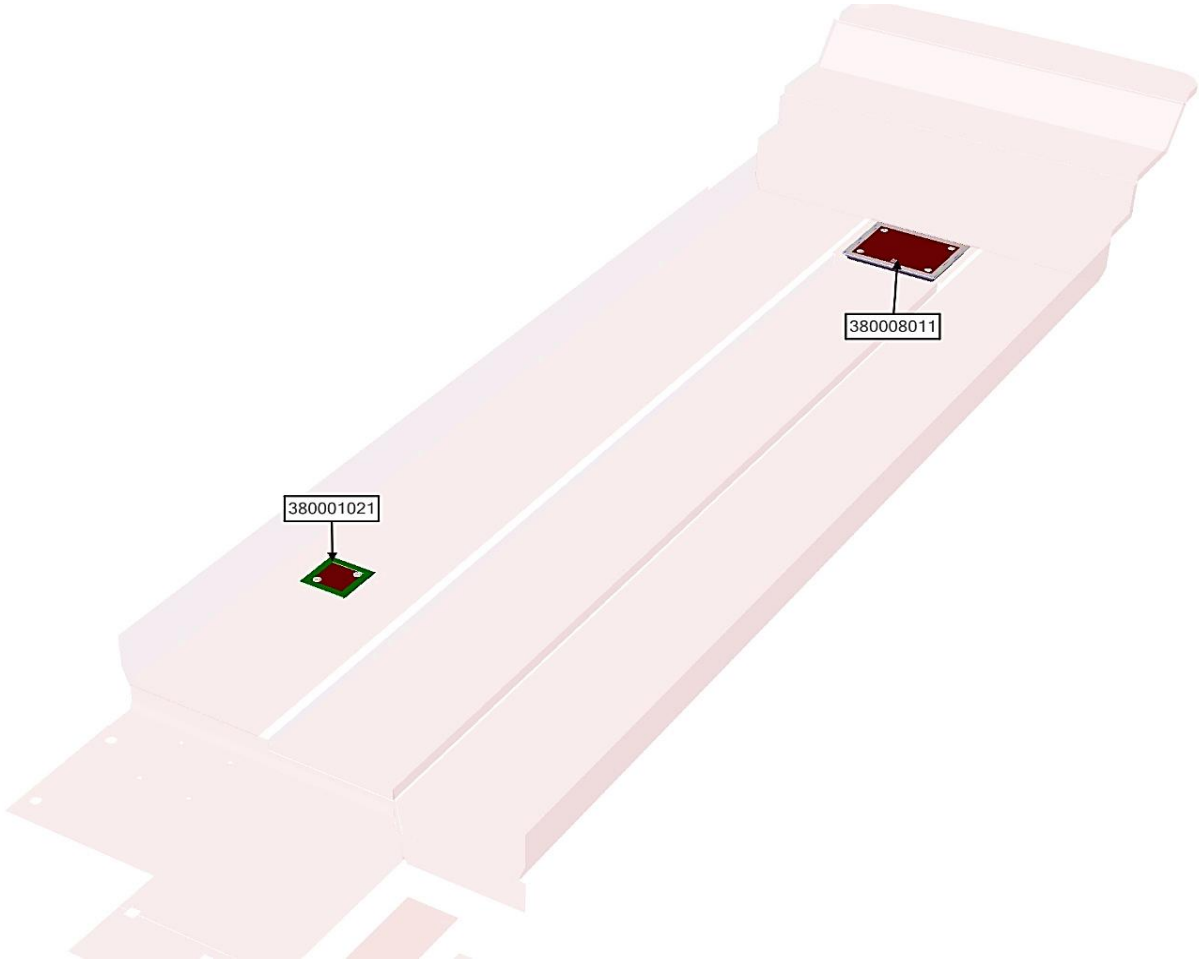

NAME_ASSB	CODE_PART NO	NAME	QTY
HATCHES - ASSY	380008011	TRANSMISSION CHECKING HATCHES	1
	380001021	TANK CHECKING HATCHES	1

NAME_ASSB	CODE_PART NO	NAME	QTY
HATCHES - ASSY			

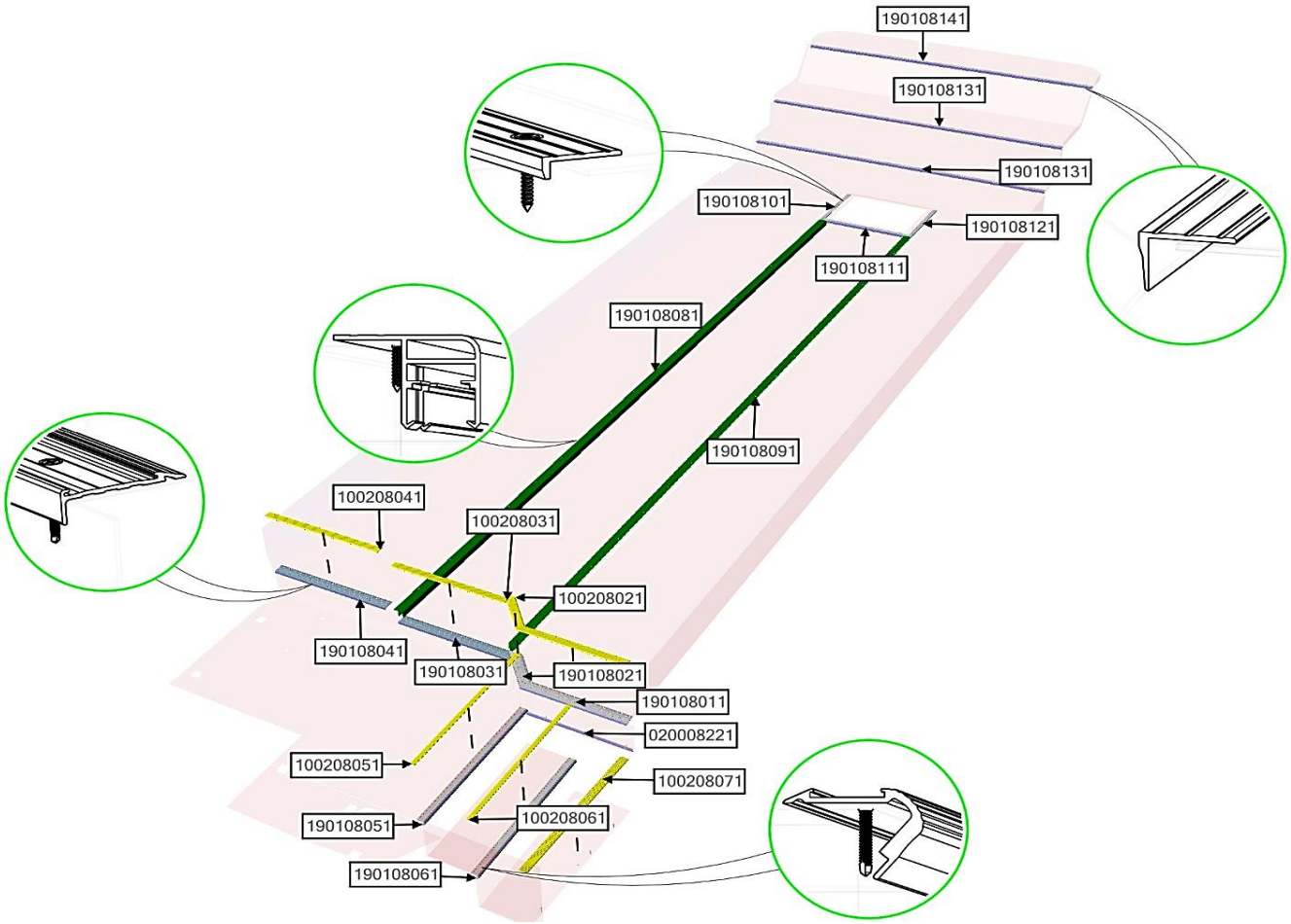

NAME_ASSB	CODE_PART NO	NAME	QTY
MOULDING - ASSY	100208051	PLASTIC COVER	1
	020008221	MOULDING	1
	190108011	MOULDING	1
	190108031	MOULDING	1
	190108041	MOULDING	1
	190108091	MOULDING	1
	190108081	MOULDING	1

NAME_ASSB	CODE_PART NO	NAME	QTY
MOULDING - ASSY	190108101	MOULDING	1
	190108111	MOULDING	1
	190108121	MOULDING	1
	100208061	PLASTIC COVER	1
	190108131	MOULDING	1
	100208071	PLASTIC COVER	1
	190108141	MOULDING	1

NAME_ASSB	CODE_PART NO	NAME	QTY
MOULDING - ASSY	100208071	PLASTIC COVER	1
	100208021	PLASTIC COVER	1
	100208031	PLASTIC COVER	1
	100208041	PLASTIC COVER	1
	190108051	MOULDING	1
	190108061	MOULDING	1
	190108021	MOULDING	1

NAME_ASSB	CODE_PART NO	NAME	QTY
MOULDING - ASSY			

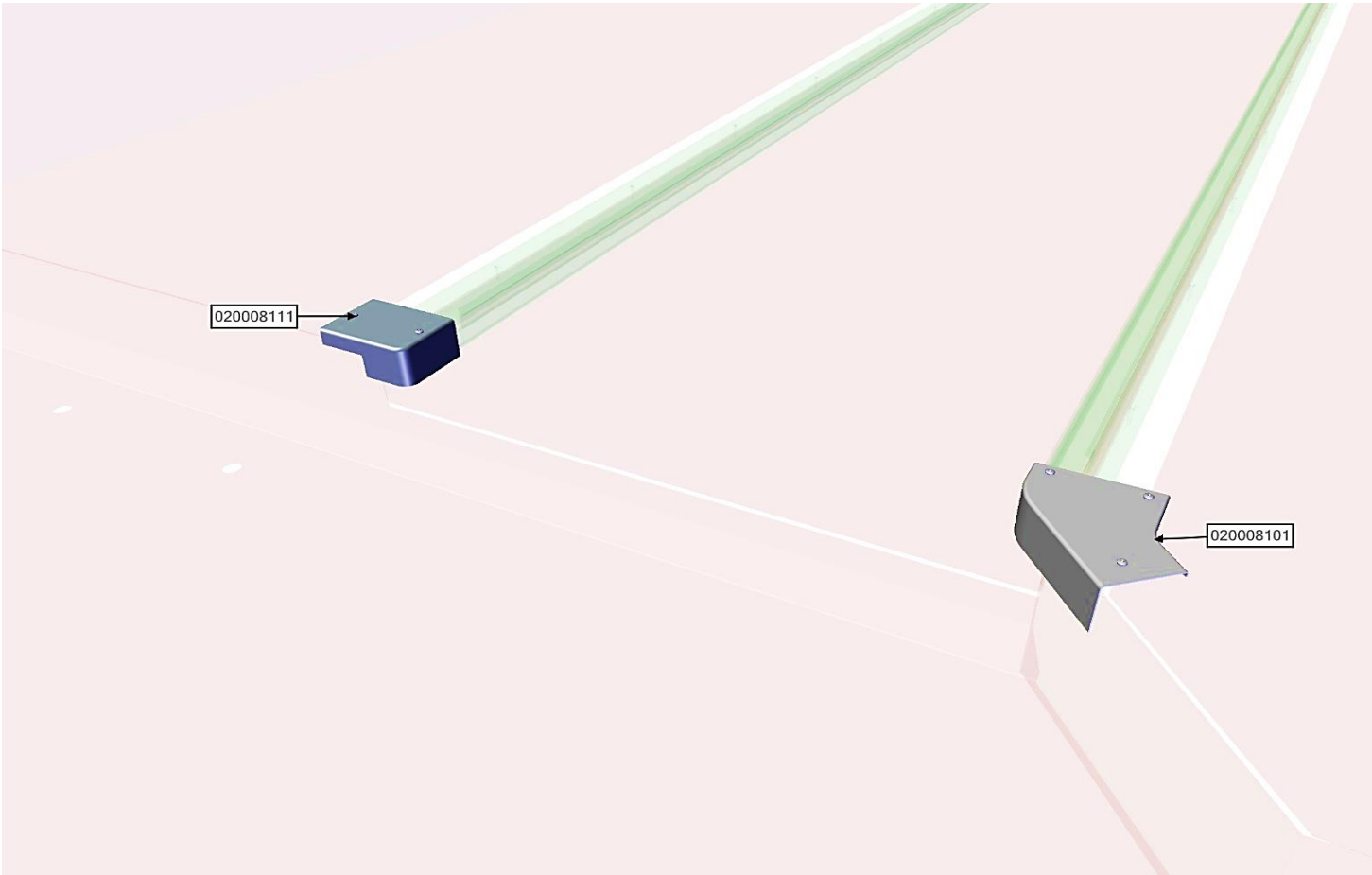

NAME_ASSB	CODE_PART NO	NAME	QTY
COVER MOULDING	20008111	MOULDING COVER 02	1
	20008101	MOULDING COVER 01	1

NAME_ASSB	CODE_PART NO	NAME	QTY
COVER MOULDING			

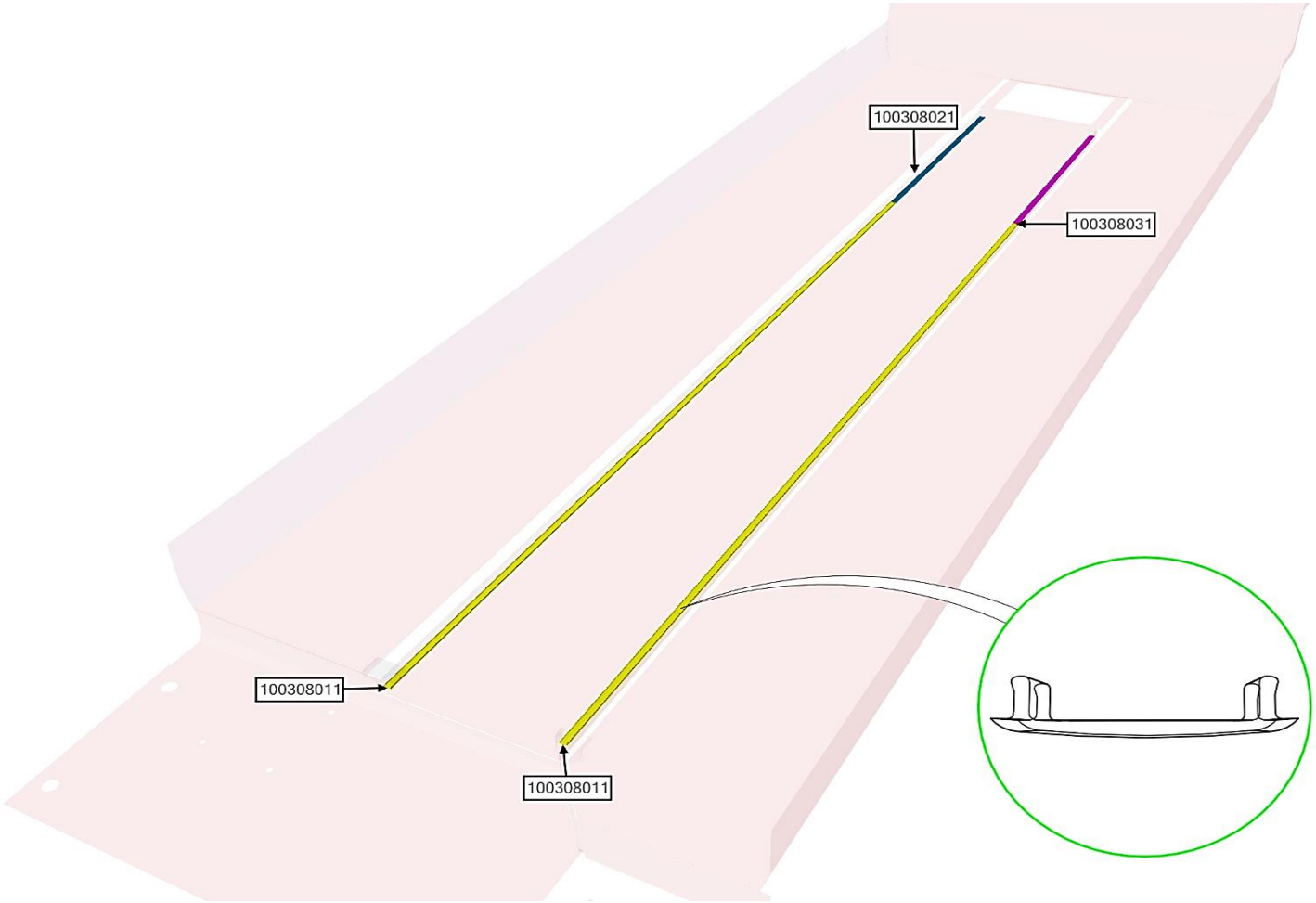

NAME_ASSB	CODE_PART NO	NAME	QTY
SEAT RAIL - ASSY	100308021	LAMP COVER 02	1
	100308031	LAMP COVER 03	1
	100308011	LAMP COVER 01	2

NAME_ASSB	CODE_PART NO	NAME	QTY
SEAT RAIL - ASSY			

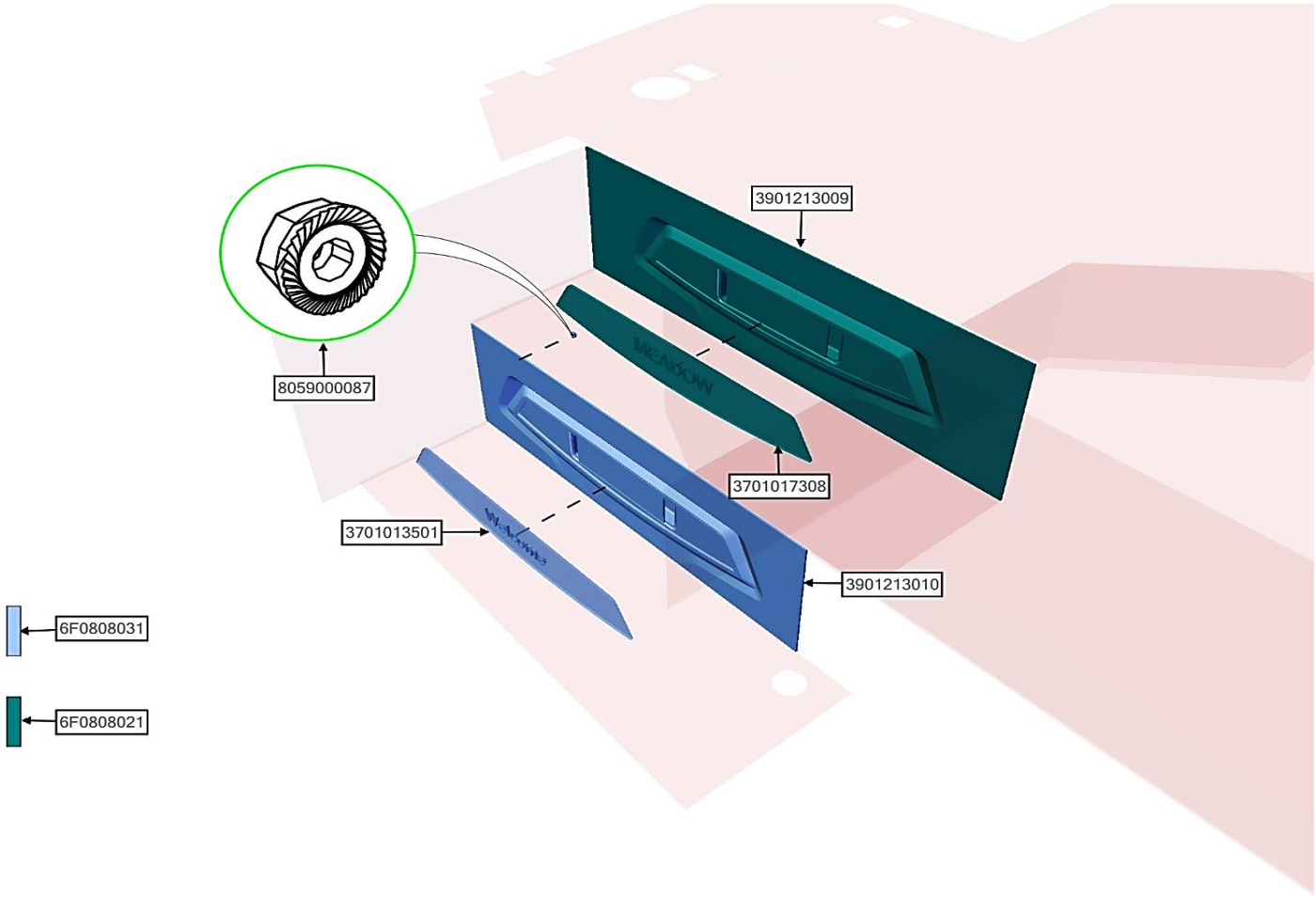

NAME_ASSB	CODE_PART NO	NAME	QTY
STAIRS COVER	6F0808021	STAIRS COVER 01	1
	6F0808031	STAIRS COVER 02	1
	3701013501	GLASS 02	1
	3901213009	STAIRS COVER 01	1
	3701017308	GLASS 01	1
	3901213010	STAIRS COVER 02	1
	8059000087	NUT 06100	1

NAME_ASSB	CODE_PART NO	NAME	QTY
STAIRS COVER			

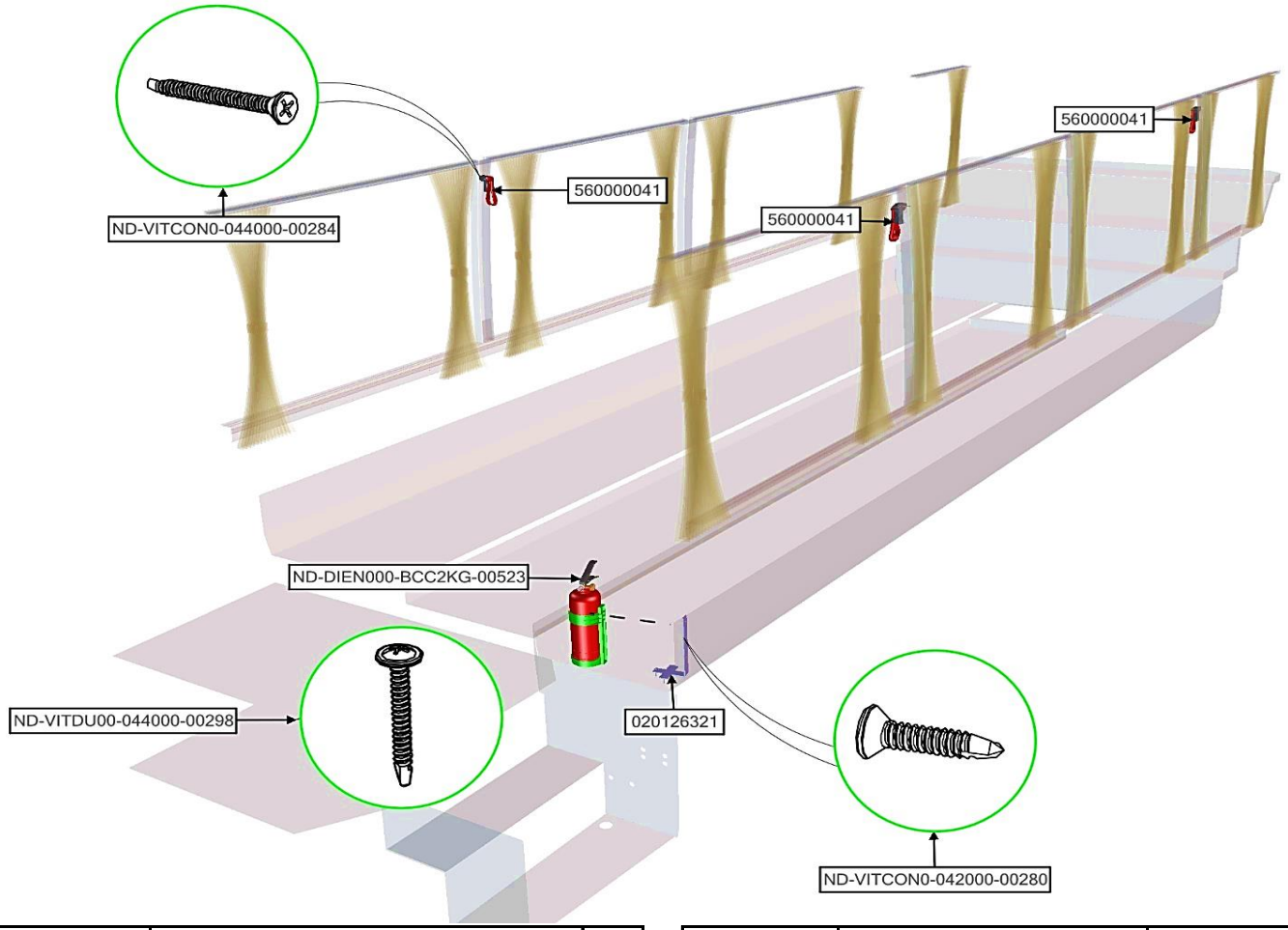

NAME_ASSB	CODE_PART NO	NAME	QTY
SAFETY SYSTEM	560000041	EXIT HAMMER	3
	ND-VITDU00-044000-00298	CREW 0435	1
	ND-DIEN000-BCC2KG-00523	FIRE EXTINGUISHER 2KG	1
	020126321	BRACKET	1
	ND-VITCON0-044000-00284	CREW 0440	1
	ND-VITCON0-042000-00280	CREW 0420	1

NAME_ASSB	CODE_PART NO	NAME	QTY
SAFETY SYSTEM			

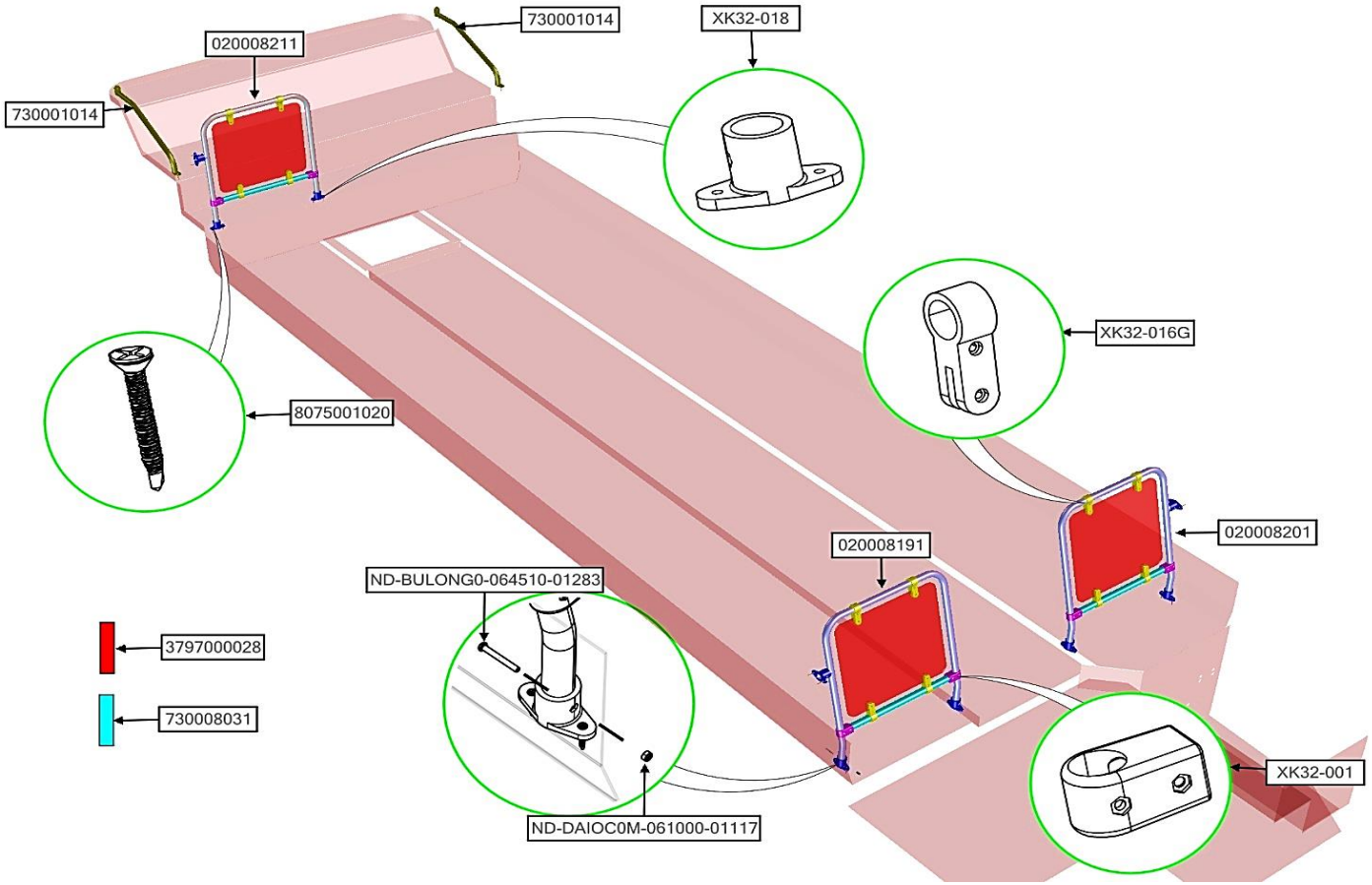

NAME_ASSB	CODE_PART NO	NAME	QTY
HANDRAIL - ASSY	XK32-016G	PARTITION CLAMPS	12
	XK32-018	MOUNTING	9
	XK32-001	BRACKET	6
	3797000028	PARTITION 01	3
	730008031	HANDER	3
	730001014	HANDER	2
	ND-BULONG0-064510-01283	BOTL 06045100	1

NAME_ASSB	CODE_PART NO	NAME	QTY
HANDRAIL - ASSY	8075001020	CREW 0540	1
	020008211	PARTITION FRAME 03	1
	020008201	PARTITION FRAME 02	1
	020008191	PARTITION FRAME 01	1
	ND-DAIOC0M-061000-01117	NUT 06100	1

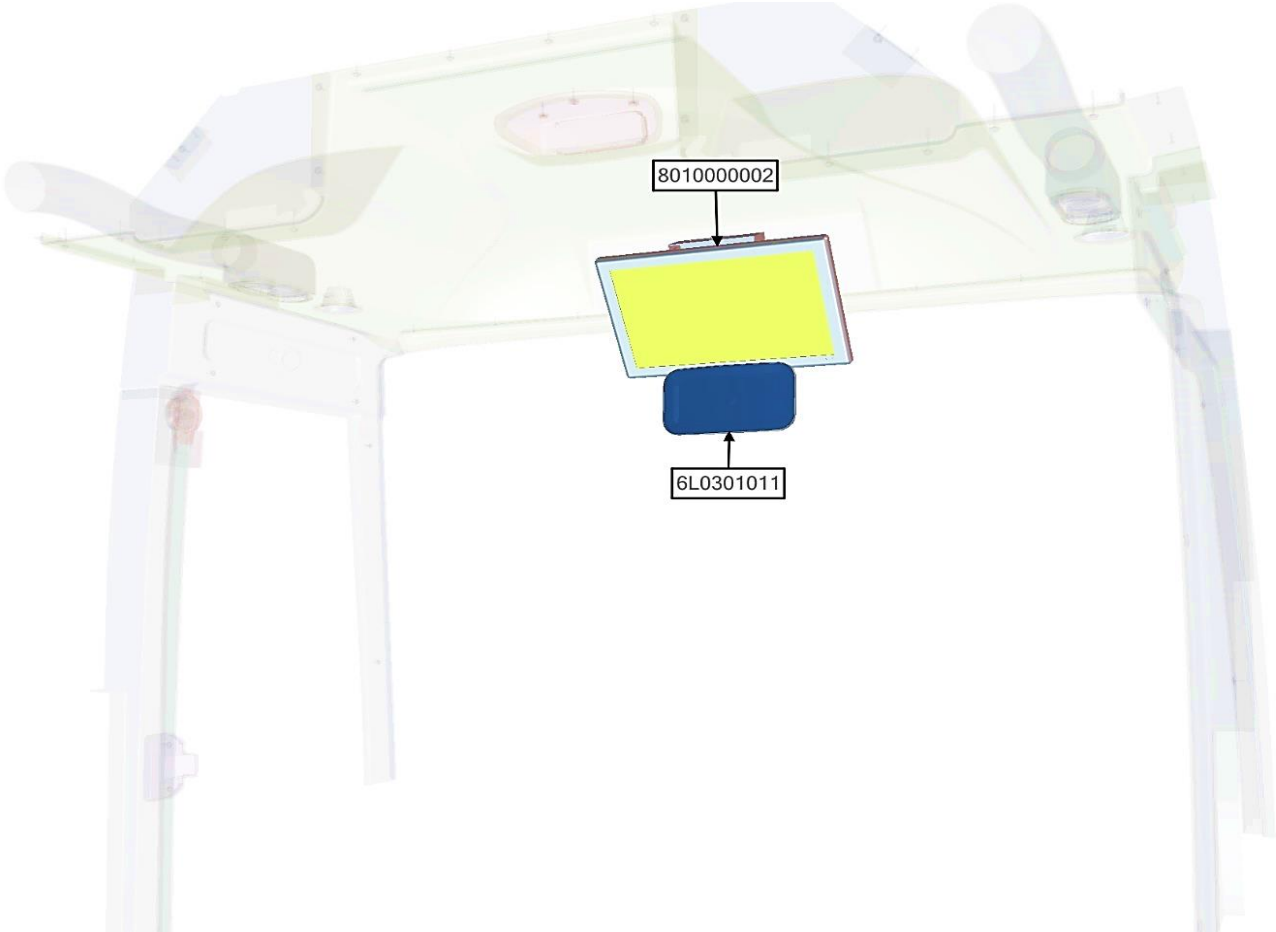

NAME_ASSB	CODE_PART NO	NAME	QTY
FUNCTIONAL SYSTEM	6L0301011	INSIDE MIRROR	1
	8010000002	LCD 21 INCH MONITOR	1

NAME_ASSB	CODE_PART NO	NAME	QTY
FUNCTIONAL SYSTEM			

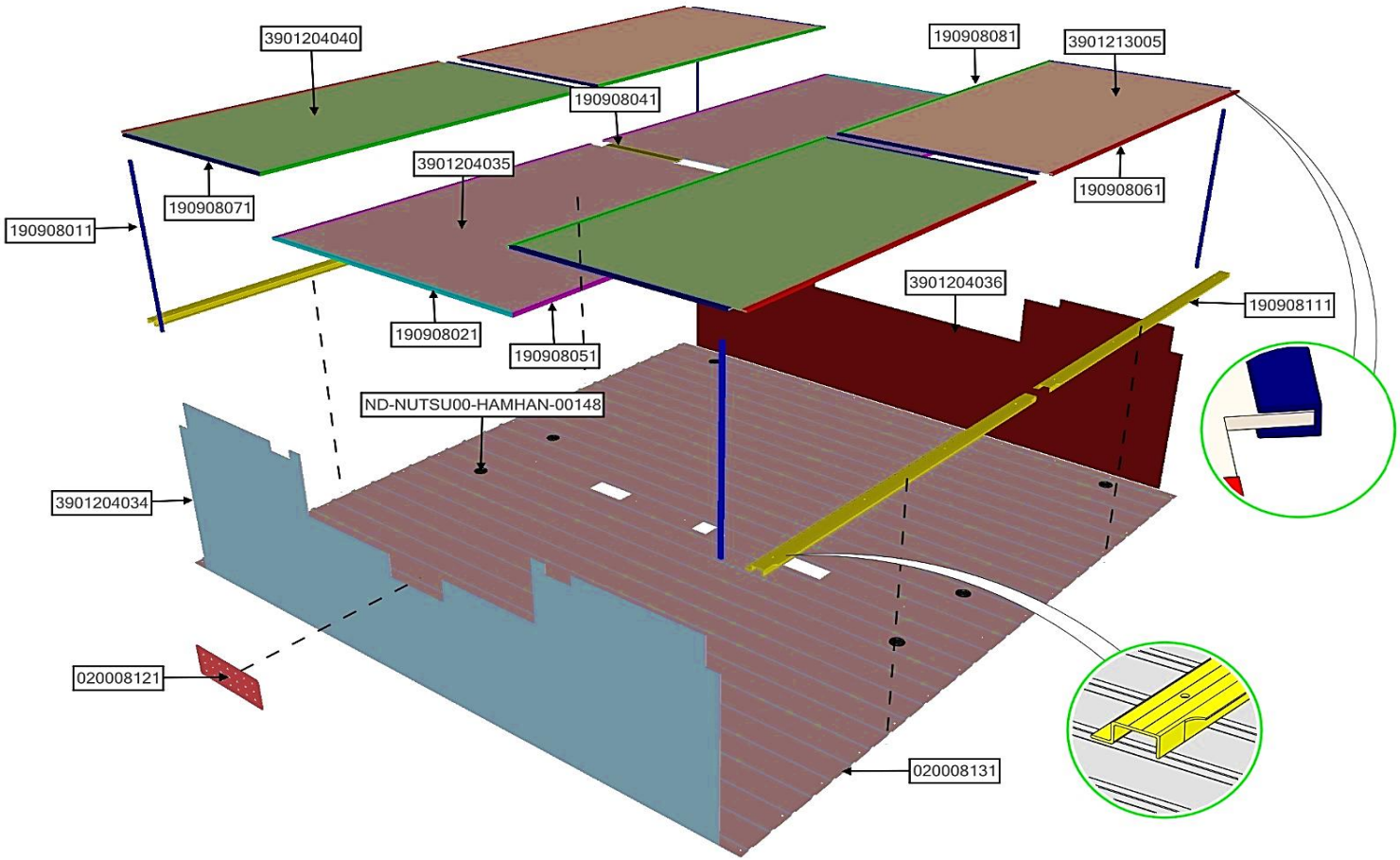

NAME_ASSB	CODE_PART NO	NAME	QTY
LUGGAGE COMPARTMENT	020008121	LUGGAGE COMPARTMENT COVER	1
	190908111	MOULDING	4
	190908011	MOULDING	4
	190908051	MOULDING	4
	190908021	MOULDING	2
	190908061	MOULDING	4
	190908071	MOULDING	8
	3901204036	LUGGAGE COMPARTMENT PANEL 03	1

NAME_ASSB	CODE_PART NO	NAME	QTY
LUGGAGE COMPARTMENT	190908081	MOULDING	4
	190908041	MOULDING	4
	ND-NUTSU00-HAMHAN-00148	DRAIN RUBBER	8
	3901204040	LUGGAGE COMPARTMENT PANEL 04	2
	3901213005	LUGGAGE COMPARTMENT PANEL 05	2
	3901204034	LUGGAGE COMPARTMENT PANEL 01	1
	3901204035	LUGGAGE COMPARTMENT PANEL 02	2
	020008131	STAINLESS STEEL SHEET	2

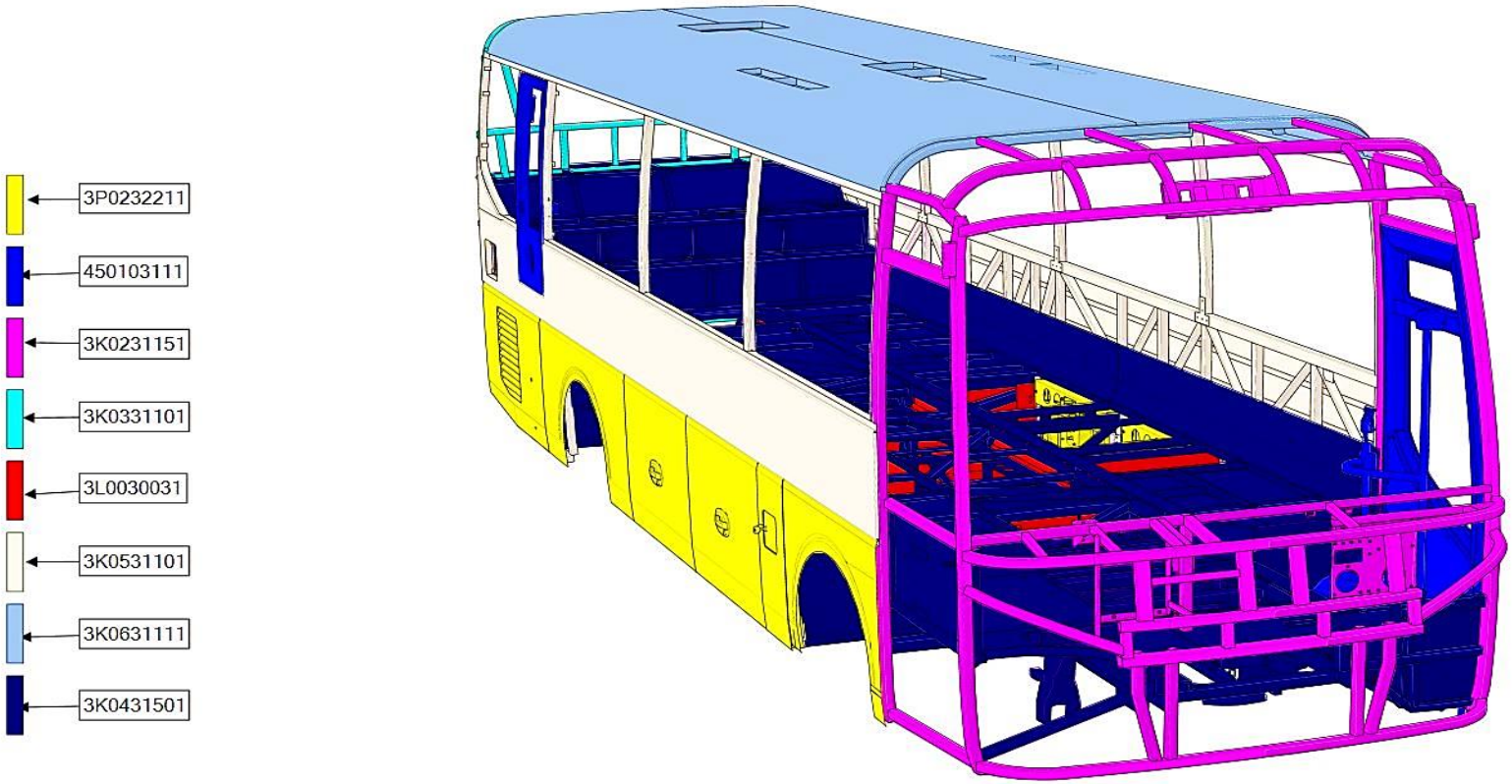

NAME_ASSB	CODE_PART NO	NAME	QTY
BODY	450103111	DOOR - ASSY	1
	3K0231151	FRONT FRAME - ASSY	1
	3K0331101	REAR FRAME - ASSY	1
	3K0431501	FLOOR FRAME - ASSY	1
	3K0531101	SIDE FRAME - ASSY	1
	3K0631111	ROOF FRAME - ASSY	1
	3L0030031	STEEL SHEET - ASSY	1

NAME_ASSB	CODE_PART NO	NAME	QTY
BODY	3P0232211	FLAP - ASSY	1

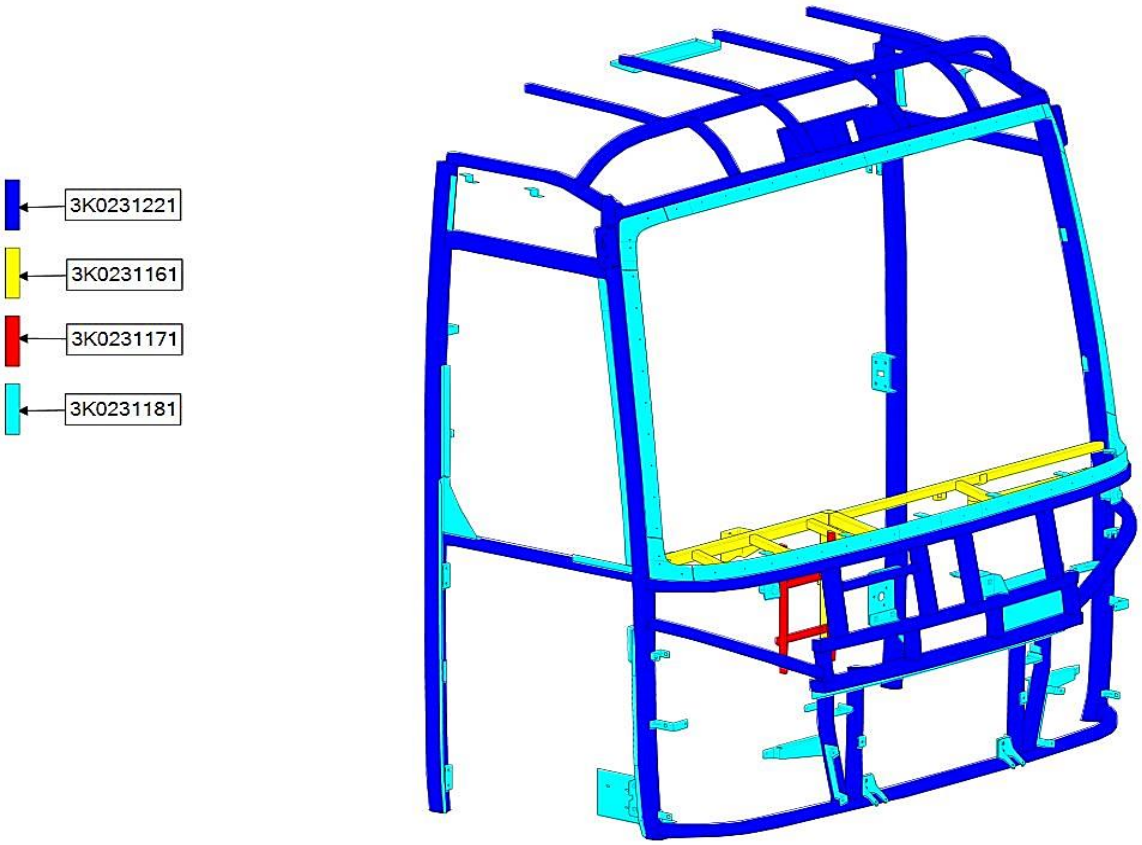

NAME_ASSB	CODE_PART NO	NAME	QTY
FRONT FRAME - ASSY	3K0231181	CONNECTING ITEM	1
	3K0231171	SQUARE PIPE	1
	3K0231161	DASHBOARD FRAME	1
	3K0231221	FRONT FRAME	1

NAME_ASSB	CODE_PART NO	NAME	QTY
FRONT FRAME - ASSY			

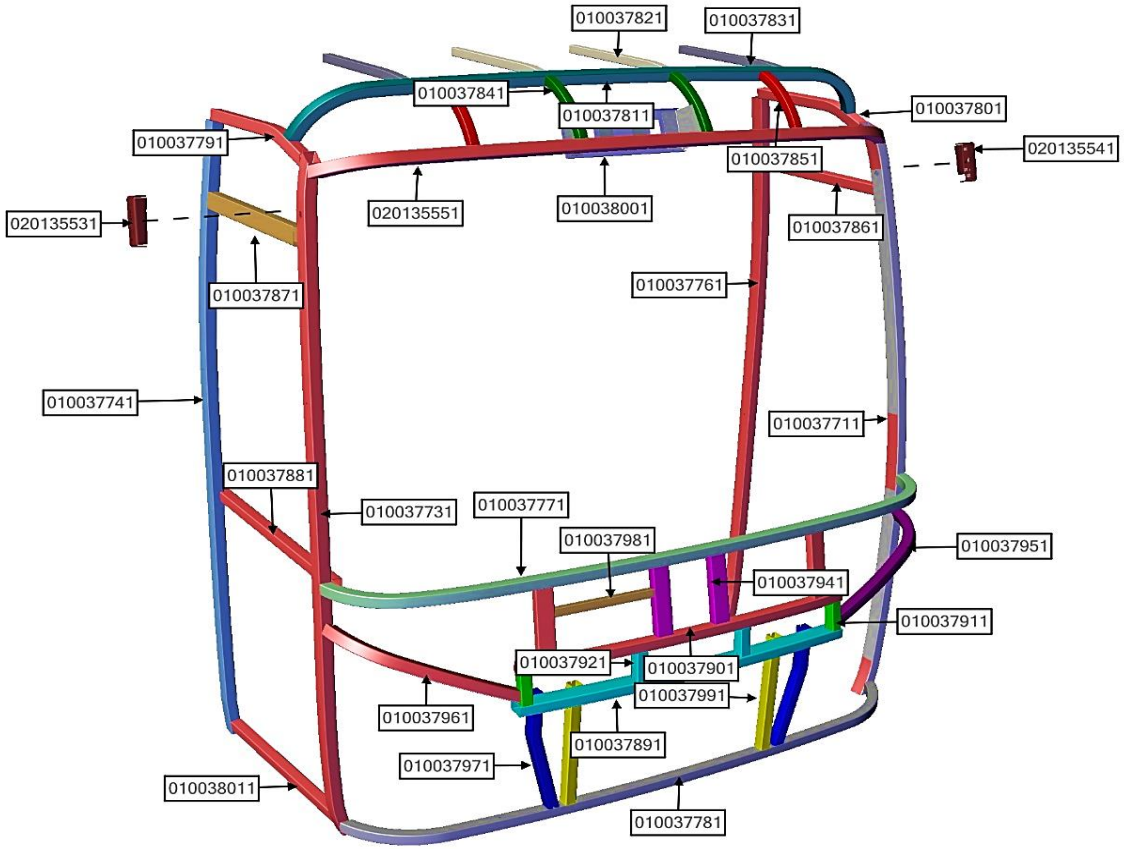

NAME_ASSB	CODE_PART NO	NAME	QTY
FRONT FRAME	010037711	SQUARE PIPE 01	1
	010037731	SQUARE PIPE 02	1
	010037741	SQUARE PIPE 03	1
	010037761	SQUARE PIPE 04	1
	010037771	SQUARE PIPE 05	1
	010037781	SQUARE PIPE 06	1
	010037791	SQUARE PIPE 07	1

NAME_ASSB	CODE_PART NO	NAME	QTY
FRONT FRAME	010037801	SQUARE PIPE 08	1
	010037811	SQUARE PIPE 09	1
	010037821	SQUARE PIPE 10	2
	010037831	SQUARE PIPE 11	2
	010037841	SQUARE PIPE 12	2
	010037851	SQUARE PIPE 13	2
	010037861	SQUARE PIPE 14	1

NAME_ASSB	CODE_PART NO	NAME	QTY
FRONT FRAME	010037871	SQUARE PIPE 15	1
	010037881	SQUARE PIPE 16	1
	010037891	SQUARE PIPE 17	1
	010037901	SQUARE PIPE 18	1
	010037911	SQUARE PIPE 19	2
	010037921	SQUARE PIPE 20	2
	010037941	SQUARE PIPE 22	2
	010037951	SQUARE PIPE 23	1

NAME_ASSB	CODE_PART NO	NAME	QTY
FRONT FRAME	010037961	SQUARE PIPE 24	1
	010037971	SQUARE PIPE 25	2
	010037981	SQUARE PIPE 26	1
	010037991	SQUARE PIPE 27	2
	010038001	SQUARE PIPE 28	1
	010038011	SQUARE PIPE 29	1
	020135531	BRACKET	1
	020135541	BRACKET	1
	020135551	BRACKET	1

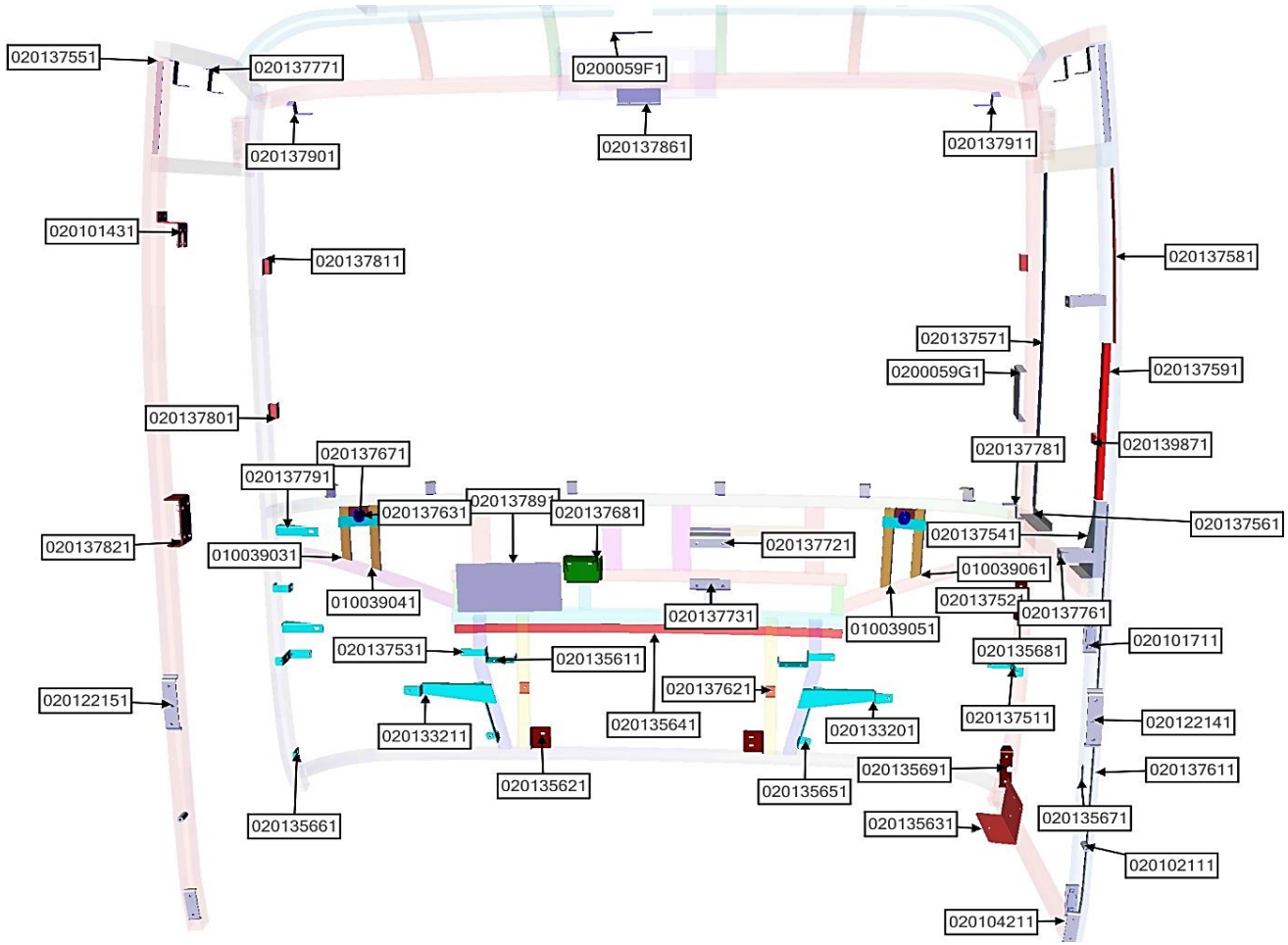

NAME_ASSB	CODE_PART NO	NAME	QTY
CONNECTING ITEM	0200059F1	BRACKET	1
	0200059G1	BRACKET	1
	010039031	SQUARE PIPE 01	1
	010039041	SQUARE PIPE 02	1
	010039051	SQUARE PIPE 03	1
	010039061	SQUARE PIPE 04	1
	020101431	DOOR VALVE BRACKET	1

NAME_ASSB	CODE_PART NO	NAME	QTY
CONNECTING ITEM	020101711	BRACKET	2
	020102111	BRACKET	2
	020104211	BRACKET	2
	020122141	MOUNTING	1
	020122151	MOUNTING	1
	020133201	BRACKET	1
	020133211	BRACKET	1

NAME_ASSB	CODE_PART NO	NAME	QTY
CONNECTING ITEM	020135611	BRACKET	2
	020135621	BRACKET	2
	020135631	BRACKET	1
	020135641	BRACKET	1
	020135651	BRACKET	2
	020135661	BRACKET	2
	020135671	BRACKET	1
	020135681	BRACKET	1
	020135691	BRACKET	1
	020137511	BRACKET	2
	020137521	BRACKET	2
	020137531	BRACKET	2
	020137541	BRACKET	1
	020137551	BRACKET	2
	020137561	BRACKET	1
	020137571	BRACKET	1
	020137581	BRACKET	1
	020137591	BRACKET	1
	020137611	BRACKET	1
	020137621	BRACKET	2

NAME_ASSB	CODE_PART NO	NAME	QTY
CONNECTING ITEM	020137631	BRACKET	2
	020137671	BRACKET	2
	020137681	BRACKET	1
	020137721	BRACKET	1
	020137731	BRACKET	1
	020137761	BRACKET	2
	020137771	BRACKET	4
	020137781	BRACKET	7
	020137791	BRACKET	2
	020137801	BRACKET	1
	020137811	BRACKET	2
	020137821	BRACKET	1
	020137861	BRACKET	1
	020137891	BRACKET	1
	020137901	BRACKET	1
	020137911	BRACKET	1
	020139871	BRACKET	1

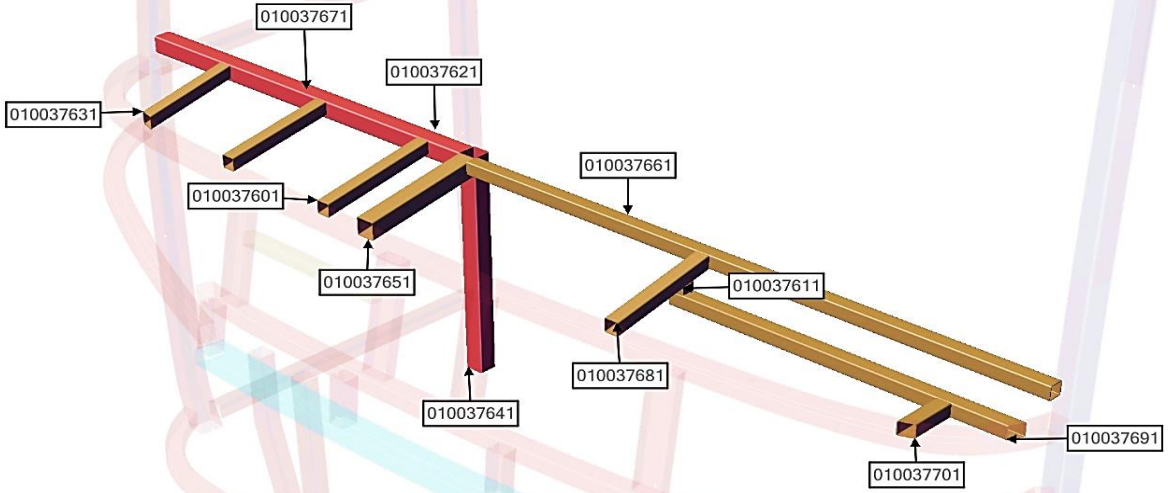

NAME_ASSB	CODE_PART NO	NAME	QTY
DASHBOARD FRAME	010037601	SQUARE PIPE 01	1
	010037611	SQUARE PIPE 02	1
	010037621	SQUARE PIPE 03	1
	010037631	SQUARE PIPE 04	1
	010037641	SQUARE PIPE 05	1
	010037651	SQUARE PIPE 06	1
	010037661	SQUARE PIPE 07	1

NAME_ASSB	CODE_PART NO	NAME	QTY
DASHBOARD FRAME	010037671	SQUARE PIPE 08	1
	010037681	SQUARE PIPE 09	1
	010037691	SQUARE PIPE 10	1
	010037701	SQUARE PIPE 11	1

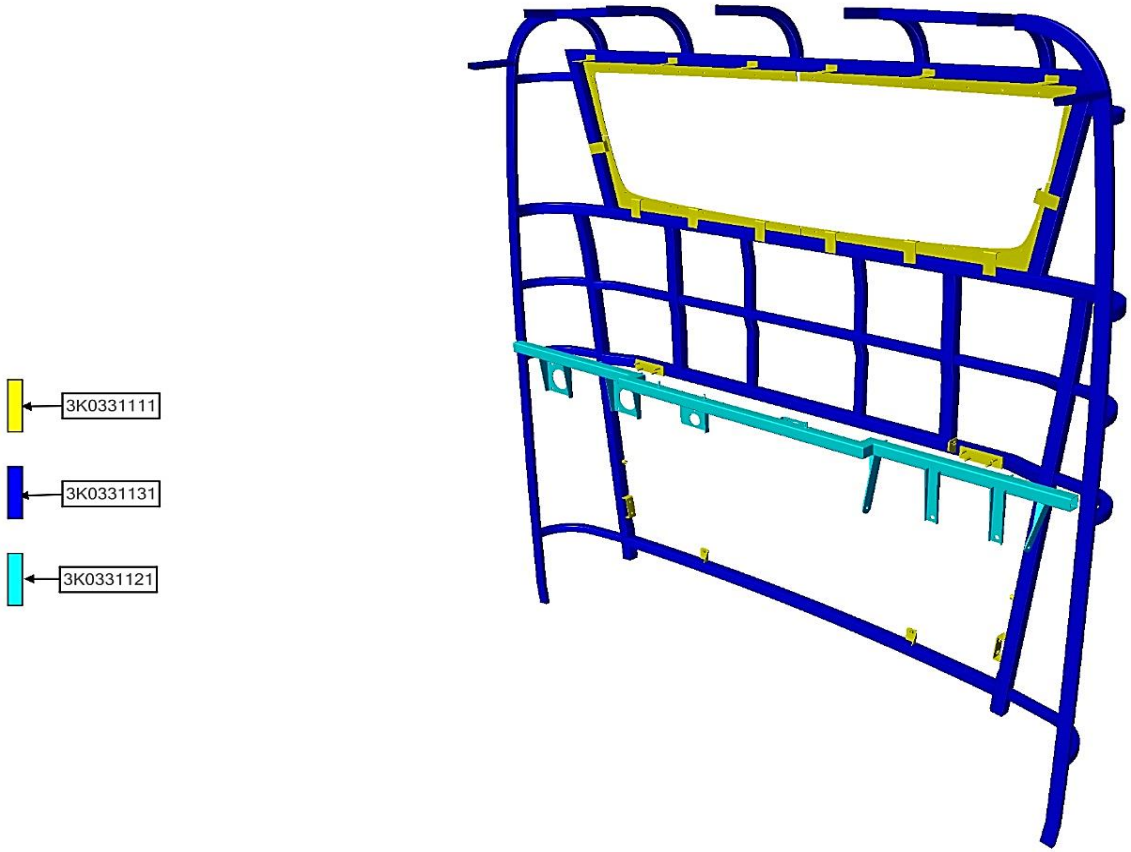

NAME_ASSB	CODE_PART NO	NAME	QTY
REAR FRAME - ASSY	3K0331111	CONNECTING ITEM	1
	3K0331121	EXPANDING WATER TANK SQUARE PIPE	1
	3K0331131	REAR FRAME	1

NAME_ASSB	CODE_PART NO	NAME	QTY
REAR FRAME - ASSY			

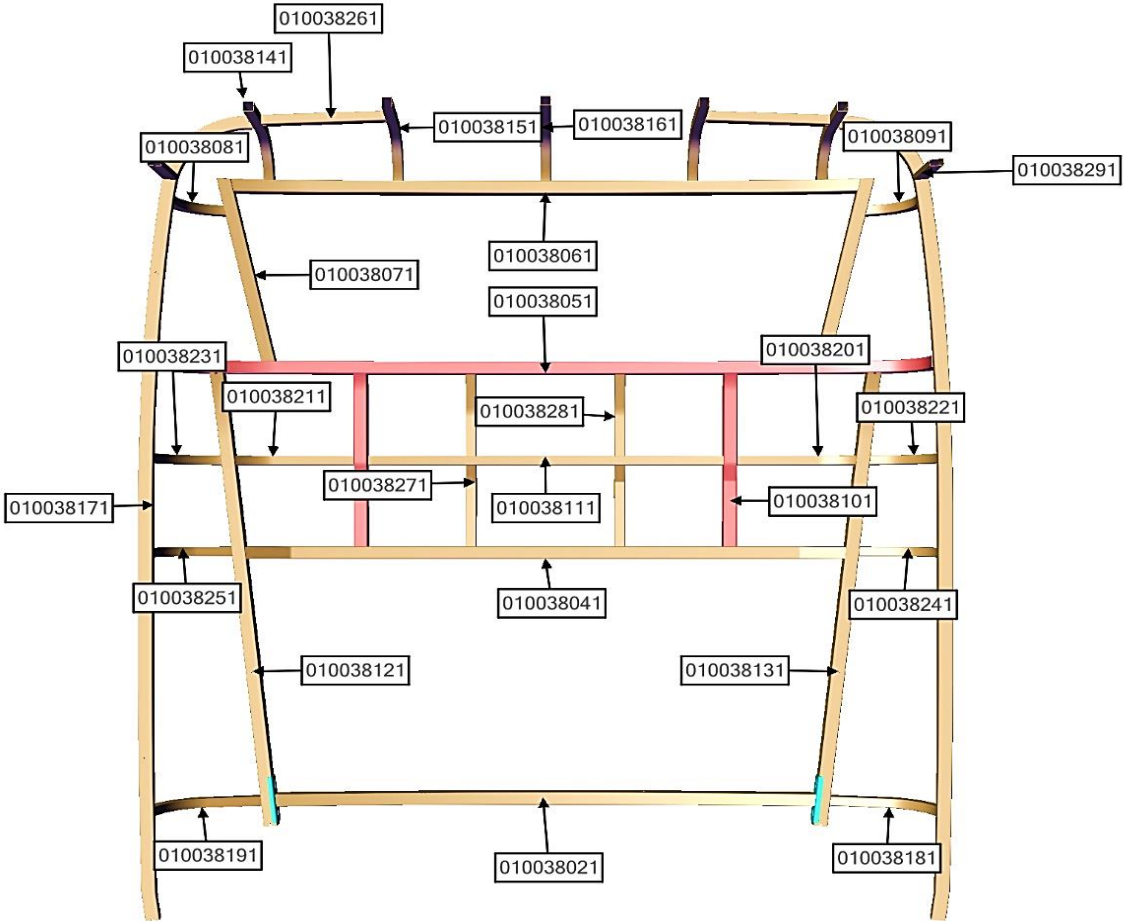

NAME_ASSB	CODE_PART NO	NAME	QTY
REAR FRAME	010038031	SQUARE PIPE 01	1
	010038041	SQUARE PIPE 02	1
	010038051	SQUARE PIPE 03	1
	010038061	SQUARE PIPE 04	1
	010038071	SQUARE PIPE 05	2
	010038081	SQUARE PIPE 06	1
	010038091	SQUARE PIPE 07	1

NAME_ASSB	CODE_PART NO	NAME	QTY
REAR FRAME	010038101	SQUARE PIPE 08	2
	010038111	SQUARE PIPE 09	1
	010038121	SQUARE PIPE 10	1
	010038131	SQUARE PIPE 11	1
	010038141	SQUARE PIPE 12	2
	010038151	SQUARE PIPE 13	2
	010038161	SQUARE PIPE 14	1

NAME_ASSB	CODE_PART NO	NAME	QTY
REAR FRAME	010038171	SQUARE PIPE 15	2
	010038181	SQUARE PIPE 16	1
	010038191	SQUARE PIPE 17	1
	010038201	SQUARE PIPE 18	1
	010038211	SQUARE PIPE 19	1
	010038221	SQUARE PIPE 20	1
	010038231	SQUARE PIPE 21	1

NAME_ASSB	CODE_PART NO	NAME	QTY
REAR FRAME	010038241	SQUARE PIPE 22	1
	010038251	SQUARE PIPE 23	1
	010038261	SQUARE PIPE 24	2
	010038271	SQUARE PIPE 25	2
	010038281	SQUARE PIPE 26	2
	010038291	SQUARE PIPE 27	2

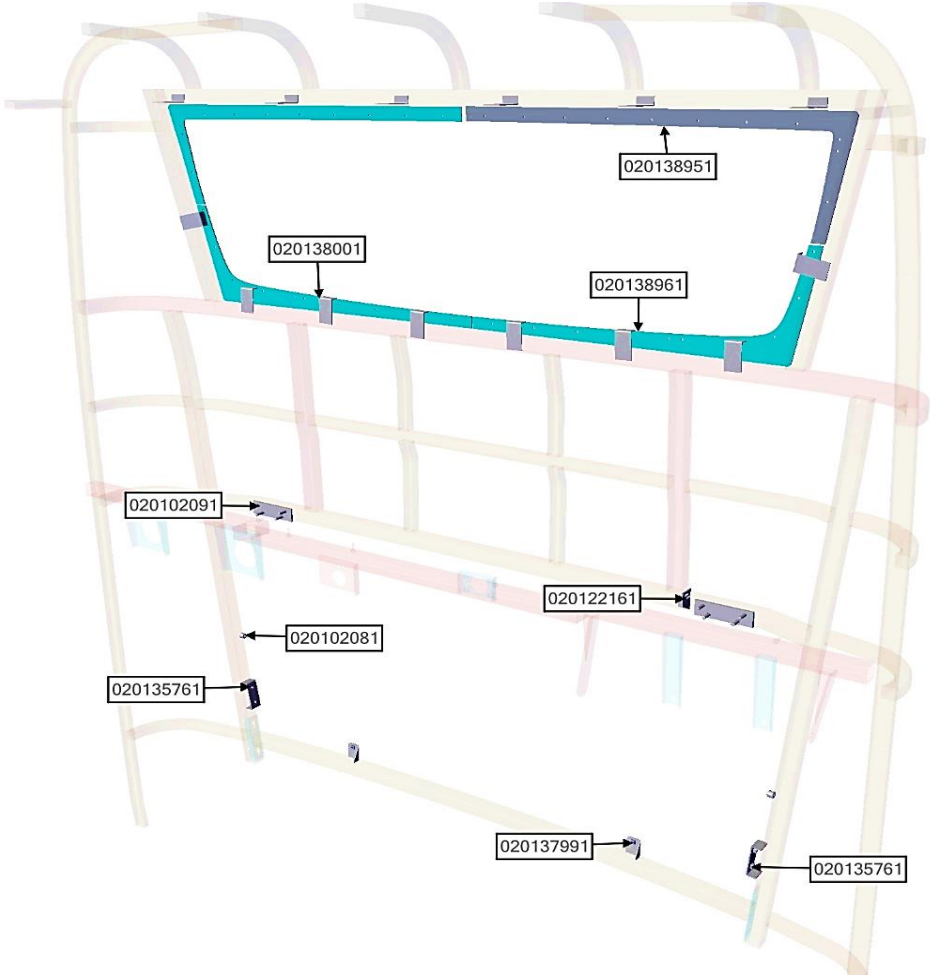

NAME_ASSB	CODE_PART NO	NAME	QTY
CONNECTING ITEM	020102081	BRACKET	2
	020102091	BRACKET	2
	020122161	BRACKET	1
	020135761	BRACKET	1
	020135761	BRACKET	1
	020137991	BRACKET	2
	020138001	BRACKET	14

NAME_ASSB	CODE_PART NO	NAME	QTY
CONNECTING ITEM	020138951	DAM-SIDE WINDOW 01	2
	020138961	DAM-SIDE WINDOW 02	2

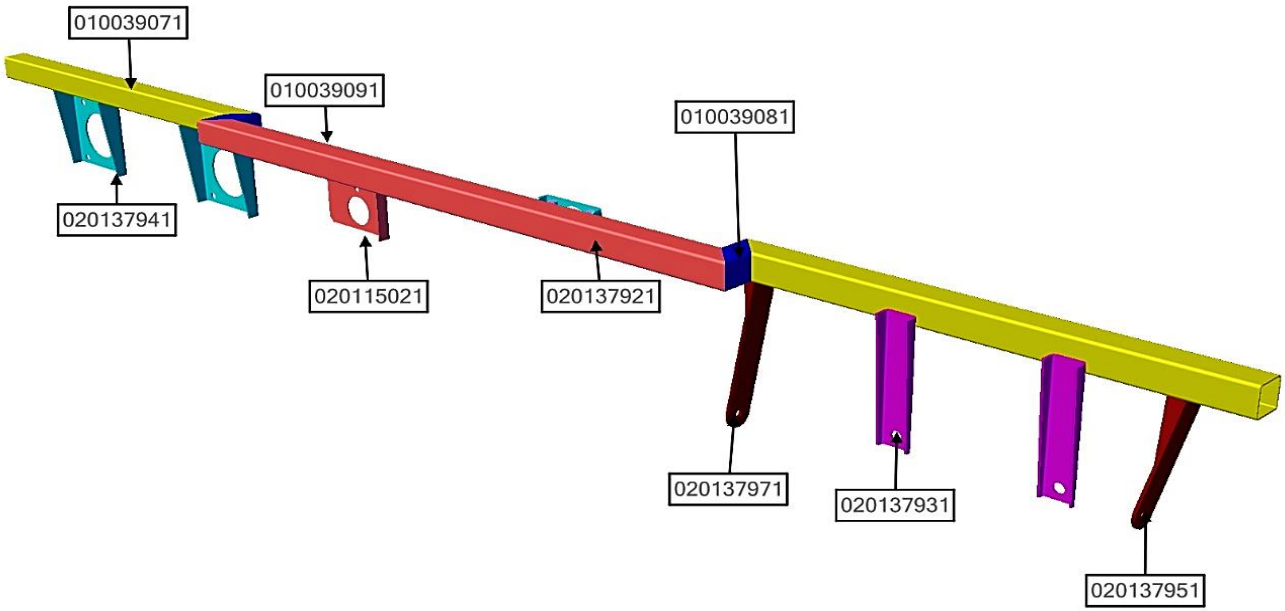

NAME_ASSB	CODE_PART NO	NAME	QTY
EXPANDING WATER TANK SQUARE PIPE	010039071	SQUARE PIPE 01	2
	010039081	SQUARE PIPE 02	2
	010039091	SQUARE PIPE 03	1
	020115021	BRACKET	1
	020137921	BRACKET	1
	020137931	BRACKET	2
	020137941	BRACKET	2

NAME_ASSB	CODE_PART NO	NAME	QTY
EXPANDING WATER TANK SQUARE PIPE	020137951	BRACKET	1
	020137971	BRACKET	1

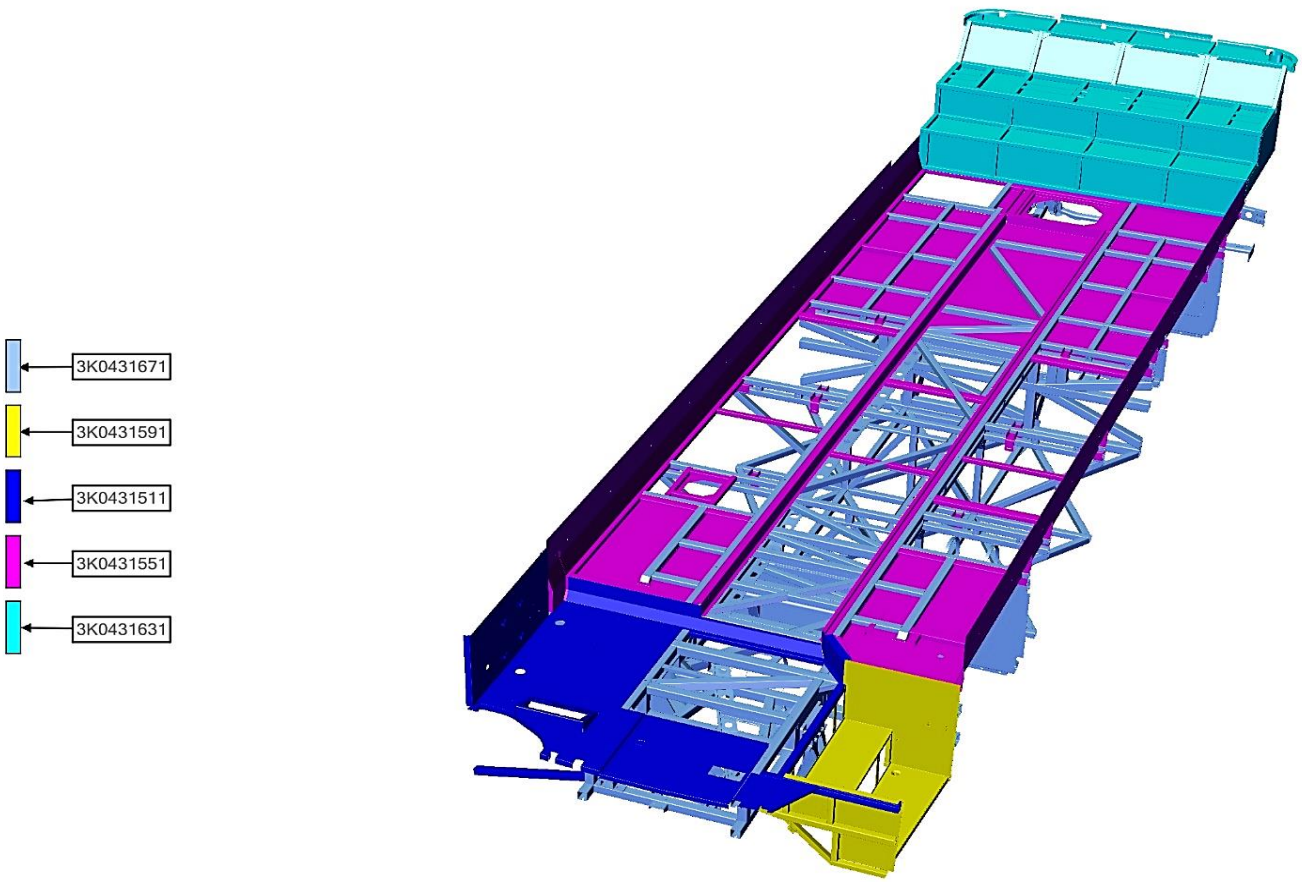

NAME_ASSB	CODE_PART NO	NAME	QTY
FLOOR FRAME - ASSY	3K0431511	CABIN FLOOR FRAME - ASSY	1
	3K0431551	MAIN FLOOR FRAME - ASSY	1
	3K0431591	STAIRS FRAME - ASSY	1
	3K0431631	ENGINE FLOOR FRAME - ASSY	1
	3K0431671	CHASSIS	1

NAME_ASSB	CODE_PART NO	NAME	QTY
FLOOR FRAME - ASSY			

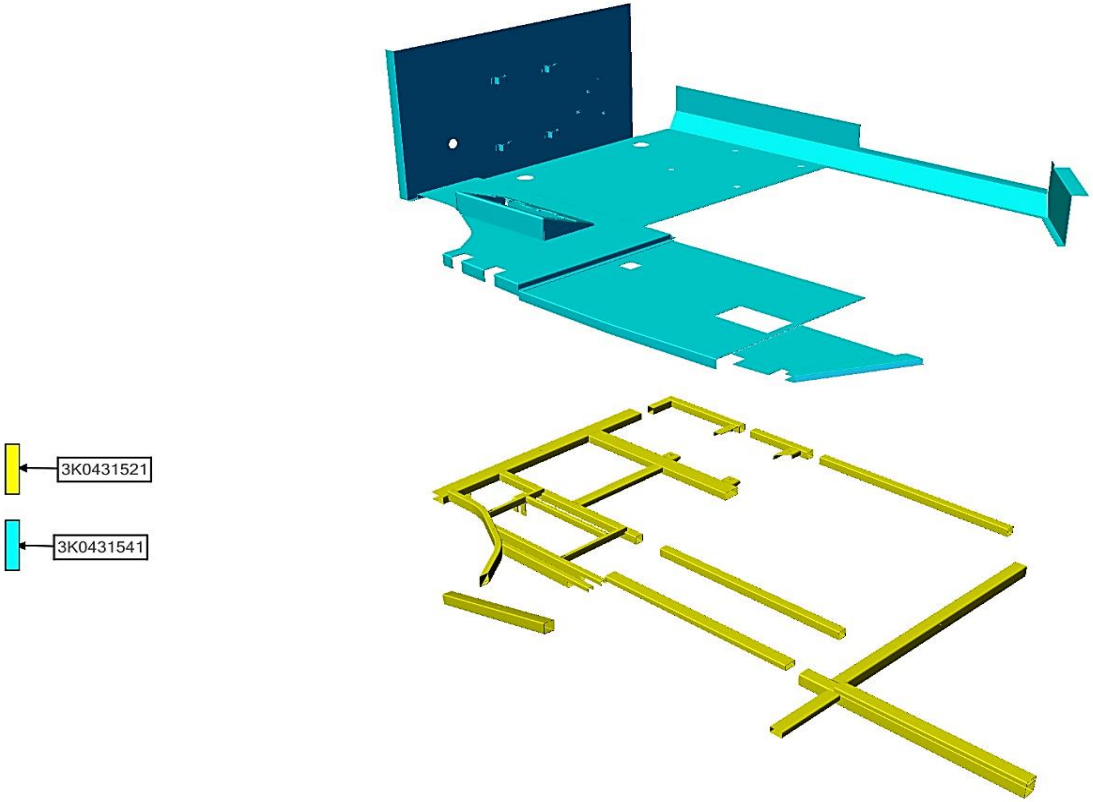

NAME_ASSB	CODE_PART NO	NAME	QTY
CABIN FLOOR FRAME - ASSY	3K0431521	CABIN FLOOR FRAME	1
	3K0431541	STEEL SHEET - ASSY	1

NAME_ASSB	CODE_PART NO	NAME	QTY
CABIN FLOOR FRAME - ASSY			

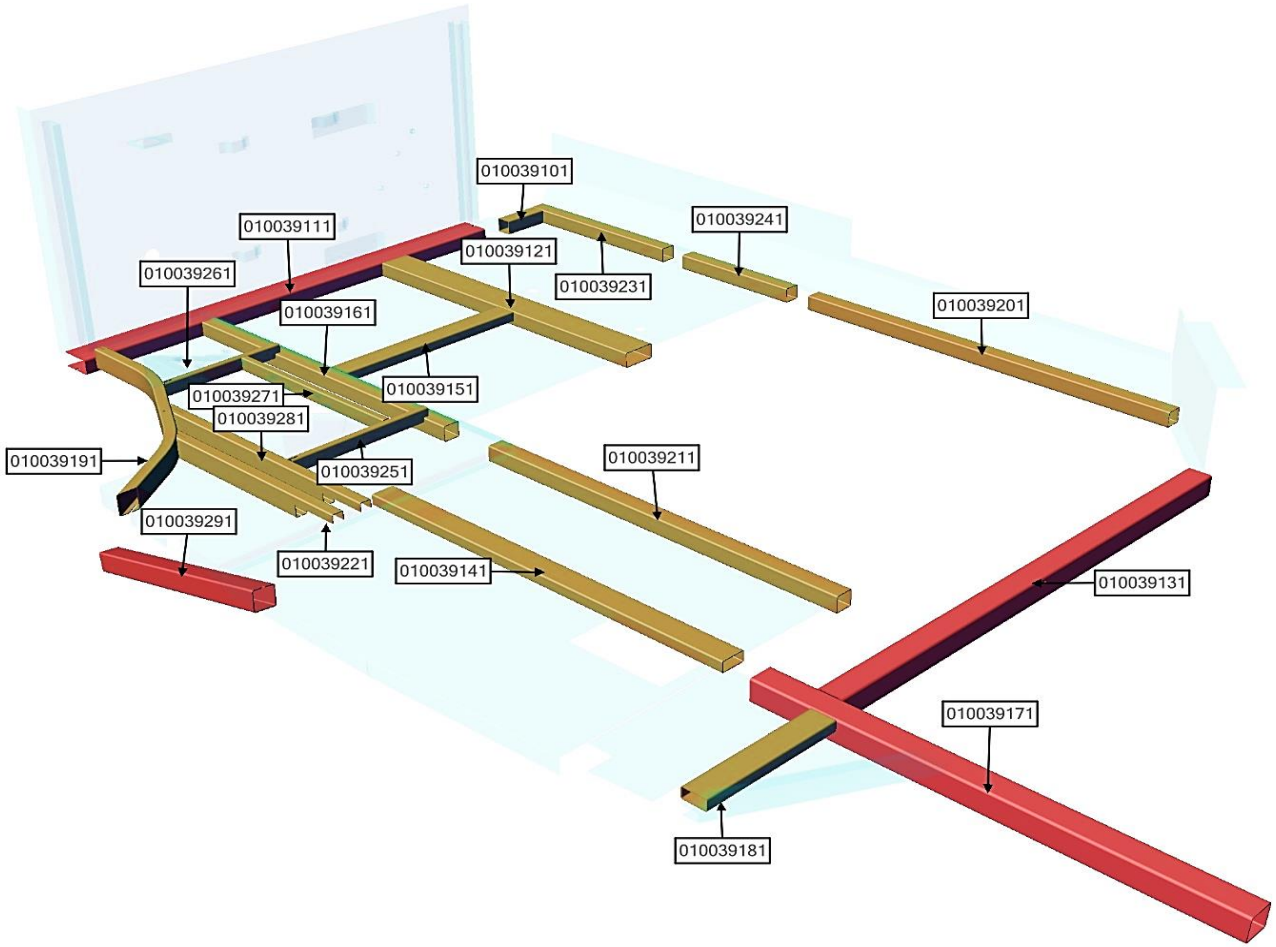

NAME_ASSB	CODE_PART NO	NAME	QTY
CABIN FLOOR FRAME	010039101	SQUARE PIPE 01	1
	010039111	SQUARE PIPE 02	1
	010039121	SQUARE PIPE 03	1
	010039131	SQUARE PIPE 04	1
	010039141	SQUARE PIPE 05	1
	010039151	SQUARE PIPE 06	1
	010039161	SQUARE PIPE 07	1

NAME_ASSB	CODE_PART NO	NAME	QTY
CABIN FLOOR FRAME	010039171	SQUARE PIPE 08	1
	010039181	SQUARE PIPE 09	1
	010039191	SQUARE PIPE 10	1
	010039201	CABIN FLOOR SQUARE PIPE 11	1
	010039211	SQUARE PIPE 12	1
	010039221	SQUARE PIPE 13	1
	010039231	SQUARE PIPE 14	1

NAME_ASSB	CODE_PART NO	NAME	QTY
CABIN FLOOR FRAME	010039241	SQUARE PIPE 15	1
	010039251	SQUARE PIPE 16	1
	010039261	SQUARE PIPE 17	1
	010039271	SQUARE PIPE 18	1
	010039281	SQUARE PIPE 19	1
	010039291	SQUARE PIPE 20	1

NAME_ASSB	CODE_PART NO	NAME	QTY
CABIN FLOOR FRAME			

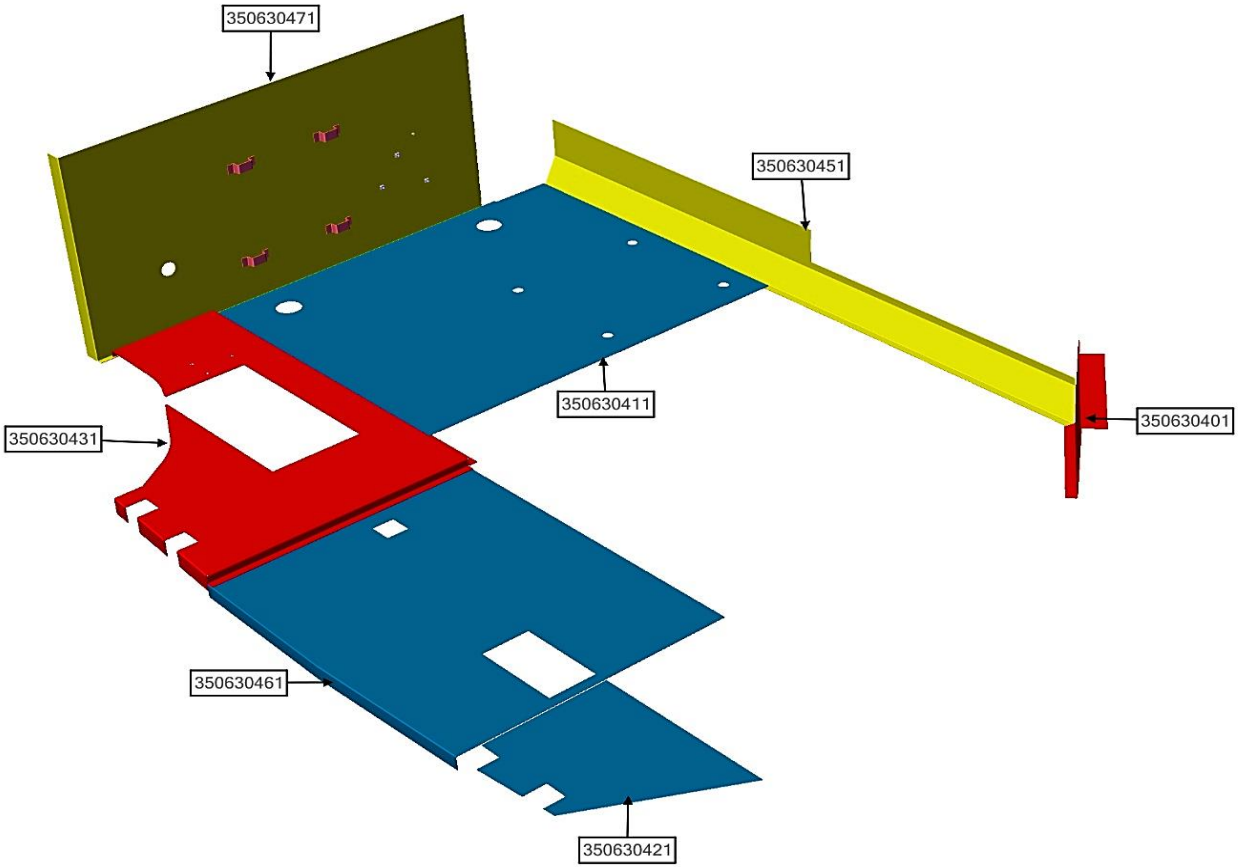

NAME_ASSB	CODE_PART NO	NAME	QTY
STEEL SHEET ASSY	350630401	STEEL SHEET	1
	350630411	STEEL SHEET	1
	350630421	STEEL SHEET	1
	350630431	STEEL SHEET	1
	350630451	STEEL SHEET	1
	350630461	STEEL SHEET	1
	350630471	STEEL SHEET	1

NAME_ASSB	CODE_PART NO	NAME	QTY
STEEL SHEET ASSY			

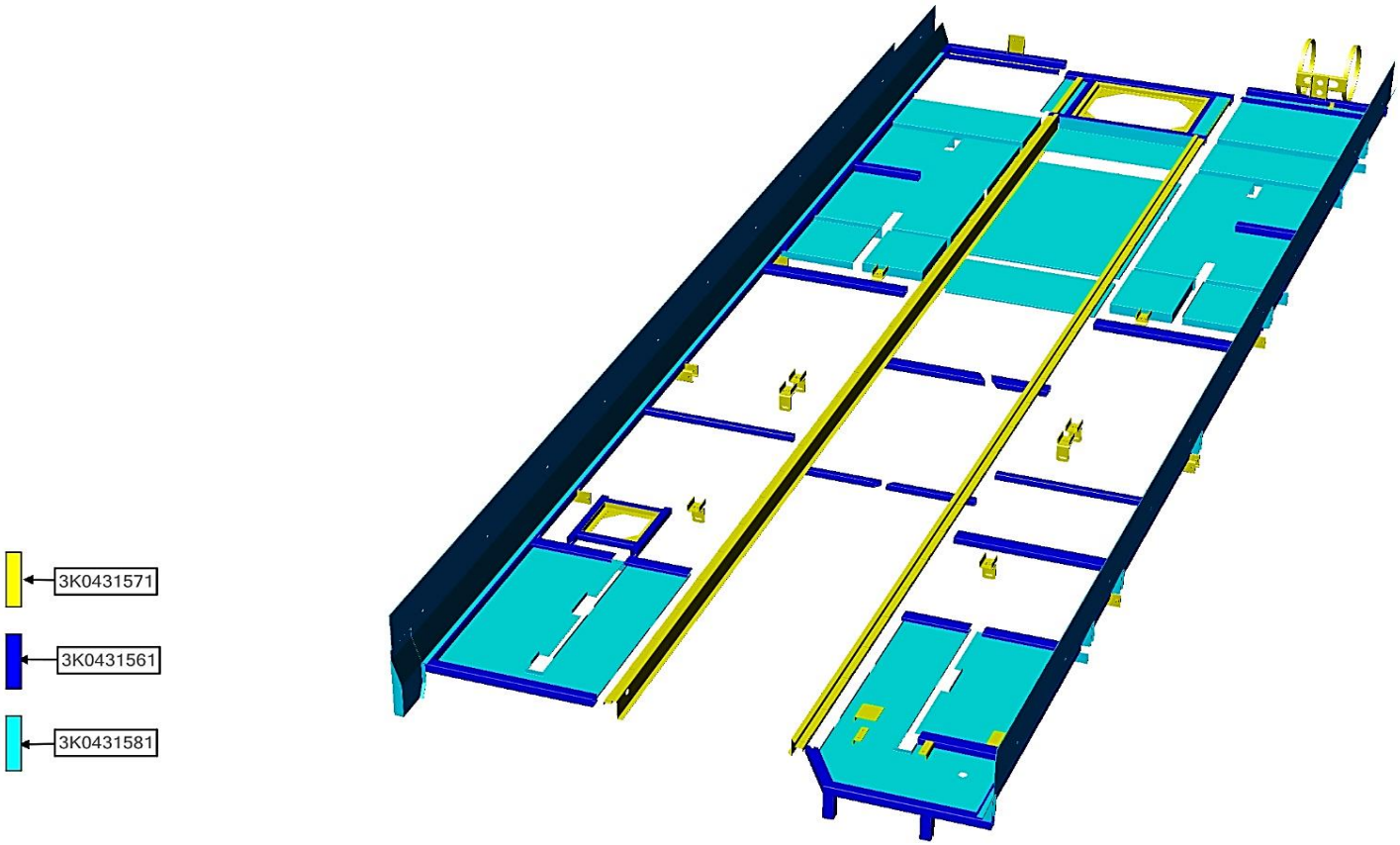

NAME_ASSB	CODE_PART NO	NAME	QTY
MAIN FLOOR FRAME - ASSY	3K0431561	MAIN FLOOR FRAME - ASSY	1
	3K0431571	CONNECTING ITEM	1
	3K0431581	STEEL SHEET - ASSY	1

NAME_ASSB	CODE_PART NO	NAME	QTY
MAIN FLOOR FRAME - ASSY			

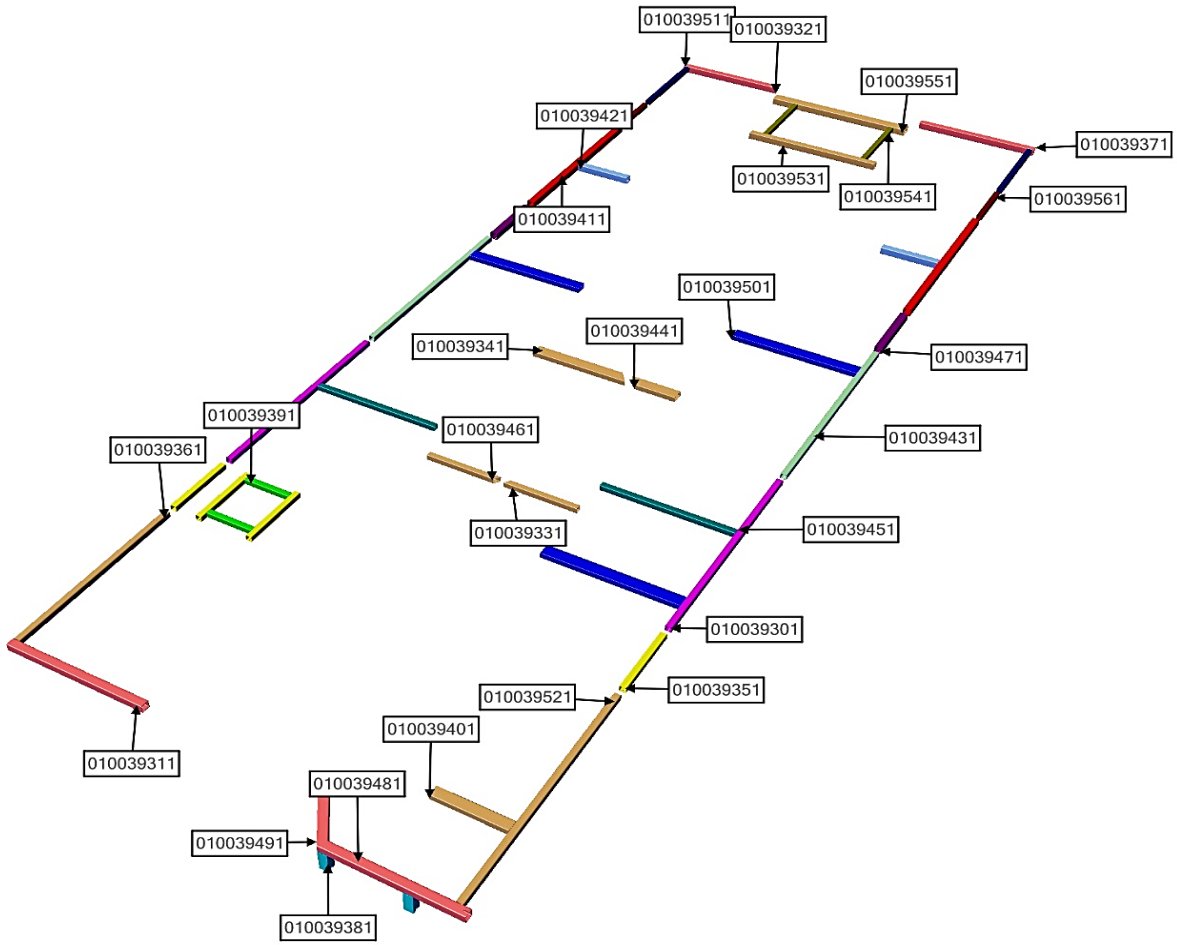

NAME_ASSB	CODE_PART NO	NAME	QTY
MAIN FLOOR FRAME - ASSY	010039301	SQUARE PIPE 01	2
	010039311	SQUARE PIPE 02	1
	010039321	SQUARE PIPE 03	1
	010039331	SQUARE PIPE 04	1
	010039341	SQUARE PIPE 05	1
	010039351	SQUARE PIPE 06	4
	010039361	SQUARE PIPE 07	1

NAME_ASSB	CODE_PART NO	NAME	QTY
MAIN FLOOR FRAME - ASSY	010039371	SQUARE PIPE 08	1
	010039381	SQUARE PIPE 09	2
	010039391	SQUARE PIPE 10	2
	010039401	SQUARE PIPE 11	1
	010039411	SQUARE PIPE 12	2
	010039421	SQUARE PIPE 13	2
	010039431	SQUARE PIPE 14	2

NAME_ASSB	CODE_PART NO	NAME	QTY
MAIN FLOOR FRAME - ASSY	010039441	SQUARE PIPE 15	1
	010039451	SQUARE PIPE 16	2
	010039461	SQUARE PIPE 17	1
	010039471	SQUARE PIPE 18	2
	010039481	SQUARE PIPE 19	1
	010039491	SQUARE PIPE 20	1
	010039501	SQUARE PIPE 21	3

NAME_ASSB	CODE_PART NO	NAME	QTY
MAIN FLOOR FRAME - ASSY	010039511	SQUARE PIPE 22	2
	010039521	SQUARE PIPE 23	1
	010039531	SQUARE PIPE 24	1
	010039541	SQUARE PIPE 25	2
	010039551	SQUARE PIPE 26	1
	010039561	SQUARE PIPE 27	2

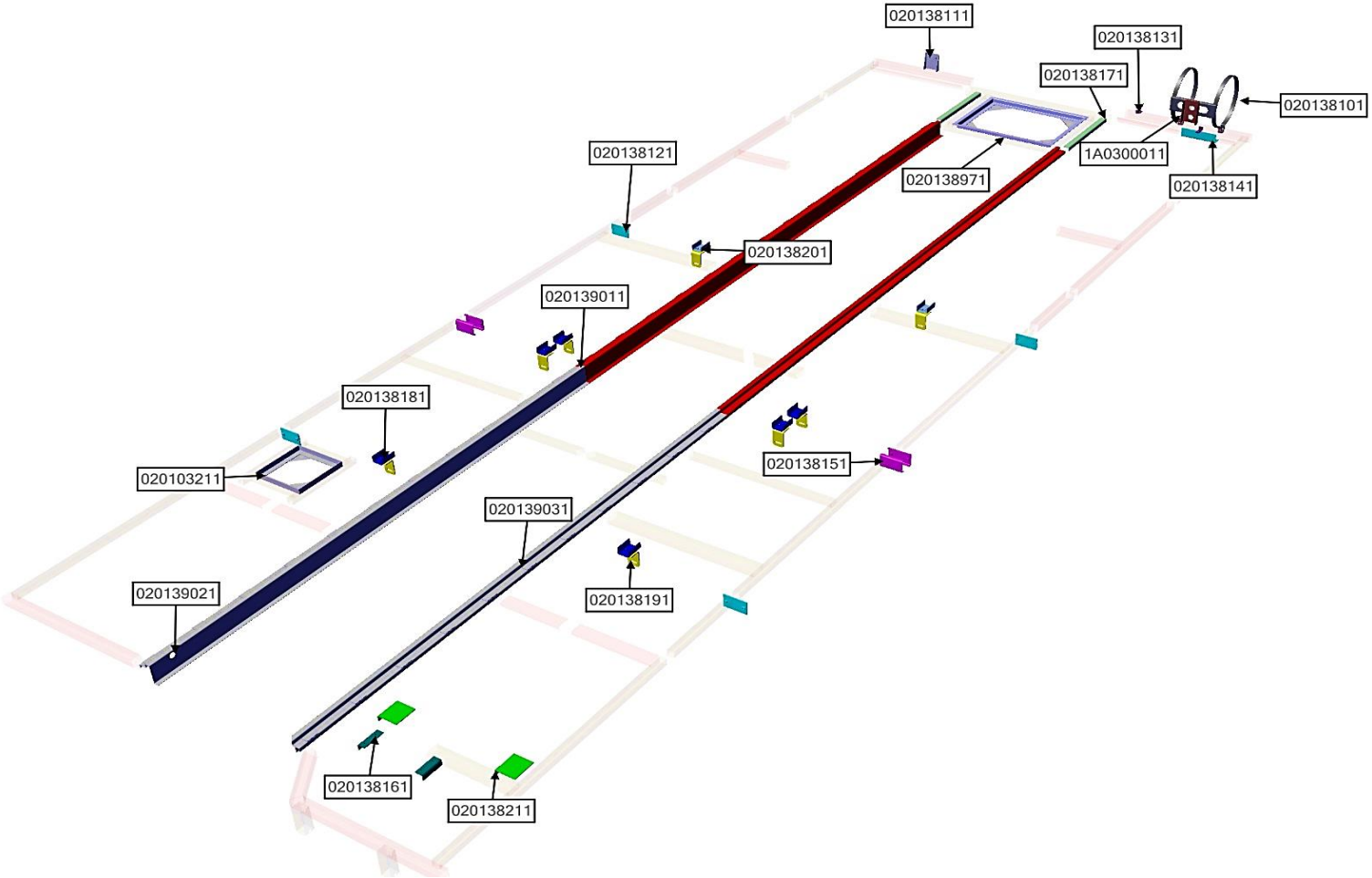

NAME_ASSB	CODE_PART NO	NAME	QTY
CONNECTING ITEM	1A0300011	BELT TANK	1
	020103211	OIL TANK COVER FRAME	1
	020138101	BRACKET	1
	020138111	BRACKET	1
	020138121	BRACKET	4
	020138131	BRACKET	2
	020138141	BRACKET	1

NAME_ASSB	CODE_PART NO	NAME	QTY
CONNECTING ITEM	020138151	BRACKET	4
	020138161	BRACKET	2
	020138171	BRACKET	2
	020138181	BRACKET	6
	020138191	BRACKET	8
	020138201	BRACKET	2
	020138211	BRACKET	2

NAME_ASSB	CODE_PART NO	NAME	QTY
CONNECTING ITEM	020138971	TRANSMISSION CHECKING HATCHES	1
	020139011	SEAT TRACK 01	2
	020139021	SEAT TRACK 03	1
	020139031	SEAT TRACK 03	1

NAME_ASSB	CODE_PART NO	NAME	QTY
CONNECTING ITEM			

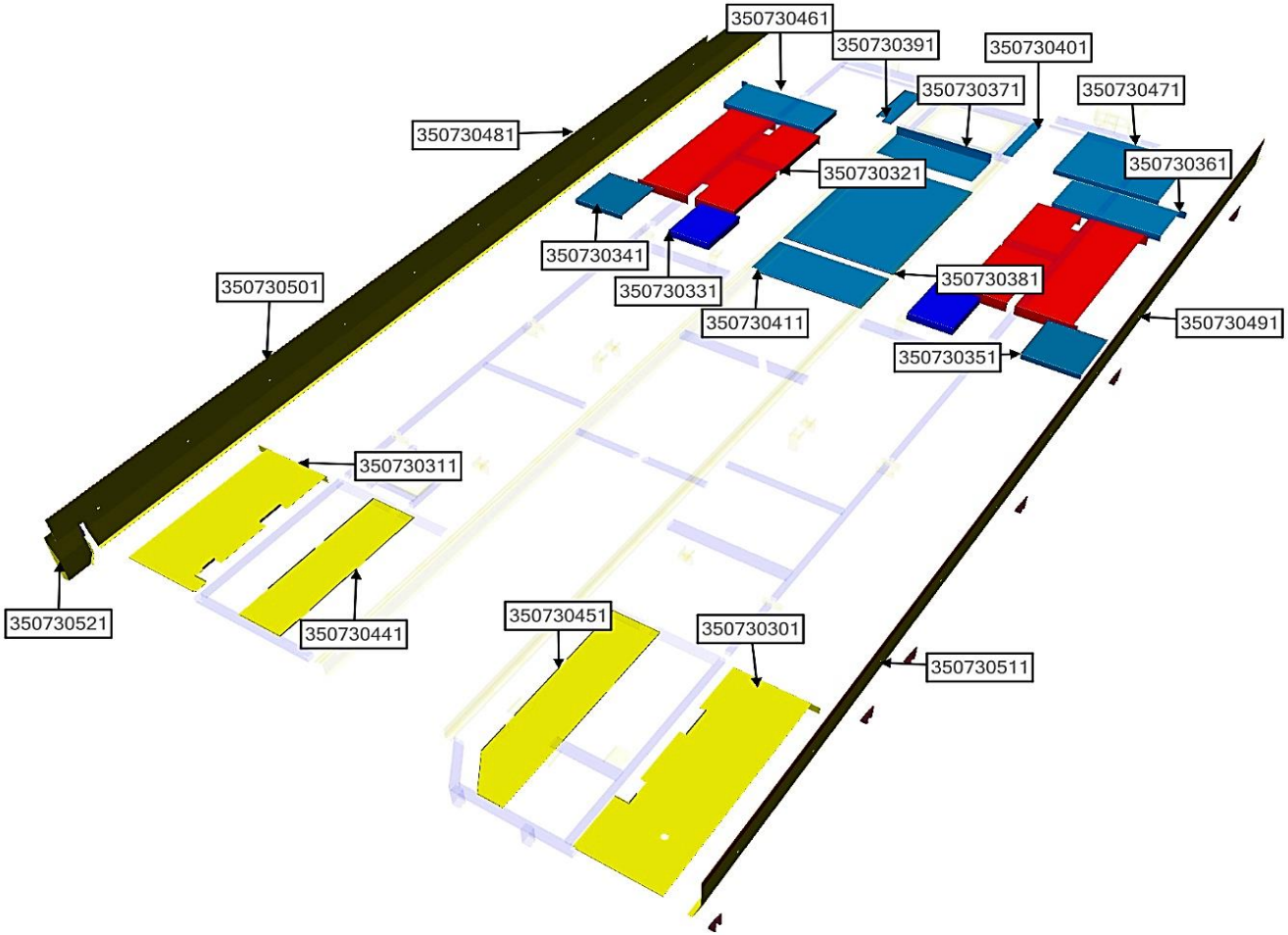

NAME_ASSB	CODE_PART NO	NAME	QTY
STEEL SHEET ASSY	350730301	STEEL SHEET	1
	350730311	STEEL SHEET	1
	350730321	STEEL SHEET	2
	350730331	STEEL SHEET	2
	350730341	STEEL SHEET	1
	350730351	STEEL SHEET	1
	350730361	STEEL SHEET	1

NAME_ASSB	CODE_PART NO	NAME	QTY
STEEL SHEET ASSY	350730371	STEEL SHEET	1
	350730381	STEEL SHEET	1
	350730391	STEEL SHEET	1
	350730401	STEEL SHEET	1
	350730411	STEEL SHEET	1
	350730441	STEEL SHEET	1
	350730451	STEEL SHEET	1

NAME_ASSB	CODE_PART NO	NAME	QTY
STEEL SHEET - ASSY	350730461	STEEL SHEET	1
	350730471	STEEL SHEET	1
	350730481	STEEL SHEET	1
	350730491	STEEL SHEET	1
	350730501	STEEL SHEET	1
	350730511	STEEL SHEET	1
	350730521	STEEL SHEET	1

NAME_ASSB	CODE_PART NO	NAME	QTY
STEEL SHEET - ASSY			

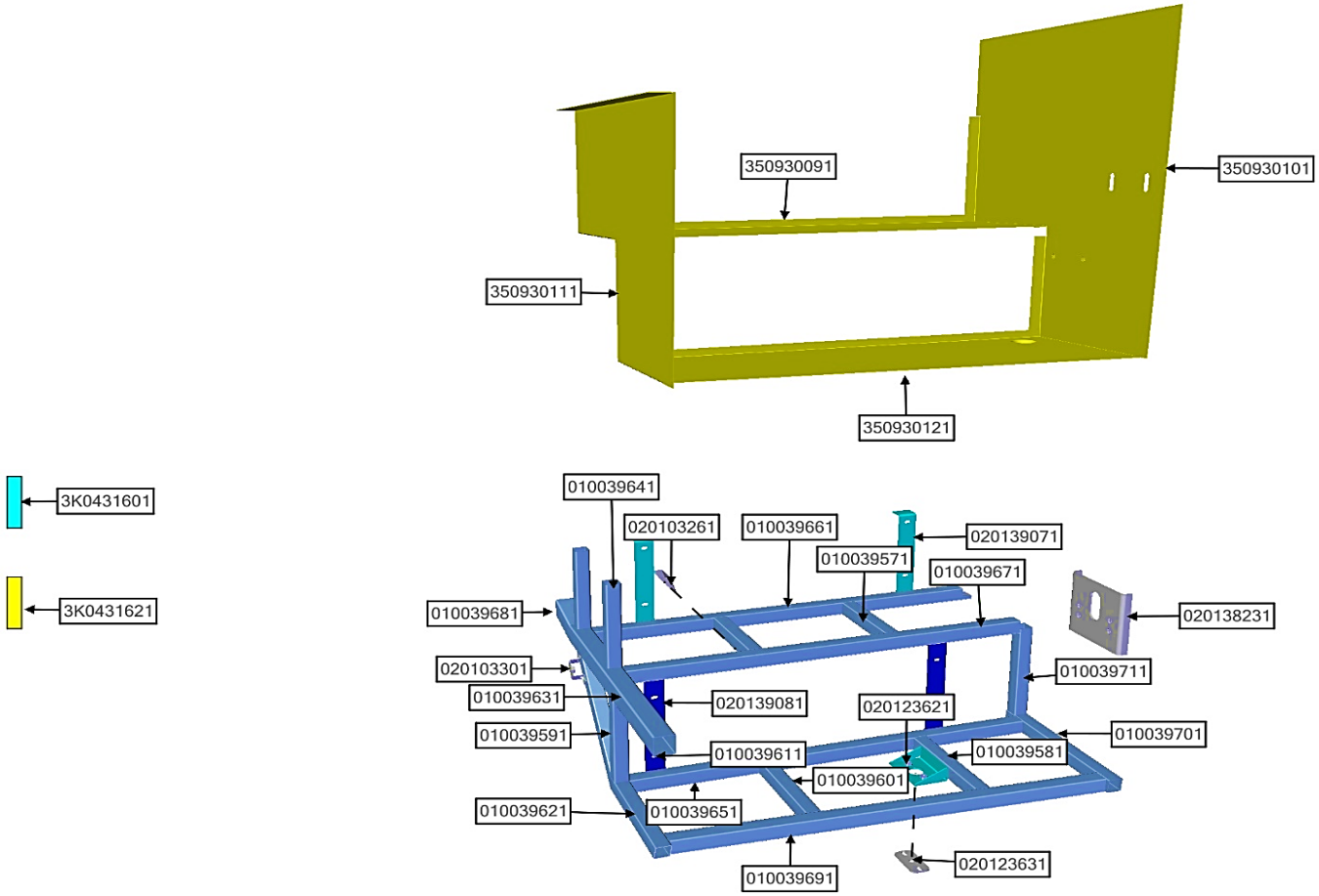

NAME_ASSB	CODE_PART NO	NAME	QTY
STAIRS FRAME - ASSY	3K0431601	STAIRS FRAME	1
	3K0431621	STEEL SHEET - ASSY	1
	010039571	SQUARE PIPE 01	2
	010039581	SQUARE PIPE 02	1
	010039591	SQUARE PIPE 03	1
	010039601	SQUARE PIPE 04	1
	010039611	SQUARE PIPE 05	1

NAME_ASSB	CODE_PART NO	NAME	QTY
STAIRS FRAME - ASSY	010039621	SQUARE PIPE 06	1
	010039631	STAIRS SQUARE PIPE 07	1
	010039641	SQUARE PIPE 08	2
	010039651	SQUARE PIPE 09	1
	010039661	SQUARE PIPE 10	1
	010039671	SQUARE PIPE 11	1
	010039681	SQUARE PIPE 12	1

NAME_ASSB	CODE_PART NO	NAME	QTY
STAIRS FRAME - ASSY	010039691	SQUARE PIPE 13	1
	010039701	SQUARE PIPE 14	1
	010039711	SQUARE PIPE 15	1
	020103261	BRACKET	1
	020103301	BRACKET	1
	020123621	BRACKET	1
	020123631	BRACKET	1

NAME_ASSB	CODE_PART NO	NAME	QTY
STAIRS FRAME - ASSY	020138231	BRACKET	1
	020139071	BRACKET	2
	020139081	BRACKET	2
	350930091	STEEL SHEET	1
	350930101	STEEL SHEET	1
	350930111	STEEL SHEET	1
	350930121	STEEL SHEET	1

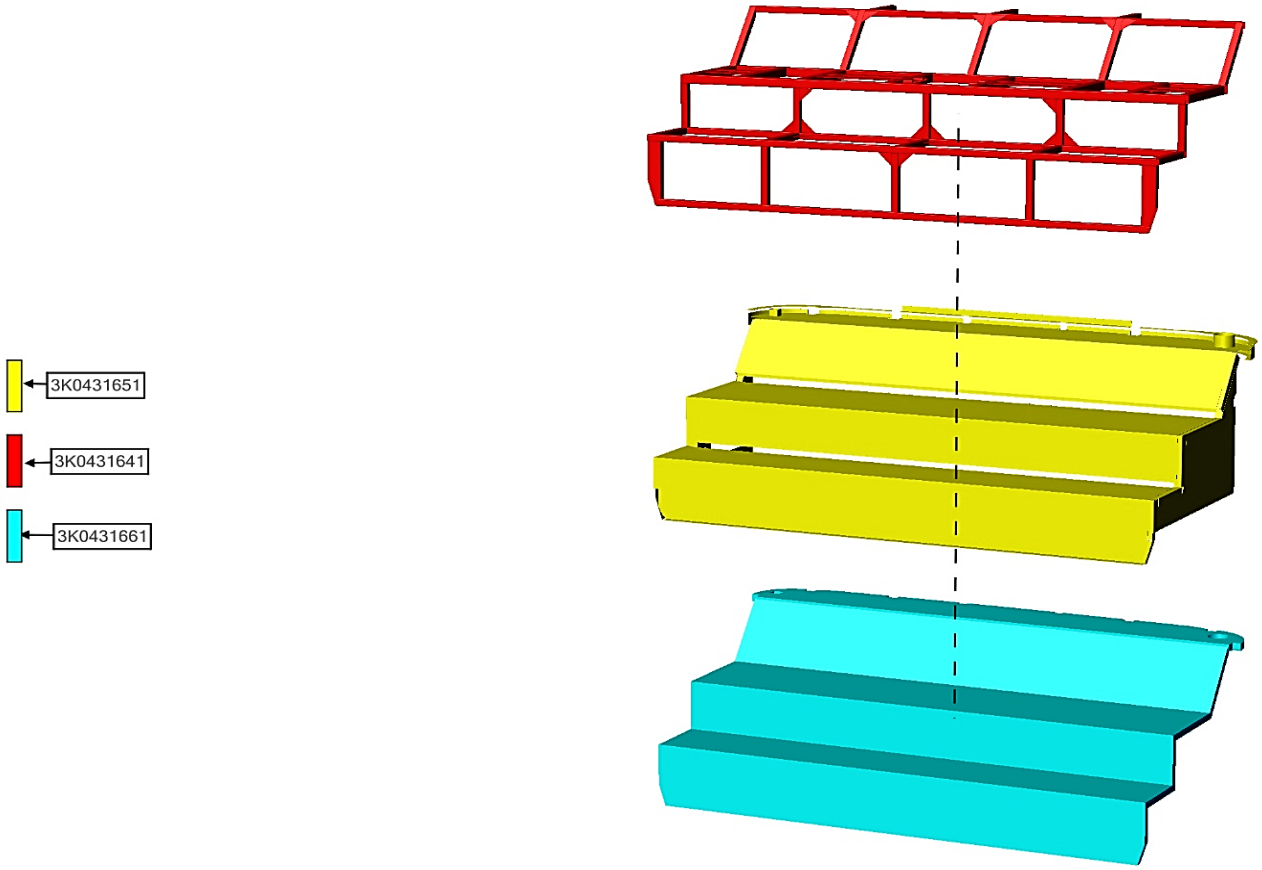

NAME_ASSB	CODE_PART NO	NAME	QTY
ENGINE FLOOR FRAME - ASSY	3K0431641	ENGINE FLOOR FRAME	1
	3K0431651	STEEL SHEET	1
	3K0431661	INSULATION	1

NAME_ASSB	CODE_PART NO	NAME	QTY
ENGINE FLOOR FRAME - ASSY			

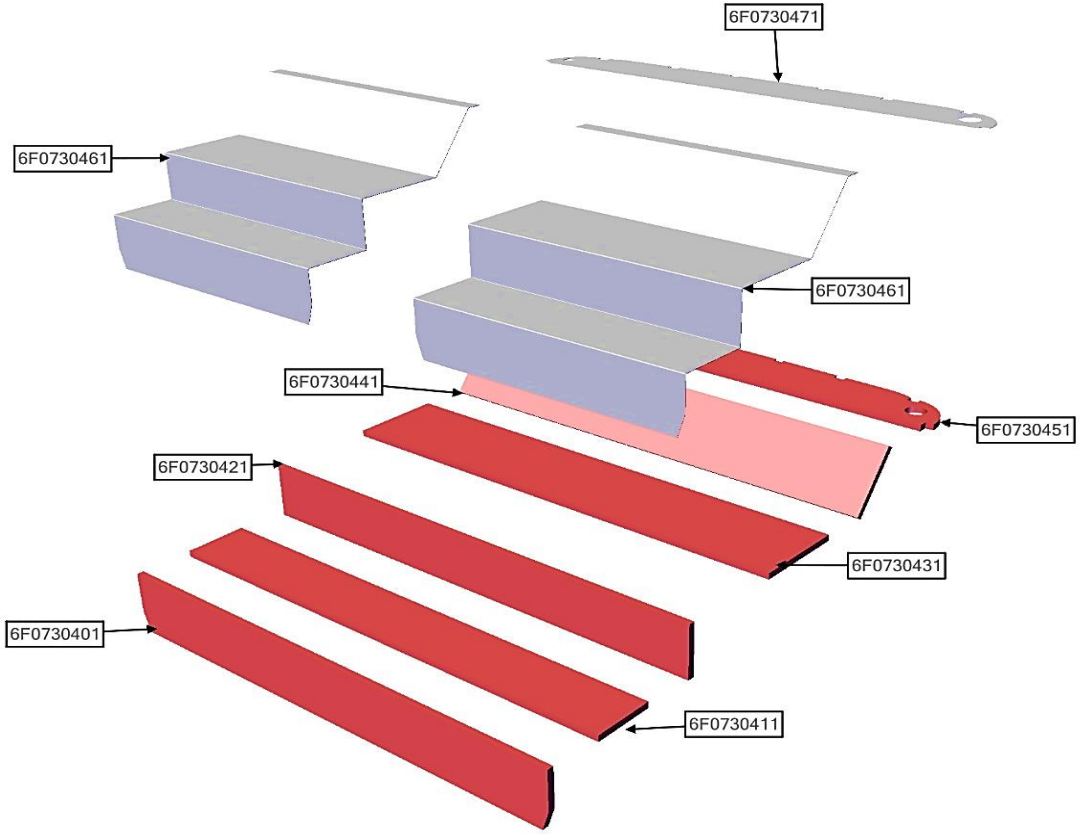

NAME_ASSB	CODE_PART NO	NAME	QTY
INSULATION	6F0730401	INSULATION	1
	6F0730411	INSULATION	1
	6F0730421	INSULATION	1
	6F0730431	INSULATION	1
	6F0730441	INSULATION	1
	6F0730451	INSULATION	1
	6F0730461	ALUMIUM GIRD	1

NAME_ASSB	CODE_PART NO	NAME	QTY
INSULATION	6F0730461	ALUMIUM GIRD	1
	6F0730471	ALUMIUM GIRD	1

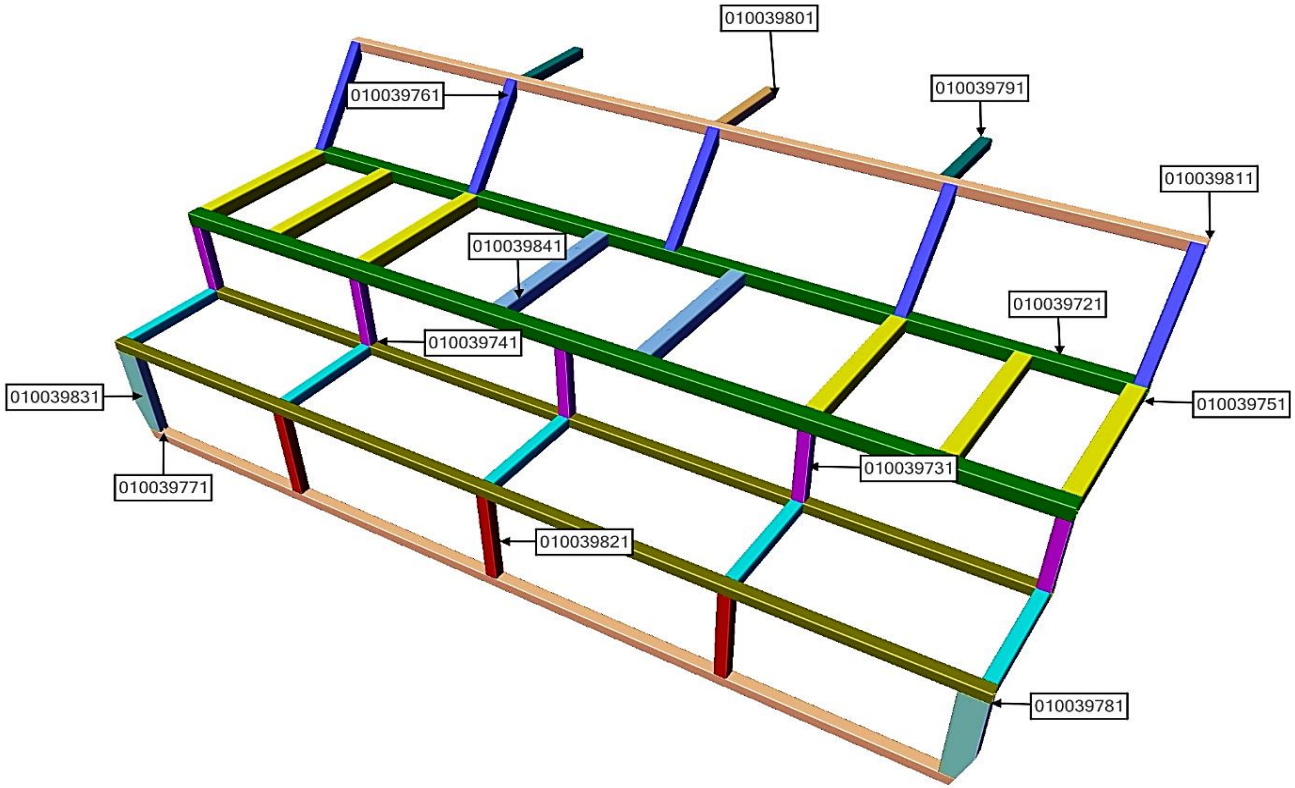

NAME_ASSB	CODE_PART NO	NAME	QTY
ENGINE FLOOR FRAME	010039811	SQUARE PIPE 10	1
	010039771	SQUARE PIPE 06	1
	010039801	SQUARE PIPE 09	1
	010039781	SQUARE PIPE 07	2
	010039791	SQUARE PIPE 08	2
	010039831	SQUARE PIPE 12	2
	010039841	SQUARE PIPE 13	2

NAME_ASSB	CODE_PART NO	NAME	QTY
ENGINE FLOOR FRAME	010039751	SQUARE PIPE 04	2
	010039821	SQUARE PIPE 11	3
	010039741	SQUARE PIPE 03	5
	010039731	SQUARE PIPE 02	5
	010039761	SQUARE PIPE 05	5
	010039721	SQUARE PIPE 01	6

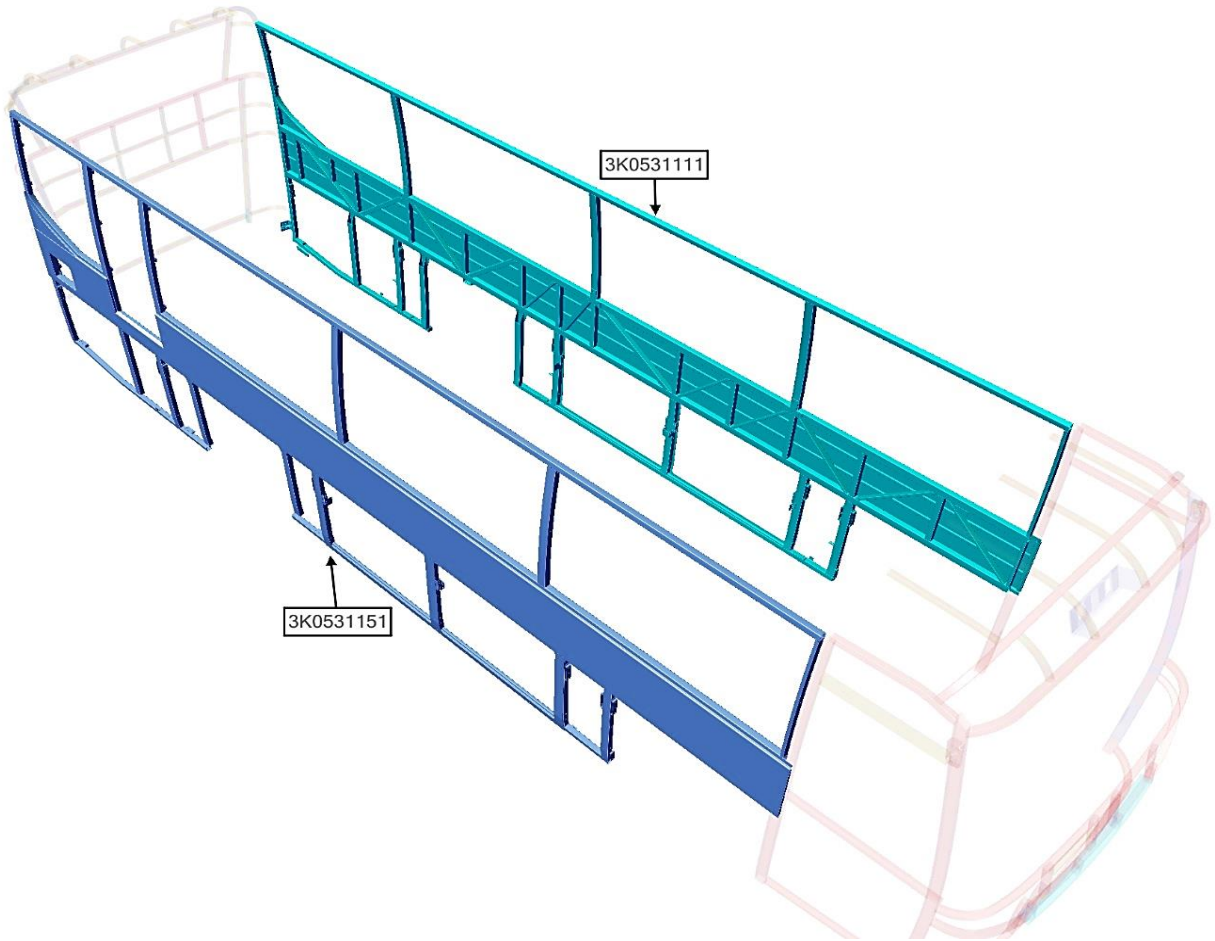

NAME_ASSB	CODE_PART NO	NAME	QTY
SIDE FRAME - ASSY	3K0531111	LH SIDE FRAME - ASSY	1
	3K0531151	RH SIDE FRAME - ASSY	1

NAME_ASSB	CODE_PART NO	NAME	QTY
SIDE FRAME - ASSY			

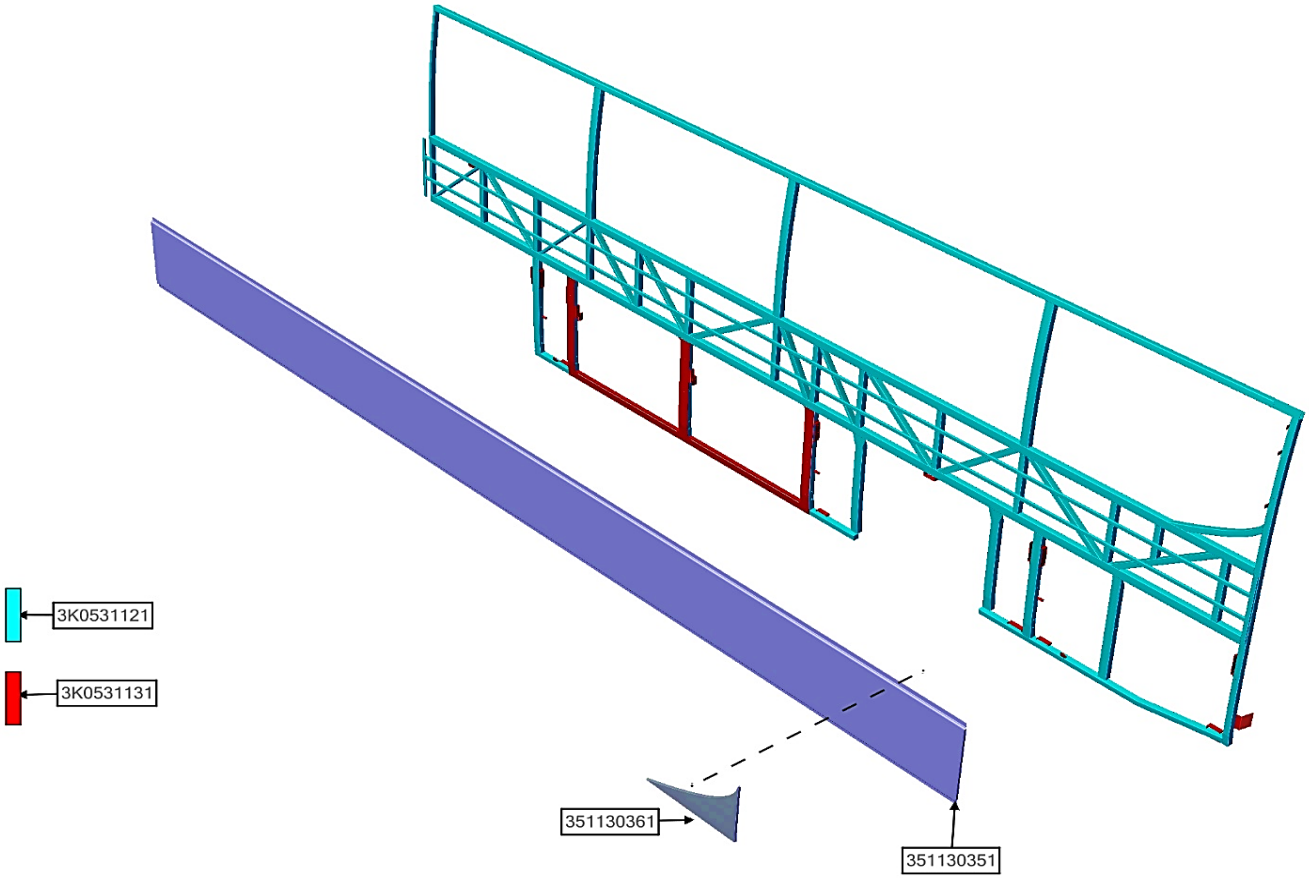

NAME_ASSB	CODE_PART NO	NAME	QTY
LH SIDE FRAME - ASSY	3K0531121	RH SIDE FRAME	1
	3K0531131	CONNECTING ITEM	1
	351130351	STEEL SHEET	1
	351130361	STEEL SHEET	1

NAME_ASSB	CODE_PART NO	NAME	QTY
LH SIDE FRAME - ASSY			

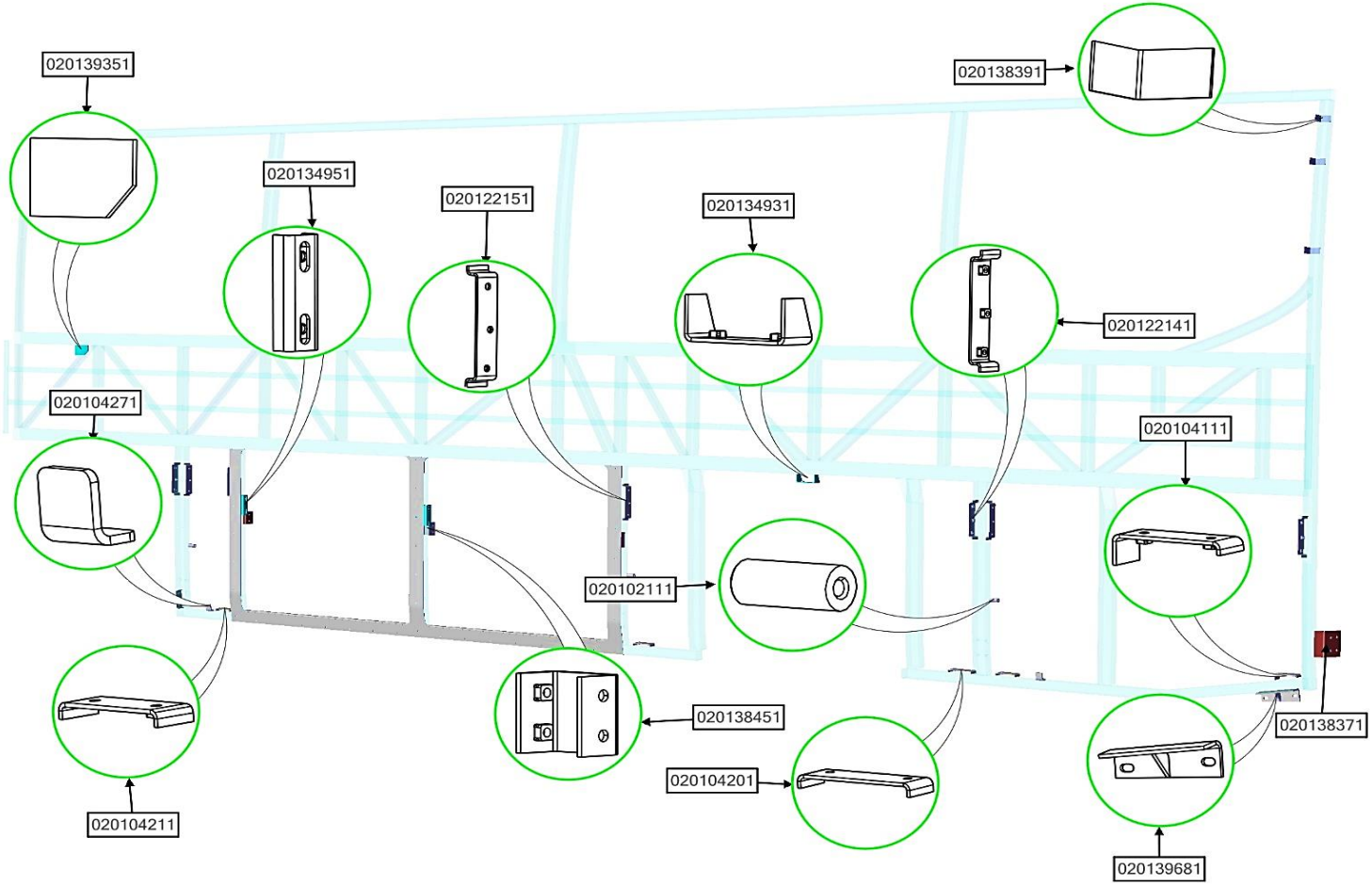

NAME_ASSB	CODE_PART NO	NAME	QTY
CONNECTING ITEM	020102111	BRACKET	1
	020104111	STOPPER BRACKET	1
	020104201	BRACKET	1
	020104211	BRACKET	1
	020104271	BRACKET	1
	020122141	MOUNTING	1
	020122151	MOUNTING	1

NAME_ASSB	CODE_PART NO	NAME	QTY
CONNECTING ITEM	020134931	BRACKET	1
	020134951	BRACKET	1
	020138371	BRACKET	1
	020138391	BRACKET	1
	020138451	BRACKET	1
	020139351	BRACKET	1
	020139681	BRACKET	1

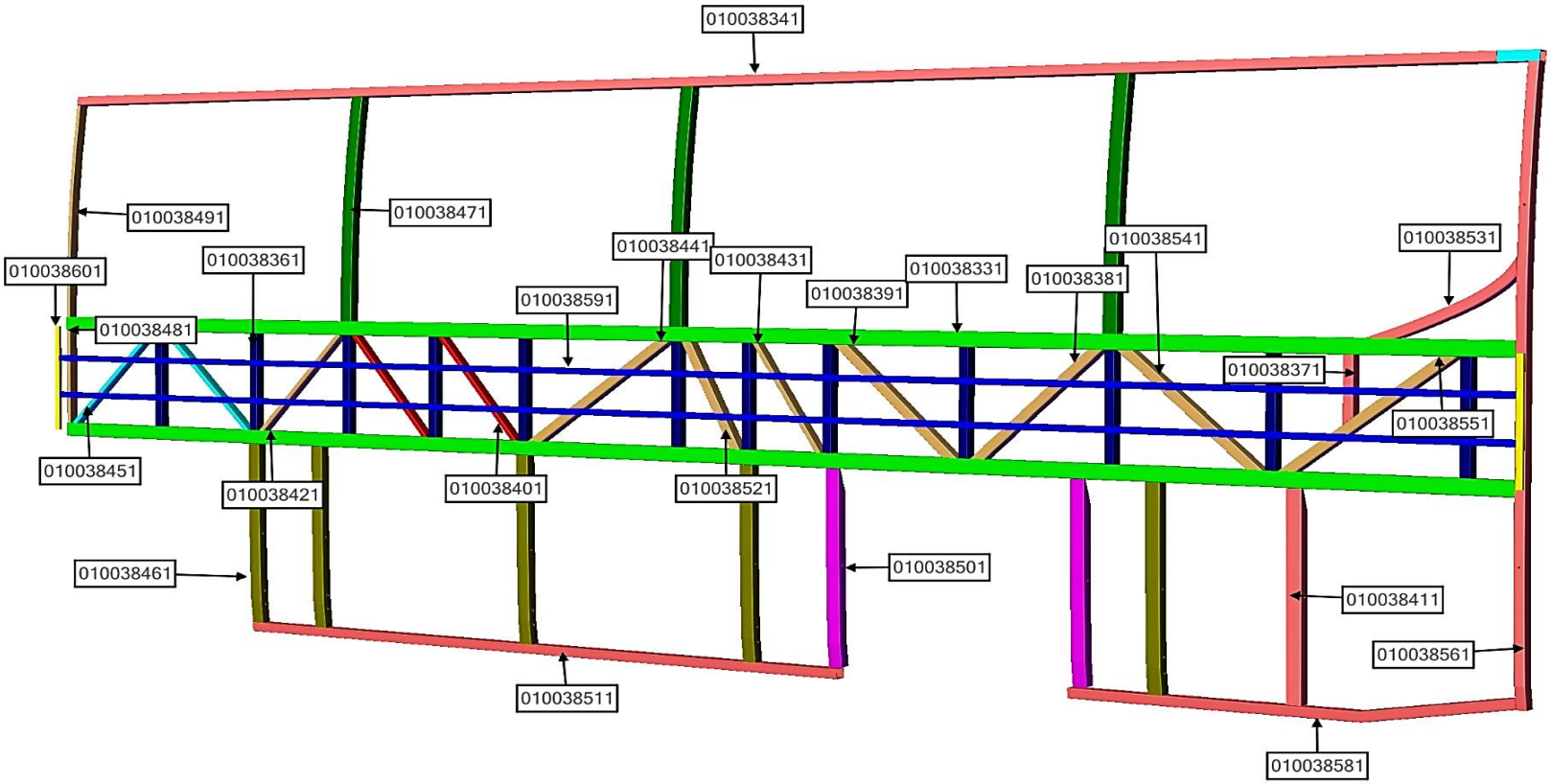

NAME_ASSB	CODE_PART NO	NAME	QTY
RH SIDE FRAME	010038331	SQUARE PIPE 01	2
	010038341	SQUARE PIPE 02	1
	010038361	SQUARE PIPE 03	12
	010038371	SQUARE PIPE 04	1
	010038381	SQUARE PIPE 05	1
	010038391	SQUARE PIPE 06	1
	010038401	SQUARE PIPE 07	2

NAME_ASSB	CODE_PART NO	NAME	QTY
RH SIDE FRAME	010038411	SQUARE PIPE 08	1
	010038421	SQUARE PIPE 09	1
	010038431	SQUARE PIPE 10	1
	010038441	SQUARE PIPE 11	1
	010038451	SQUARE PIPE 12	2
	010038461	SQUARE PIPE 13	5
	010038471	SQUARE PIPE 14	3

NAME_ASSB	CODE_PART NO	NAME	QTY
	010038481	SQUARE PIPE 15	1
	010038491	SQUARE PIPE 16	1
	010038501	SQUARE PIPE 17	2
	010038511	SQUARE PIPE 18	1
	010038521	SQUARE PIPE 19	1
	010038531	SQUARE PIPE 20	1
	010038541	SQUARE PIPE 21	1
RH SIDE FRAME			

NAME_ASSB	CODE_PART NO	NAME	QTY
	010038551	SQUARE PIPE 22	1
	010038561	SQUARE PIPE 23	1
	010038581	SQUARE PIPE 24	1
	010038591	SQUARE PIPE 01	2
	010038601	SQUARE PIPE 02	2
RH SIDE FRAME			

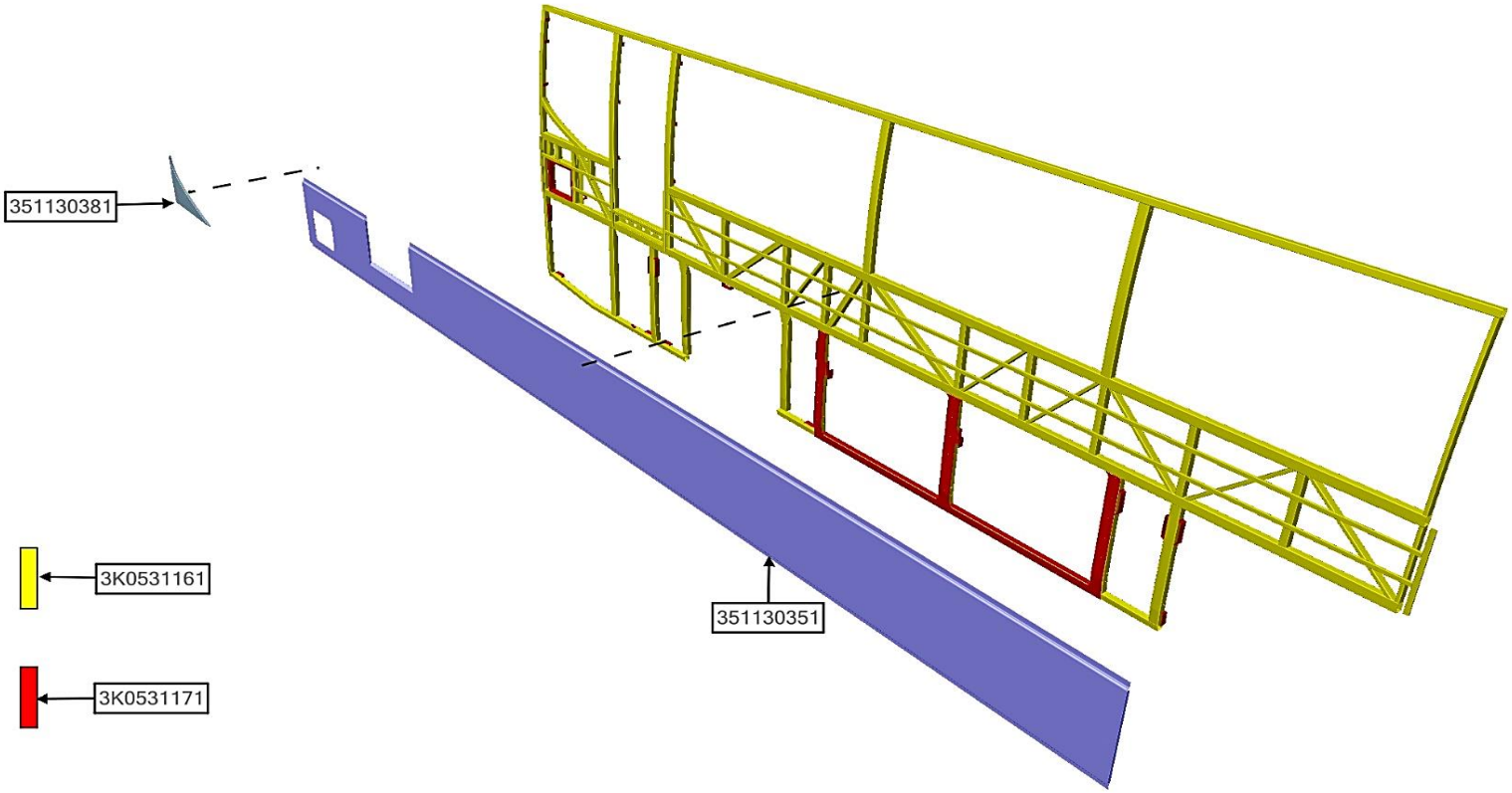

NAME_ASSB	CODE_PART NO	NAME	QTY
RH SIDE FRAME - ASSY	3K0531161	BODY SIDE RH	1
	3K0531171	CONNECTING ITEM	1
	351130351	RH SIDE STEEL SHEET - ASSY	1
	351130381	STEEL SHEET	1

NAME_ASSB	CODE_PART NO	NAME	QTY
RH SIDE FRAME - ASSY			

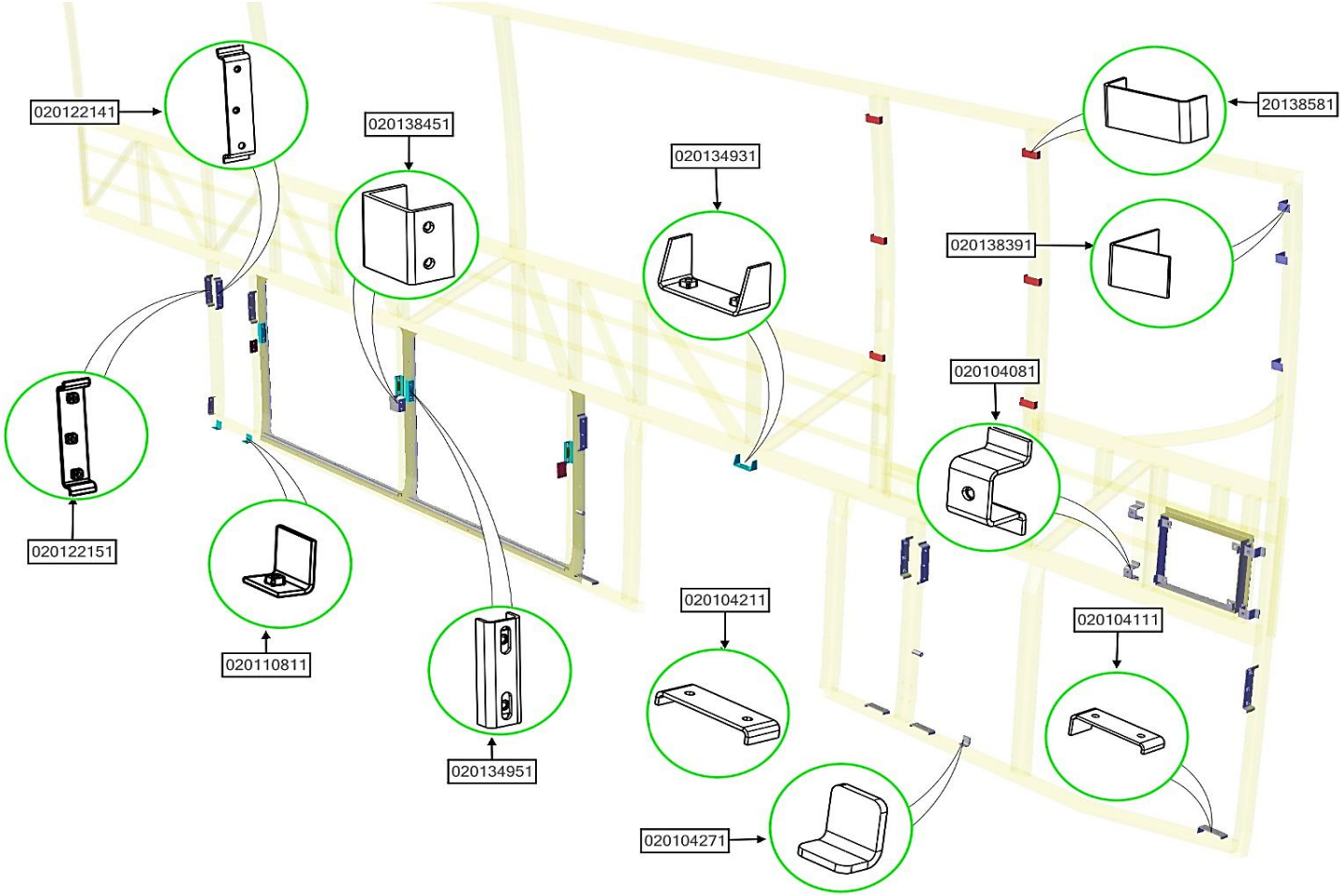

NAME_ASSB	CODE_PART NO	NAME	QTY
CONNECTING ITEM	020104081	BRACKET	1
	020104111	STOPPER BRACKET	1
	020104211	BRACKET	1
	020104271	BRACKET	1
	020110811	BRACKET	1
	020122141	MOUNTING	1
	020122151	MOUNTING	1

NAME_ASSB	CODE_PART NO	NAME	QTY
CONNECTING ITEM	020134931	BRACKET	1
	020134951	BRACKET	1
	020138391	BRACKET	1
	020138451	BRACKET	1
	020138581	BRACKET	1

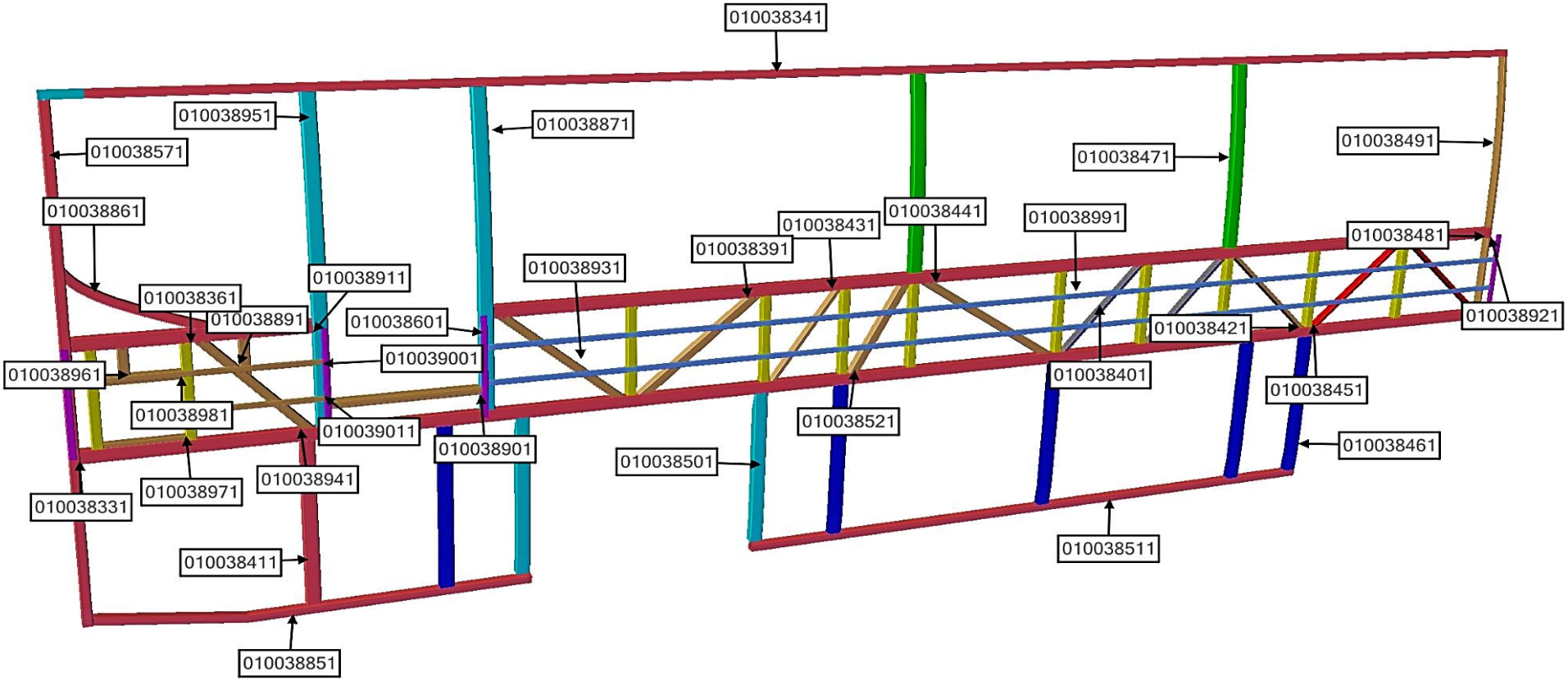

NAME_ASSB	CODE_PART NO	NAME	QTY
BODY SIDE RH	010038331	SQUARE PIPE 01	1
	010038341	SQUARE PIPE 02	1
	010038361	SQUARE PIPE 03	11
	010038391	SQUARE PIPE 06	1
	010038401	SQUARE PIPE 07	2
	010038411	SQUARE PIPE 08	1
	010038421	SQUARE PIPE 09	1

NAME_ASSB	CODE_PART NO	NAME	QTY
BODY SIDE RH	010038431	SQUARE PIPE 10	1
	010038441	SQUARE PIPE 11	1
	010038451	SQUARE PIPE 12	2
	010038461	SQUARE PIPE 13	5
	010038471	SQUARE PIPE 14	2
	010038481	SQUARE PIPE 15	1
	010038491	SQUARE PIPE 16	1

NAME_ASSB	CODE_PART NO	NAME	QTY
BODY SIDE RH	010038501	SQUARE PIPE 17	2
	010038511	SQUARE PIPE 18	1
	010038521	SQUARE PIPE 19	1
	010038571	SQUARE PIPE 23	1
	010038601	SQUARE PIPE 02	4
	010038851	SQUARE PIPE 25	1
	010038861	SQUARE PIPE 26	1
	010038871	SQUARE PIPE 27	1
	010038891	SQUARE PIPE 28	1
	010038901	SQUARE PIPE 29	1
	010038911	SQUARE PIPE 30	1

NAME_ASSB	CODE_PART NO	NAME	QTY
BODY SIDE RH	010038921	SQUARE PIPE 31	1
	010038931	SQUARE PIPE 32	1
	010038941	SQUARE PIPE 33	1
	010038951	SQUARE PIPE 34	1
	010038961	SQUARE PIPE 35	1
	010038971	SQUARE PIPE 36	1
	010038981	SQUARE PIPE 37	1
	010038991	SQUARE PIPE 37	2
	010039001	SQUARE PIPE 37	1
	010039011	SQUARE PIPE 37	1

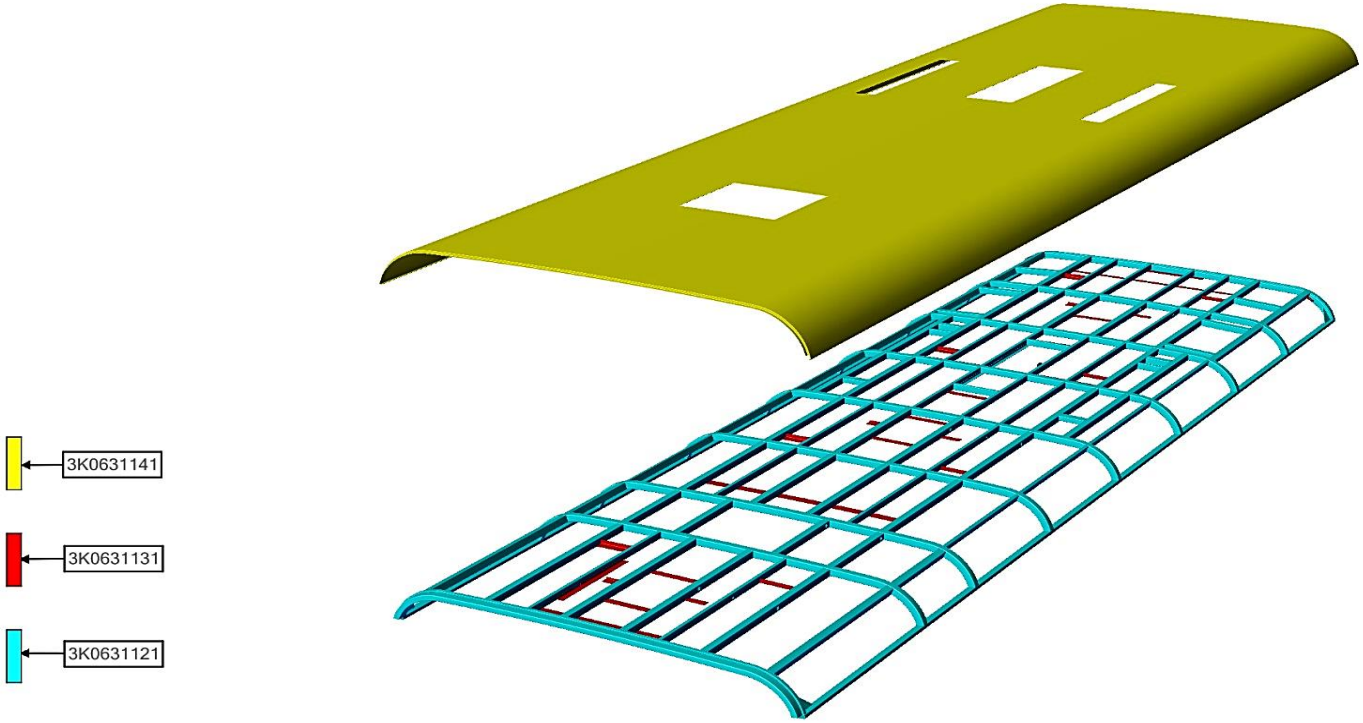

NAME_ASSB	CODE_PART NO	NAME	QTY
ROOF FRAME - ASSY	3K0631121	ROOF FRAME	1
	3K0631131	CONNECTING ITEM	1
	3K0631141	ROOF STEEL SHEET - ASSY	1

NAME_ASSB	CODE_PART NO	NAME	QTY
ROOF FRAME - ASSY			

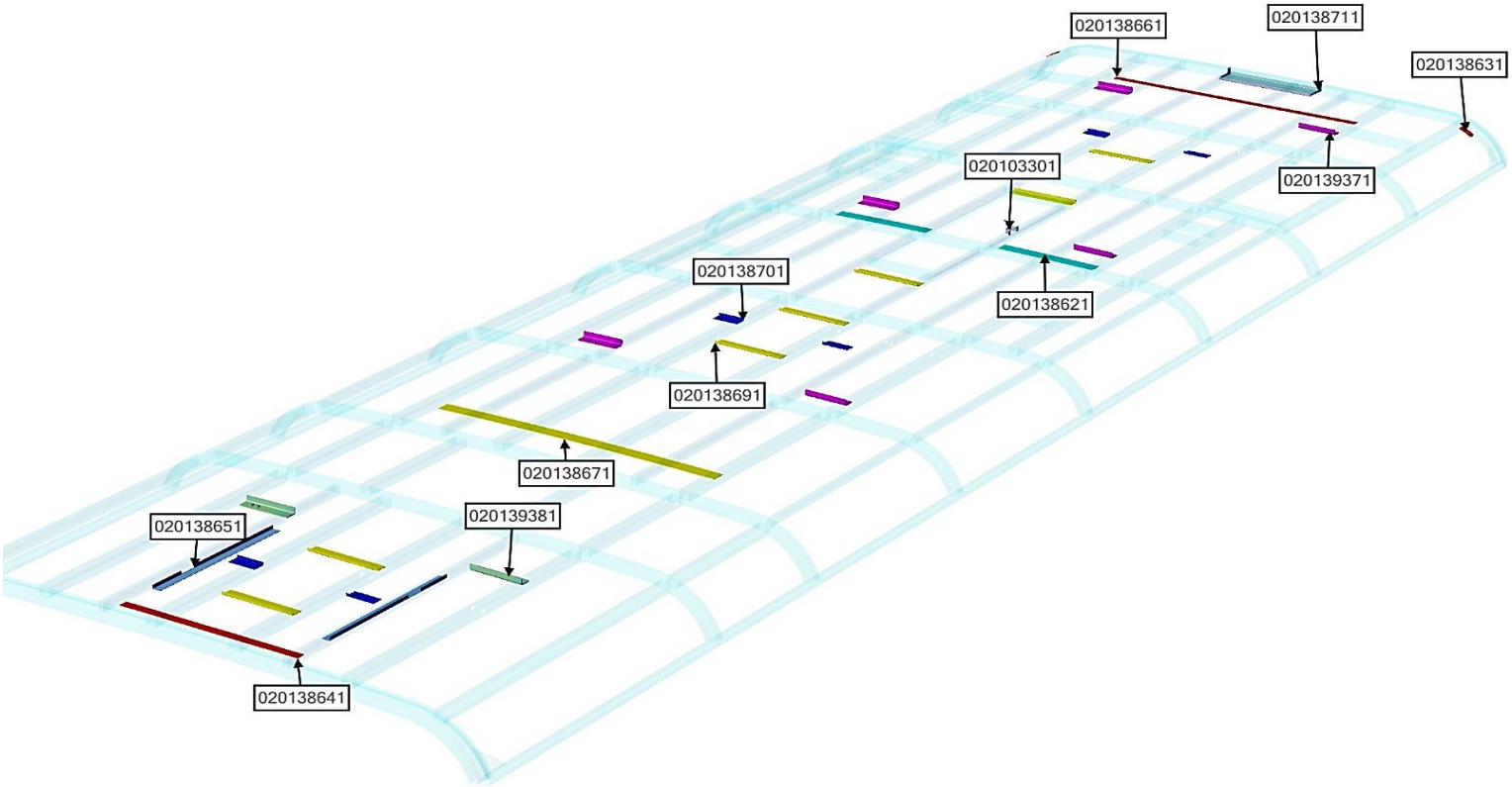

NAME_ASSB	CODE_PART NO	NAME	QTY
CONNECTING ITEM	020103301	BRACKET	1
	020138621	BRACKET	2
	020138631	BRACKET	2
	020138641	BRACKET	1
	020138651	BRACKET	2
	020138661	BRACKET	1
	020138671	BRACKET	1

NAME_ASSB	CODE_PART NO	NAME	QTY
CONNECTING ITEM	020138691	BRACKET	7
	020138701	BRACKET	6
	020138711	BRACKET	1
	020139371	BRACKET	6
	020139381	BRACKET	2

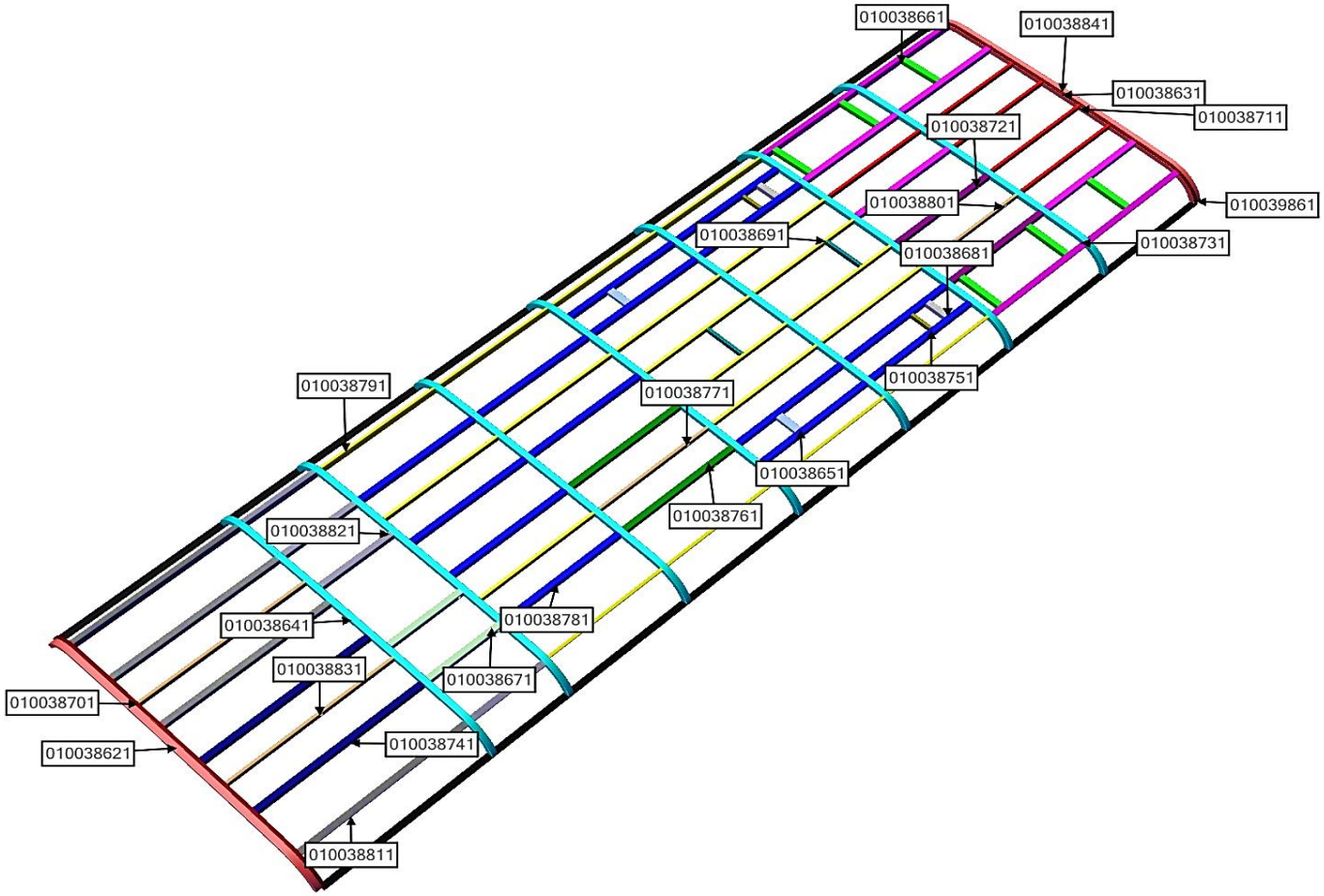

NAME_ASSB	CODE_PART NO	NAME	QTY
ROOF FRAME	010038621	SQUARE PIPE 02	1
	010038631	SQUARE PIPE 03	1
	010038641	SQUARE PIPE 04	7
	010038651	SQUARE PIPE 05	2
	010038661	SQUARE PIPE 06	6
	010038671	SQUARE PIPE 07	2
	010038681	SQUARE PIPE 08	2

NAME_ASSB	CODE_PART NO	NAME	QTY
ROOF FRAME	010038691	SQUARE PIPE 09	2
	010038701	SQUARE PIPE 10	1
	010038711	SQUARE PIPE 11	5
	010038721	SQUARE PIPE 12	2
	010038731	SQUARE PIPE 13	8
	010038741	SQUARE PIPE 14	2
	010038751	SQUARE PIPE 15	2

NAME_ASSB	CODE_PART NO	NAME	QTY
ROOF FRAME	010038761	SQUARE PIPE 16	2
	010038771	SQUARE PIPE 17	1
	010038781	SQUARE PIPE 18	14
	010038791	SQUARE PIPE 19	19
	010038801	SQUARE PIPE 20	1
	010038811	SQUARE PIPE 21	4
	010038821	SQUARE PIPE 22	4
	010038831	SQUARE PIPE 23	1
	010038841	SQUARE PIPE 24	2
	010039861	SQUARE PIPE 01	2

NAME_ASSB	CODE_PART NO	NAME	QTY
ROOF FRAME			

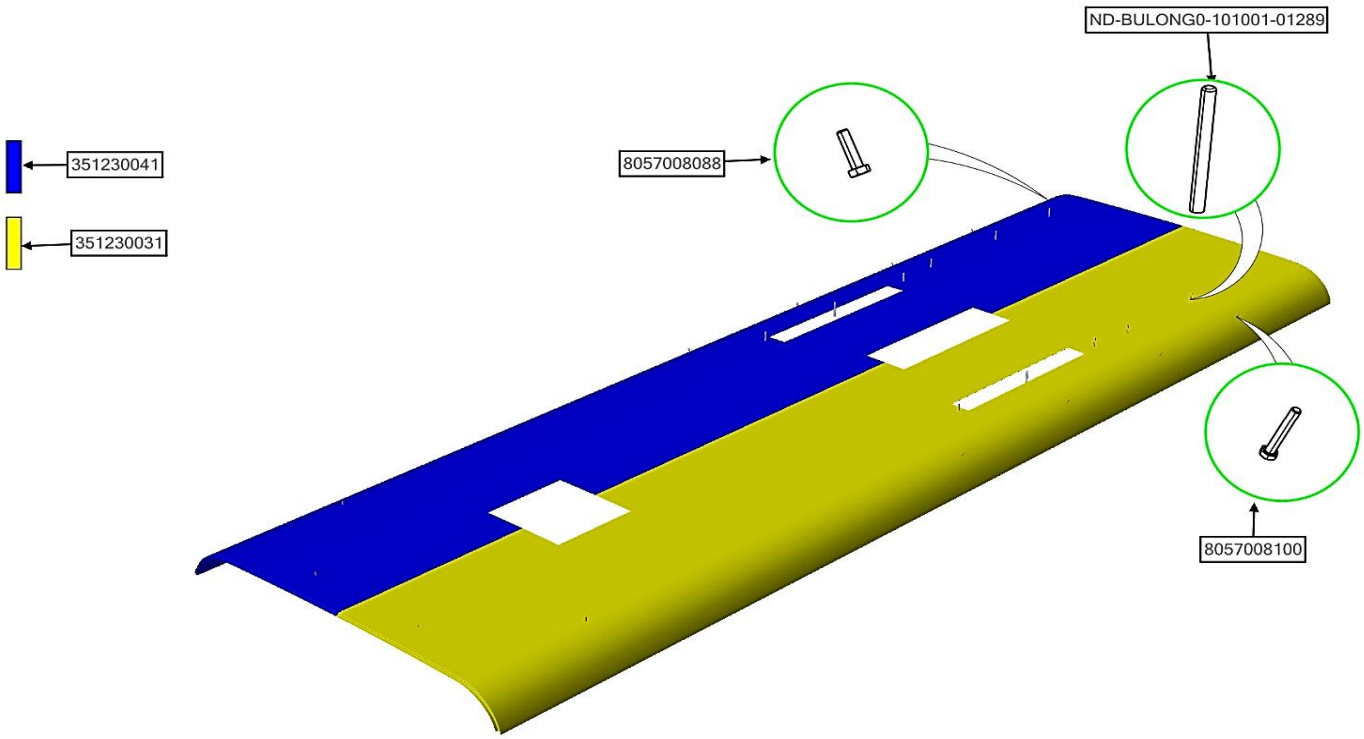

NAME_ASSB	CODE_PART NO	NAME	QTY
ROOF STEEL SHEET - ASSY	351230031	STEEL SHEET	1
	351230041	STEEL SHEET	1
	8057008088	BOLT 08030125	2
	8057008100	BOLT 08050125	12
	ND-BULONG0-101001-01289	BOLT 10100150	12

NAME_ASSB	CODE_PART NO	NAME	QTY
ROOF STEEL SHEET - ASSY			

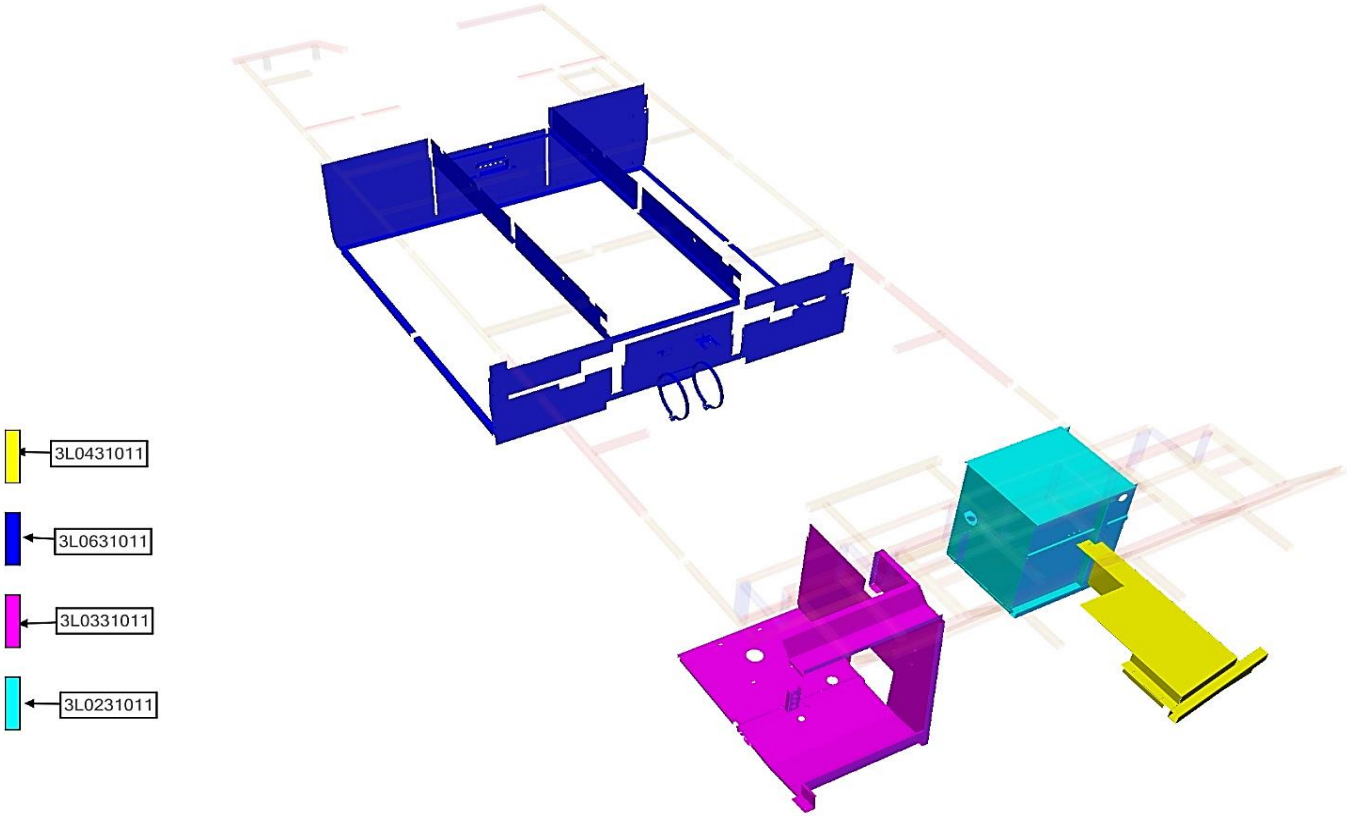

NAME_ASSB	CODE_PART NO	NAME	QTY
STEEL SHEET ASSY	3L0231011	STEEL SHEET	1
	3L0331011	STEEL SHEET - ASSY	1
	3L0431011	SCR TANK COVER - ASSY	1
	3L0631011	STEEL SHEET - ASSY	1

NAME_ASSB	CODE_PART NO	NAME	QTY
STEEL SHEET ASSY			

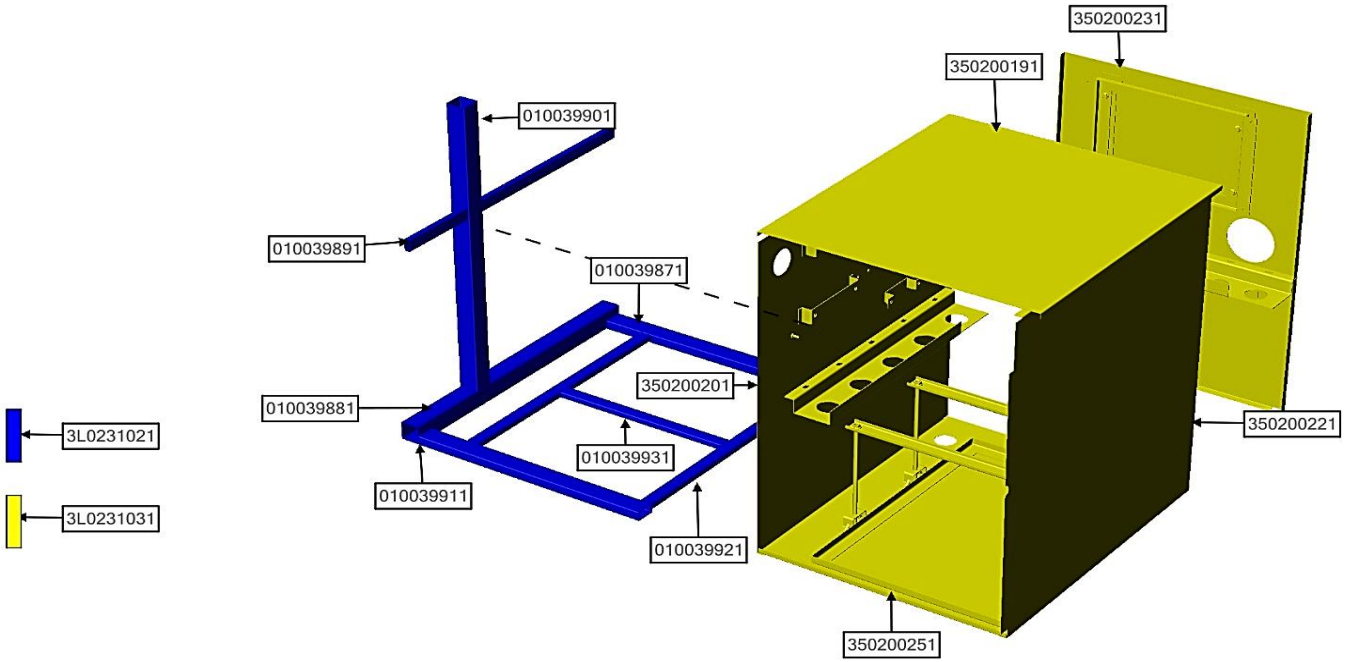

NAME_ASSB	CODE_PART NO	NAME	QTY
STEEL SHEET	3L0231021	ELECTRIC FRAME - ASSY	1
	010039901	SQUARE PIPE 01	1
	010039881	SQUARE PIPE 01	1
	350200201	STEEL SHEET	1
	350200221	STEEL SHEET	1
	350200231	STEEL SHEET	1
	3L0231031	STEEL SHEET	1

NAME_ASSB	CODE_PART NO	NAME	QTY
STEEL SHEET	350200191	STEEL SHEET	1
	010039891	SQUARE PIPE 01	1
	350200251	ELECTRICAL CABINET STEEL SHEET - ASSY 01	1
	010039931	SQUARE PIPE 01	1
	010039871	SQUARE PIPE 01	1
	010039921	SQUARE PIPE 01	2
	010039911	SQUARE PIPE 01	2

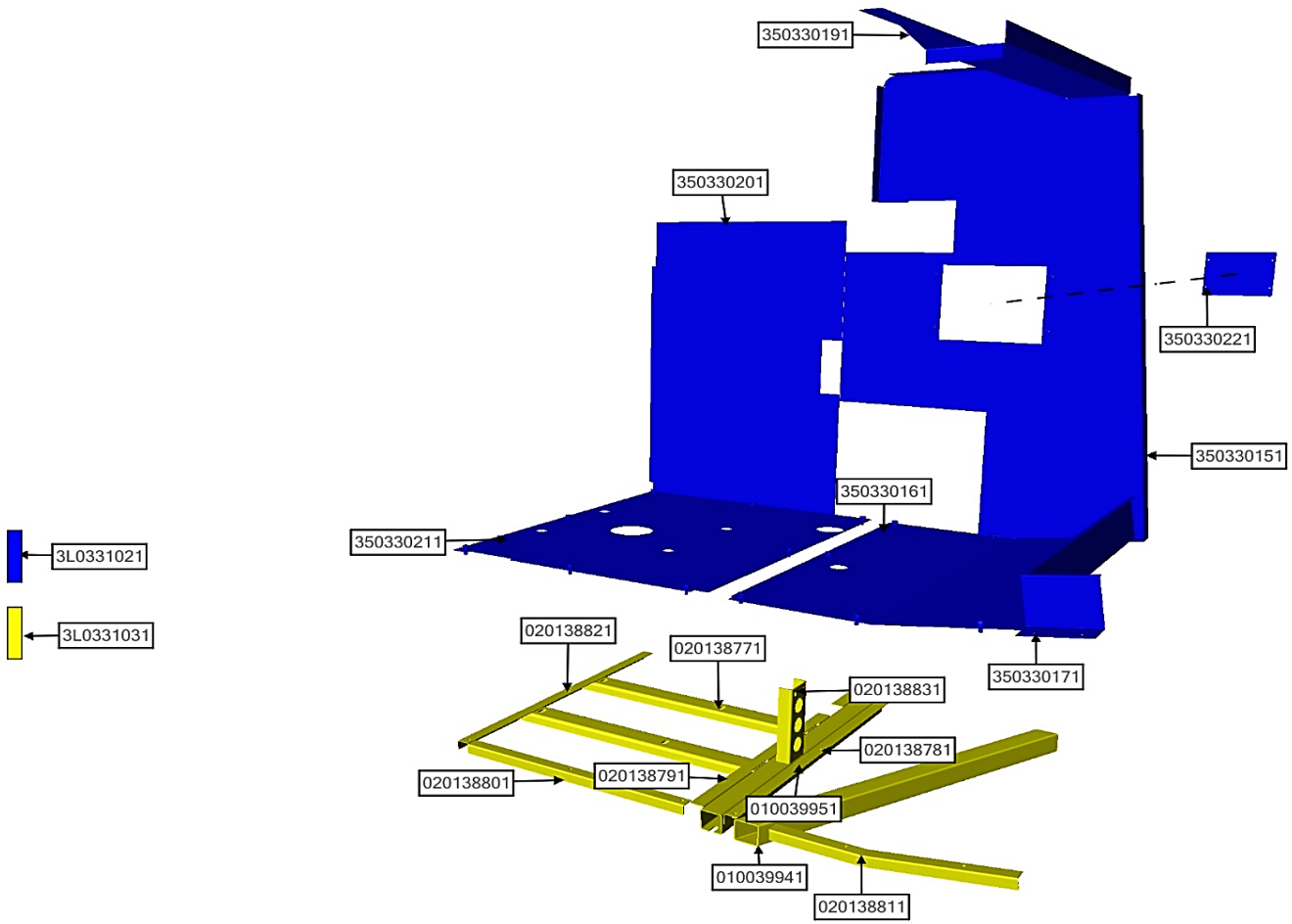

NAME_ASSB	CODE_PART NO	NAME	QTY
STEEL SHEET - ASSY	010039941	SQUARE PIPE 01	1
	010039951	SQUARE PIPE 01	1
	350330211	STEEL SHEET	1
	020138831	BRACKET	1
	350330191	STEEL SHEET	1
	350330221	ENGINE CHECKING HATCHES	1
	020138781	BRACKET	1

NAME_ASSB	CODE_PART NO	NAME	QTY
STEEL SHEET - ASSY	020138791	BRACKET	1
	020138801	BRACKET	1
	020138811	BRACKET	1
	3L0331021	STEEL SHEET - ASSY	1
	020138821	BRACKET	1
	350330151	STEEL SHEET	1
	350330201	STEEL SHEET	1

NAME_ASSB	CODE_PART NO	NAME	QTY
STEEL SHEET - ASSY	3L0331031	SQUARE PIPE 01	1
	350330161	STEEL SHEET	1
	350330171	STEEL SHEET	1
	020138771	BRACKET	2

NAME_ASSB	CODE_PART NO	NAME	QTY
STEEL SHEET - ASSY			

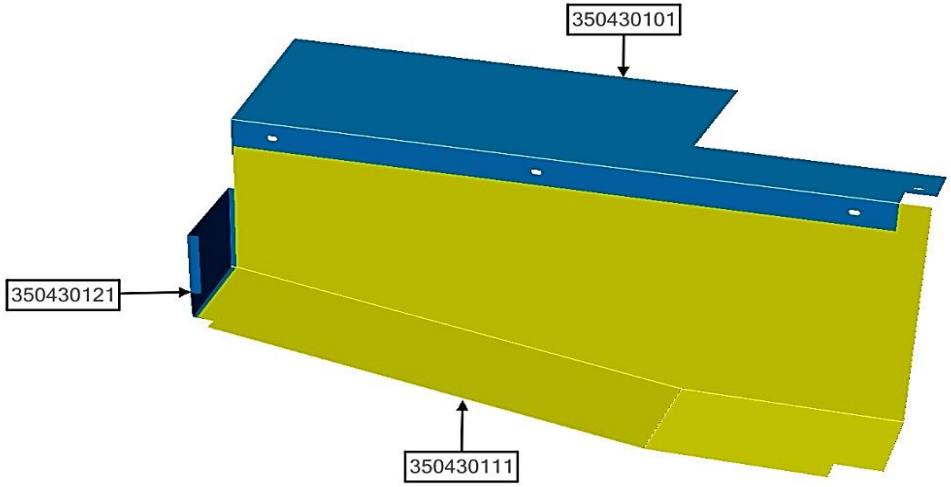

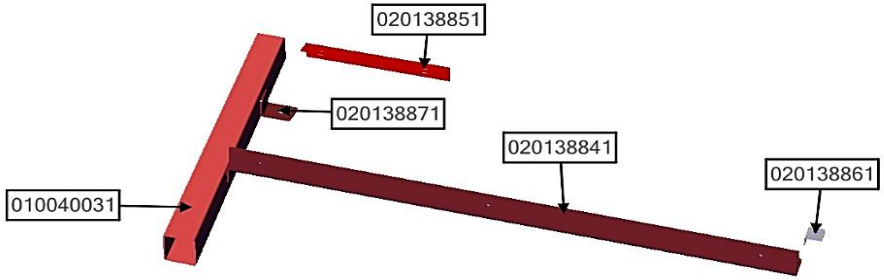

NAME_ASSB	CODE_PART NO	NAME	QTY
SCR TANK COVER - ASSY	010040031	SCR TANK FRAME	1
	020138871	BRACKET	1
	350430101	STEEL SHEET	1
	350430111	STEEL SHEET	1
	350430121	STEEL SHEET	1
	020138851	BRACKET	1
	020138861	BRACKET	1

NAME_ASSB	CODE_PART NO	NAME	QTY
SCR TANK COVER - ASSY	020138841	BRACKET	1

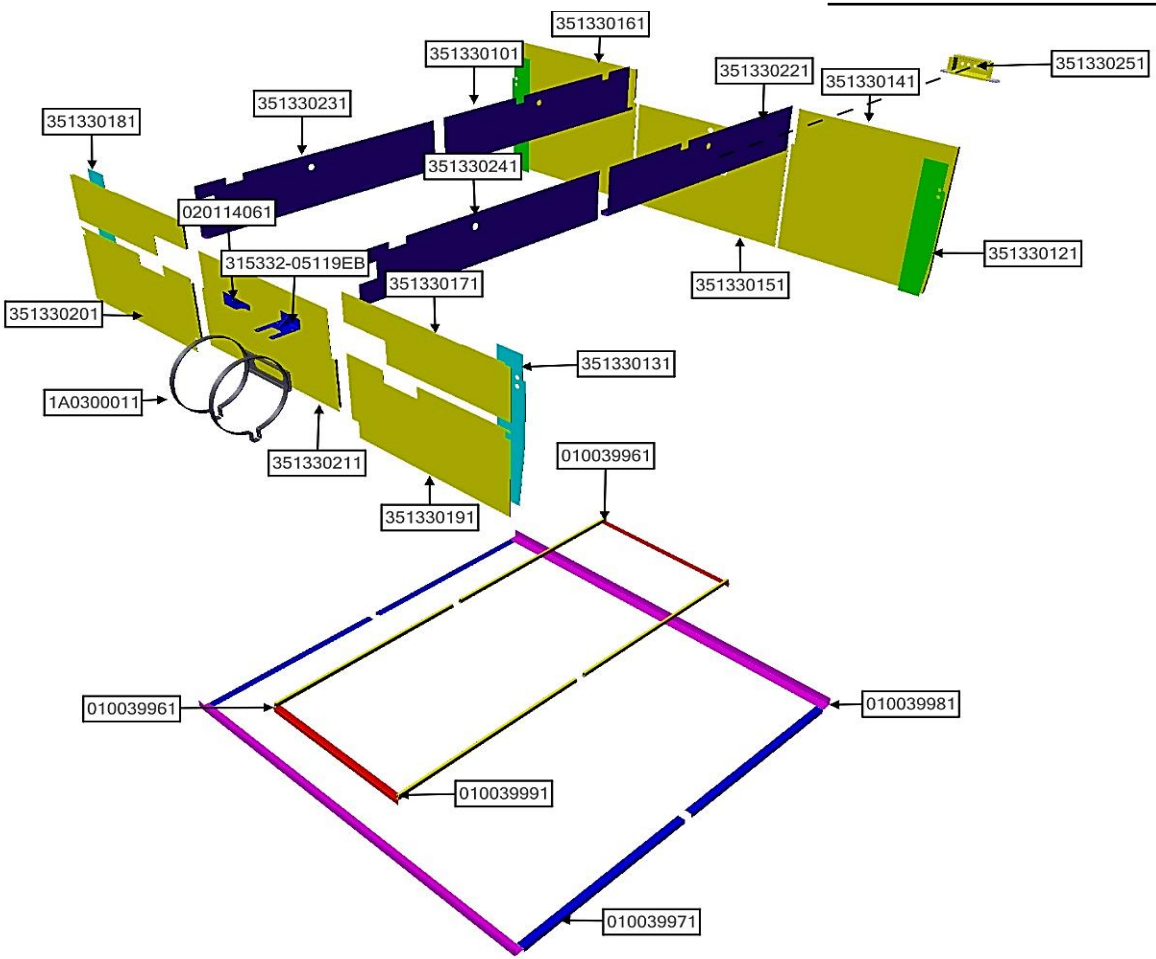

NAME_ASSB	CODE_PART NO	NAME	QTY
STEEL SHEET ASSY	351330201	STEEL SHEET	1
	351330141	STEEL SHEET	1
	351330151	STEEL SHEET	1
	351330161	STEEL SHEET	1
	351330181	STEEL SHEET	1
	351330221	STEEL SHEET	1
	351330231	STEEL SHEET	1

NAME_ASSB	CODE_PART NO	NAME	QTY
STEEL SHEET ASSY	351330101	STEEL SHEET	1
	315332-05119EB	BRACKET	1
	351330251	GRID PLATE	1
	351330211	STEEL SHEET	1
	1A0300011	BELT TANK	1
	020114061	BRACKET	1
	351330191	STEEL SHEET	1

NAME_ASSB	CODE_PART NO	NAME	QTY
STEEL SHEET - ASSY	351330171	STEEL SHEET	1
	351330241	STEEL SHEET	1
	010039961	LUGGAGE COMPARTMENTS SQUARE PIPE	1
	010039961	LUGGAGE COMPARTMENTS SQUARE PIPE	1
	351330121	STEEL SHEET	2
	351330131	STEEL SHEET	2
	010039981	LUGGAGE COMPARTMENTS SQUARE PIPE	2
	010039991	LUGGAGE COMPARTMENTS SQUARE PIPE	4
	010039971	LUGGAGE COMPARTMENTS SQUARE PIPE	4

NAME_ASSB	CODE_PART NO	NAME	QTY
STEEL SHEET - ASSY			

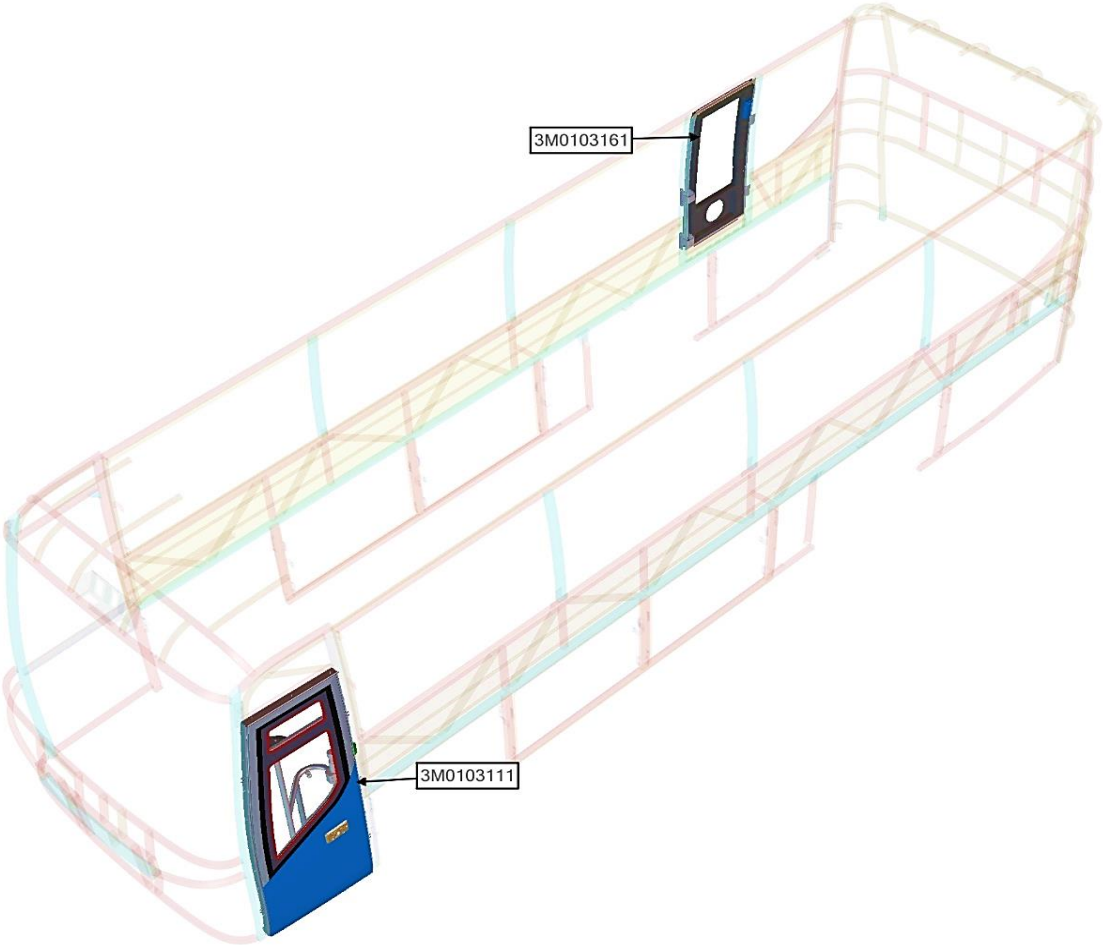

NAME_ASSB	CODE_PART NO	NAME	QTY
DOOR - ASSY	3M0103111	PASSENGER DOOR - ASSY	1
	3M0103161	EMERGENCY DOOR	1

NAME_ASSB	CODE_PART NO	NAME	QTY
DOOR - ASSY			

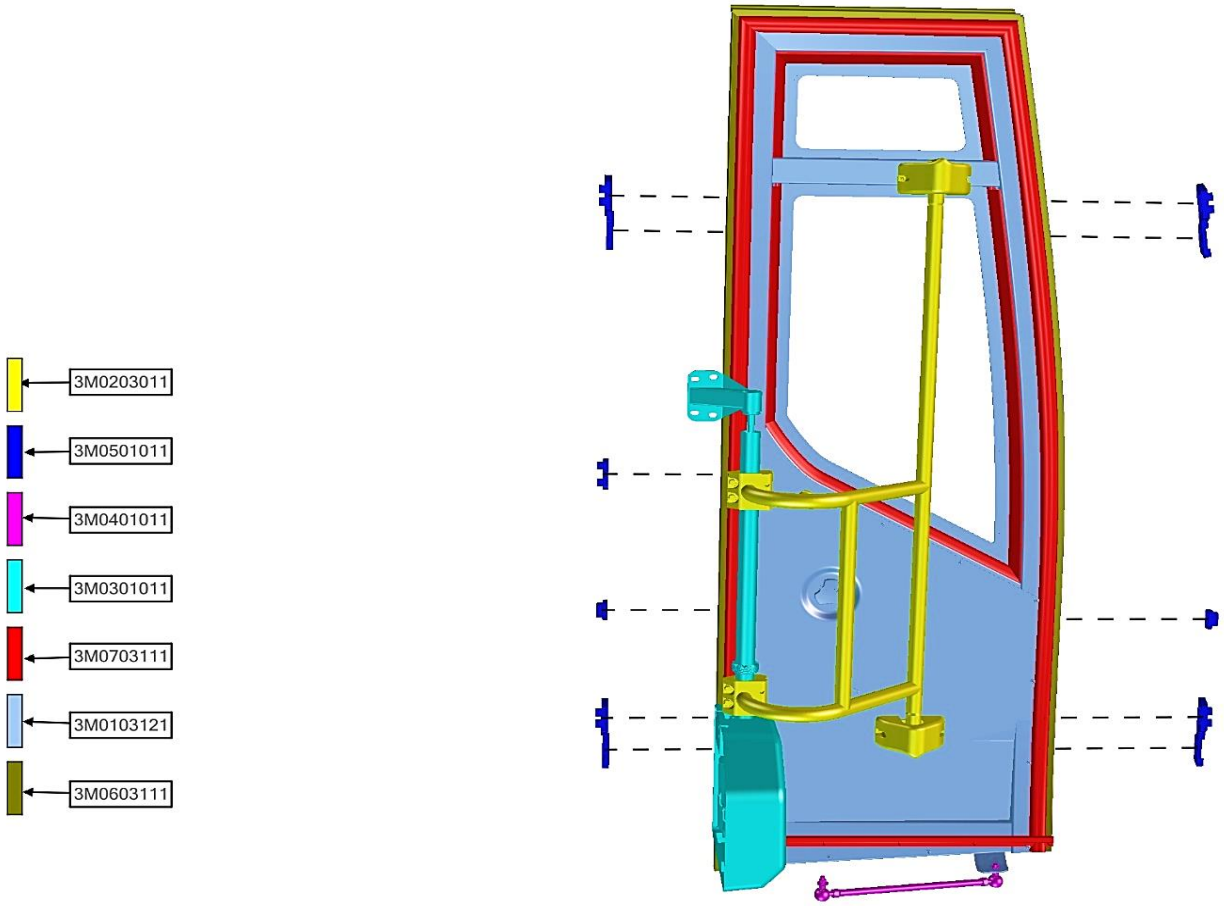

NAME_ASSB	CODE_PART NO	NAME	QTY
PASSENGER DOOR - ASSY	3M0703111	WEATHERSTRIP	1
	3M0103121	PASSENGER DOOR	1
	3M0603111	MOULDING	1
	3M0301011	PASSENGER DOOR PUMB PILLAR - ASSY	1
	3M0401011	PASSENGER DOOR TURNBUCKLE - ASSY	1
	3M0501011	STOPPER - ASSY	1
	3M0203011	PASSENGER DOOR LEVER ARM	1

NAME_ASSB	CODE_PART NO	NAME	QTY
PASSENGER DOOR - ASSY			

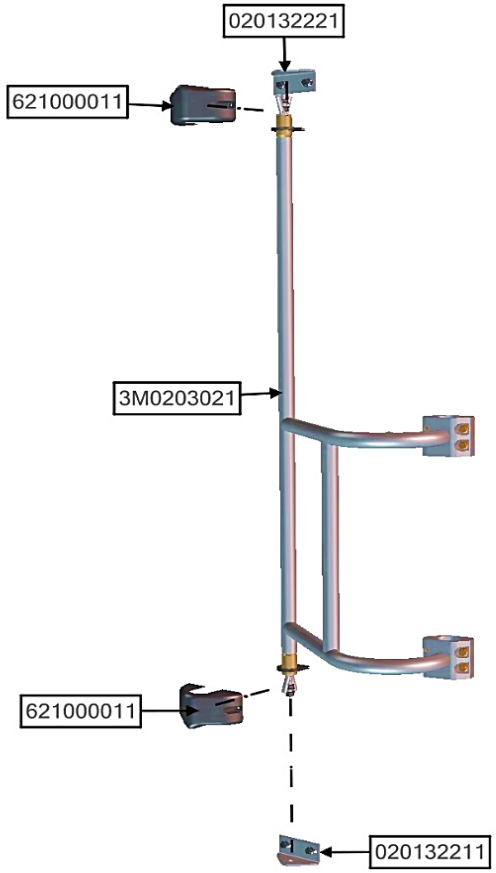

NAME_ASSB	CODE_PART NO	NAME	QTY
PASSENGER DOOR LEVER ARM	3M0203021	PASSENGER DOOR LEVER ARM	1
	621000011	TRIM DOOR	2
	020132211	BRACKET	1
	020132221	BRACKET	1

NAME_ASSB	CODE_PART NO	NAME	QTY
PASSENGER DOOR LEVER ARM			

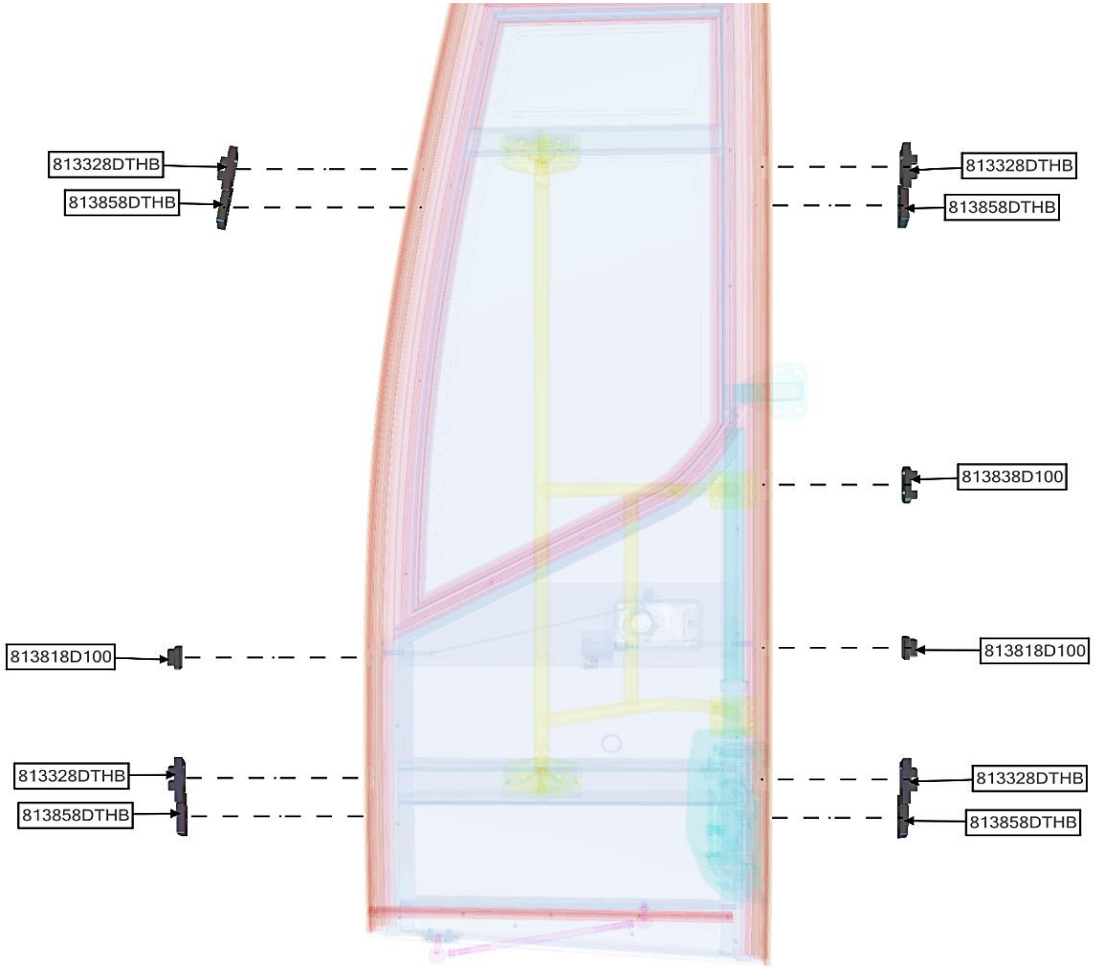

NAME_ASSB	CODE_PART NO	NAME	QTY
STOPPER - ASSY	813328DTHB	RETAINER - ASSY	4
	813858DTHB	RETAINER - ASSY	4
	813818D100	STOPPER	2
	813838D100	STOPPER	1

NAME_ASSB	CODE_PART NO	NAME	QTY
STOPPER - ASSY			

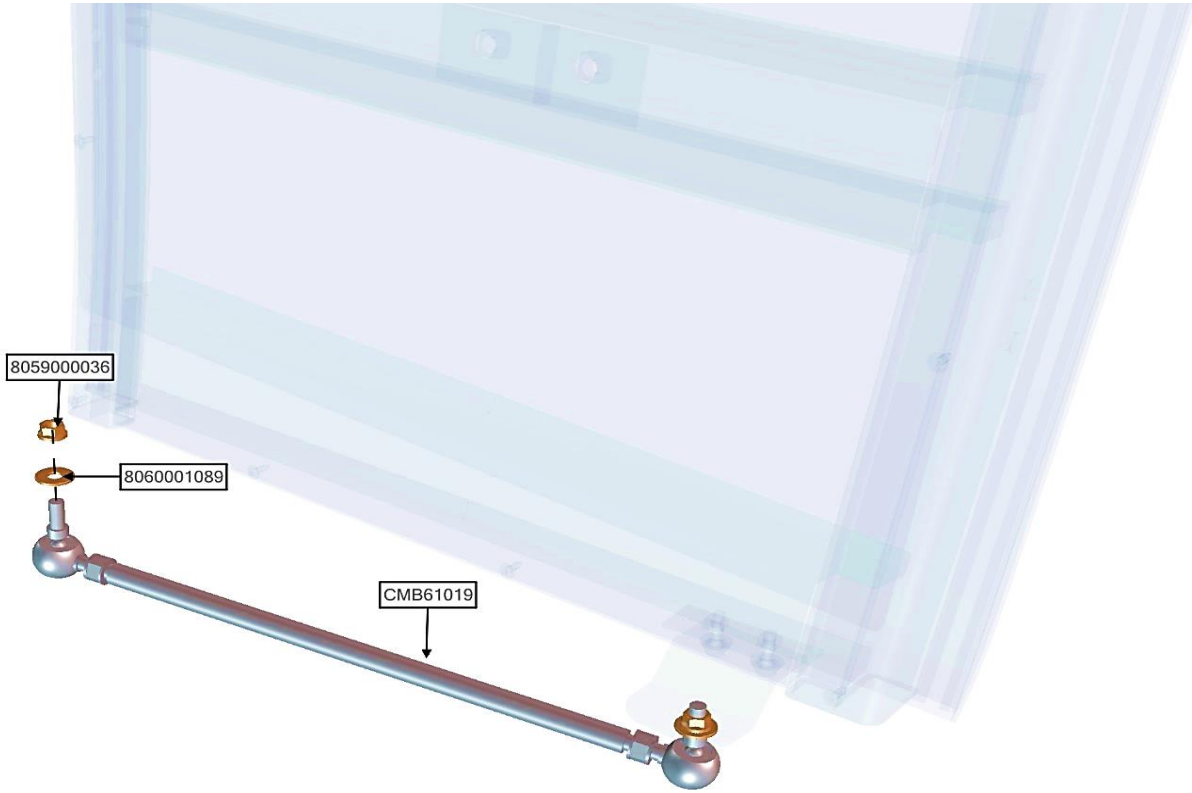

NAME_ASSB	CODE_PART NO	NAME	QTY
PASSENGER DOOR TURNBUCKLE ASSY	CMB61019	PASSENGER DOOR TURNBUCKLE	1
	8059000036	NUT 10125	1
	8060001089	WASHER Ø10	1

NAME_ASSB	CODE_PART NO	NAME	QTY
PASSENGER DOOR TURNBUCKLE ASSY			

NAME_ASSB	CODE_PART NO	NAME	QTY
STEEL SHEET CHASSIS	350930181	PARTITION REAL 03	1
	351330521	PARTITION FRONT05	1
	350930341	FRAME	1
	350930271	FRAME	1

NAME_ASSB	CODE_PART NO	NAME	QTY
STEEL SHEET CHASSIS			

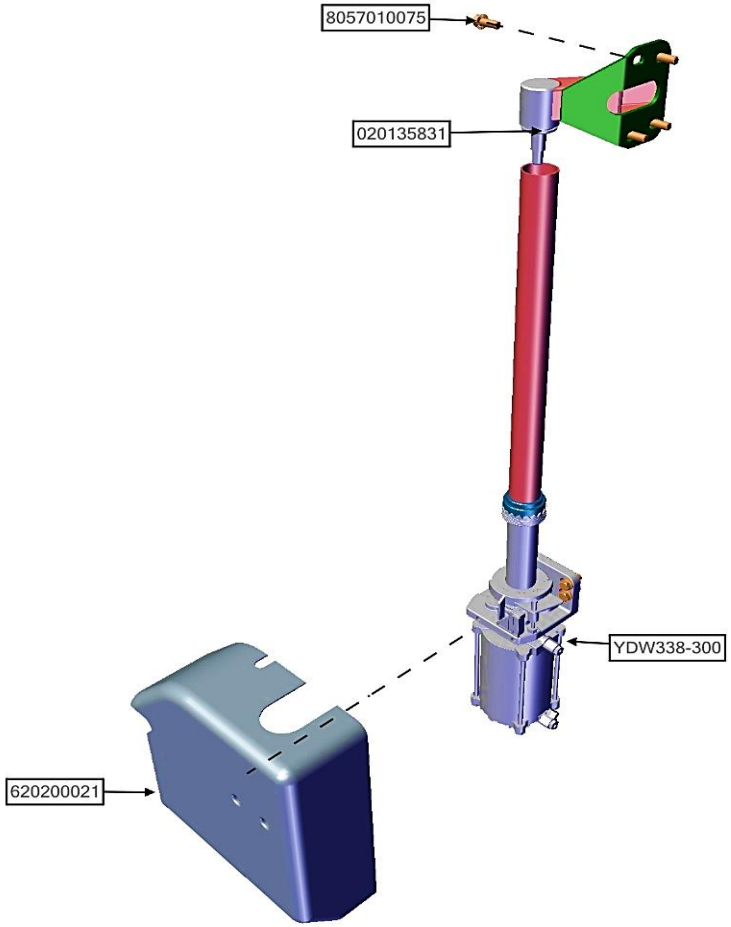

NAME_ASSB	CODE_PART NO	NAME	QTY
PASSENGER DOOR PUMB PILLAR - ASSY	020135831	BRACKET	1
	620200021	COVER	1
	8057010075	CONNECTOR 620046	8
	YDW338-300	DOOR PUMP	1

NAME_ASSB	CODE_PART NO	NAME	QTY
PASSENGER DOOR PUMB PILLAR - ASSY			

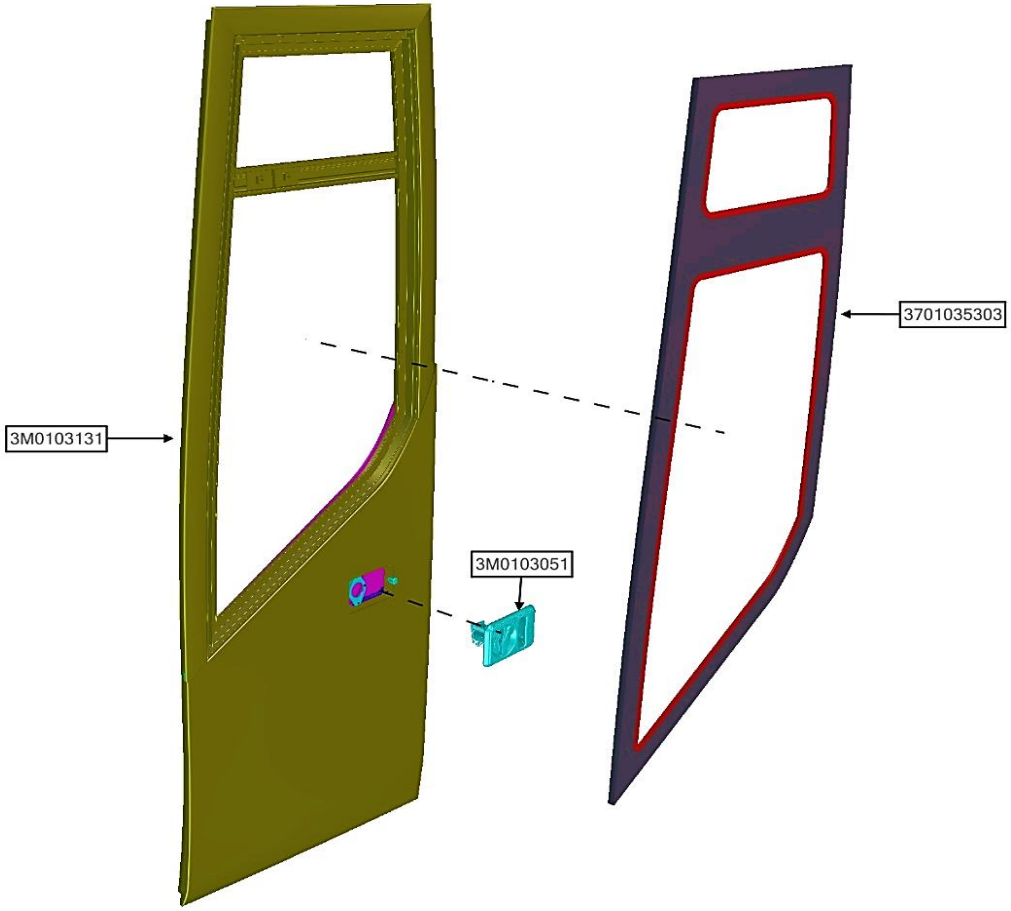

NAME_ASSB	CODE_PART NO	NAME	QTY
PASSENGER DOOR	3M0103131	ALUMINUM FRAME DOOR	1
	3M0103051	HANDLE - ASSY	1
	3701035303	PASSENGER DOOR GLASS	1

NAME_ASSB	CODE_PART NO	NAME	QTY
PASSENGER DOOR			

NAME_ASSB	CODE_PART NO	NAME	QTY
CABIN FLOOR FRAME ASSY	010035001	SQUARE PIPE 19	1
	010034991	SQUARE PIPE 18	1
	010034981	SQUARE PIPE 17	1
	010034971	SQUARE PIPE 16	1
	010037551	SQUARE PIPE 23	1
	010034951	SQUARE PIPE 14	1
	350630251	STEEL SHEET 03	1
	010034911	SQUARE PIPE 10	1
	010034901	SQUARE PIPE 09	1
	010034881	SQUARE PIPE 07	1
	010034871	SQUARE PIPE 06	1
	010034861	SQUARE PIPE 05	1
	010034831	SQUARE PIPE 02	1
	010034821	SQUARE PIPE 01	1

NAME_ASSB	CODE_PART NO	NAME	QTY
CABIN FLOOR FRAME ASSY			

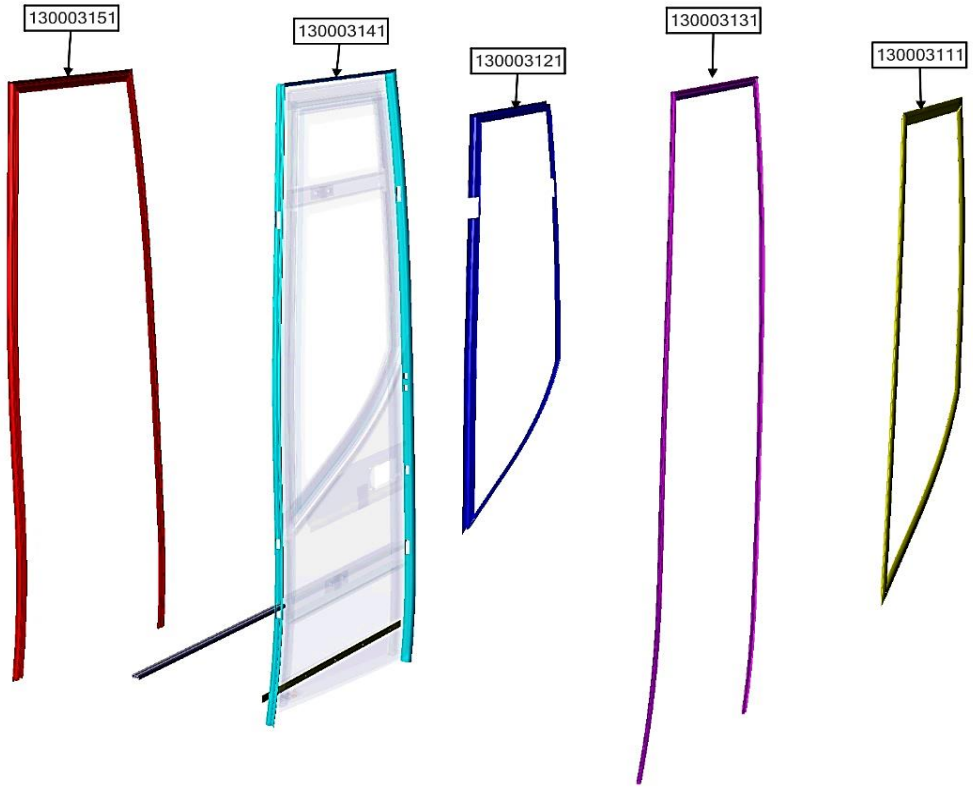

NAME_ASSB	CODE_PART NO	NAME	QTY
WEATHERSTRIP	130003111	WEATHERSTRIP	1
	130003121	WEATHERSTRIP	1
	130003131	RUBBER-SEALING	1
	130003141	WEATHERSTRIP	1
	130003151	WEATHERSTRIP	1

NAME_ASSB	CODE_PART NO	NAME	QTY
WEATHERSTRIP			

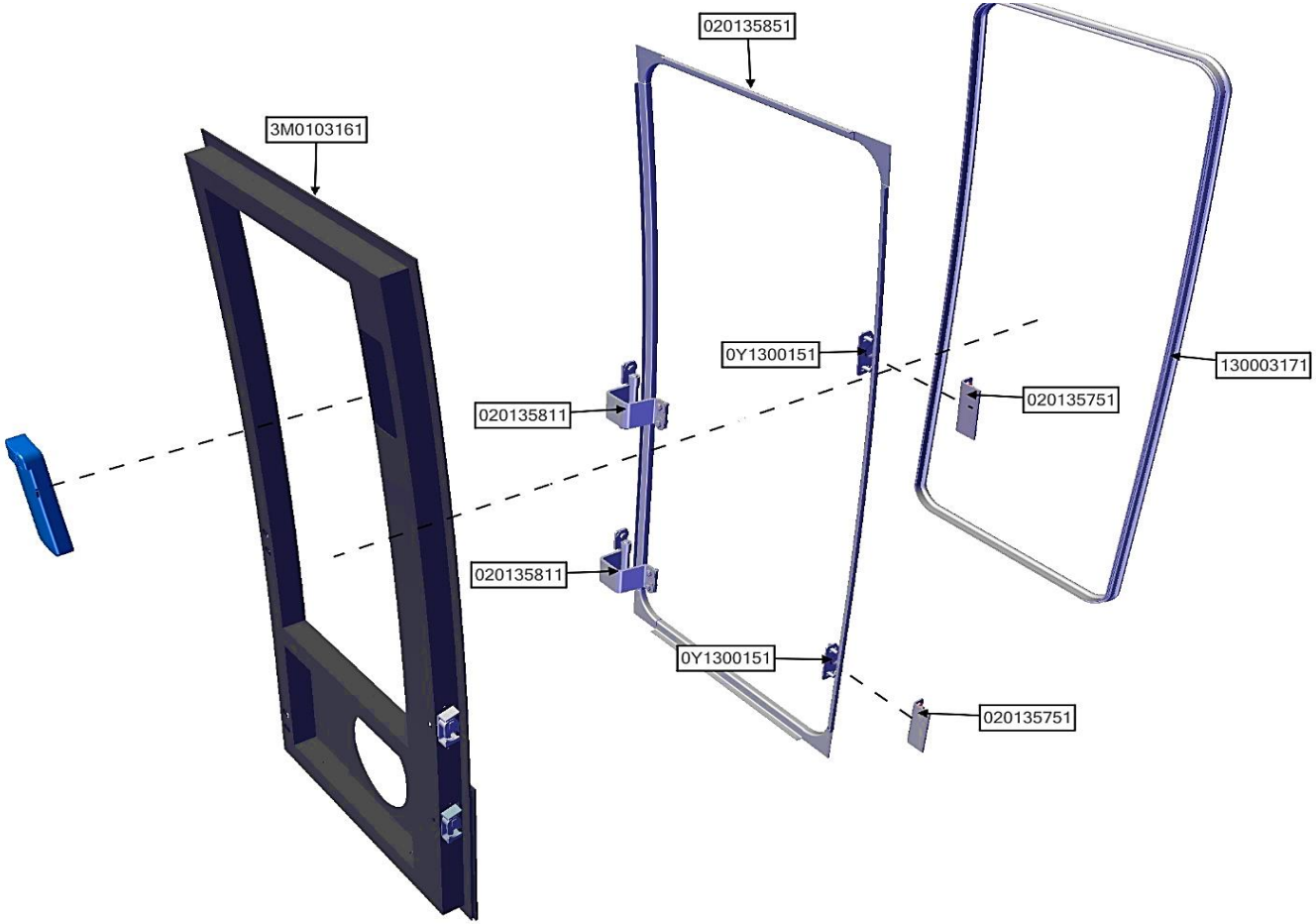

NAME_ASSB	CODE_PART NO	NAME	QTY
EMERGENCY DOOR	0Y1300151	STOPPER	2
	3M0103161	DOOR FRAME	1
	020135751	BRACKET	2
	020135811	HINGE	2
	020135851	MOULDING - ASSY	1
	130003171	WEATHERSTRIP	1

NAME_ASSB	CODE_PART NO	NAME	QTY
EMERGENCY DOOR			

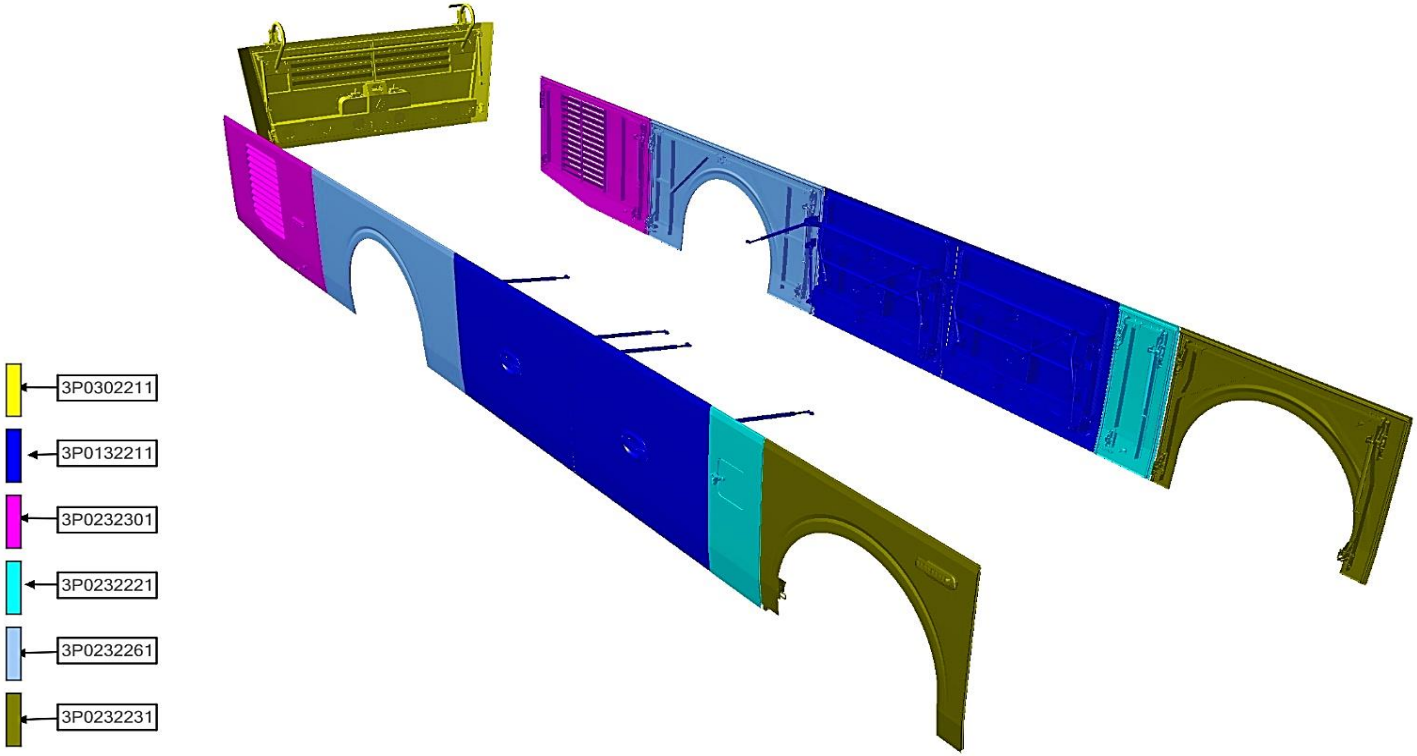

NAME_ASSB	CODE_PART NO	NAME	QTY
FLAP - ASSY	3P0132211	LUGGAGE FLAP - ASSY	1
	3P0232221	TANK FUEL FLAP ASSY	1
	3P0232231	FRONT FENDER FLAP ASSY	1
	3P0232261	RH REAR FENDER FLAP	1
	3P0232301	GRID FLAP	1
	3P0302211	REAR FLAP - ASSY	1

NAME_ASSB	CODE_PART NO	NAME	QTY
FLAP - ASSY			

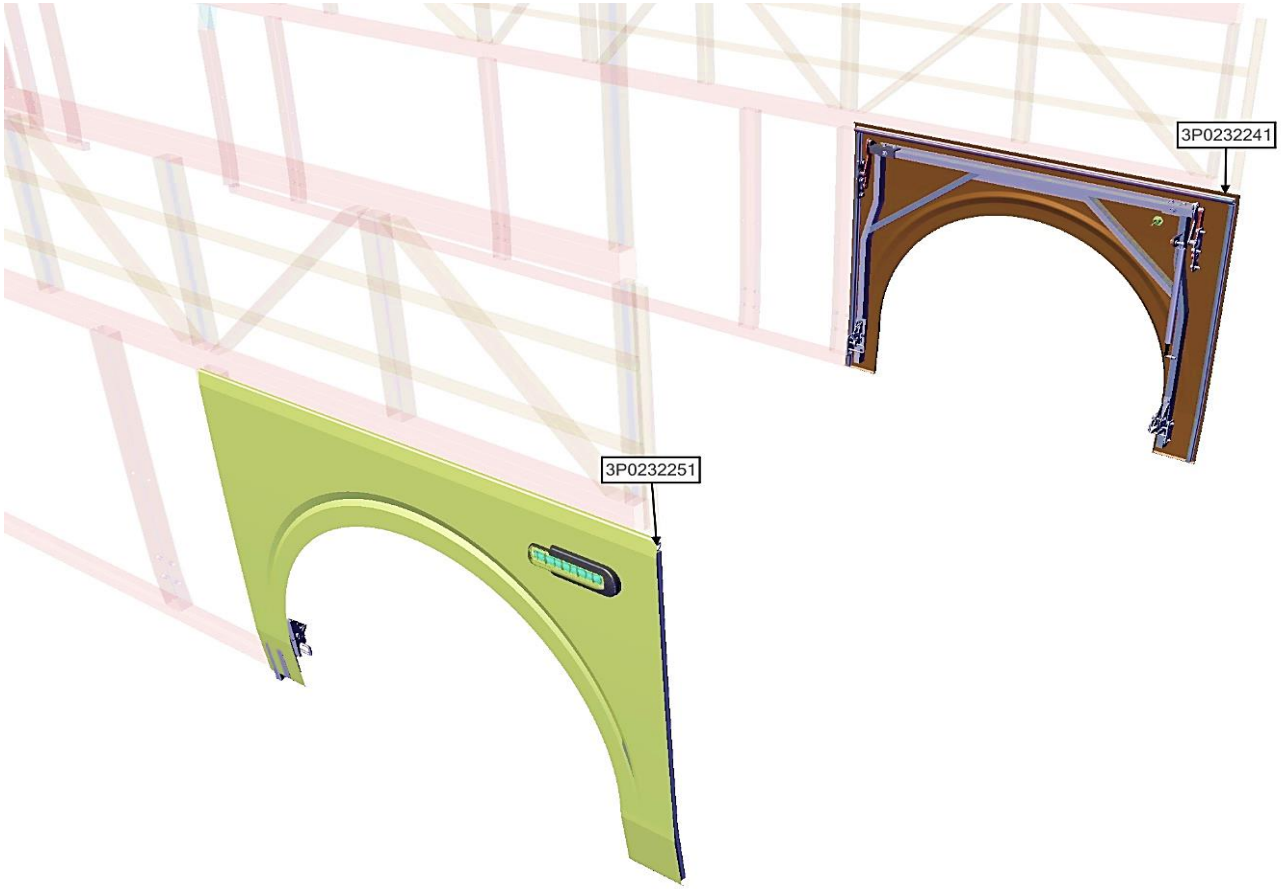

NAME_ASSB	CODE_PART NO	NAME	QTY
FRONT FENDER FLAP ASSY	3P0232241	FRONT FENDER FLAP LH	1
	3P0232251	FRONT FENDER FLAP RH	1

NAME_ASSB	CODE_PART NO	NAME	QTY
FRONT FENDER FLAP ASSY			

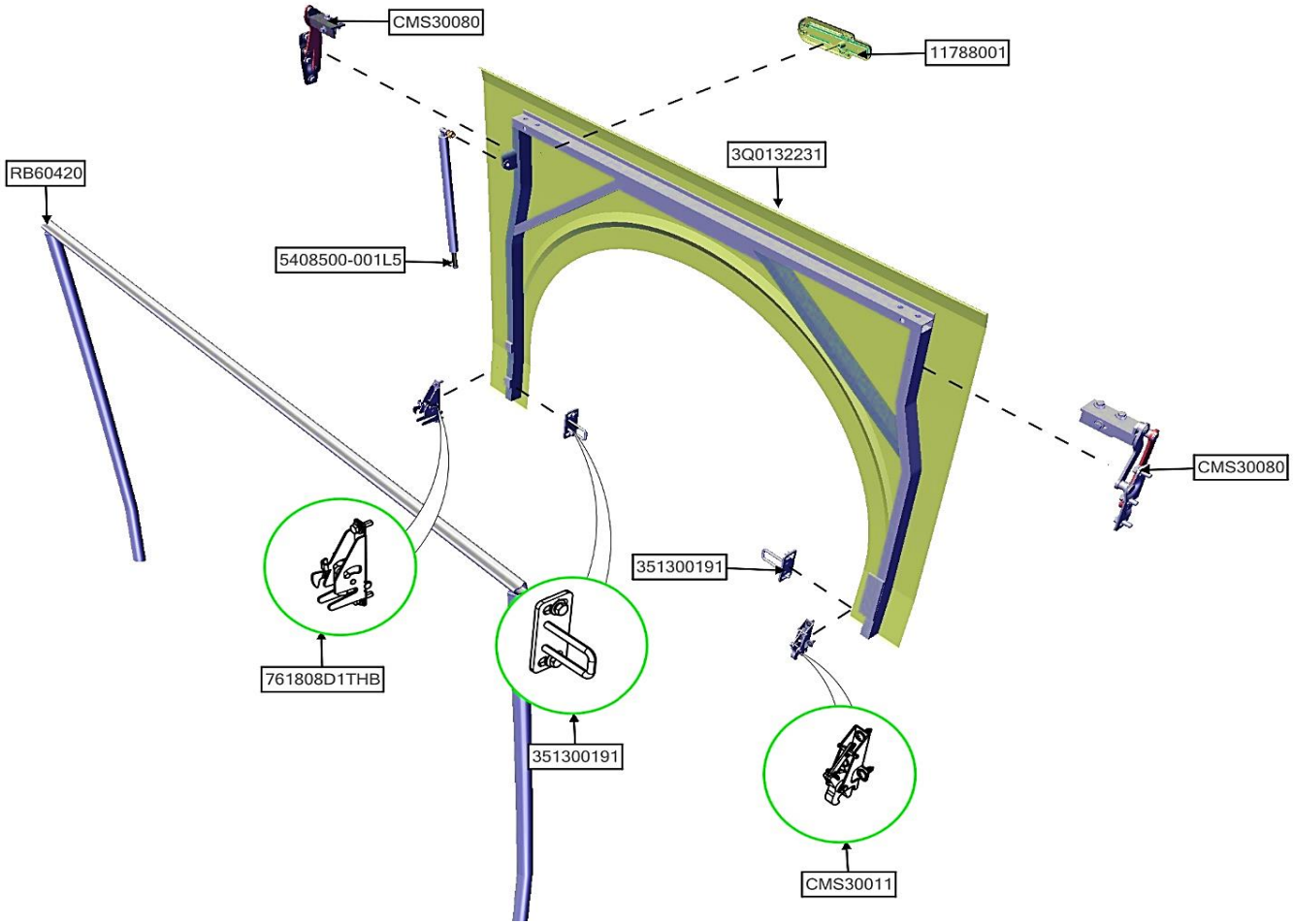

NAME_ASSB	CODE_PART NO	NAME	QTY
FRONT FENDER FLAP RH	3Q0132231	FLAP COVER	1
	761808D1THB	LOCK	1
	5408500-001L5	LIFTER - ASSY	1
	11788001	SIDELAMP	1
	351300191	STRIKER	2
	CMS30011	LOCK	1
	CMS30080	HINGE	2

NAME_ASSB	CODE_PART NO	NAME	QTY
FRONT FENDER FLAP RH	RB60420	RUBBER-SEALING	1

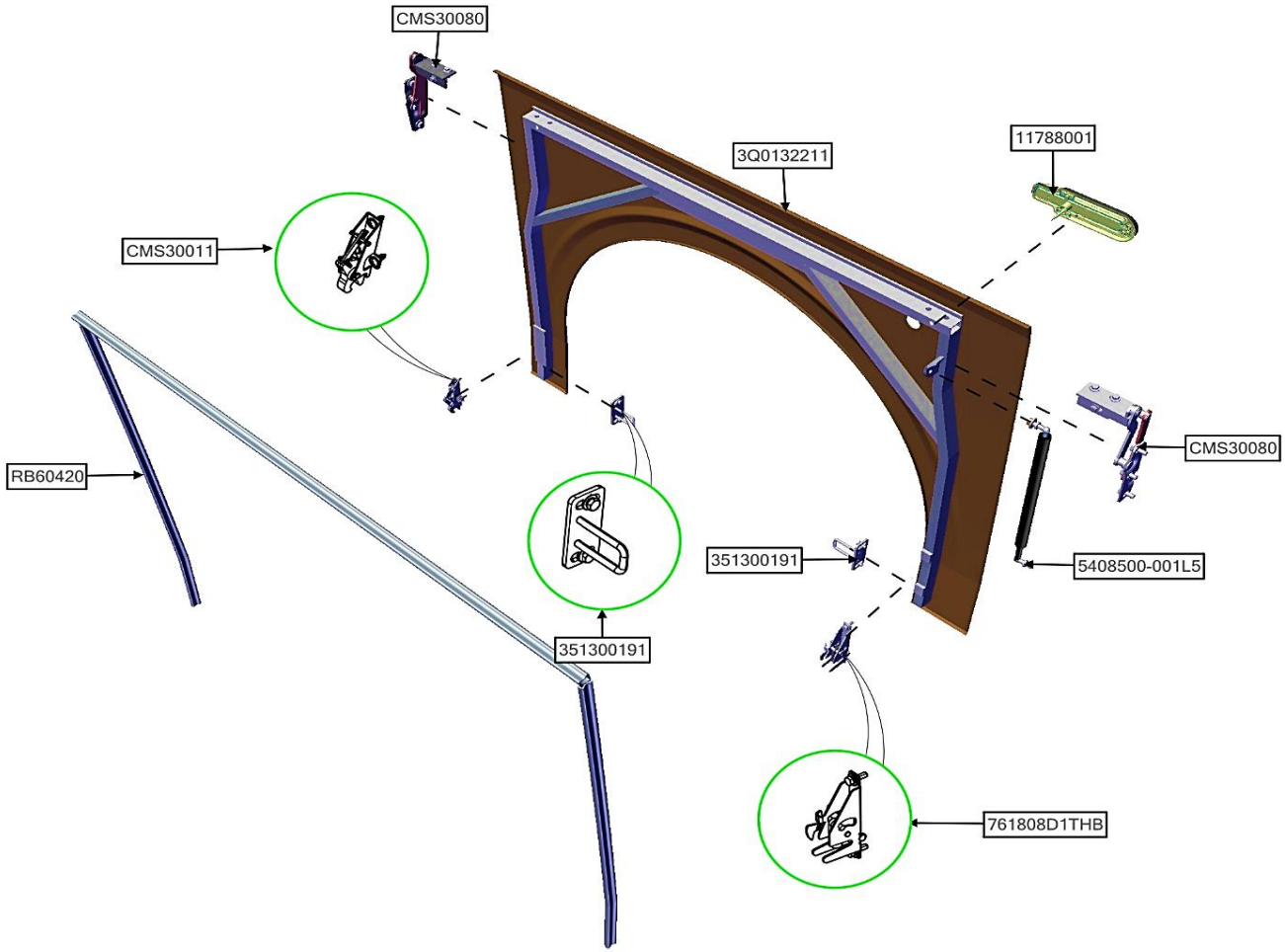

NAME_ASSB	CODE_PART NO	NAME	QTY
FRONT FENDER FLAP LH	3Q0132211	FLAP COVER	1
	761808D1THB	LOCK	1
	5408500-001L5	LIFTER - ASSY	1
	11788001	SIDELAMP	1
	351300191	STRIKER	2
	CMS30011	LOCK	1
	CMS30080	HINGE	2

NAME_ASSB	CODE_PART NO	NAME	QTY
FRONT FENDER FLAP LH	RB60420	RUBBER-SEALING	1

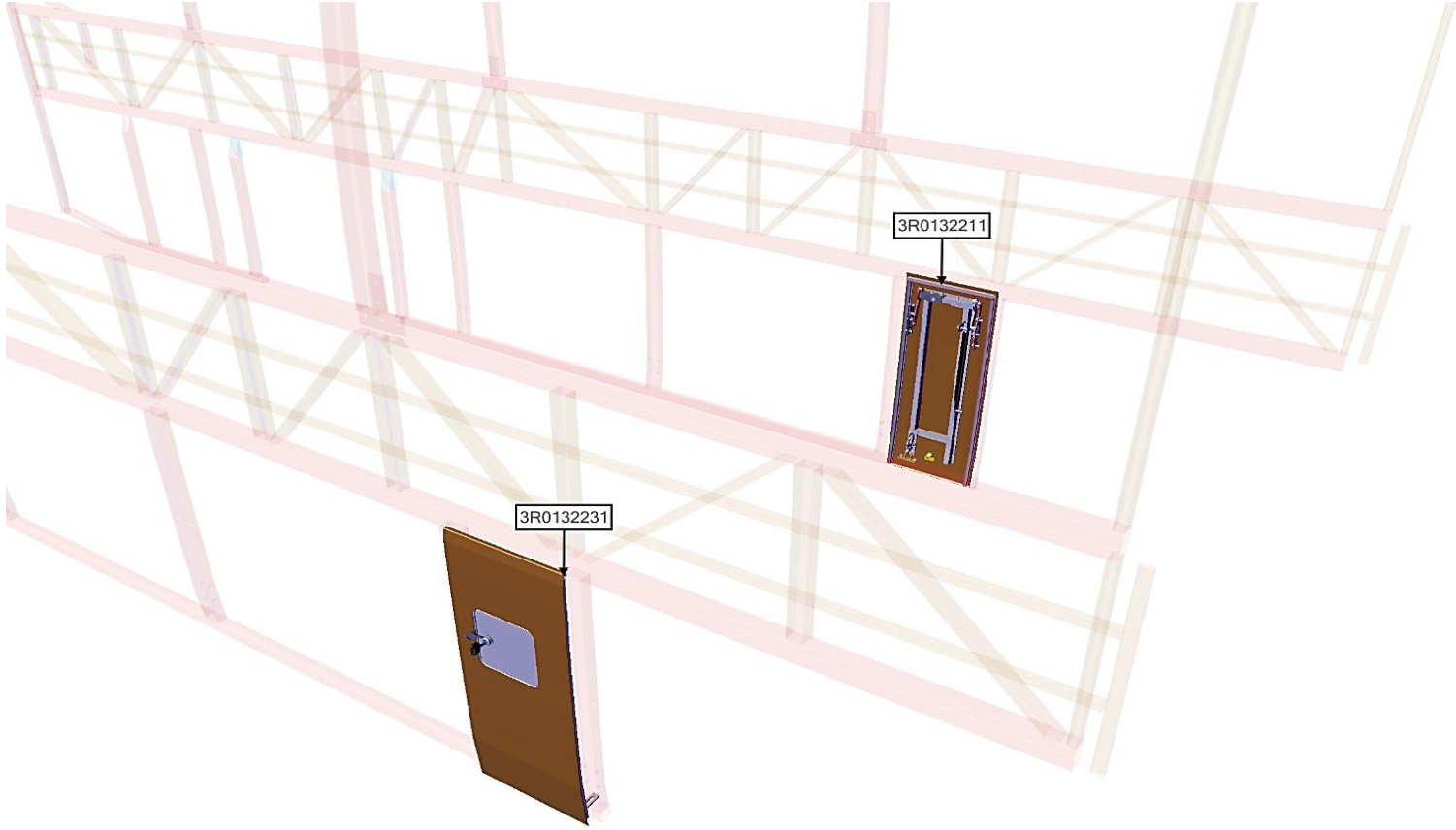

NAME_ASSB	CODE_PART NO	NAME	QTY
TANK FUEL FLAP ASSY	3R0132211	TANK FUEL FLAP LH ASSY	1
	3R0132231	TANK FUEL FLAP RH ASSY	1

NAME_ASSB	CODE_PART NO	NAME	QTY
TANK FUEL FLAP ASSY			

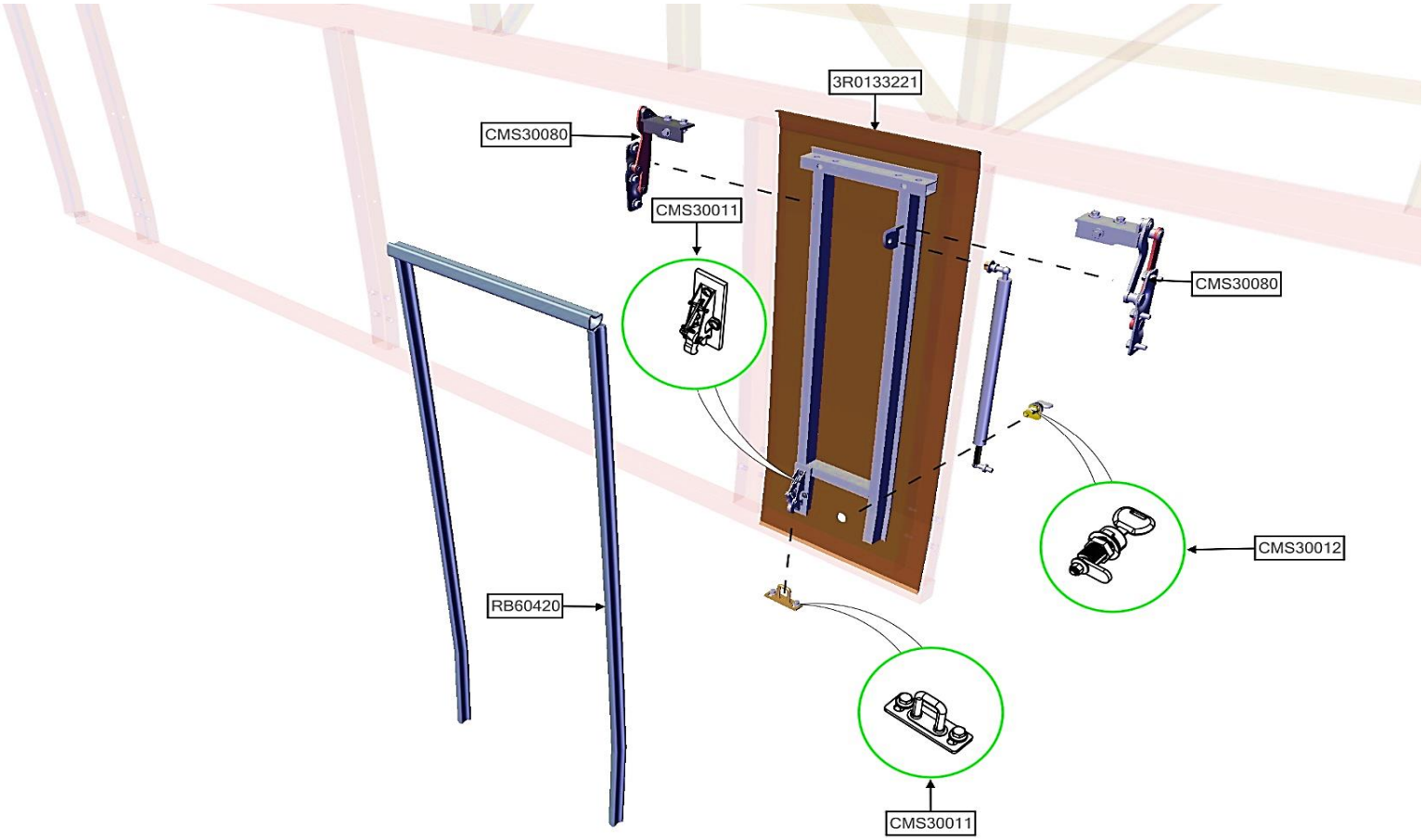

NAME_ASSB	CODE_PART NO	NAME	QTY
TANK FUEL FLAP LH ASSY	CMS30080	HINGE	2
	3R0133221	FLAP COVER	1
	RB60420	RUBBER-SEALING	1
	CMS30012	LOCK - ASSY	1
	CMS30011	LOCK	1
	CMS30011	LOCK - ASSY	1

NAME_ASSB	CODE_PART NO	NAME	QTY
TANK FUEL FLAP LH ASSY			

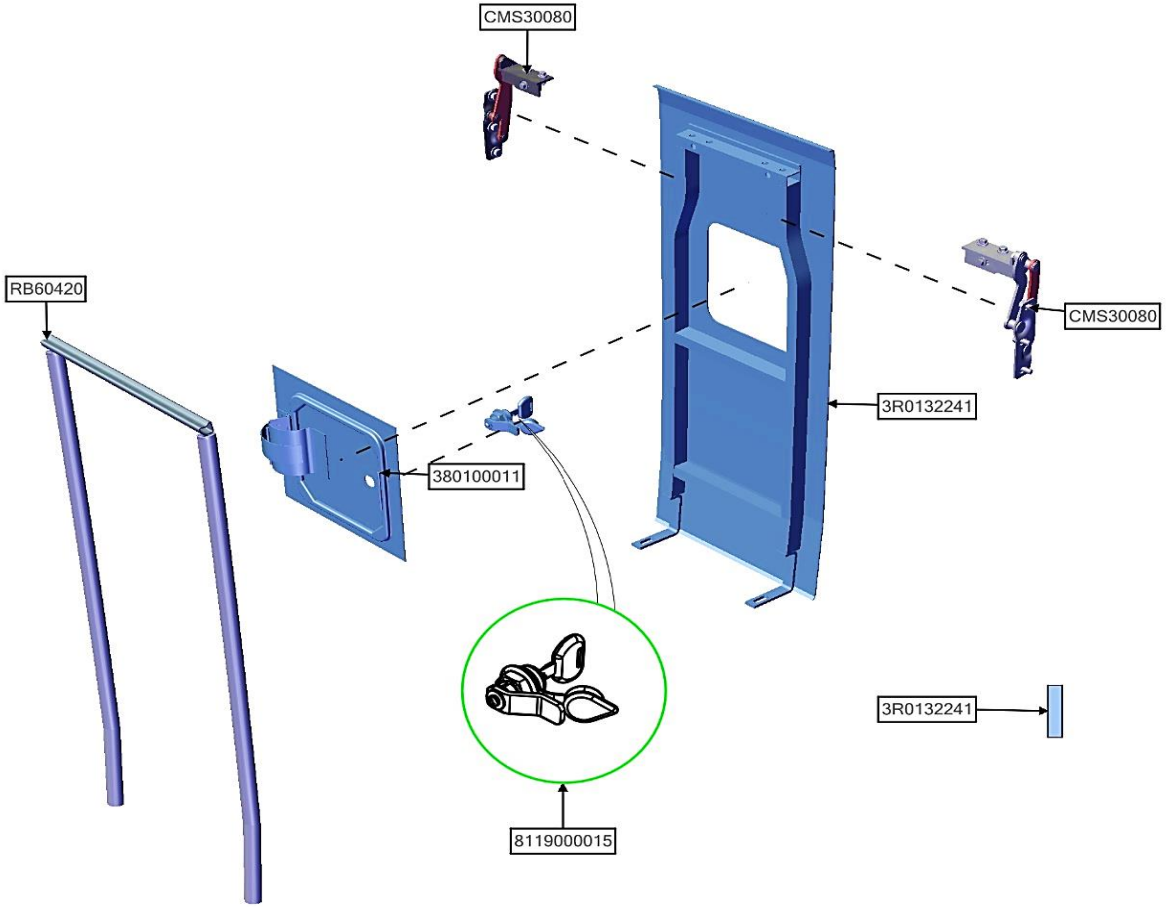

NAME_ASSB	CODE_PART NO	NAME	QTY
TANK FUEL FLAP RH ASSY	3R0132241	FLAP COVER	1
	380100011	FUEL TANK CAP ASSY	1
	8119000015	LOCK - ASSY	1
	CMS30080	HINGE	2
	RB60420	RUBBER-SEALING	1

NAME_ASSB	CODE_PART NO	NAME	QTY
TANK FUEL FLAP RH ASSY			

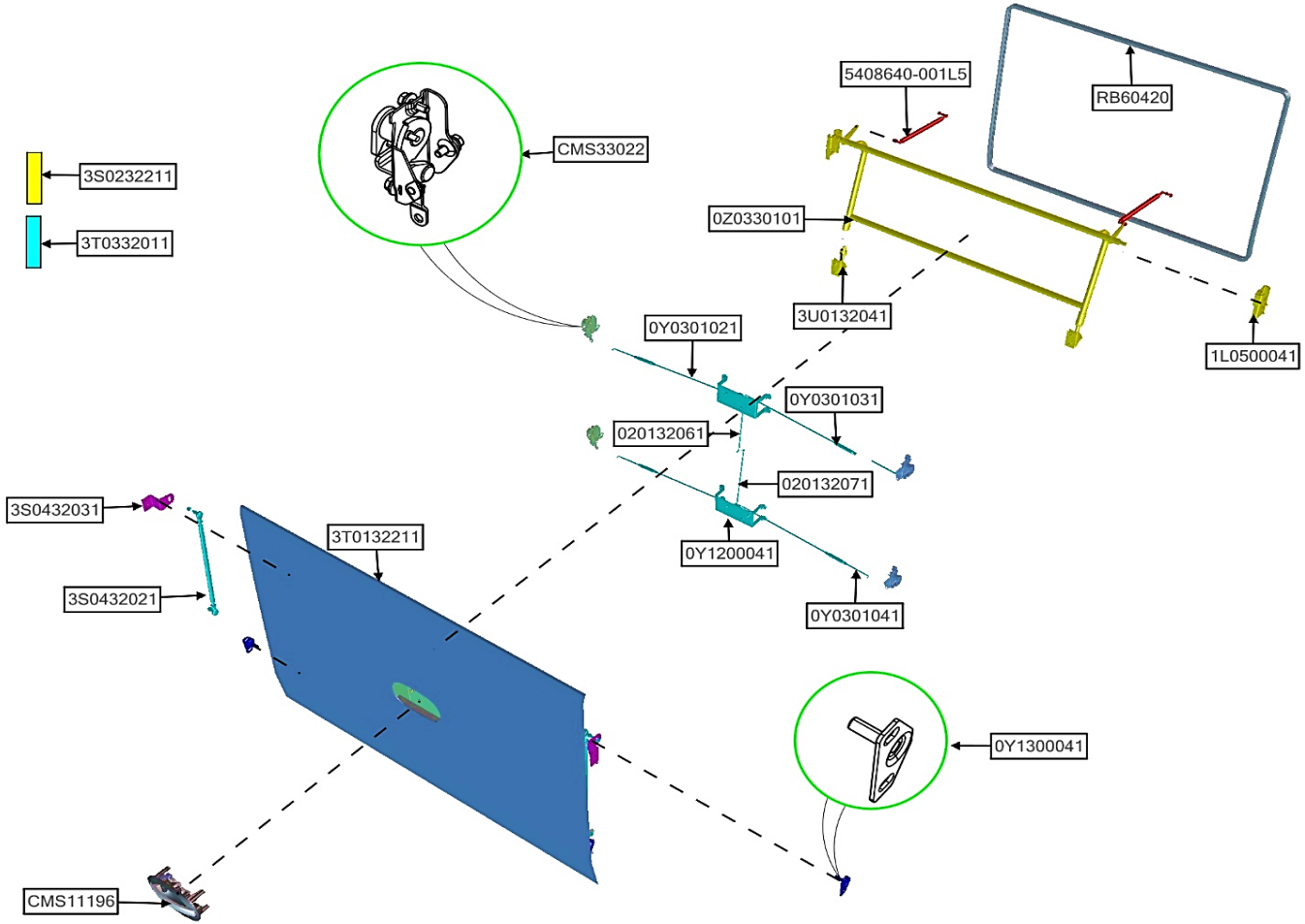

NAME_ASSB	CODE_PART NO	NAME	QTY
LUGGAGE FLAP - ASSY	1L0500041	HINGE	2
	0Y1200041	HANDLE - ASSY	2
	3S0232211	LUGGAGE FLAP LEVER ARM - ASSY	1
	0Z0330101	LUGGAGE FLAP LEVER ARM	1
	3T0332011	LINK - ASSY	1
	0Y1300041	LOCK - ASSY	4
	CMS33022	STRIKER ASSY	4

NAME_ASSB	CODE_PART NO	NAME	QTY
LUGGAGE FLAP - ASSY	3T0132211	FLAP COVER	1
	3S0432031	BRACKET	2
	RB60420	RUBBER-SEALING	1
	CMS11196	LINK - ASSY	1
	0Y0301031	LINK ROB 03	4
	0Y0301041	LINK ROB 04	4
	0Y0301021	LINK ROB	4

NAME_ASSB	CODE_PART NO	NAME	QTY
LUGGAGE FLAP - ASSY	020132061	LINK ROB	1
	020132071	LINK ROB	1
	5408640-001L5	LIFTER - ASSY	2
	3U0132041	LUGGAGE FLAP TURNBUCKLE	2
	3S0432021	LUGGAGE FLAP TURNBUCKLE	2

NAME_ASSB	CODE_PART NO	NAME	QTY
LUGGAGE FLAP - ASSY	90013050025	BU LÔNG LỤC GIÁC	3

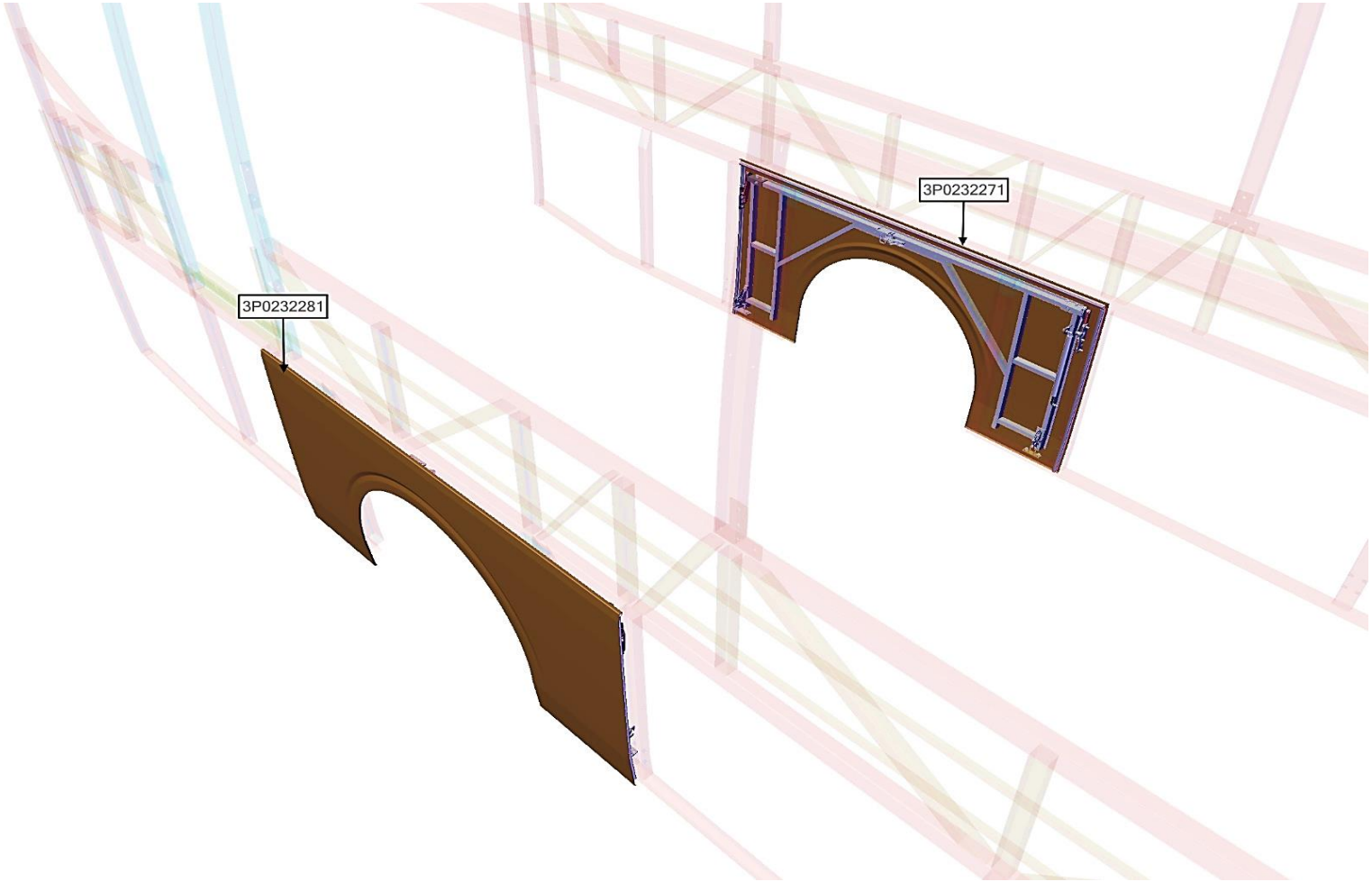

NAME_ASSB	CODE_PART NO	NAME	QTY
RH REAR FENDER FLAP	3P0232271	REAR FENDER FLAP LH	1
	3P0232281	REAR FENDER FLAP RH	1

NAME_ASSB	CODE_PART NO	NAME	QTY
RH REAR FENDER FLAP			

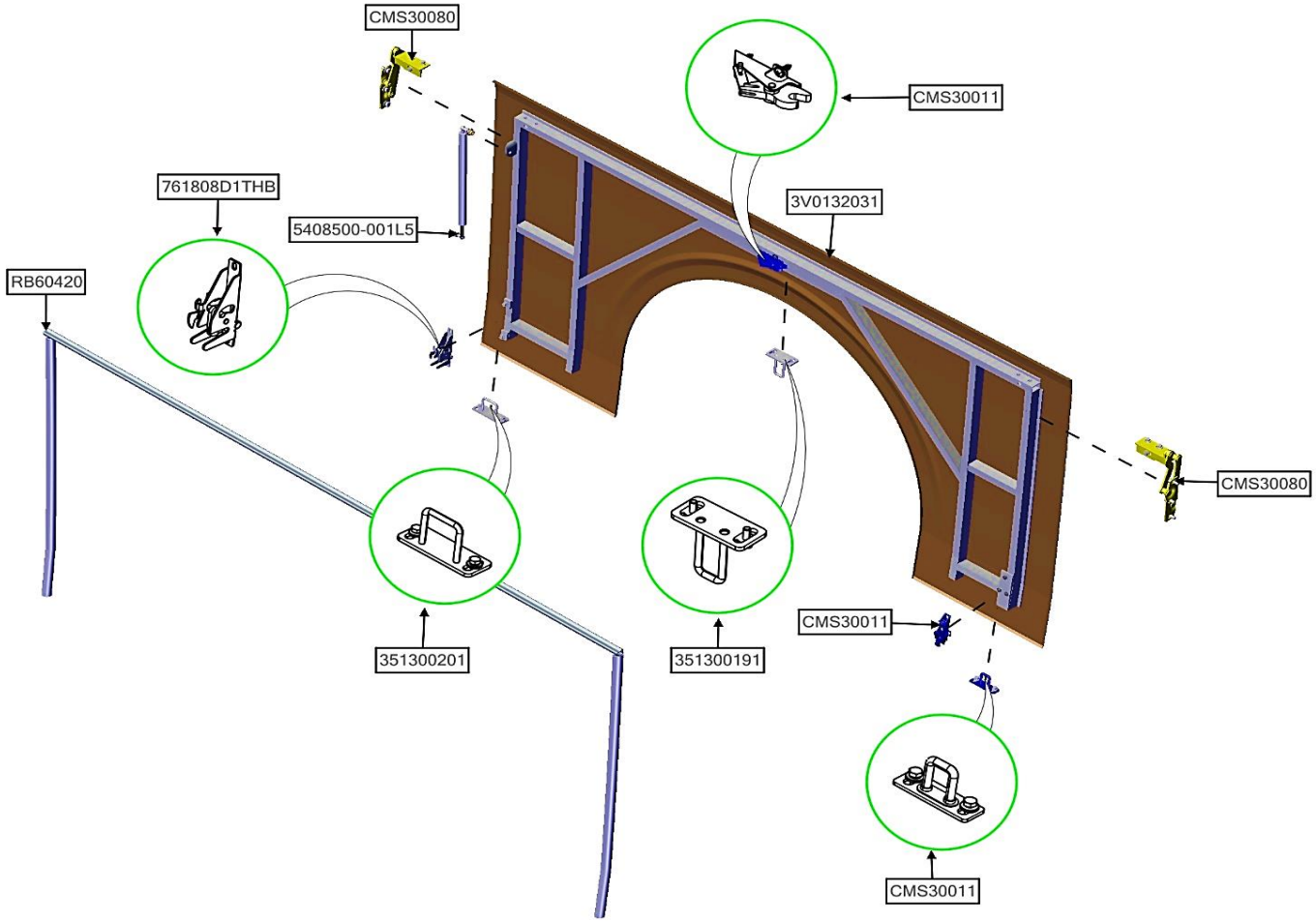

NAME_ASSB	CODE_PART NO	NAME	QTY
REAR FENDER FLAP RH	3V0132031	FLAP COVER	1
	761808D1THB	LOCK	1
	5408500-001L5	LIFTER - ASSY	1
	351300191	STRIKER	1
	351300201	STRIKER	1
	CMS30011	LOCK	3
	CMS30080	HINGE	2

NAME_ASSB	CODE_PART NO	NAME	QTY
REAR FENDER FLAP RH	RB60420	RUBBER-SEALING	1

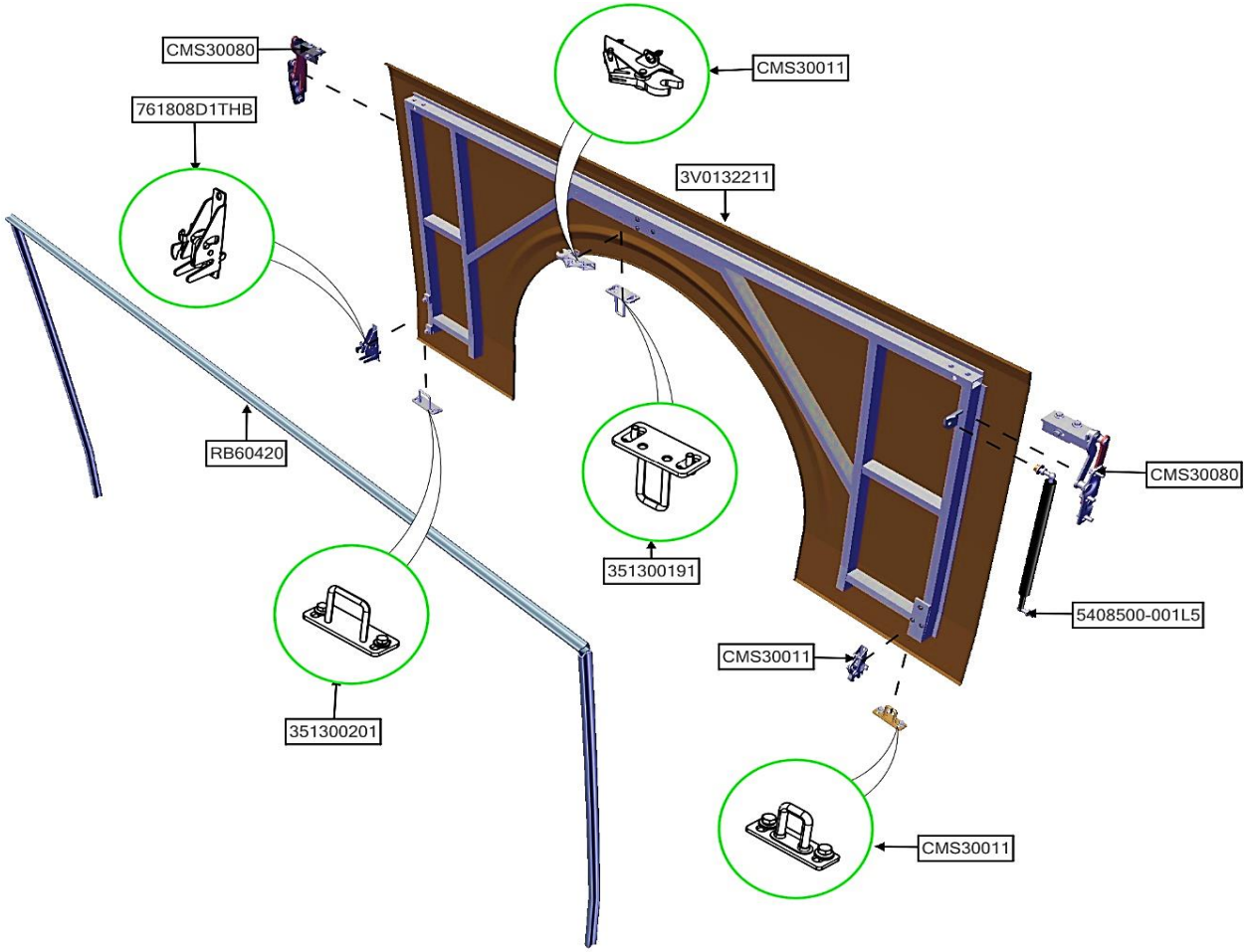

NAME_ASSB	CODE_PART NO	NAME	QTY
REAR FENDER FLAP LH	3V0132211	FLAP COVER	1
	761808D1THB	LOCK	1
	5408500-001L5	LIFTER - ASSY	1
	351300191	STRIKER	1
	351300201	STRIKER	1
	CMS30011	LOCK	3
	CMS30080	HINGE	2

NAME_ASSB	CODE_PART NO	NAME	QTY
REAR FENDER FLAP LH	RB60420	RUBBER-SEALING	1

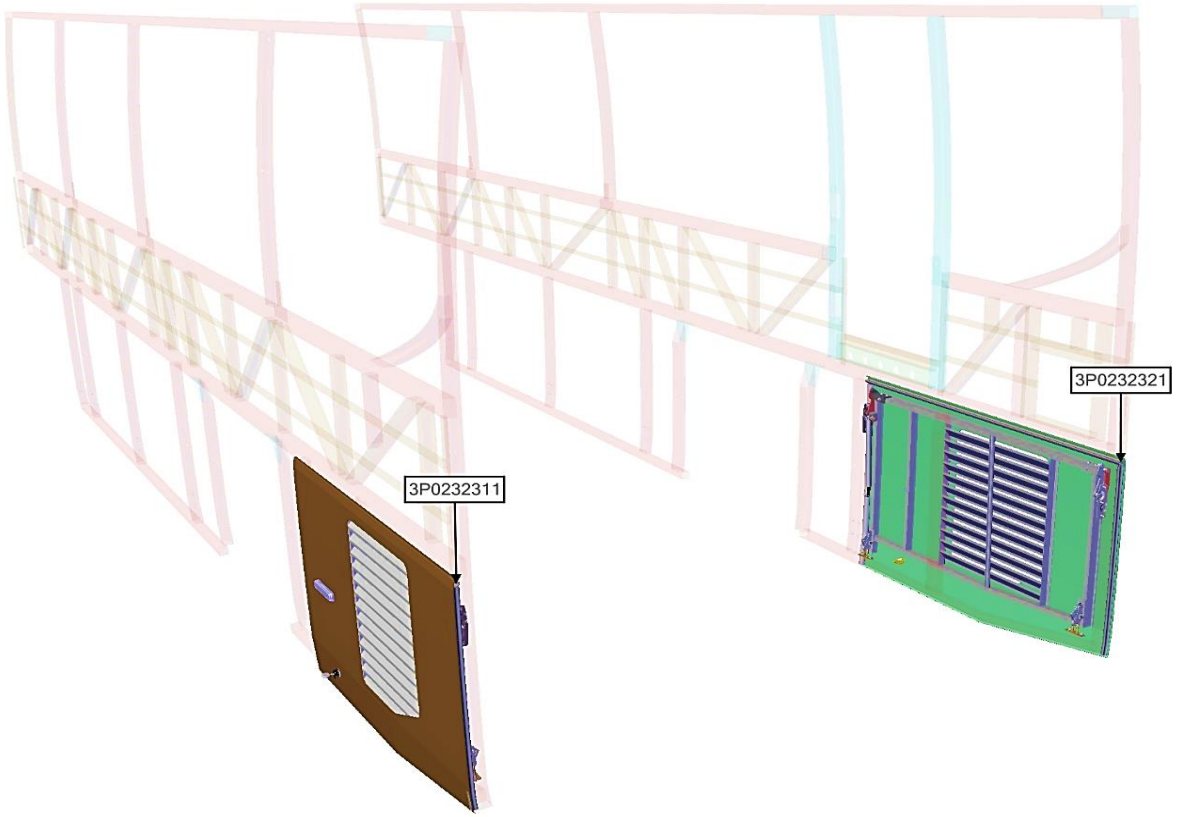

NAME_ASSB	CODE_PART NO	NAME	QTY
FLAP GILD - ASSY	3P0232311	GRID FLAP LH	1
	3P0232321	GRID FLAP RH	1

NAME_ASSB	CODE_PART NO	NAME	QTY
FLAP GILD - ASSY			

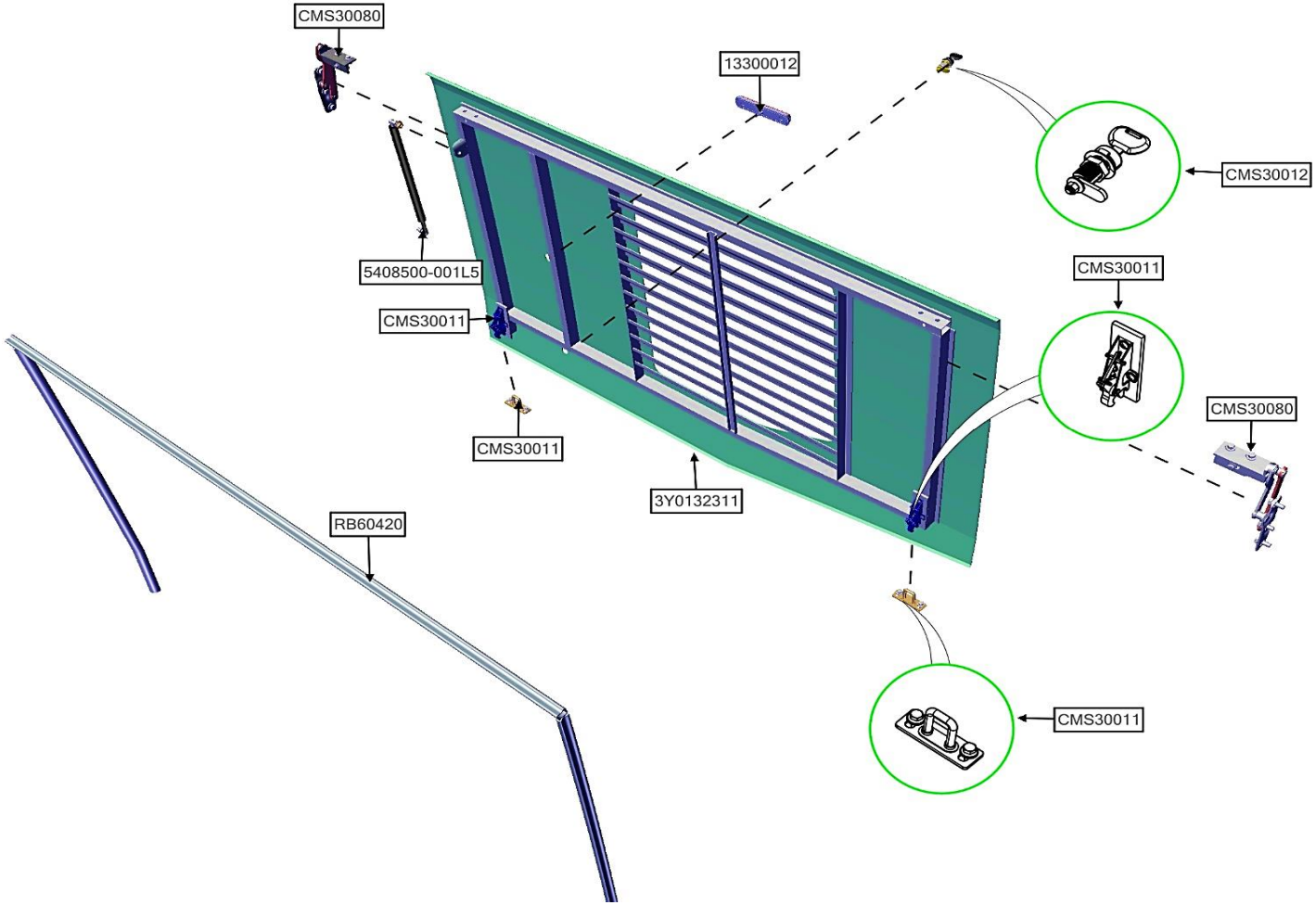

NAME_ASSB	CODE_PART NO	NAME	QTY
GRID FLAP RH	3Y0132311	FLAP COVER	1
	5408500-001L5	LIFTER - ASSY	1
	13300012	SIDE MARKER LAMP	1
	CMS30011	LOCK	2
	CMS30011	LOCK - ASSY	2
	CMS30012	LOCK - ASSY	1
	CMS30080	HINGE	2

NAME_ASSB	CODE_PART NO	NAME	QTY
GRID FLAP RH	RB60420	RUBBER-SEALING	1

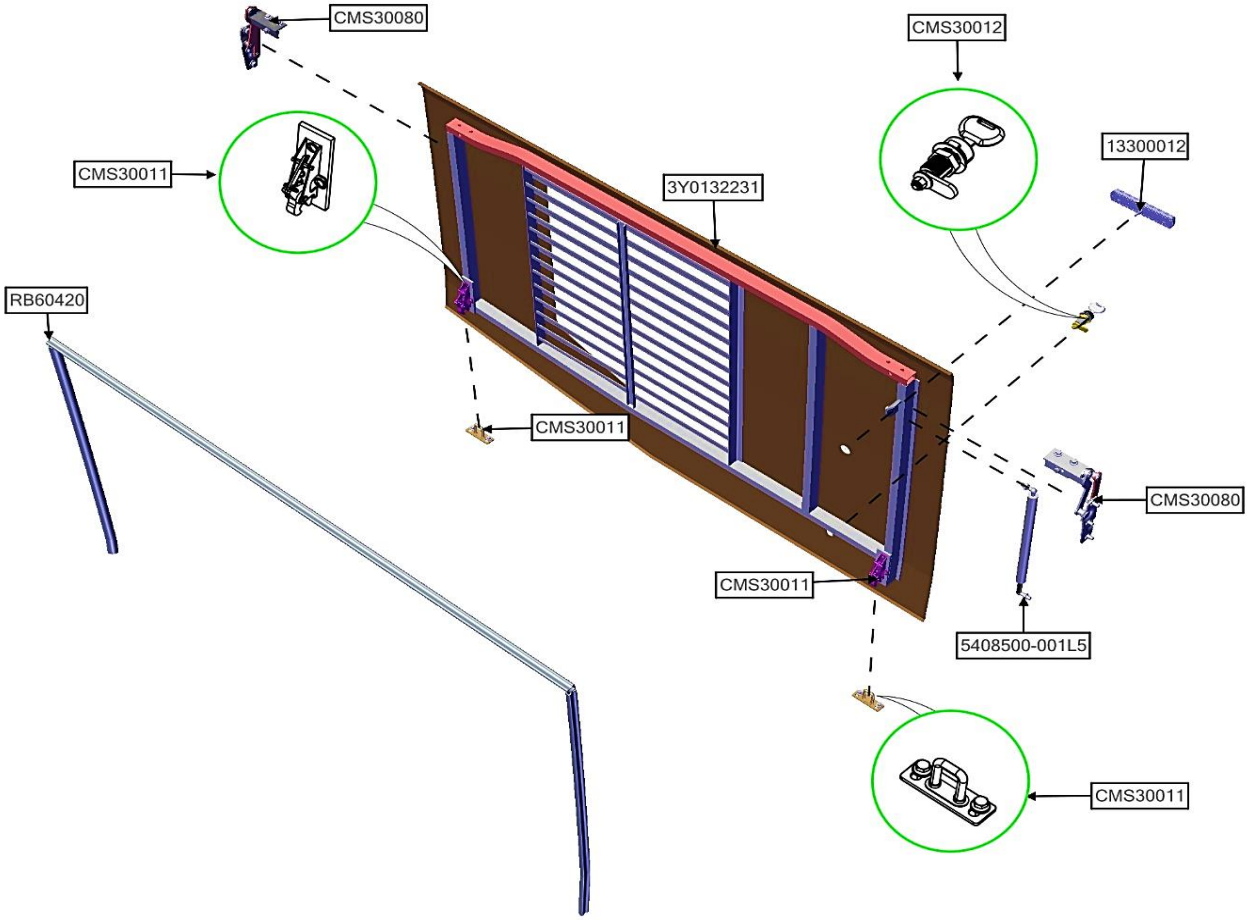

NAME_ASSB	CODE_PART NO	NAME	QTY
GRID FLAP LH	3Y0132231	FLAP COVER	1
	5408500-001L5	LIFTER - ASSY	1
	13300012	SIDE MARKER LAMP	1
	CMS30011	LOCK	2
	CMS30011	LOCK - ASSY	2
	CMS30012	LOCK - ASSY	1
	CMS30080	HINGE	2

NAME_ASSB	CODE_PART NO	NAME	QTY
GRID FLAP LH	RB60420	RUBBER-SEALING	1

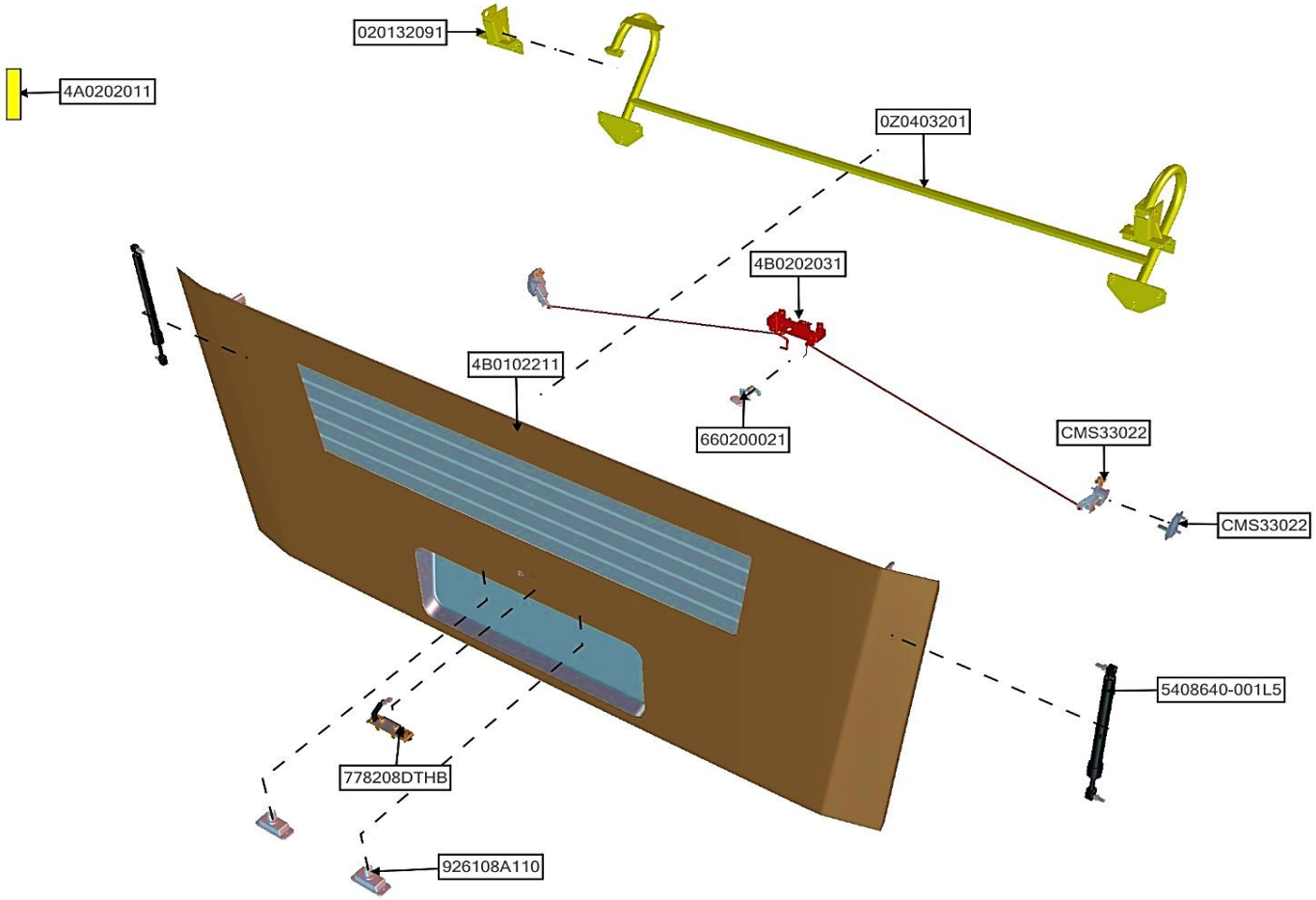

NAME_ASSB	CODE_PART NO	NAME	QTY
REAR FLAP - ASSY	4B0230051	REAR FLAP LINK - ASSY	1
	4B0202031	LOCK	1
	4A0202011	REAR FLAP LEVER ARM - ASSY	1
	660200021	LOCK - ASSY	1
	0Z0403201	REAR FLAP LEVER ARM	1
	CMS33022	LOCK	2
	CMS33022	STRIKER - ASSY	2

NAME_ASSB	CODE_PART NO	NAME	QTY
REAR FLAP - ASSY	4B0102211	FLAP COVER	1
	020132091	BRACKET	2
	778208DTHB	ENGINE FLAP HANDLE	1
	5408640-001L5	LIFTER - ASSY	2
	926108A110	NUMBER PLATE LAMP	2

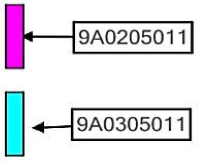

NAME_ASSB	CODE_PART NO	NAME	QTY
ELECTRIC SYSTEM	9A0205011	CONDUCTOR WIRE SYSTEM	1
	9A0305011	ELECTRICAL DEVICE	1

NAME_ASSB	CODE_PART NO	NAME	QTY
ELECTRIC SYSTEM			

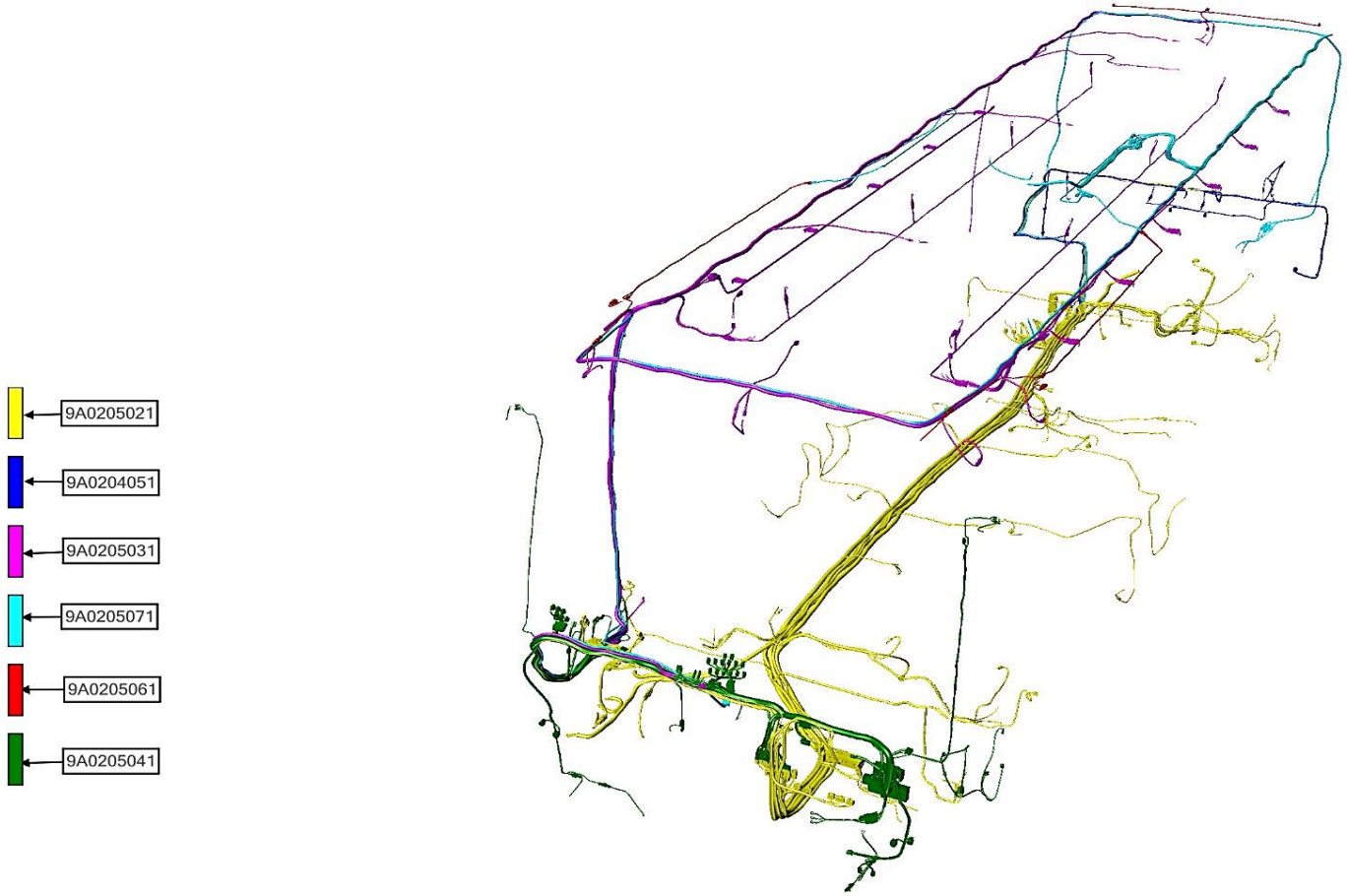

NAME_ASSB	CODE_PART NO	NAME	QTY
CONDUCTOR WIRE SYSTEM	9A0205021	CHASSIS ELECTRICAL HARNESS - ASSY	1
	9A0205031	HEADLINING ELECTRICAL HARNESS - ASS	1
	9A0205061	SPOILER ELECTRICAL HARNESS	1
	9A0205041	DASHBOARD ELECTRICAL HARNESS - ASS	1
	9A0205071	A/C ELECTRICAL HARNESS	1
	9A0204051	REAR ELECTRICAL HARNESS - ASSY	1

NAME_ASSB	CODE_PART NO	NAME	QTY
CONDUCTOR WIRE SYSTEM			

NAME_ASSB	CODE_PART NO	NAME	QTY
CHASSIS ELECTRICAL HARNESS - ASSY	CNA6840Y-3724028	ABS WIRE	1
	CNA6860K-3724180	ENGINE ELECTRIC CONTROL UNIT WIRE	1
	9B0105011	CHASSIS WIRE	1
	CNA6860K-3724360	STARTOR WIRE	1
	CNA6860K-3724260	MASS ENGINE WIRE	1
	3510023002	DASHBOARD POWER WIRE	1
	CNA6860K-3724180	ENGINE WIRE	1

NAME_ASSB	CODE_PART NO	NAME	QTY
CHASSIS ELECTRICAL HARNESS - ASSY	CNA6860K-3724060	BATTERY WIRE	1

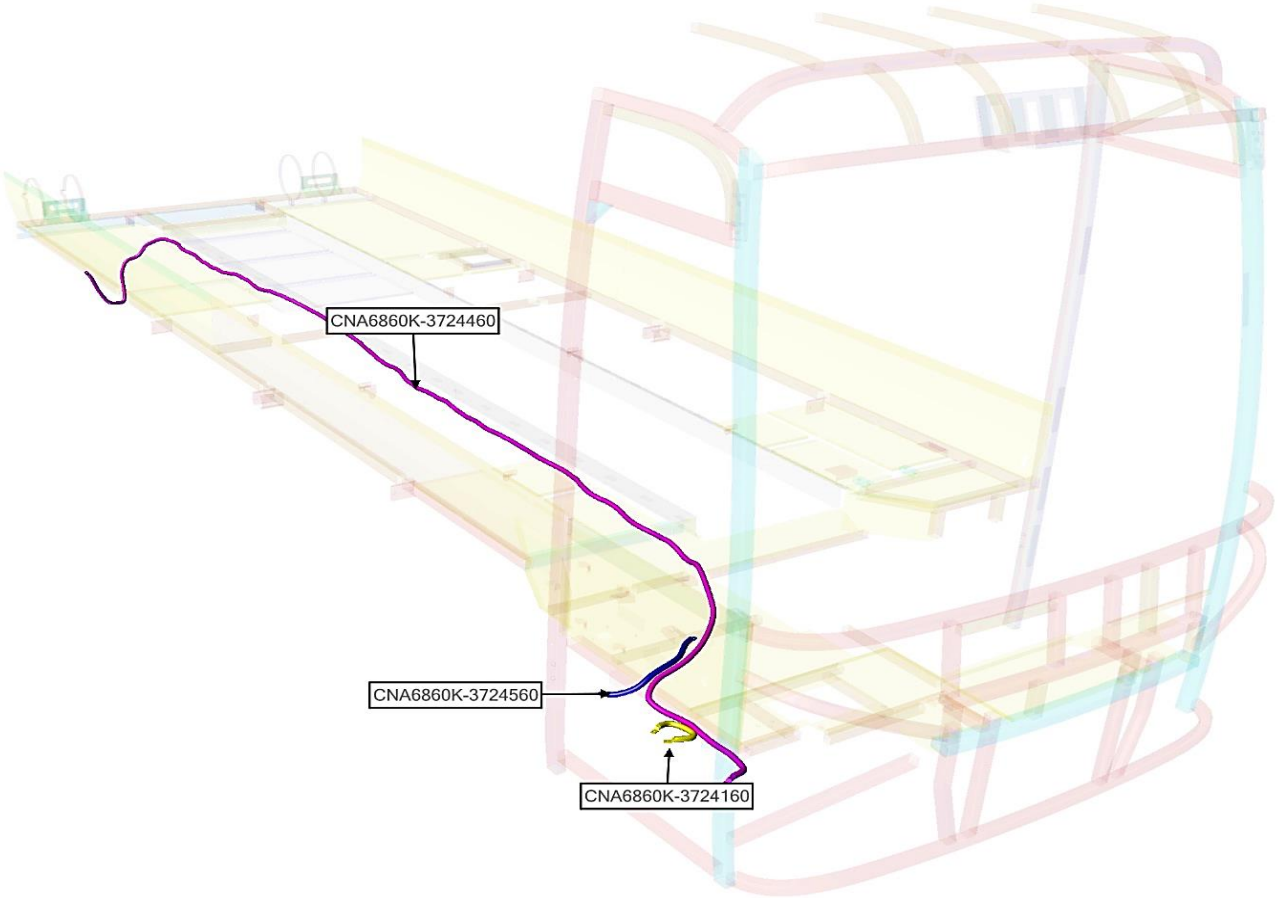

NAME_ASSB	CODE_PART NO	NAME	QTY
BATTERY WIRE	CNA6860K-3724160	CONNECTING WIRE	1
	CNA6860K-3724460	BATTERY POWER WIRE	1
	CNA6860K-3724560	CONNECTOR 610045	1

NAME_ASSB	CODE_PART NO	NAME	QTY
BATTERY WIRE			

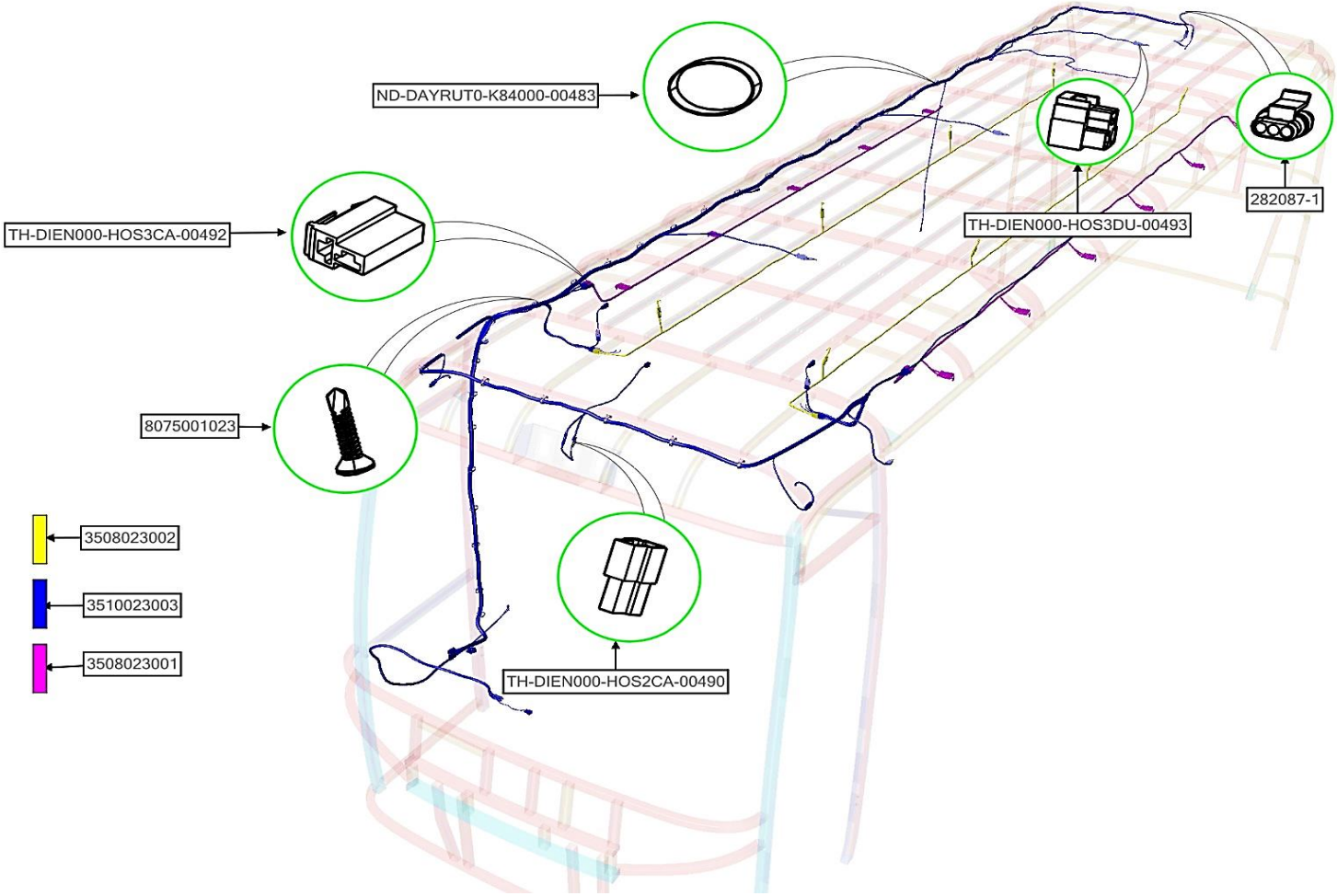

NAME_ASSB	CODE_PART NO	NAME	QTY
HEADLINING ELECTRICAL HARNESS - ASSY	282087-1	CONNECTOR 282087	1
	TH-DIEN000-HOS3DU-00493	CONNECTOR 610045	3
	TH-DIEN000-HOS2CA-00490	CONNECTOR 620042	9
	TH-DIEN000-HOS3CA-00492	CONNECTOR 620044	3
	ND-DAYRUT0-K84000-00483	CABLE TIE 08400	1
	3510023003	HEADLINING ELECTRICAL HARNESS	1
	3508023001	LAMP-SPEAKER WIRE - ASSY	1

NAME_ASSB	CODE_PART NO	NAME	QTY
HEADLINING ELECTRICAL HARNESS - ASSY	3508023002	LUGGAGES RACK LIGHTS WIRE	1
	TH-DIEN000-HOS3CA-00492	TERMINAL ST740255-1	30
	8075001023	CREW 0420	1

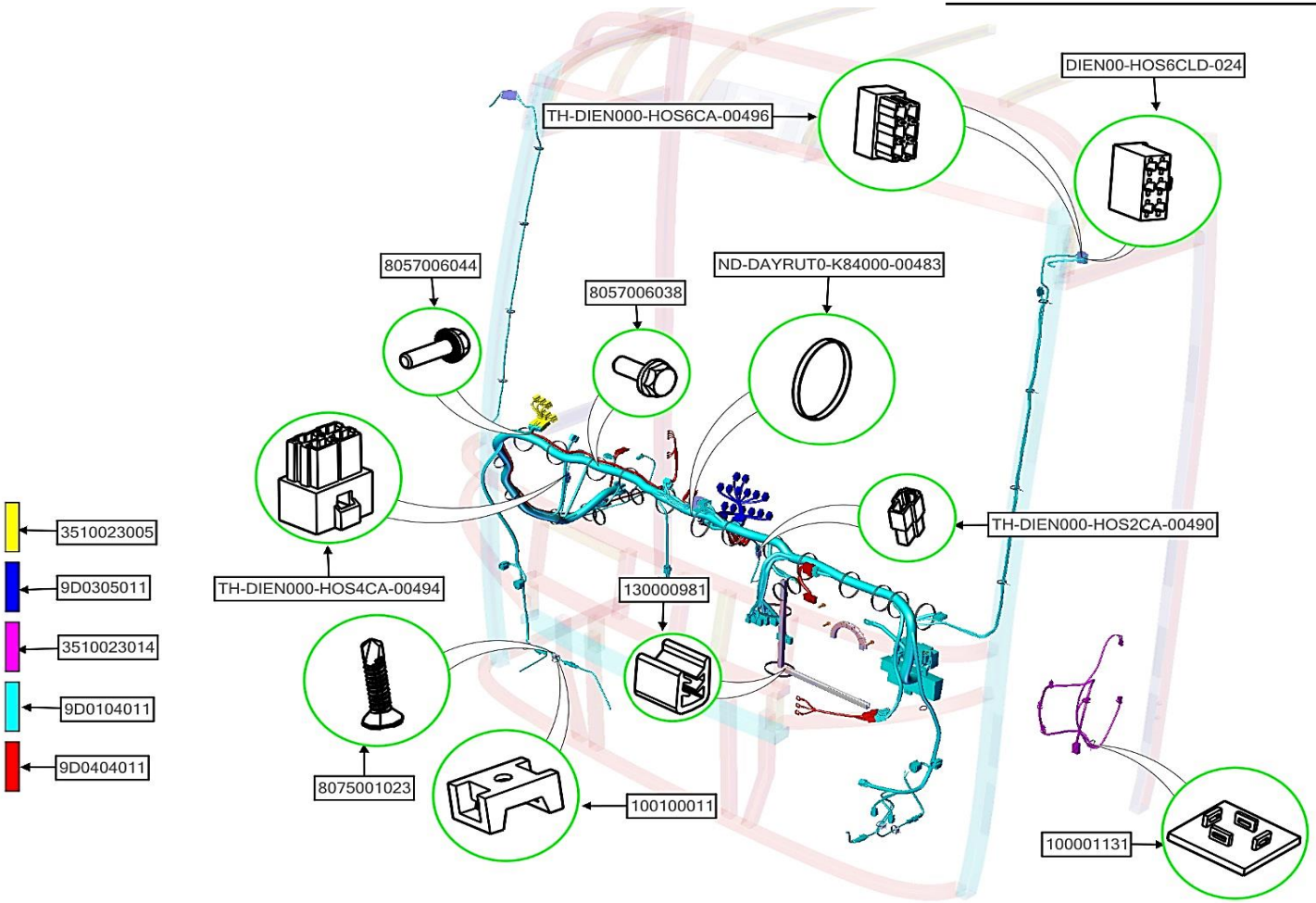

NAME_ASSB	CODE_PART NO	NAME	QTY
DASHBOARD ELECTRICAL HARNESS - ASSY	8057006038	BOLT 06015100	1
	8057006044	BOLT 06020100	8
	DIEN00-HOS6CLD-024	CONNECTOR 610049	2
	TH-DIEN000-HOS2CA-00490	CONNECTOR 620042	1
	TH-DIEN000-HOS4CA-00494	CONNECTOR 620046	1
	TH-DIEN000-HOS6CA-00496	CONNECTOR 620048	4
	ND-DAYRUT0-K84000-00483	CABLE TIE 08400	1
	100001131	MOUNTING	1

NAME_ASSB	CODE_PART NO	NAME	QTY
DASHBOARD ELECTRICAL HARNESS - ASSY	3510023005	RIGHT SWITCH WIRE	1
	9D0305011	LEFT SWITCH WIRE	1
	9D0104011	DASHBOARD WIRE	1
	9D0404011	INTERGRATED DASHBOARD WIRE	1
	3510023014	CONTROLING DOOR WIRE	1
	130000981	WEATHERSTRIP	1
	8075001023	CREW 0420	1
	100100011	MOUNTING	1

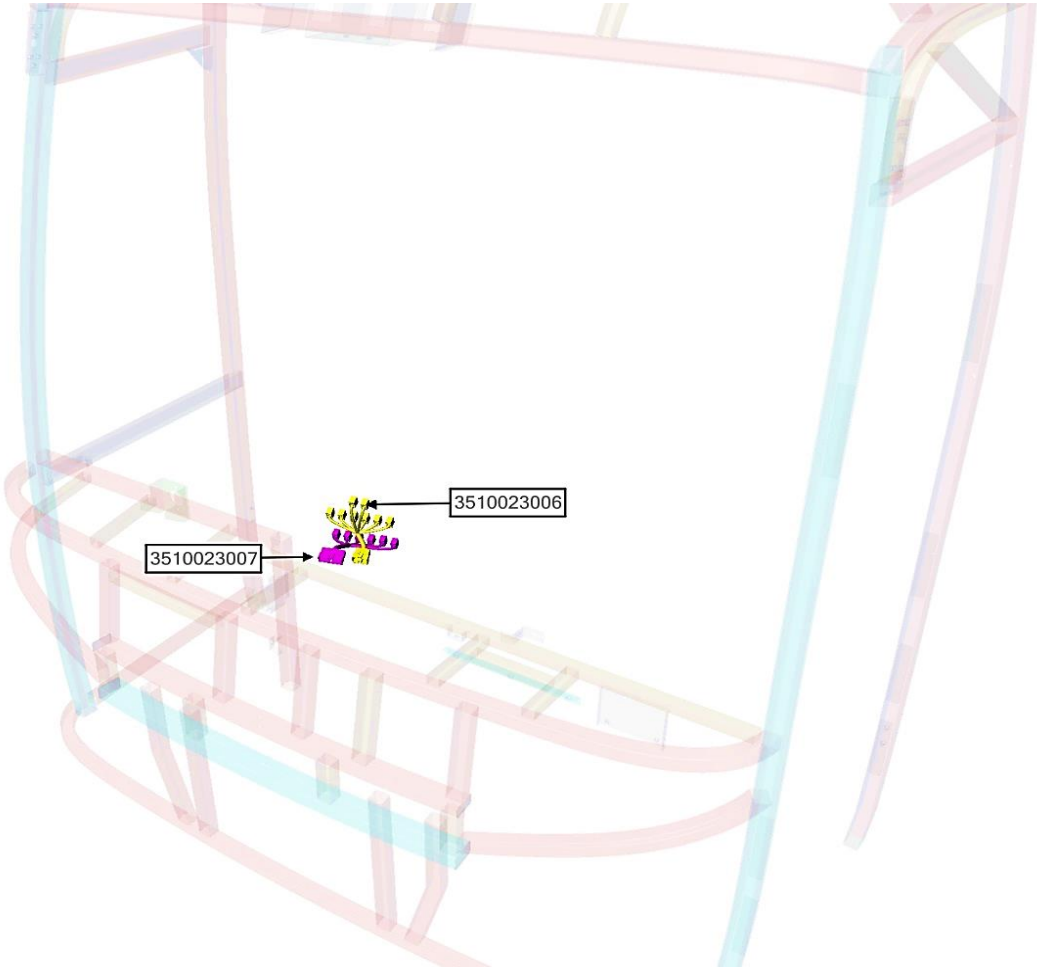

NAME_ASSB	CODE_PART NO	NAME	QTY
LEFT SWITCH WIRE	3510023007	LEFT SWITCH WIRE 2	1
	3510023006	LEFT SWITCH WIRE 1	1

NAME_ASSB	CODE_PART NO	NAME	QTY
LEFT SWITCH WIRE			

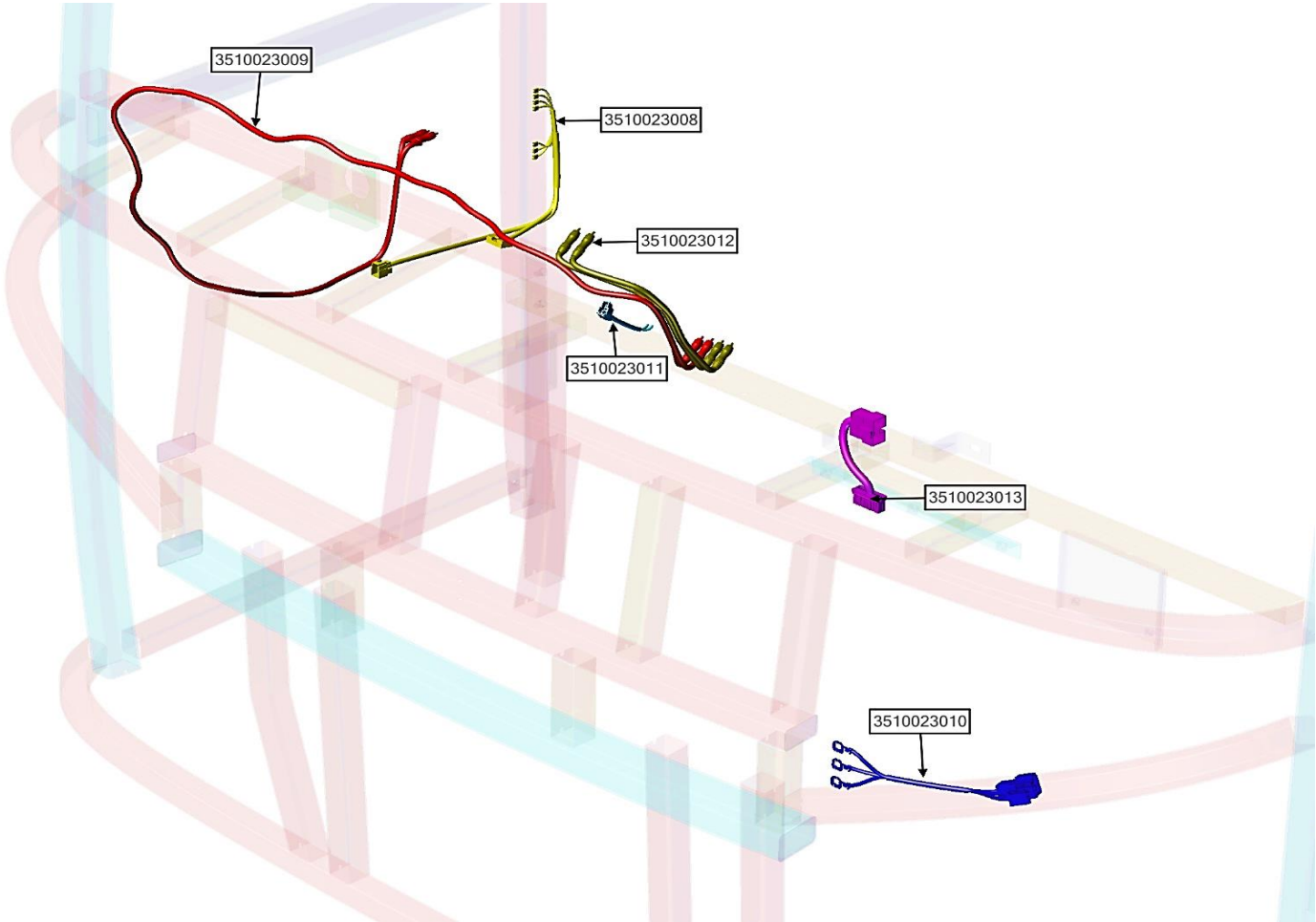

NAME_ASSB	CODE_PART NO	NAME	QTY
INTERGRATED DASHBOARD WIRE	3510023012	MIXER SIGNAL WIRE	1
	3510023009	AMPLIFIER SIGNAL WIRE	1
	3510023010	TRANSFORMER WIRE	1
	3510023013	RKE WIRE	1
	3510023011	CONNECTING MIXER WIRE	1
	3510023008	AMPLIFIER WIRE	1

NAME_ASSB	CODE_PART NO	NAME	QTY
INTERGRATED DASHBOARD WIRE			

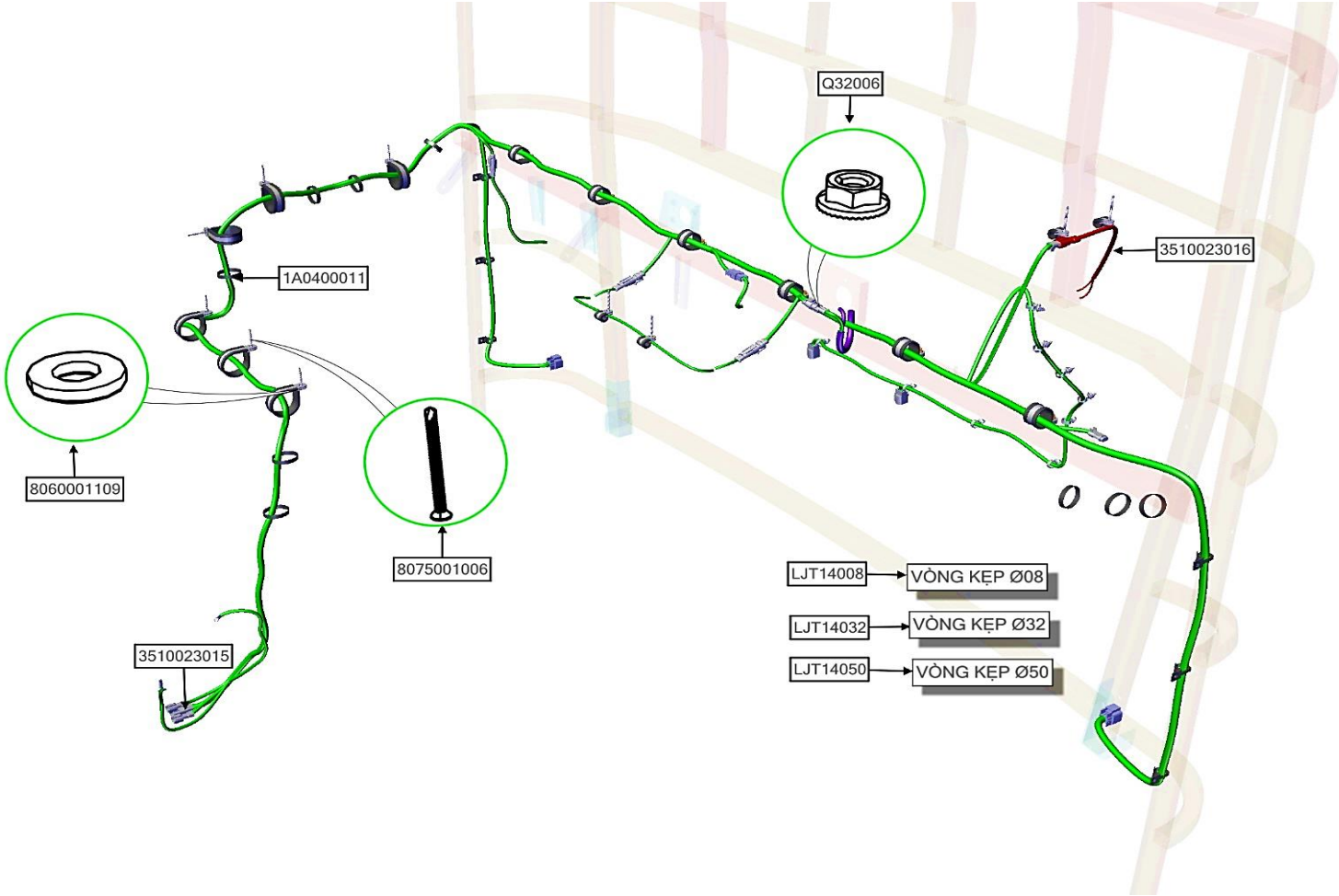

NAME_ASSB	CODE_PART NO	NAME	QTY
REAR ELECTRICAL HARNESS - ASSY	1A0400011	CABLE TIE 08400	9
	3510023016	ENGINE FLAP SWITCH WIRE	1
	3510023015	REAR ELECTRICAL HARNESS	1
	8075001006	CREW 0450	10
	LJT14008	CLAIM Ø08	4
	LJT14032	CLAIM Ø32	6
	LJT14050	CLAIM Ø50	6

NAME_ASSB	CODE_PART NO	NAME	QTY
REAR ELECTRICAL HARNESS - ASSY	8060001109	WASHER Ø06	6
	Q32006	NUT 06100	6

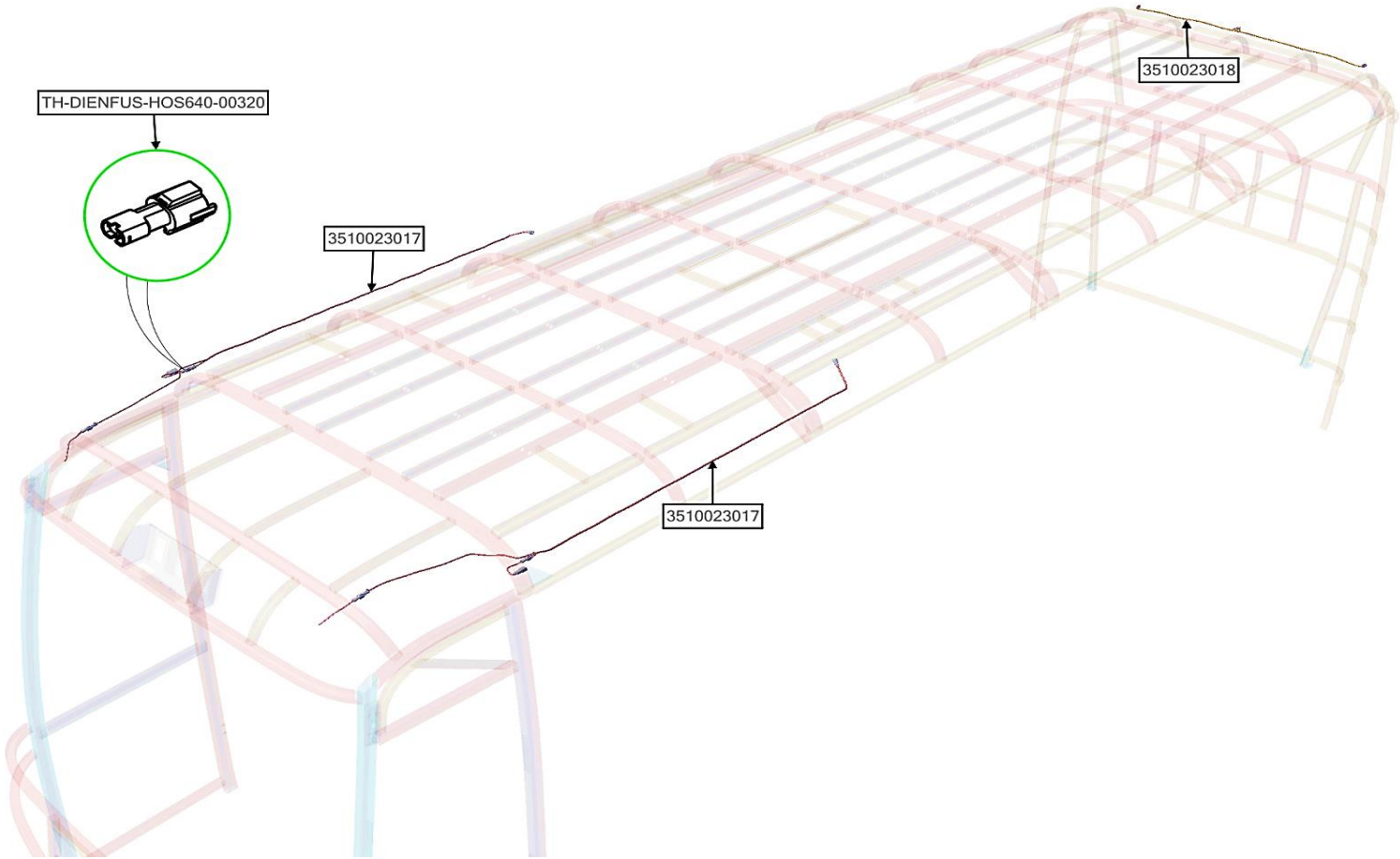

NAME_ASSB	CODE_PART NO	NAME	QTY
SPOILER ELECTRICAL HARNESS	TH-DIENFUS-HOS640-00320	CONNECTOR 640322-5	2
	3510023017	SPOILER WIRE	2
	3510023018	REAR SPOILER WIRE	1

NAME_ASSB	CODE_PART NO	NAME	QTY
SPOILER ELECTRICAL HARNESS			

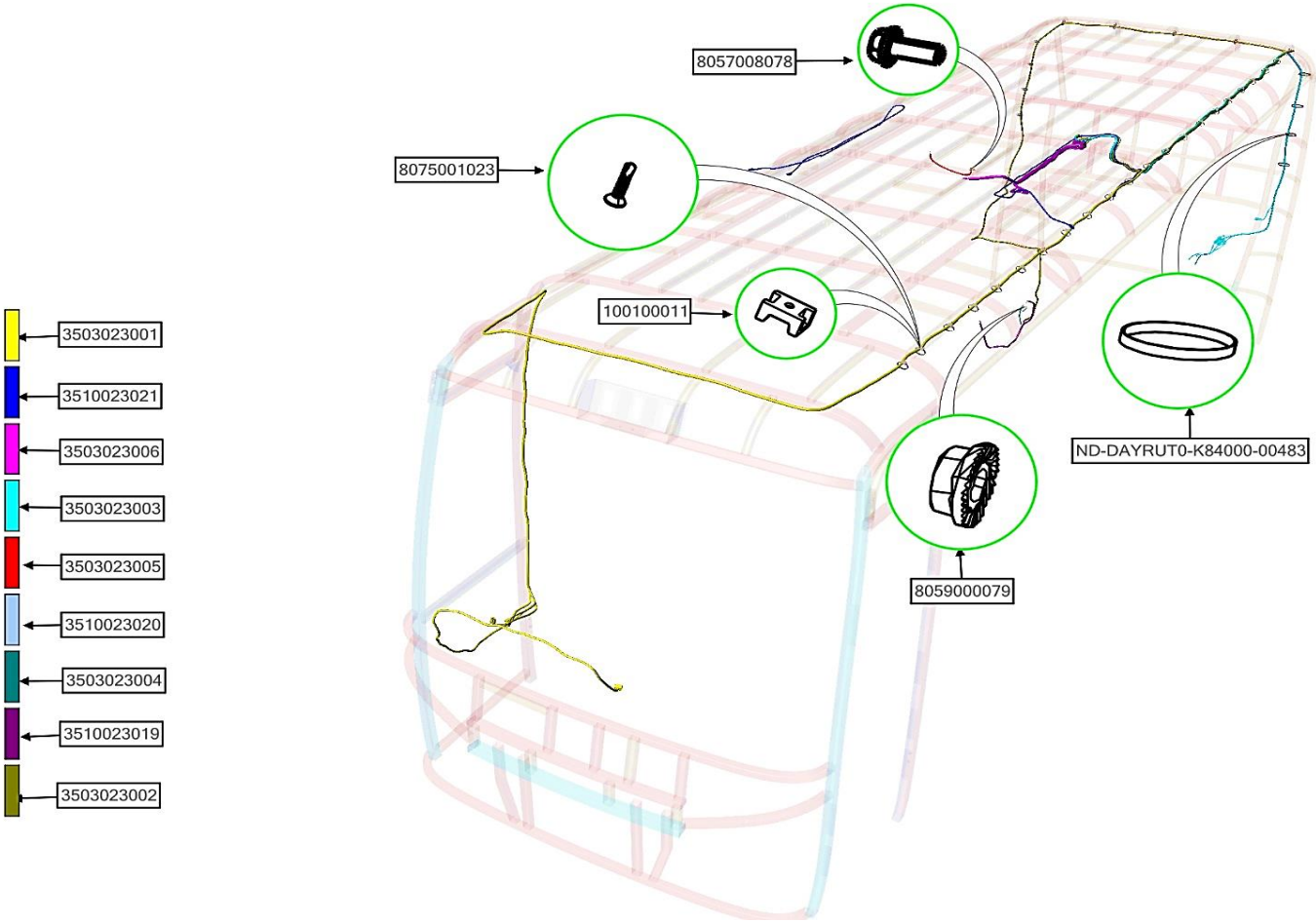

NAME_ASSB	CODE_PART NO	NAME	QTY
A/C ELECTRICAL HARNESS	8057008078	BOLT 08020125	1
	ND-DAYRUT0-K84000-00483	CABLE TIE 08400	1
	3503023001	A/C SWITCH WIRE	1
	3503023003	CONNECTING COMPRESSOR WIRE	1
	3503023006	A/C CONNECTING ELECTRICAL HARNESS	1
	3503023005	A/C MASS WIRE	1
	3510023020	MASS RELAY WIRE	1

NAME_ASSB	CODE_PART NO	NAME	QTY
A/C ELECTRICAL HARNESS	3510023019	A/C FUSE POWER WIRE	1
	3503023002	A/C POWER WIRE	1
	3503023004	FUSE RELAY WIRE	1
	3510023021	A/C LAMP WIRE	1
	8075001023	CREW 0420	1
	8059000079	NUT 05100	1
	100100011	MOUNTING	1

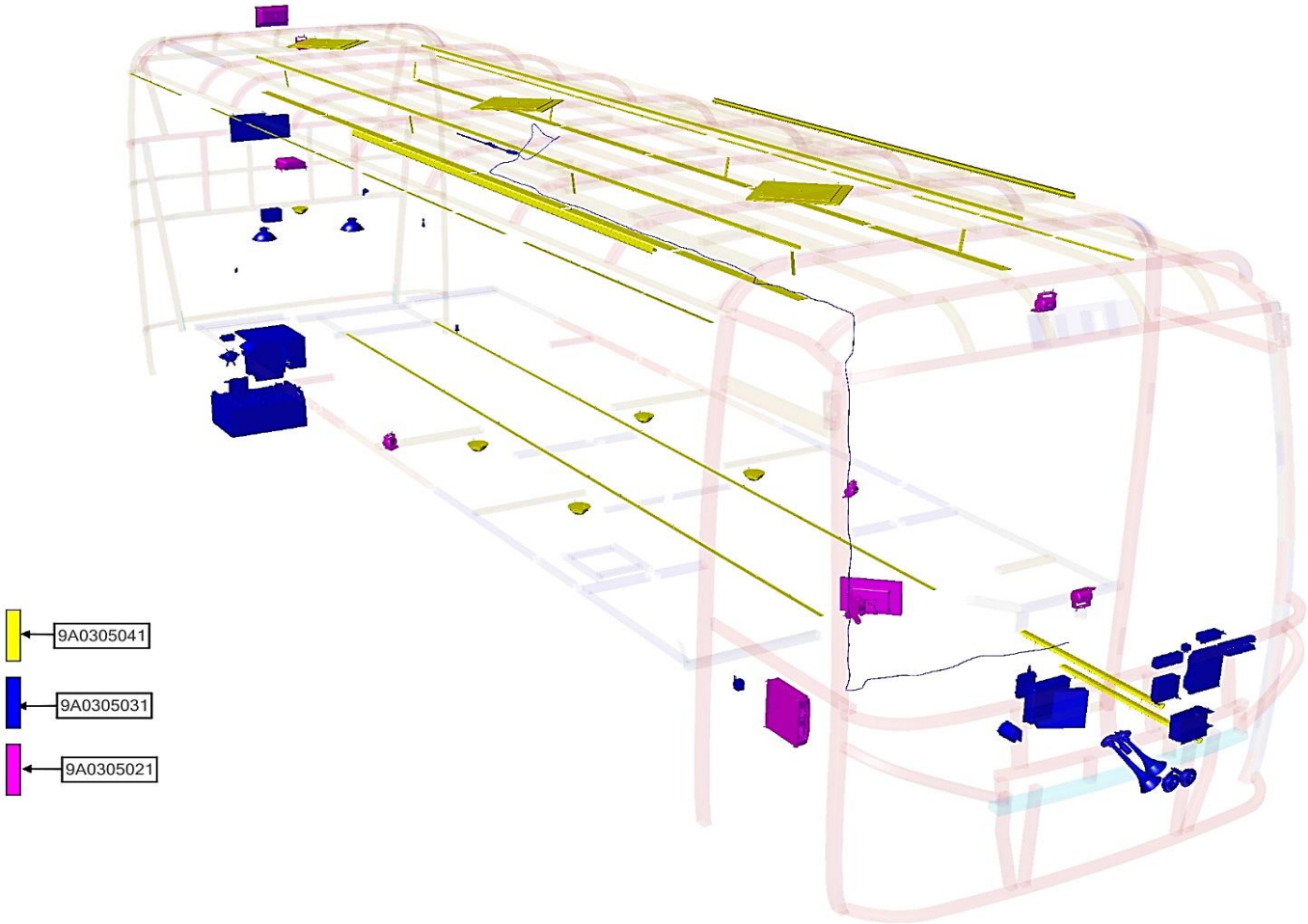

NAME_ASSB	CODE_PART NO	NAME	QTY
ELECTRICAL DEVICE	9A0305041	HEADLIGHT SYSTEM	1
	9A0305031	SAFETY AND CONVENIENCE SYSTEM	1
	9A0305021	SOUND, IMAGE SYSTEM	1

NAME_ASSB	CODE_PART NO	NAME	QTY
ELECTRICAL DEVICE			

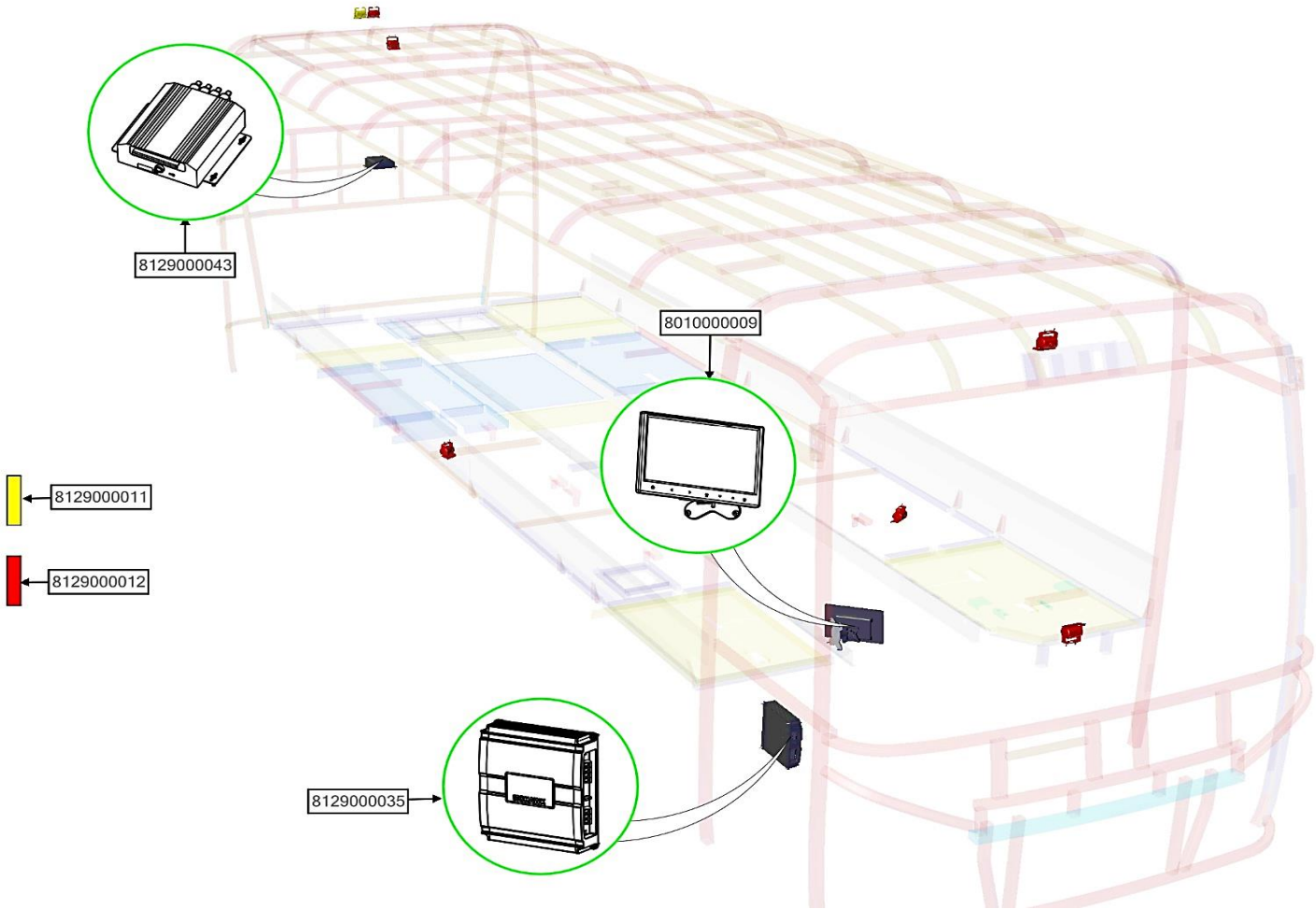

NAME_ASSB	CODE_PART NO	NAME	QTY
SOUND, IMAGE SYSTEM	8129000035	ÂM LI	1
	8129000012	CAMERA QUAN SÁT	2
	8010000009	MÀN HÌNH 9INCH	1
	8129000043	ĐẦU THU	1
	8129000011	CAMERA LÙI	1

NAME_ASSB	CODE_PART NO	NAME	QTY
SOUND, IMAGE SYSTEM			

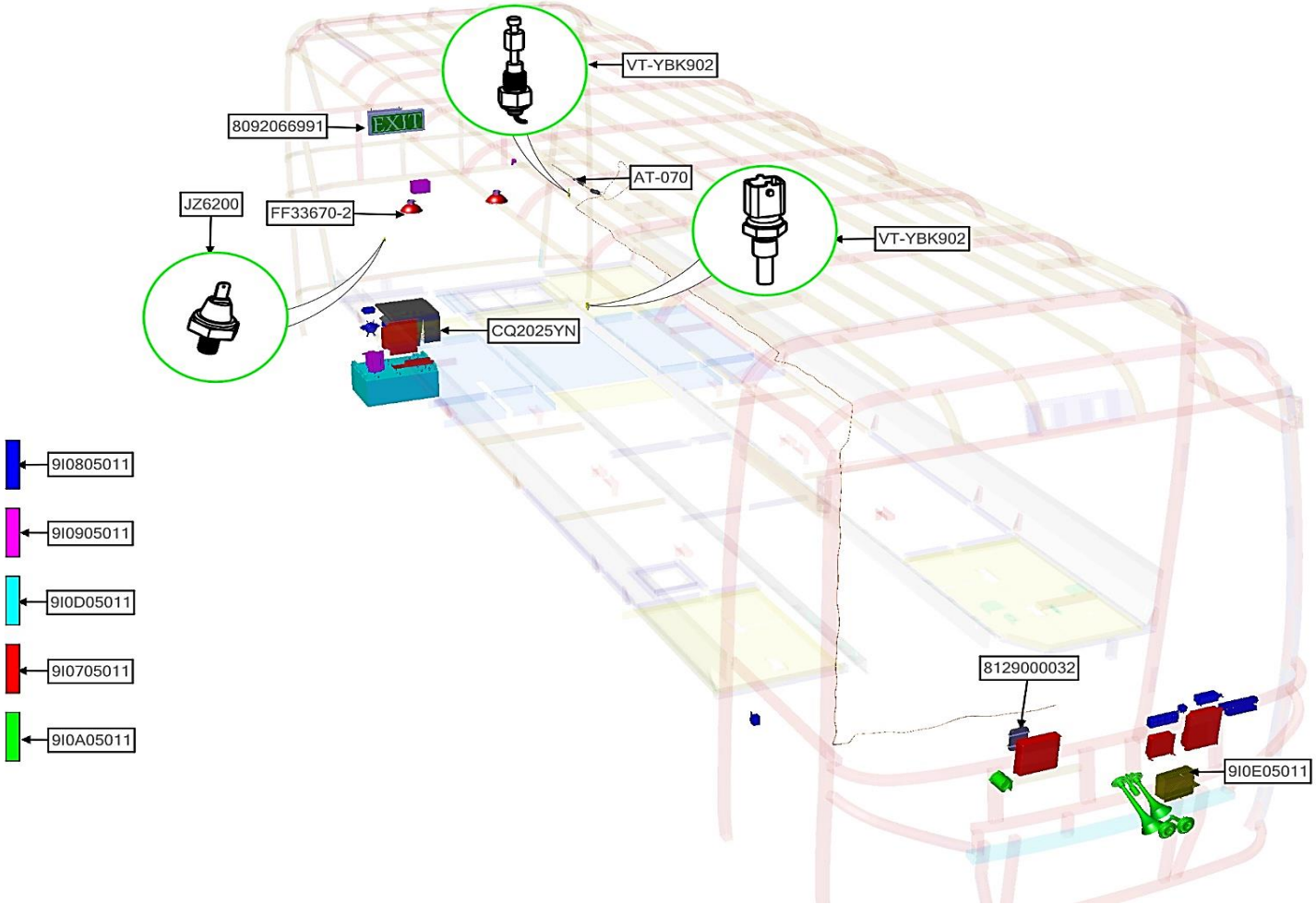

NAME_ASSB	CODE_PART NO	NAME	QTY
SAFETY AND CONVENIENCE SYSTEM	AT-070	ANTENNA	1
	JZ6200	AIR FILTER SENSOR	1
	FF33670-2	FIRE FIGHTING DEVICE	4
	8129000032	HARD DISK 1TB	1
	9I0805011	FUSE AND RELAY	1
	9I0E05011	TRANSFORMER ASSY	1
	8092066991	EXIT	

NAME_ASSB	CODE_PART NO	NAME	QTY
SAFETY AND CONVENIENCE SYSTEM	9I0905011	SWITCHS	1
	9I0705011	SIGNAL PROCESSOR	1
	9I0A05011	HORN	1
	9I0D05011	BATTERY - ASSY	1
	CQ2025YN	ELECTRICAL BOX	1
	VT-YBK902	TEMPERATURE SENSOR	1
	VT-YBK902	AIR FLOW SENSOR	1

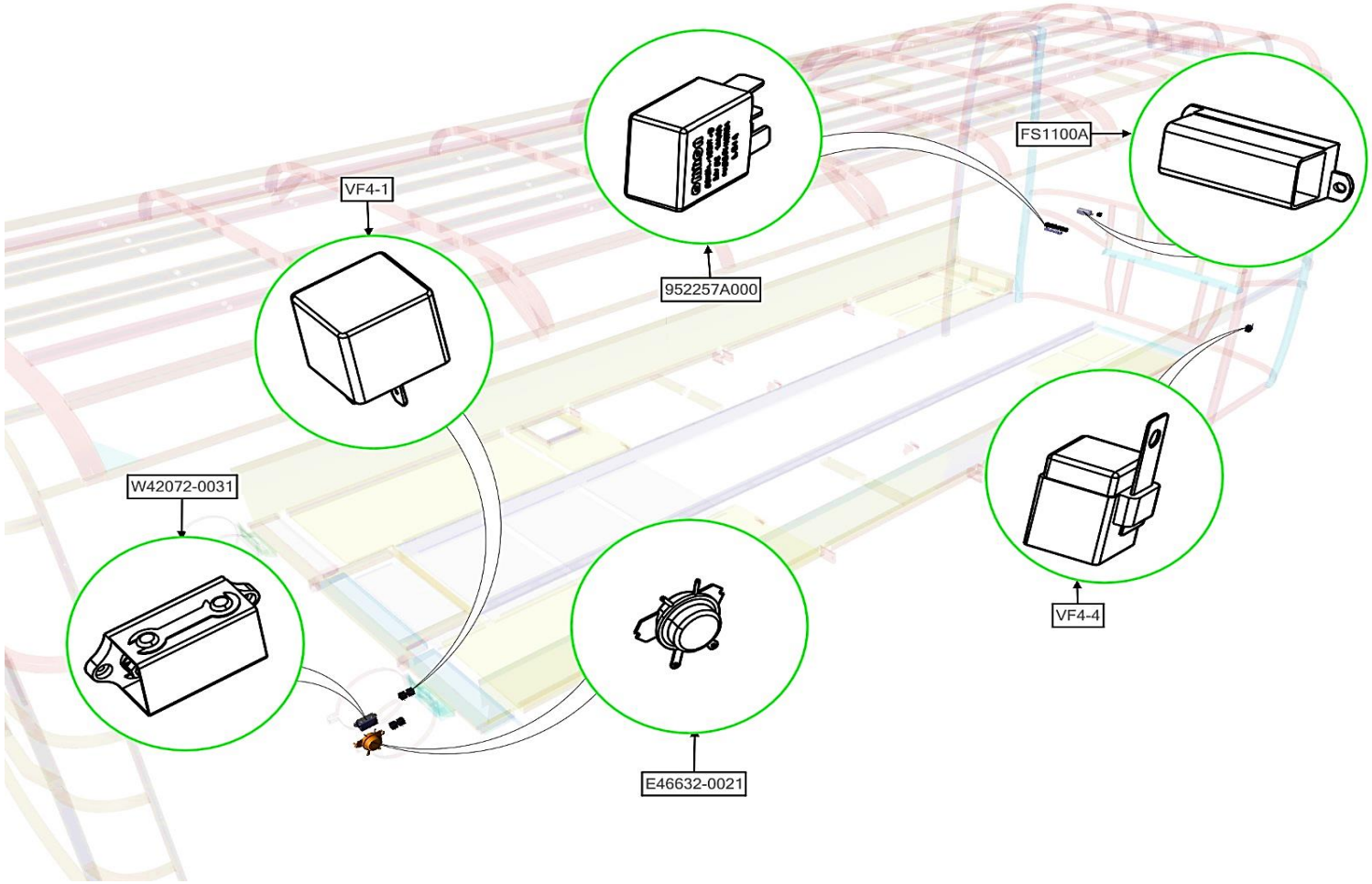

NAME_ASSB	CODE_PART NO	NAME	QTY
FUSE AND RELAY	FS1100A	FUSE 100A	1
	W42072-0031	FUSE 100A	1
	VF4-1	RELAY A	11
	952257A000	RELAY B	8
	VF4-4	RELAY C	1
	E46632-0021	A/C RELAY	1

NAME_ASSB	CODE_PART NO	NAME	QTY
FUSE AND RELAY			

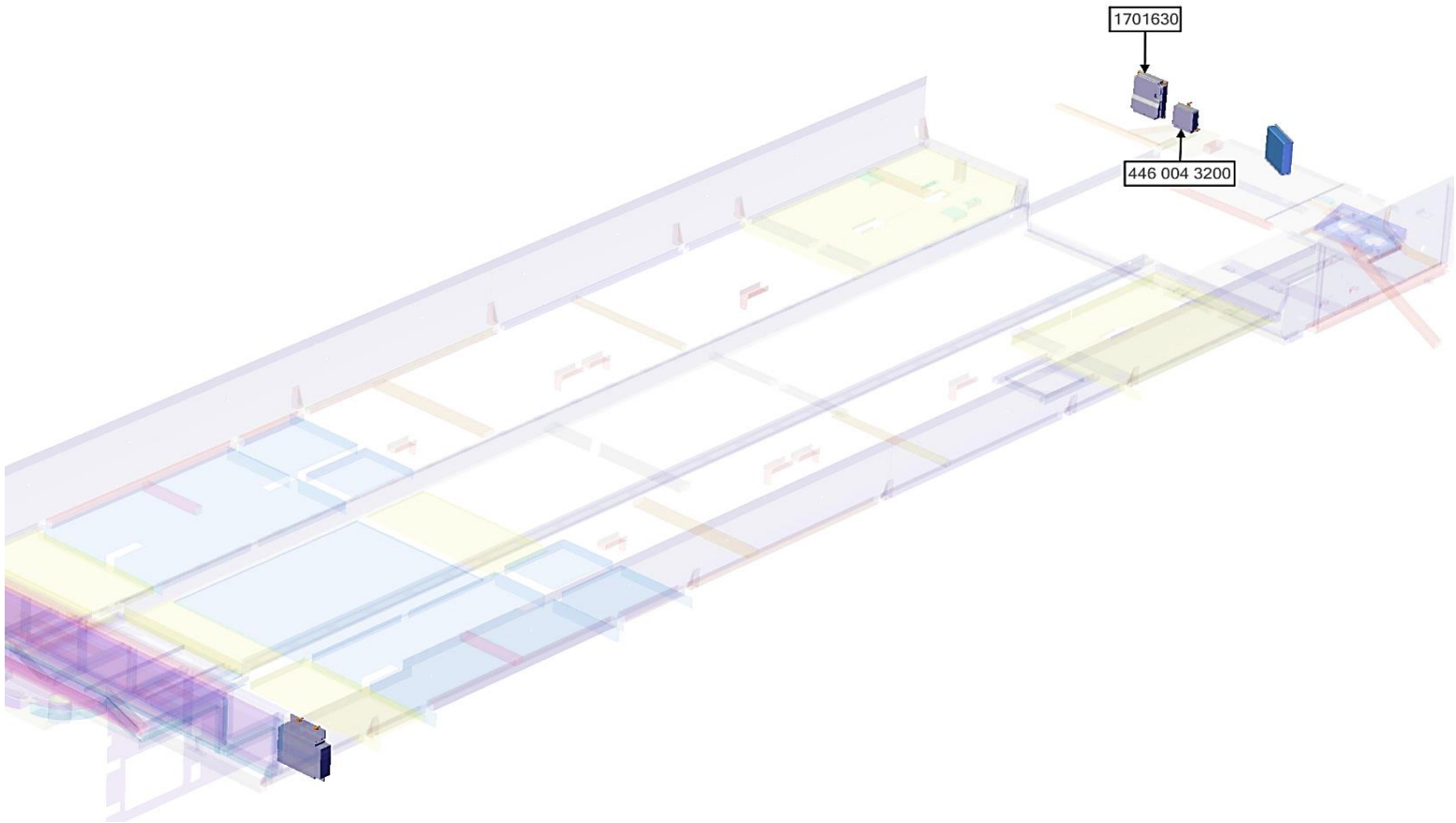

NAME_ASSB	CODE_PART NO	NAME	QTY
SIGNAL PROCESSOR	446 004 3200	HỘP XỬ LÝ ABS	1
	1701630	HỘP XỬ LÝ TRUNG TÂM	1

NAME_ASSB	CODE_PART NO	NAME	QTY
SIGNAL PROCESSOR			

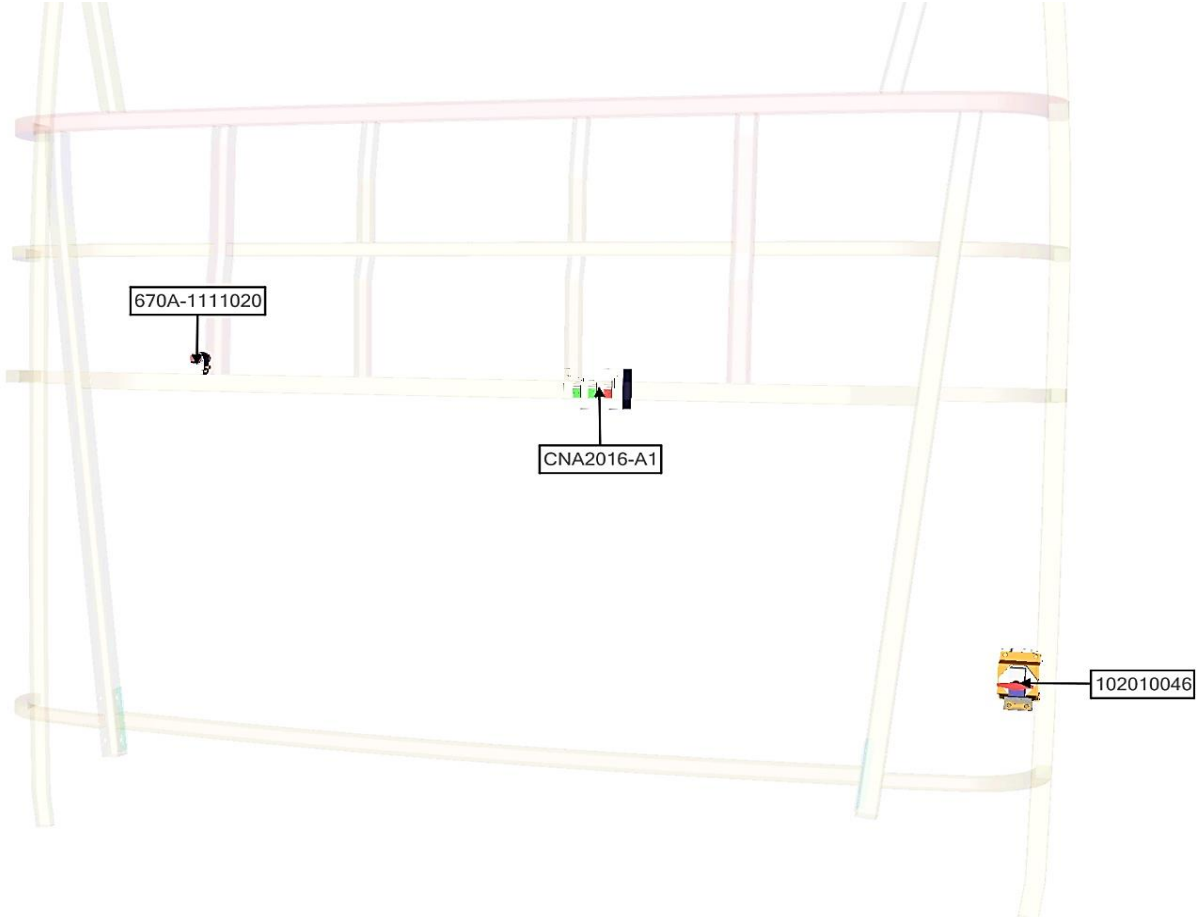

NAME_ASSB	CODE_PART NO	NAME	QTY
SWITCHS	102010046	POWER SWITCH	1
	CNA2016-A1	SUB-START SWITCH	1
	670A-1111020	LIGHT SWITCH	1

NAME_ASSB	CODE_PART NO	NAME	QTY
SWITCHS			

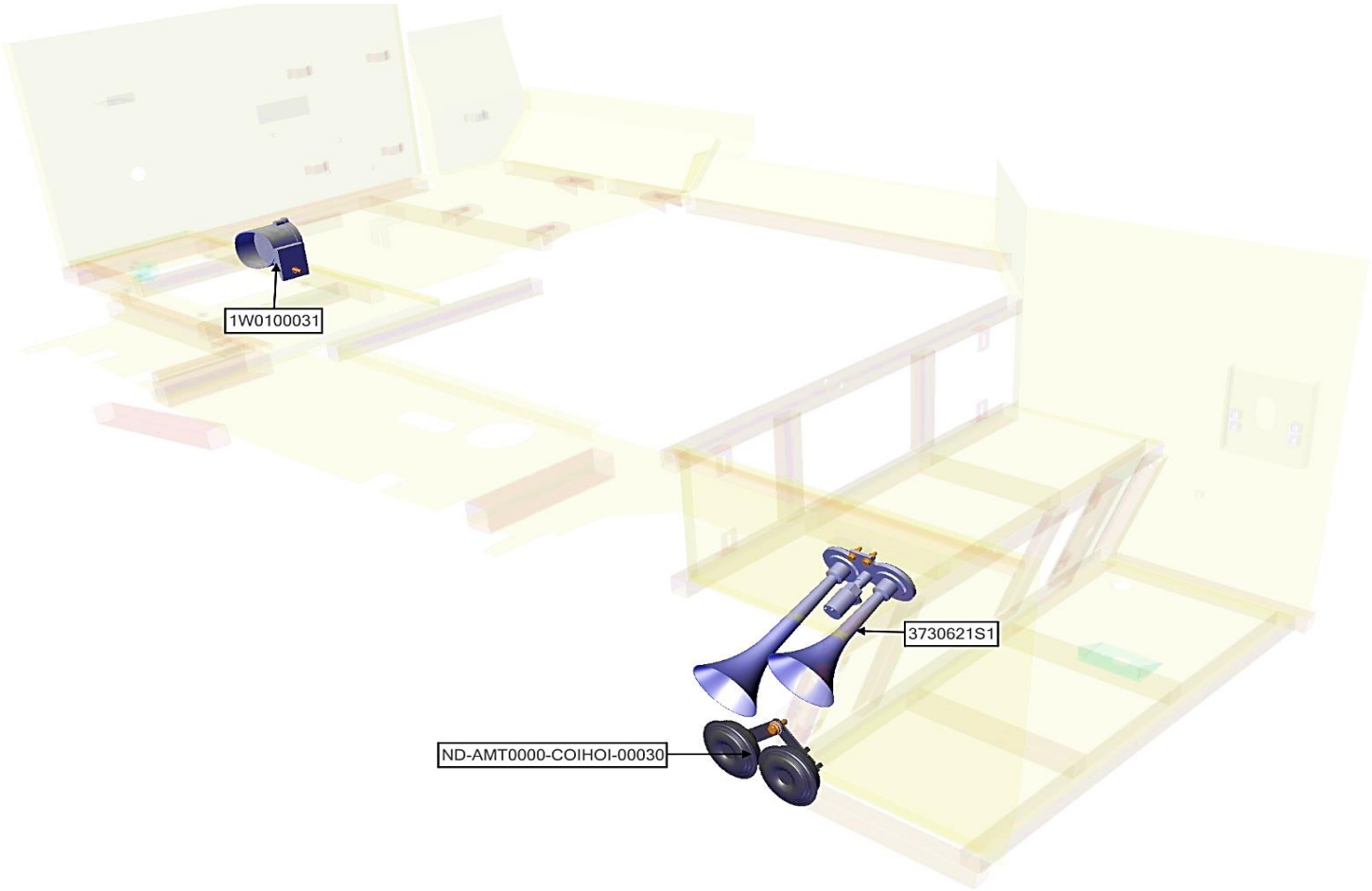

NAME_ASSB	CODE_PART NO	NAME	QTY
HORN	1W0100031	HORN	1
	3730621S1	AIR HORN	1
	ND-AMT0000-COIHOI-00030	ELECTRICAL HORN	2

NAME_ASSB	CODE_PART NO	NAME	QTY
HORN			

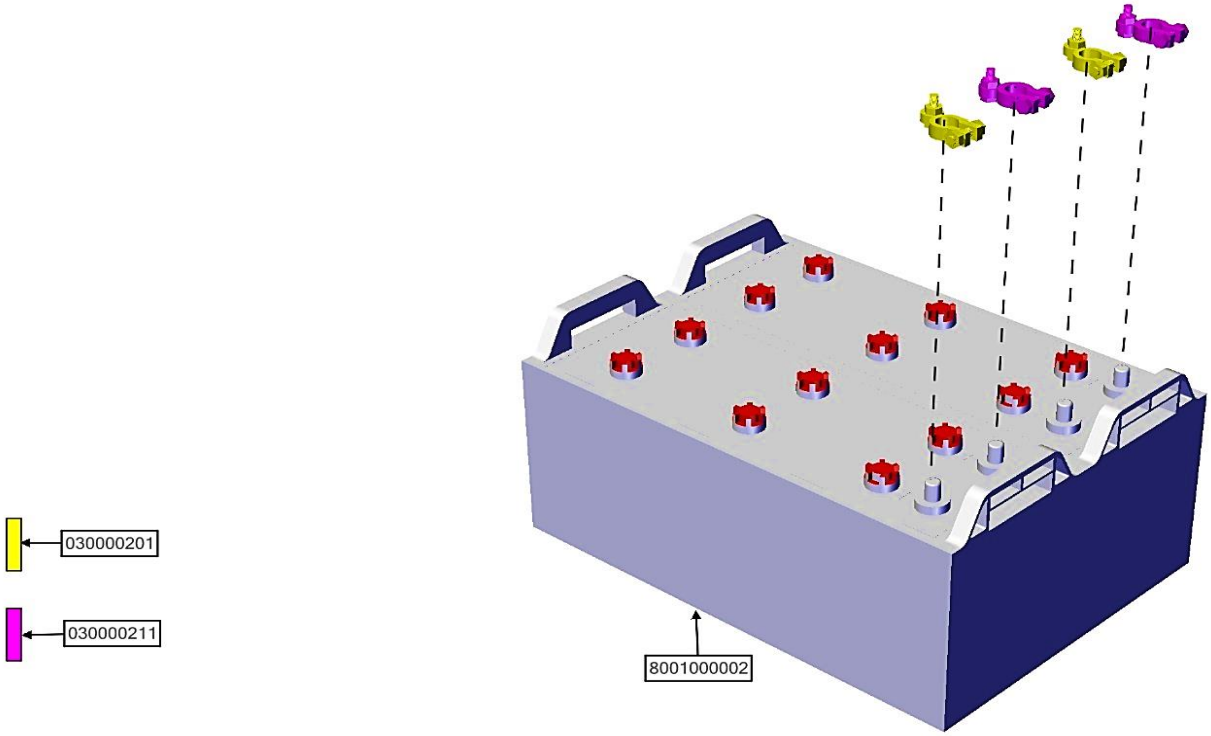

NAME_ASSB	CODE_PART NO	NAME	QTY
BATTERY - ASSY	30000201	BATTERY CLAMP N	2
	30000211	BATTERY CLAMP P	2
	8001000002	BATTERY	2

NAME_ASSB	CODE_PART NO	NAME	QTY
BATTERY - ASSY			

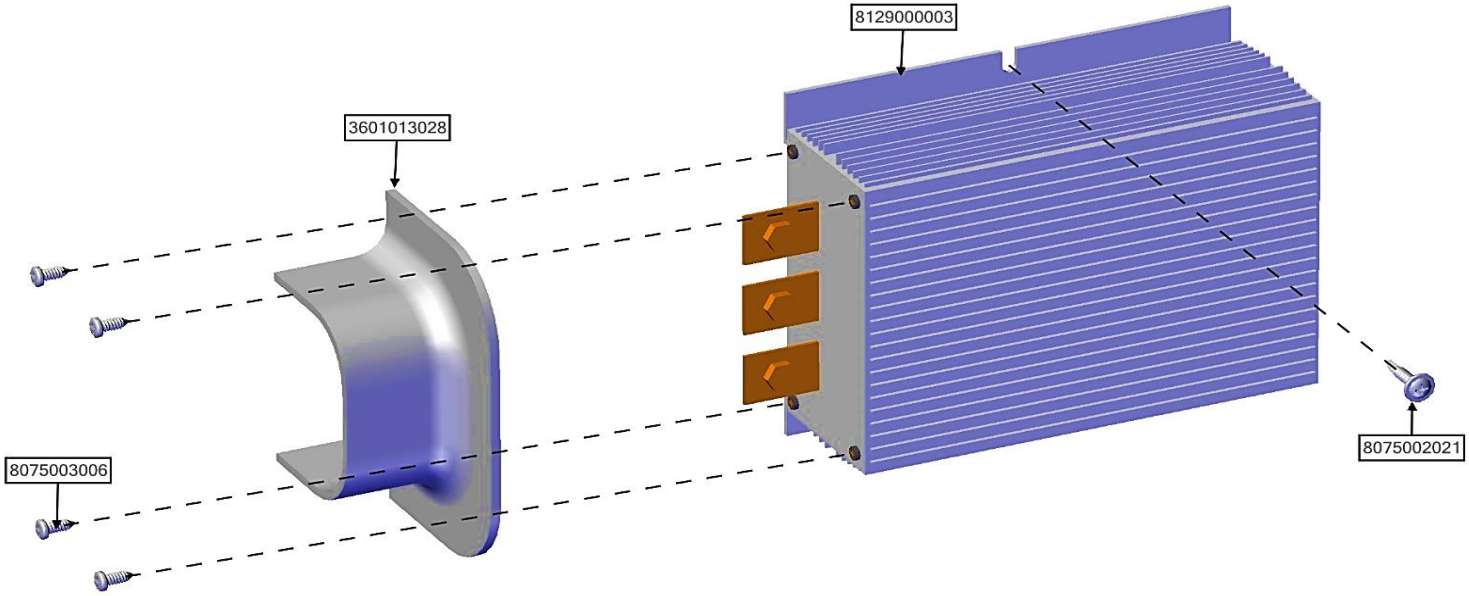

NAME_ASSB	CODE_PART NO	NAME	QTY
TRANSFORMER ASSY	8129000003	CREW 0410	4
	8075003006	CREW 0420	2
	8075002021	TRANSFORMER	1
	3601013028	TRANSFORMER COVER	1

NAME_ASSB	CODE_PART NO	NAME	QTY
TRANSFORMER ASSY			

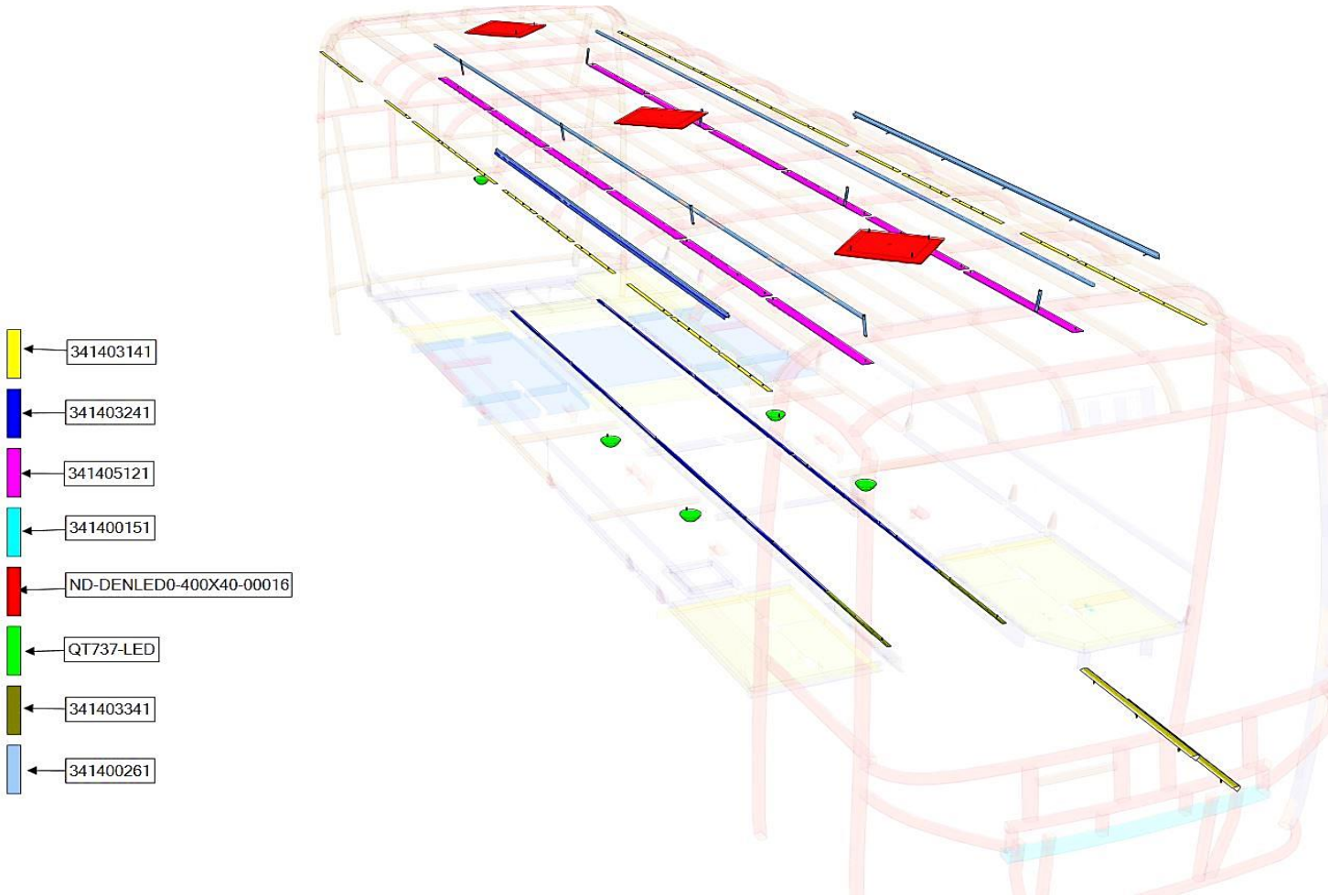

NAME_ASSB	CODE_PART NO	NAME	QTY
SOUND, IMAGE SYSTEM	341400151	LED 20X110 (BLUE)	8
	QT737-LED	LUGGAGES TRUNK LIGHTS	5
	341405121	LED 54X930	12
	341403241	LED 20X500	18
	341403341	LED 20X620	2

NAME_ASSB	CODE_PART NO	NAME	QTY
SOUND, IMAGE SYSTEM	341400261	LAMP	2
	341403141	LED 20X480	25
	ND-DENLED0-400X40-00016	CEILINGLAMP 400X400	3

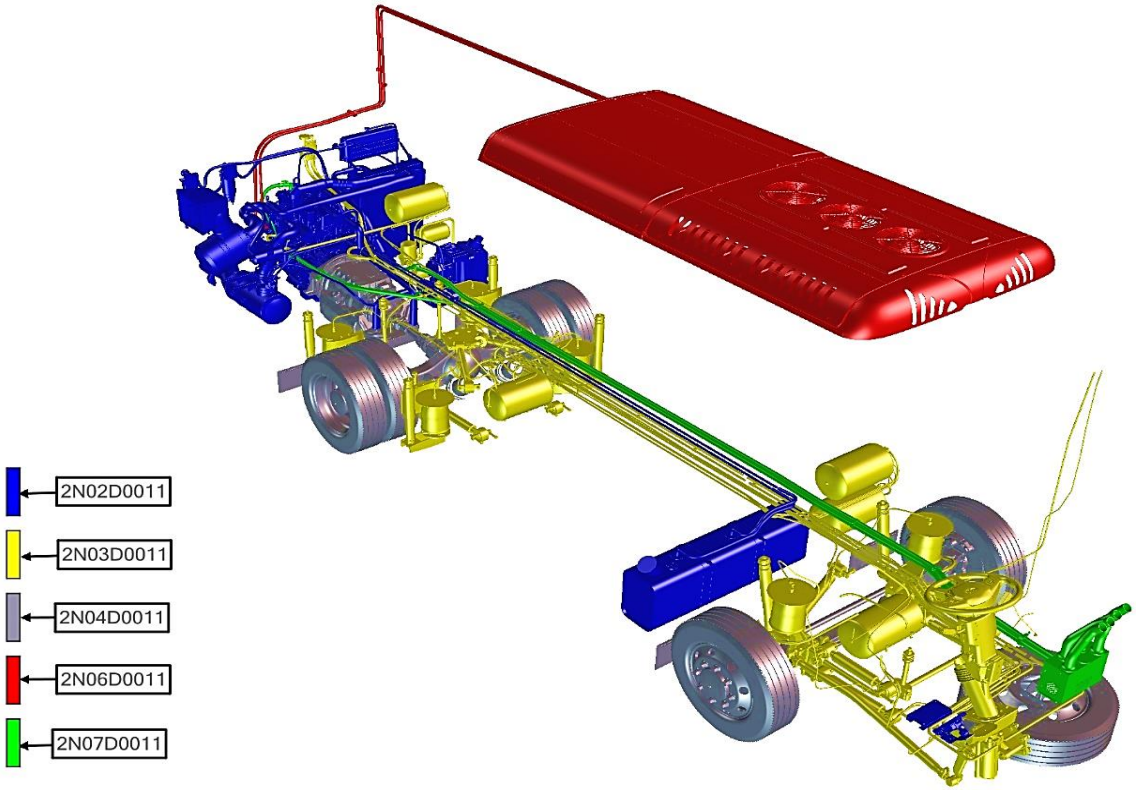

NAME_ASSB	CODE_PART NO	NAME	QTY
BARE CHASSIS	2N02D0011	DIESEL ENGINE - ASSY	1
	2N03D0011	CHASSIS FUNCTION SYSTEM	1
	2N04D0011	POWERTRAIN	1
	2N06D0011	AIR CONDITIONING SYSTEM	1
	2N07D0011	GLASS HEATING SYSTEM	1

NAME_ASSB	CODE_PART NO	NAME	QTY
BARE CHASSIS			

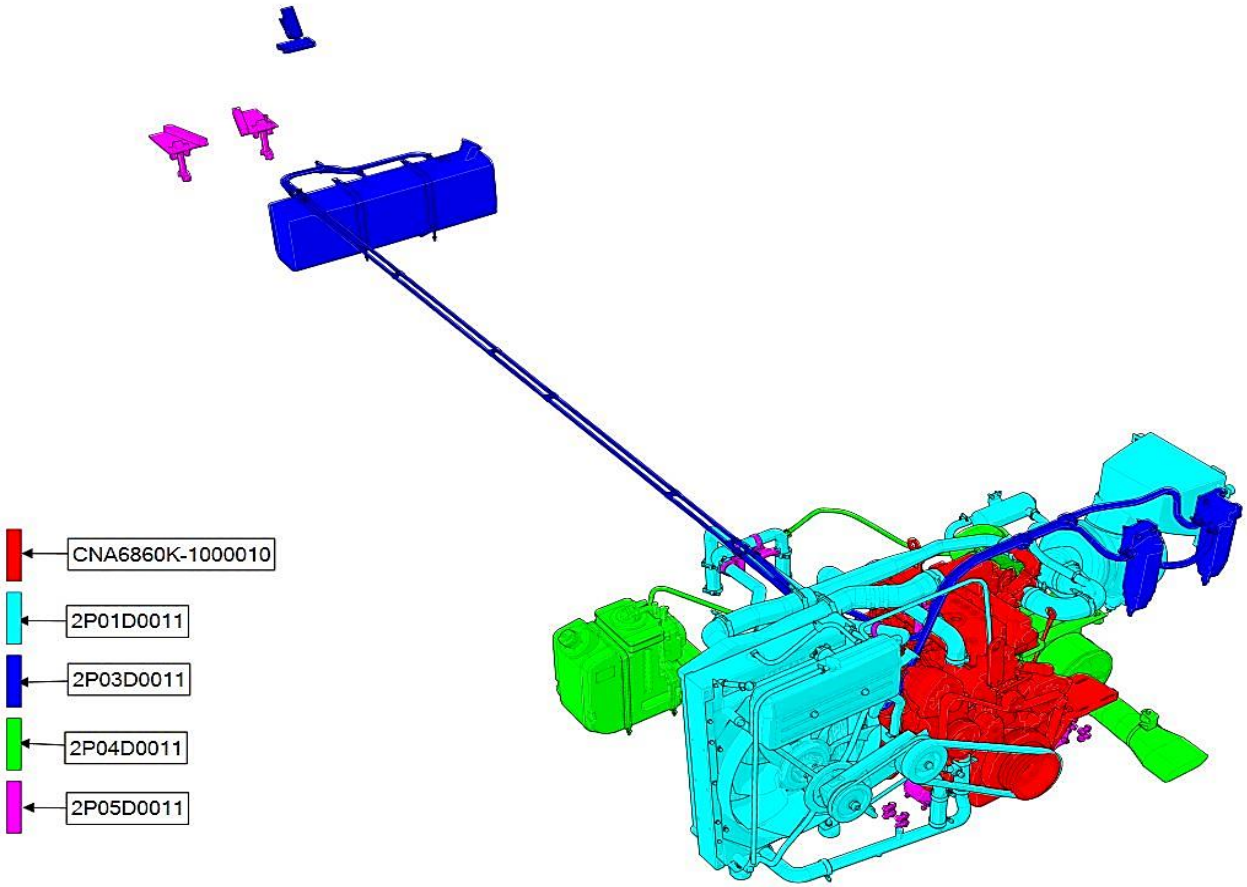

NAME_ASSB	CODE_PART NO	NAME	QTY
DIESEL ENGINE - ASSY	CNA6860K-1000010	ENGINE	1
	2P01D0011	COOLING SYSTEM	1
	2P03D0011	FUEL SYSTEM	1
	2P04D0011	EXHAUST AIR SYSTEM	1
	2P05D0011	MINOR ITEMS	1

NAME_ASSB	CODE_PART NO	NAME	QTY
DIESEL ENGINE - ASSY			

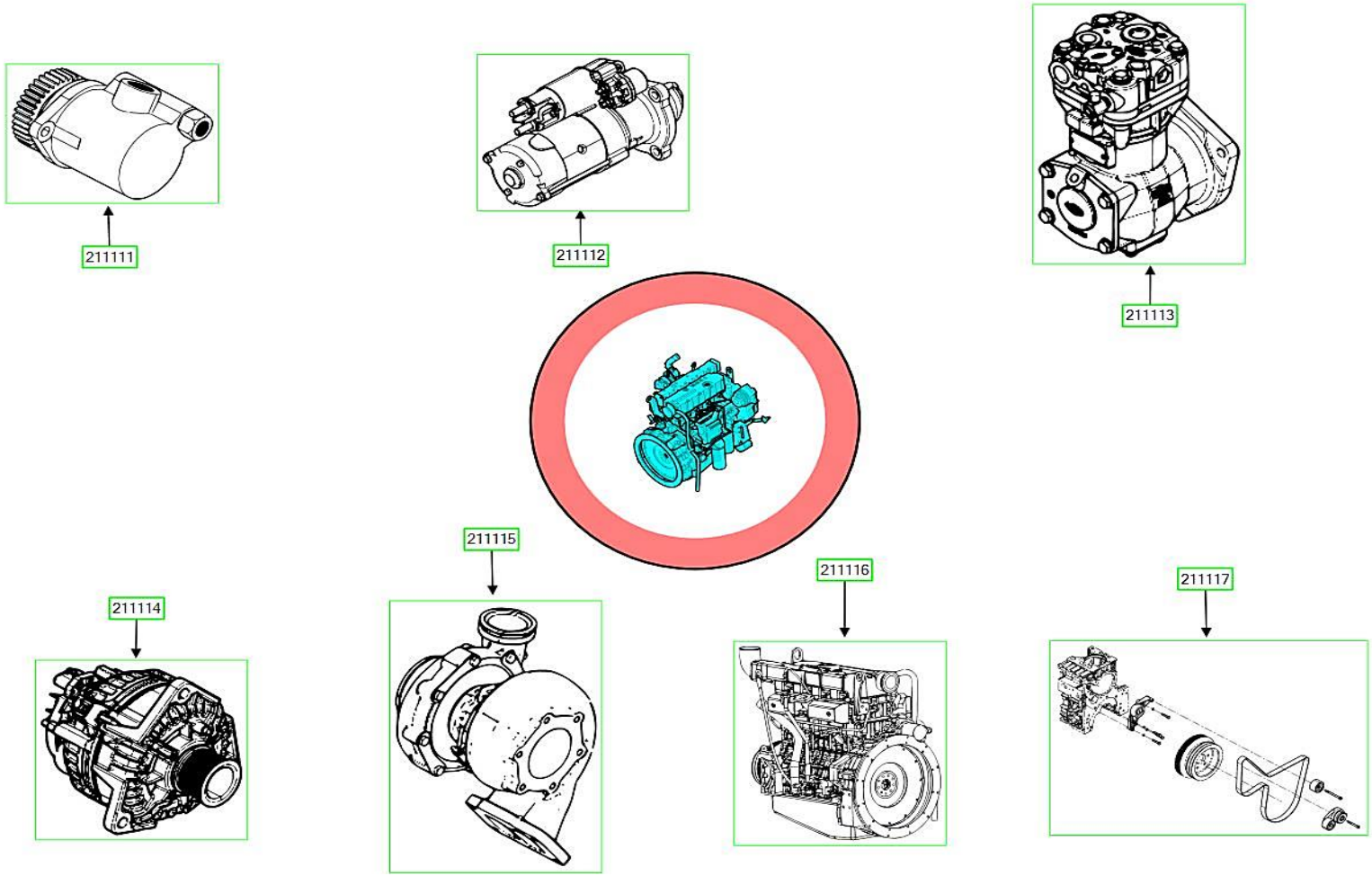

NAME_ASSB	CODE_PART NO	NAME	QTY
ENGINE	2111161	ENGINE ASSY	1
	2111162	VALVE SYSTEM	1
	2111163	FUEL SYSTEM	1
	2111164	INTAKE/EXHAUST SYSTEM	1
	2111165	COLLING SYSTEM	1
	2111166	SENSOR ELECTRIC SYSTEM	1
	2111167	LUBRICATION SYSTEM	1

NAME_ASSB	CODE_PART NO	NAME	QTY
ENGINE	2111168	MOTION GROUP	1
	2111169	FLYWHEEL GROUP	1

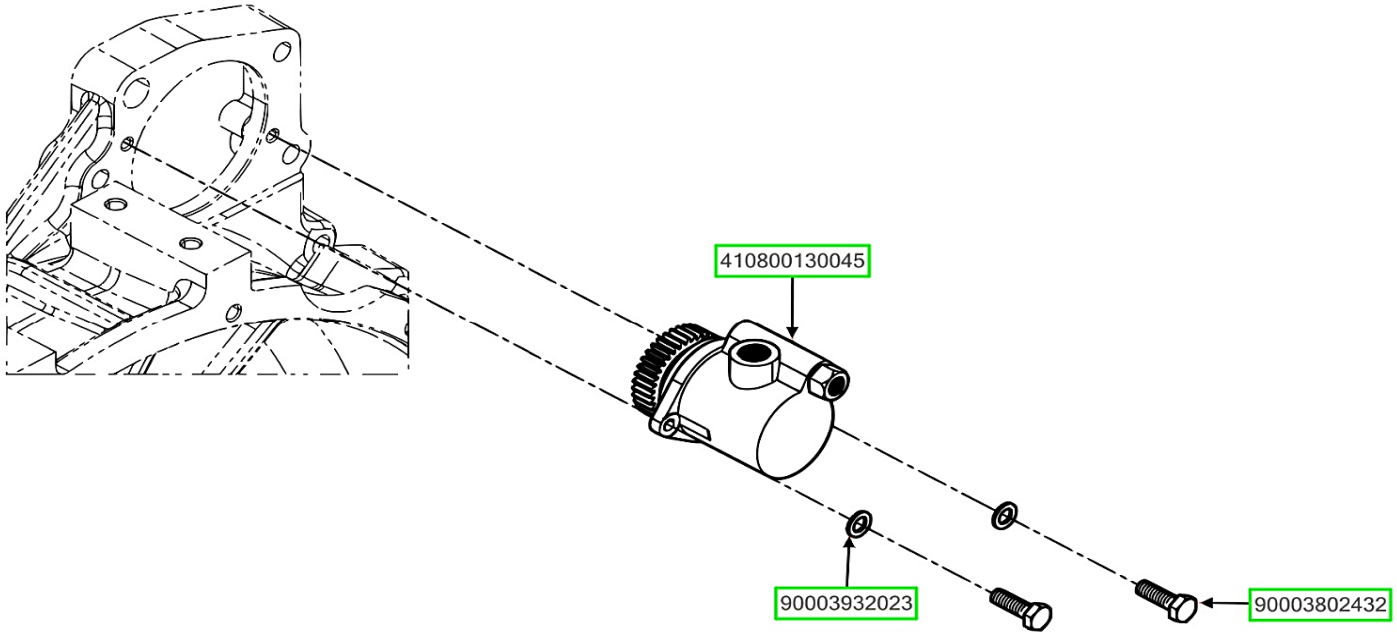

NAME_ASSB	CODE_PART NO	NAME	QTY
HYDRAULIC PUMP	410800130045	HYDRAULIC PUMP	1
	90003932023	WAVE SPRING WASHER	2
	90003802432	HEXAGON HEAD BOLT	2

NAME_ASSB	CODE_PART NO	NAME	QTY
HYDRAULIC PUMP			

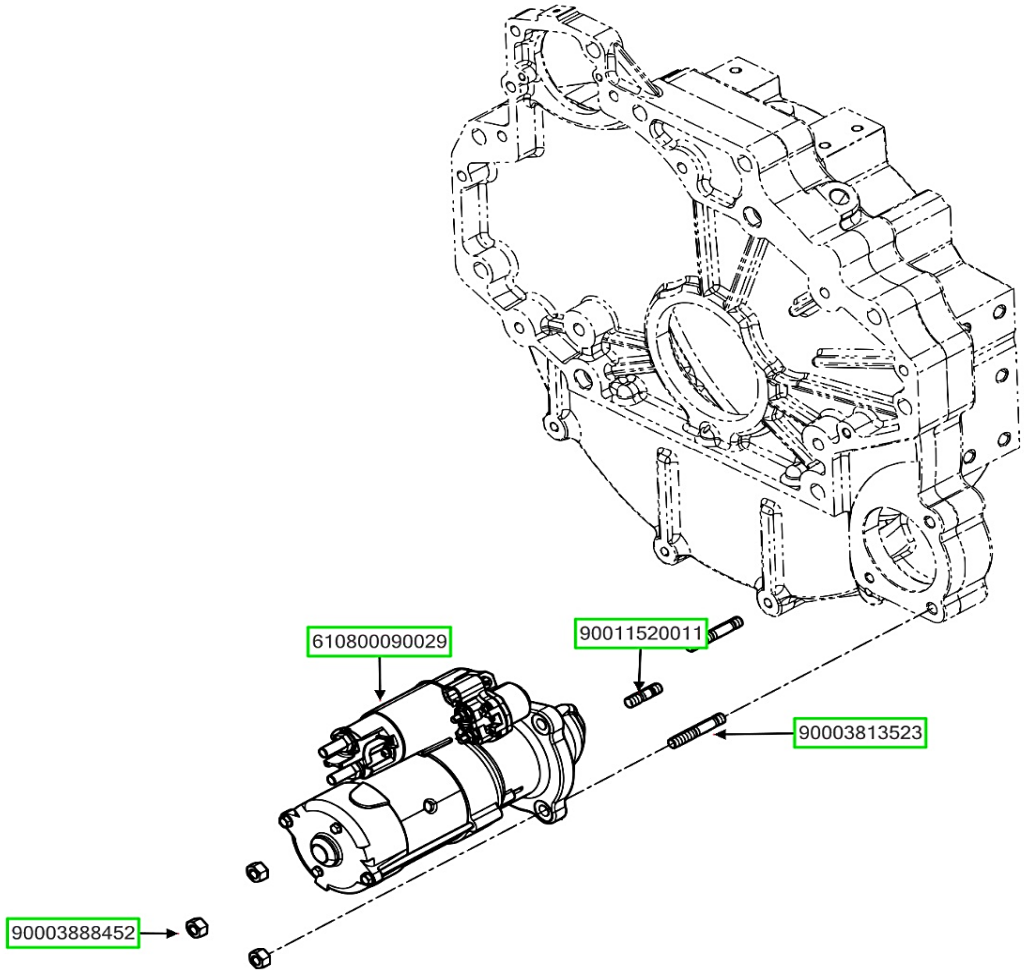

NAME_ASSB	CODE_PART NO	NAME	QTY
POWER MOTOR	90003813523	DOUBLE END STUD	1
	90011520011	STUD	2
	610800090029	POWER MOTOR	1
	90003888452	HEXAGON HEAD BOLT	3

NAME_ASSB	CODE_PART NO	NAME	QTY
POWER MOTOR			

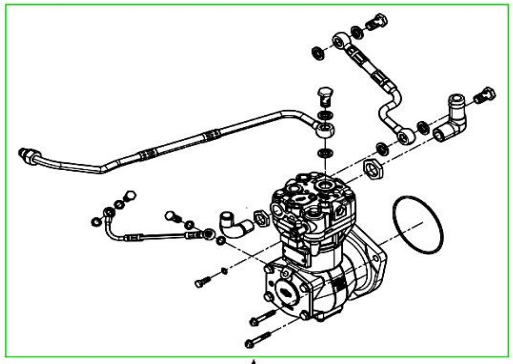

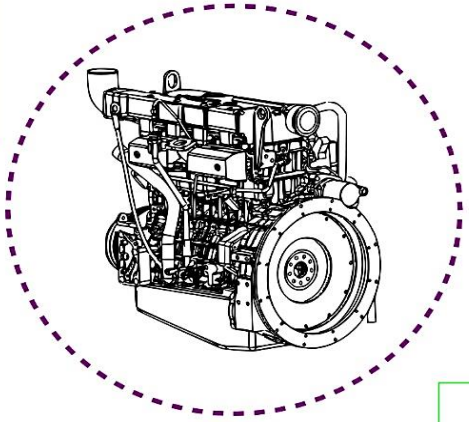

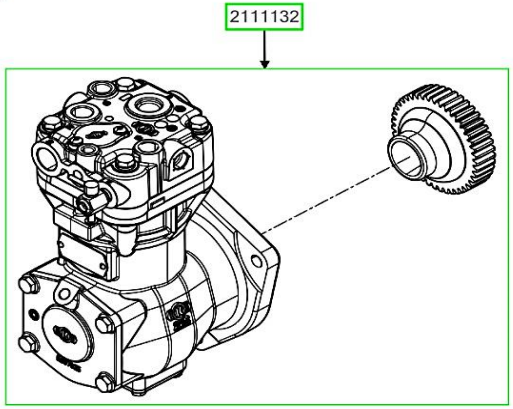

NAME_ASSB	CODE_PART NO	NAME	QTY
AIR COMPRESSOR	2111131	SUB PARTS	1
	2111132	AIR COMPRESSOR	1

NAME_ASSB	CODE_PART NO	NAME	QTY
AIR COMPRESSOR			

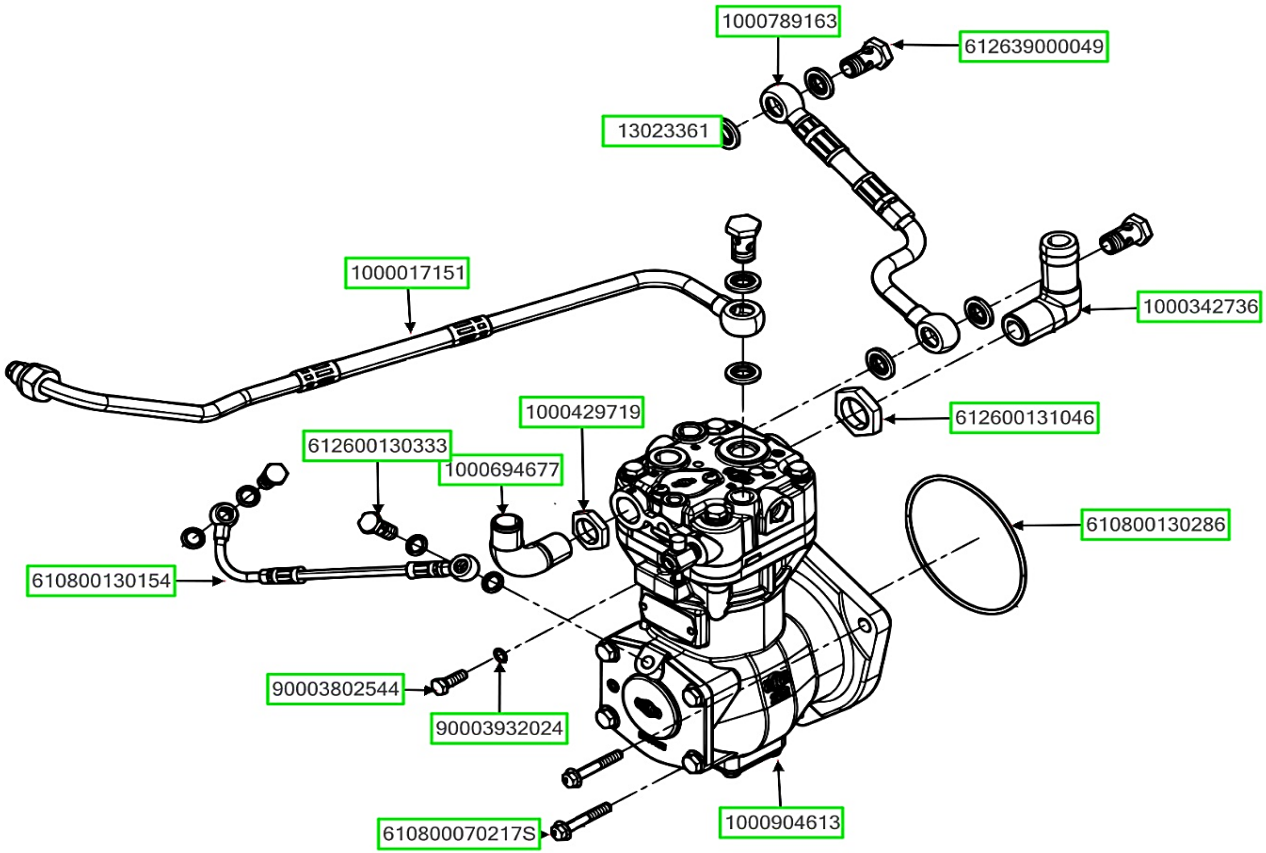

NAME_ASSB	CODE_PART NO	NAME	QTY
SUB PARTS	13023361	WAVE SPRING WASHER	6
	1000789163	AIR COMPRESSOR WATER PIPE ASSEMBLY	1
	612639000049	BOLT	3
	612600131046	NUT	1
	1000342736	PIPE JOINT	1
	610800130286	SEAL RING	1
	1000904613	AIR COMPRESSOR	1
	1000017151	AIR COMPRESSOR WATER PIPE ASSEMBLY	1

NAME_ASSB	CODE_PART NO	NAME	QTY
SUB PARTS	610800070217S	HEXAGON HEAD BOLT	2
	90003802544	HEXAGON HEAD BOLT	1
	90003932024	WAVE SPRING WASHER	1
	612600130333	BOLT	2
	610800130154	AIR COMPRESSOR OIL PIPE ASSEMBLY	1
	1000694677	CONVERSION ADAPTER	1
	1000429719	HEXAGON THIN NUT	1

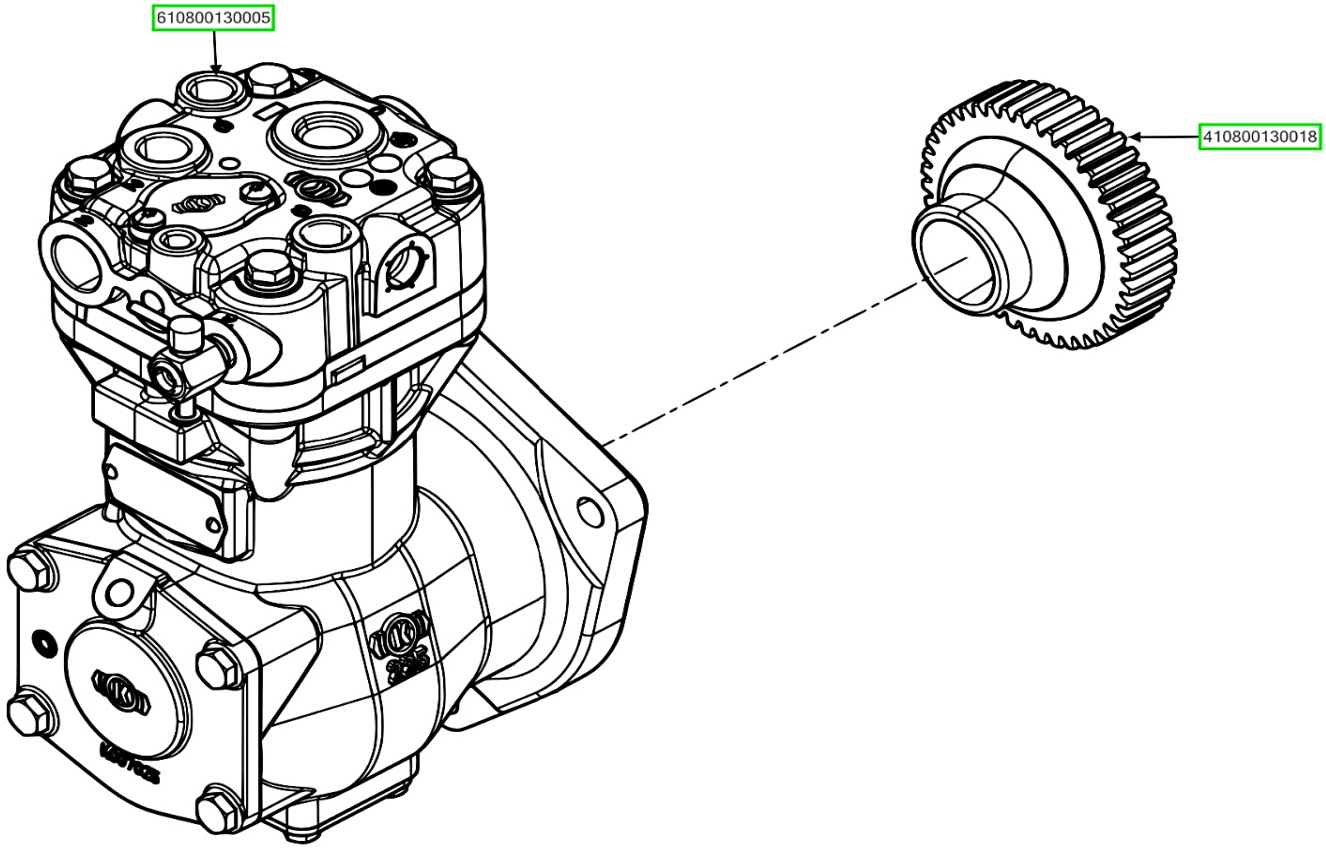

NAME_ASSB	CODE_PART NO	NAME	QTY
AIR COMPRESSOR	610800130005	AIR COMPRESSOR GEAR	1
	410800130018	AIR COMPRESSOR	1

NAME_ASSB	CODE_PART NO	NAME	QTY
AIR COMPRESSOR			

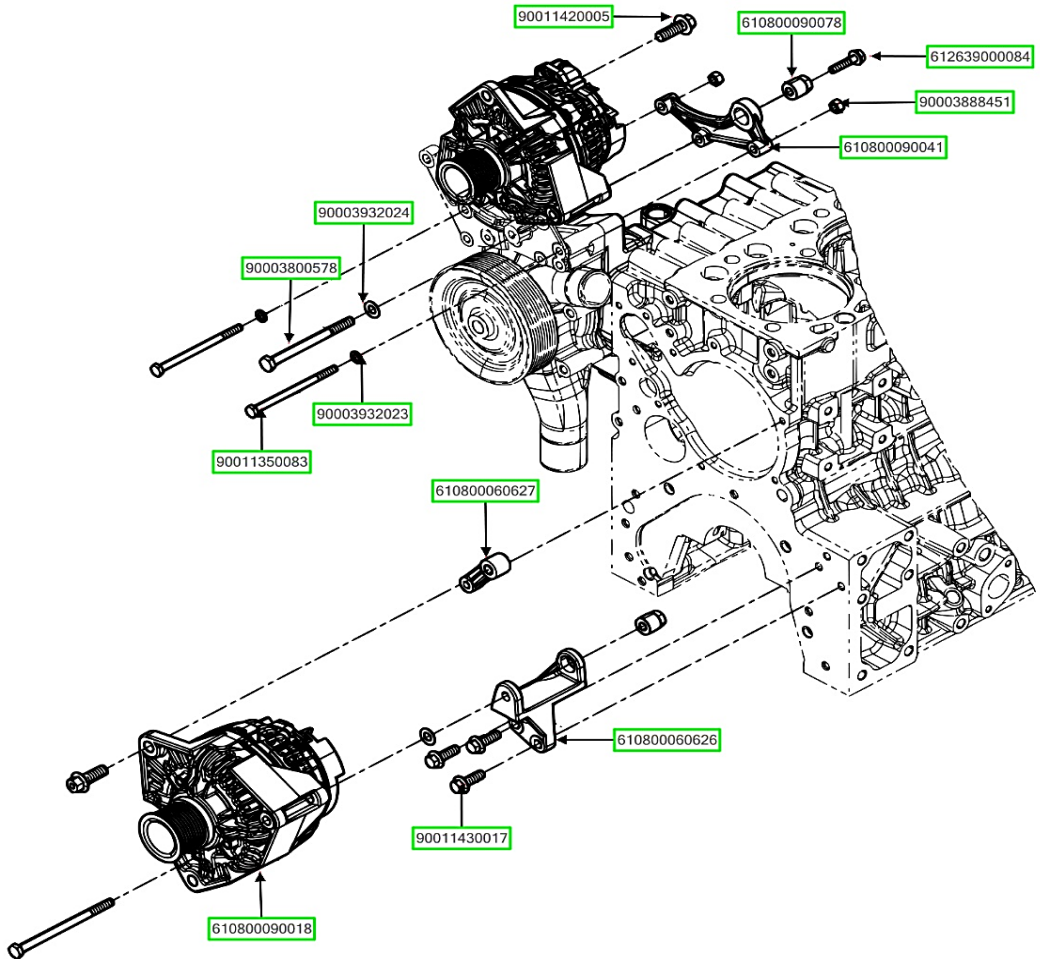

NAME_ASSB	CODE_PART NO	NAME	QTY
GENERATOR GROUP	612639000084	HEXAGON HEAD BOLT	1
	90003888451	HEXAGON HEAD BOLT	2
	610800090041	ALTERNATOR BRACKET	1
	610800090078	FERRULE 24° CONE CONNECTORS, NUT	2
	90011420005	HEXAGON FLANGE BOLT	2
	90003932024	WASHER WITH BALL FACE	2
	90003800578	HEXAGON HEAD BOLT	2

NAME_ASSB	CODE_PART NO	NAME	QTY
GENERATOR GROUP	90003932023	WAVE SPRING WASHER	2
	90011350083	HEXAGON HEAD BOLT	2
	610800060627	BRACKET	1
	610800060626	BRACKET	1
	90011430017	HEXAGON HEAD BOLT	3
	610800090018	GENERATOR	2

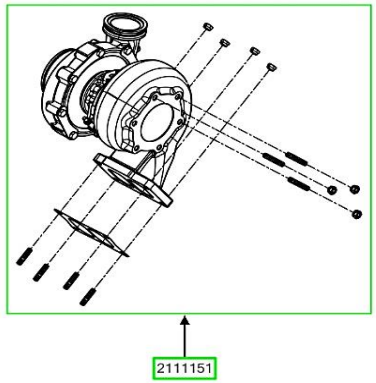

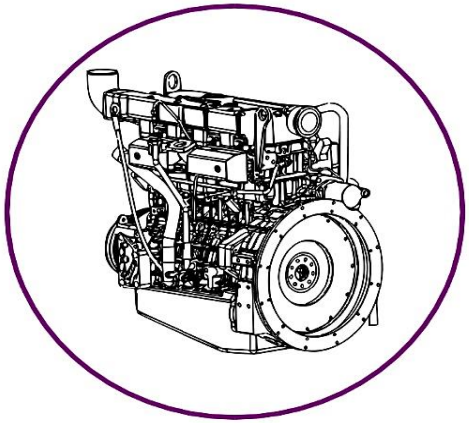

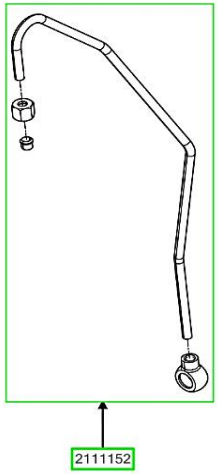

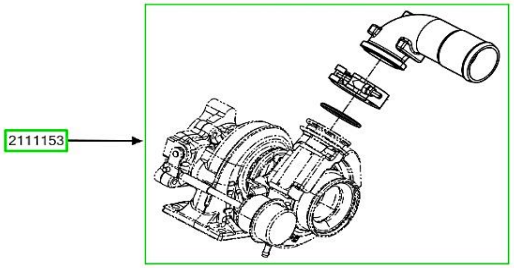

NAME_ASSB	CODE_PART NO	NAME	QTY
TURBOCHARGER GROUP	2111151	TURBOCHARGER GROUP	1
	2111152	TURBOCHARGER OIL PIPE GROUP	1
	2111153	COMPRESSOR PIPE GROUP	1

NAME_ASSB	CODE_PART NO	NAME	QTY
TURBOCHARGER GROUP			

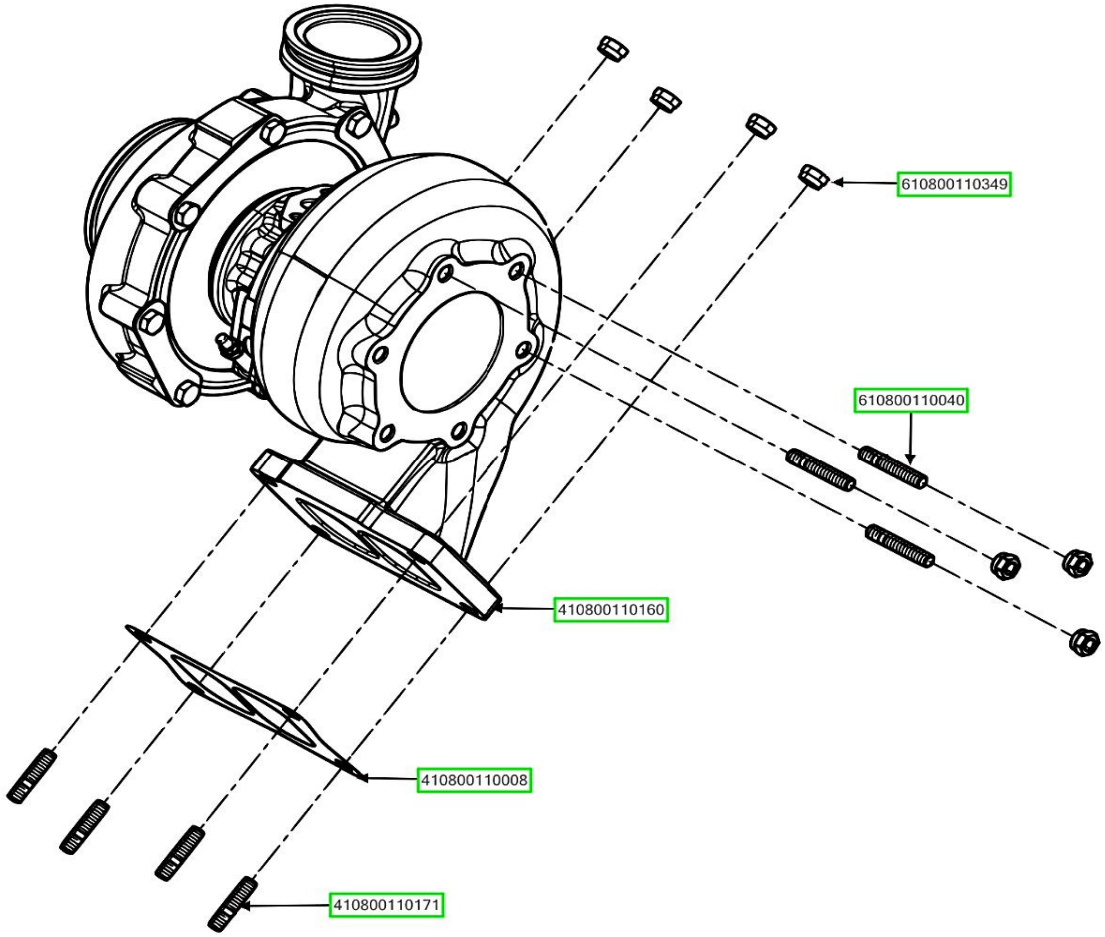

NAME_ASSB	CODE_PART NO	NAME	QTY
TURBOCHARGER ASSY	610800110349	HEXAGON HEAD BOLT	7
	610800110040	DOUBLE END STUD	3
	410800110160	TURBOCHARGER	1
	410800110008	GASKET	1
	410800110171	DOUBLE END STUD	4

NAME_ASSB	CODE_PART NO	NAME	QTY
TURBOCHARGER ASSY			

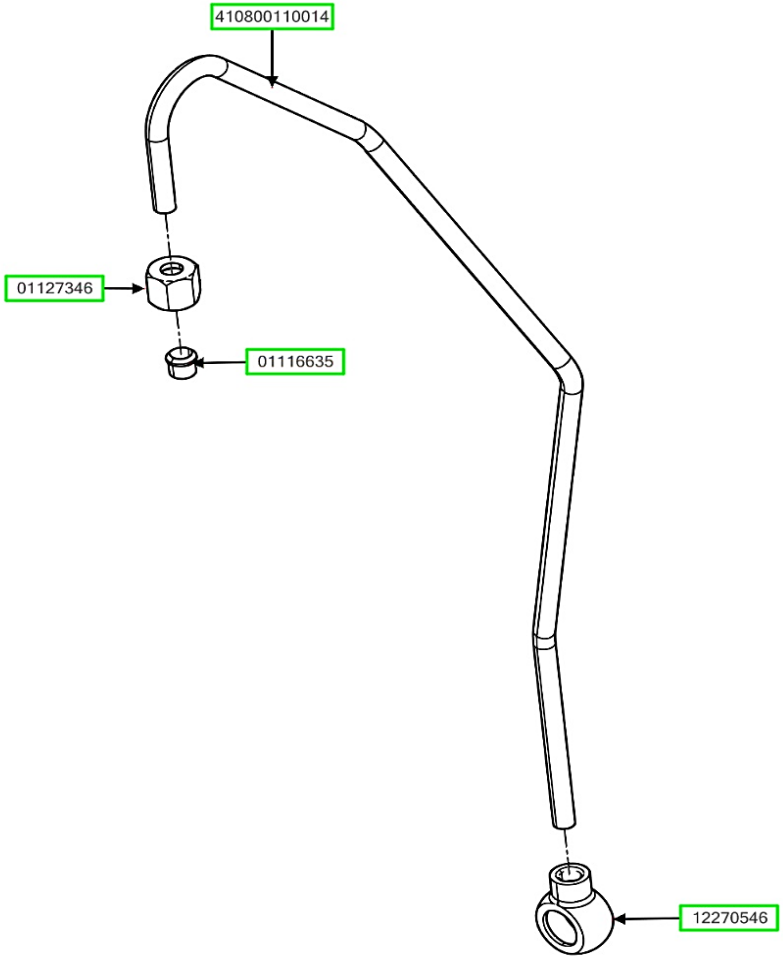

NAME_ASSB	CODE_PART NO	NAME	QTY
TURBOCHARGER OIL PIPE GROUP	410800110014	TURBOCHARGER OIL PIPE	1
	01127346	HEXAGON HEAD BOLT	1
	01116635	CONECTOR	1
	12270546	DISTRIBUTOR	1

NAME_ASSB	CODE_PART NO	NAME	QTY
TURBOCHARGER OIL PIPE GROUP			

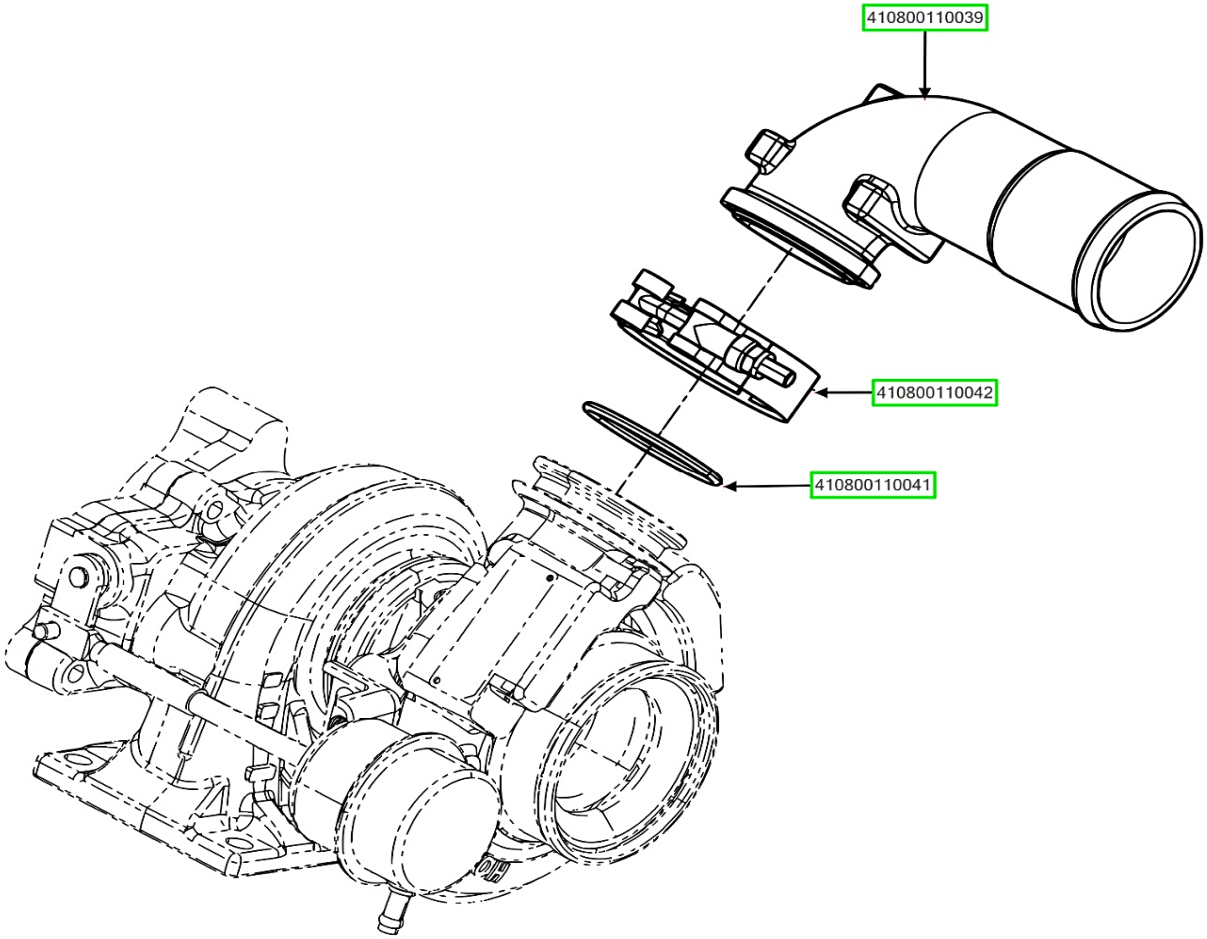

NAME_ASSB	CODE_PART NO	NAME	QTY
COMPRESSOR PIPE GROUP	410800110039	COMPRESSOR AIR PIPE	1
	410800110042	CLAMP	1
	410800110041	SEAL RING	1

NAME_ASSB	CODE_PART NO	NAME	QTY
COMPRESSOR PIPE GROUP			

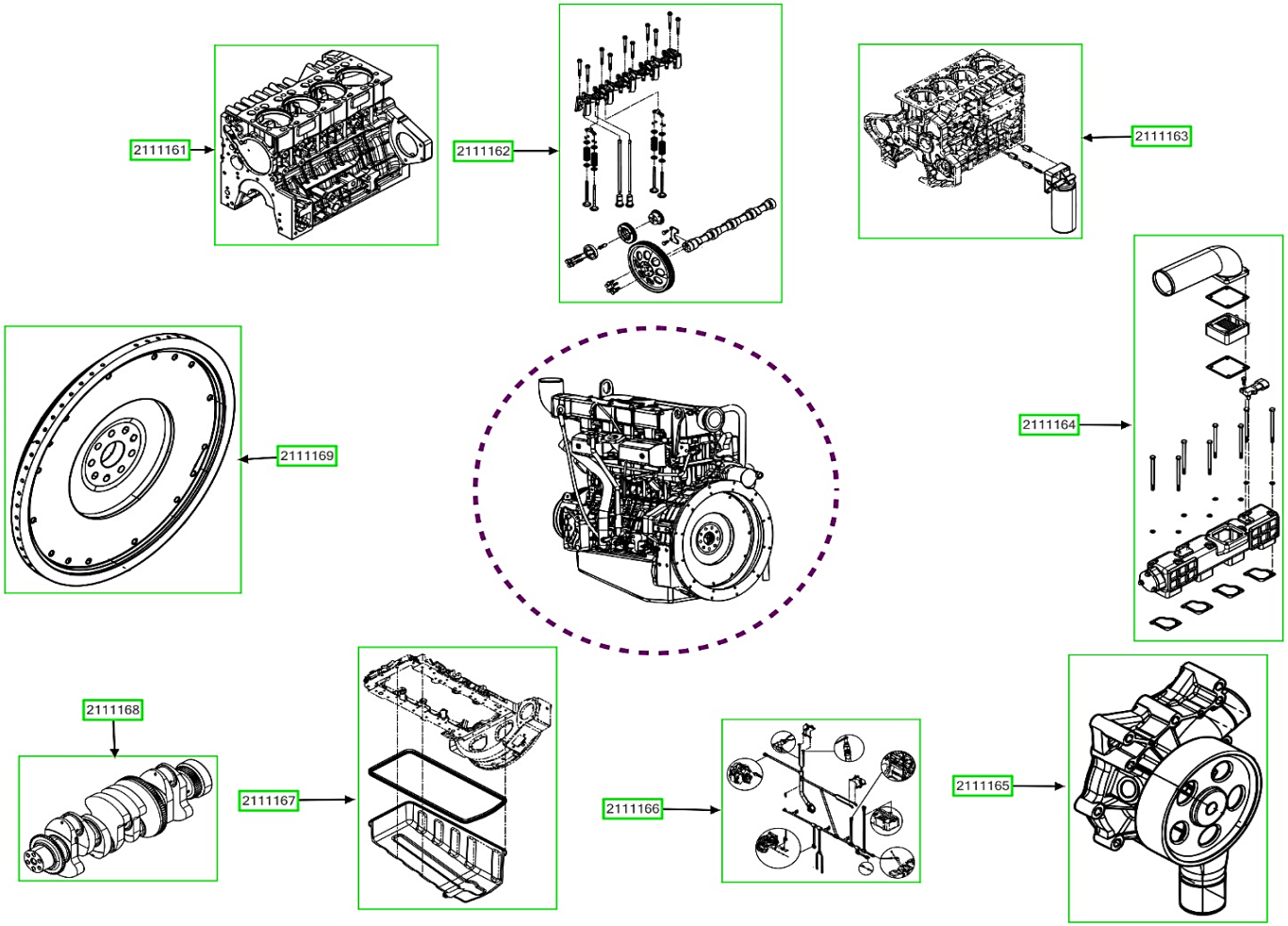

NAME_ASSB	CODE_PART NO	NAME	QTY
ENGINE BLOCK	2111161	ENGINE ASSY	1
	2111162	VALVE SYSTEM	1
	2111163	FUEL SYSTEM	1
	2111164	INTAKE/EXHAUST SYSTEM	1
	2111165	COLLING SYSTEM	1
	2111166	SENSOR ELECTRIC SYSTEM	1
	2111167	LUBRICATION SYSTEM	1

NAME_ASSB	CODE_PART NO	NAME	QTY
ENGINE BLOCK	2111168	MOTION GROUP	1
	2111169	FLYWHEEL GROUP	1

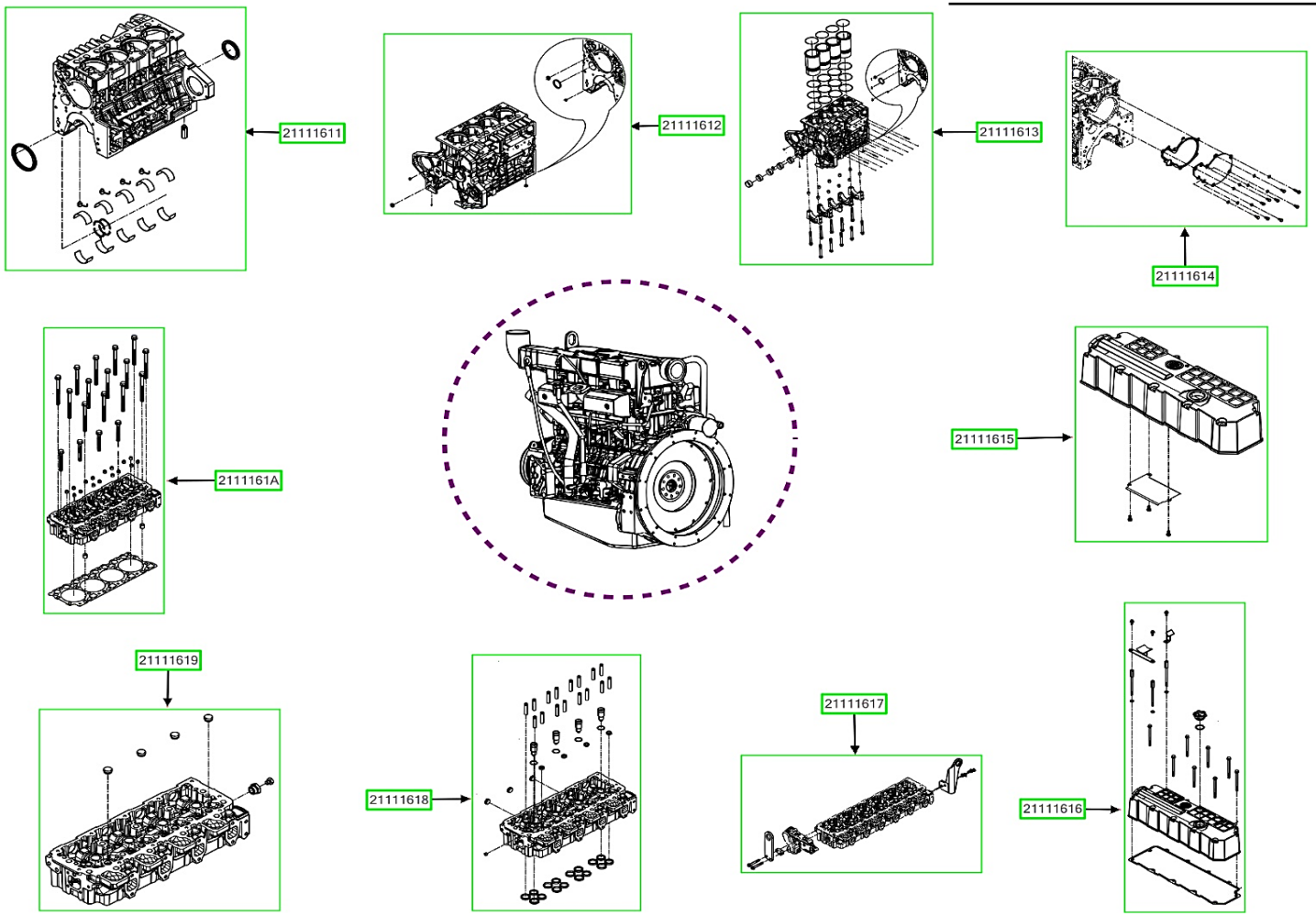

NAME_ASSB	CODE_PART NO	NAME	QTY
CYLINDER	21111611	ENGINE BLOCK GROUP	1
	21111612	CRANKCASE ASSEMBLY	1
	21111613	CYLINDER BLOCK PREASSEMBLY	1
	21111614	FRONT COVER GROUP	1
	21111615	CYLINDER HEAD COVER ASSEMBLY	1
	21111616	CYLINDER HEAD COVER GROUP	1
	21111617	ENGINE HANGER PLATE	1

NAME_ASSB	CODE_PART NO	NAME	QTY
CYLINDER	21111618	CYLINDER HEAD SUBASSEMBLY	1
	21111619	CYLINDER HEAD ASSEMBLY	1
	2111161A	CYLINDER HEAD GROUP	1

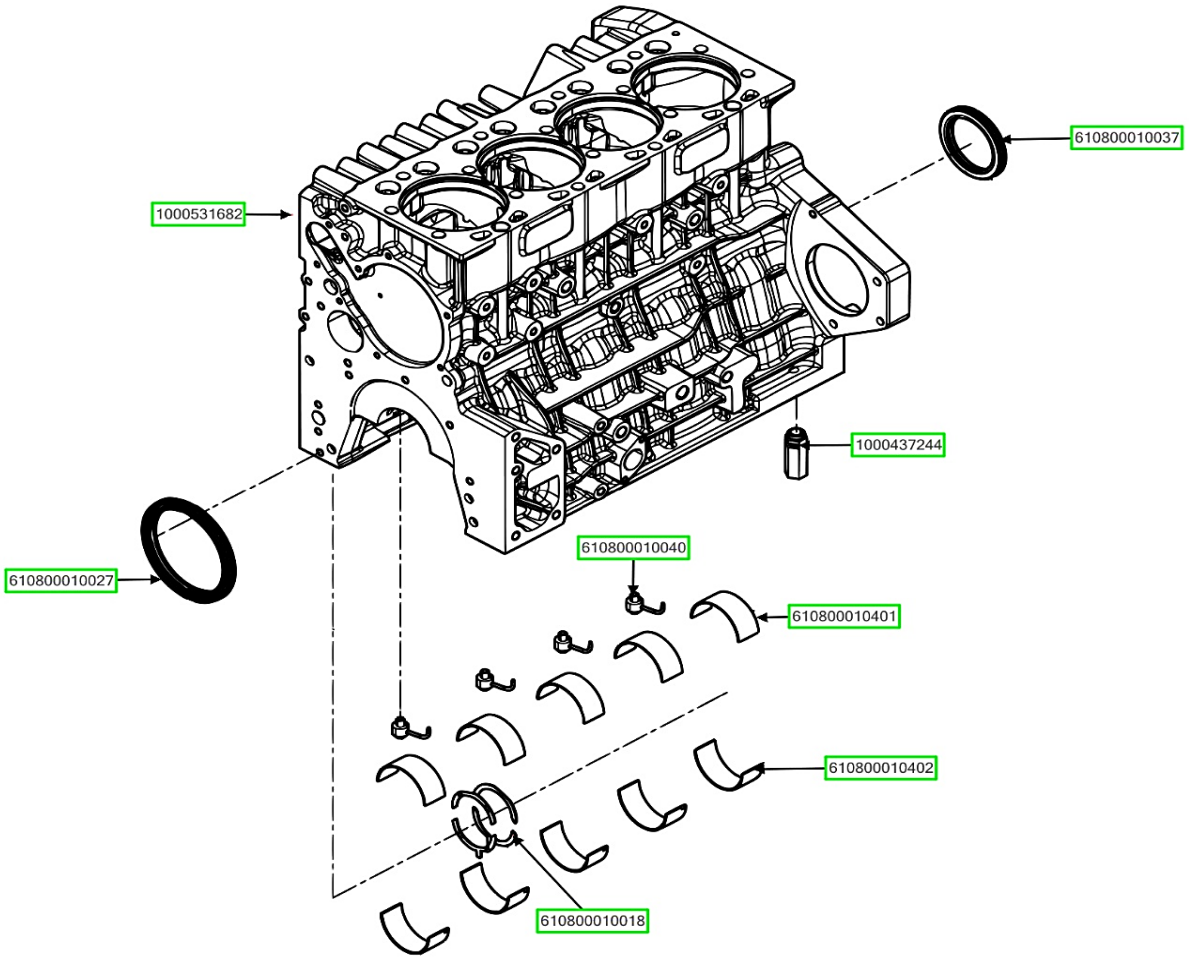

NAME_ASSB	CODE_PART NO	NAME	QTY
ENGINE BLOCK GROUP	610800010037	FRONT OIL SEAL	1
	1000437244	PRESSURE-LIMITING VALVE OF THE MAIN	1
	610800010040	PISTON NOZZLE SET	4
	610800010401	MAIN BEARING UPPER SHELL	5
	610800010402	MAIN BEARING LOWER SHELL	5
	610800010018	THRUST PLATE SET	2
	610800010027	REAR OIL SEAL	1

NAME_ASSB	CODE_PART NO	NAME	QTY
ENGINE BLOCK GROUP	1000531682	CRANKCASE ASSEMBLY	1

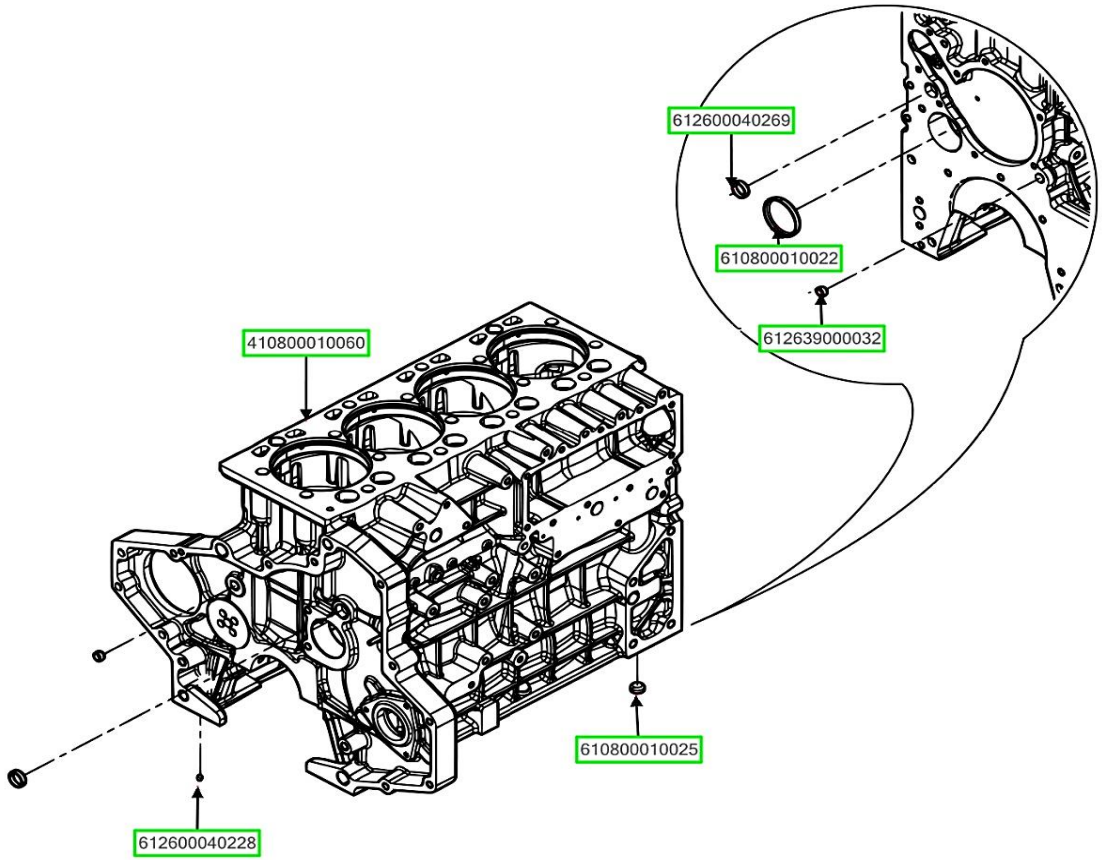

NAME_ASSB	CODE_PART NO	NAME	QTY
CRANKCASE ASSEMBLY	612600040269	COREHOLE PLUG	2
	610800010022	LOCKING WASHER	1
	612639000032	COREHOLE PLUG 14/10	2
	610800010025	COREHOLE PLUG 14/10	1
	612600040228	COREHOLE PLUG 14/10	1
	410800010060	ENGINE BLOCK GROUP	1

NAME_ASSB	CODE_PART NO	NAME	QTY
CRANKCASE ASSEMBLY			

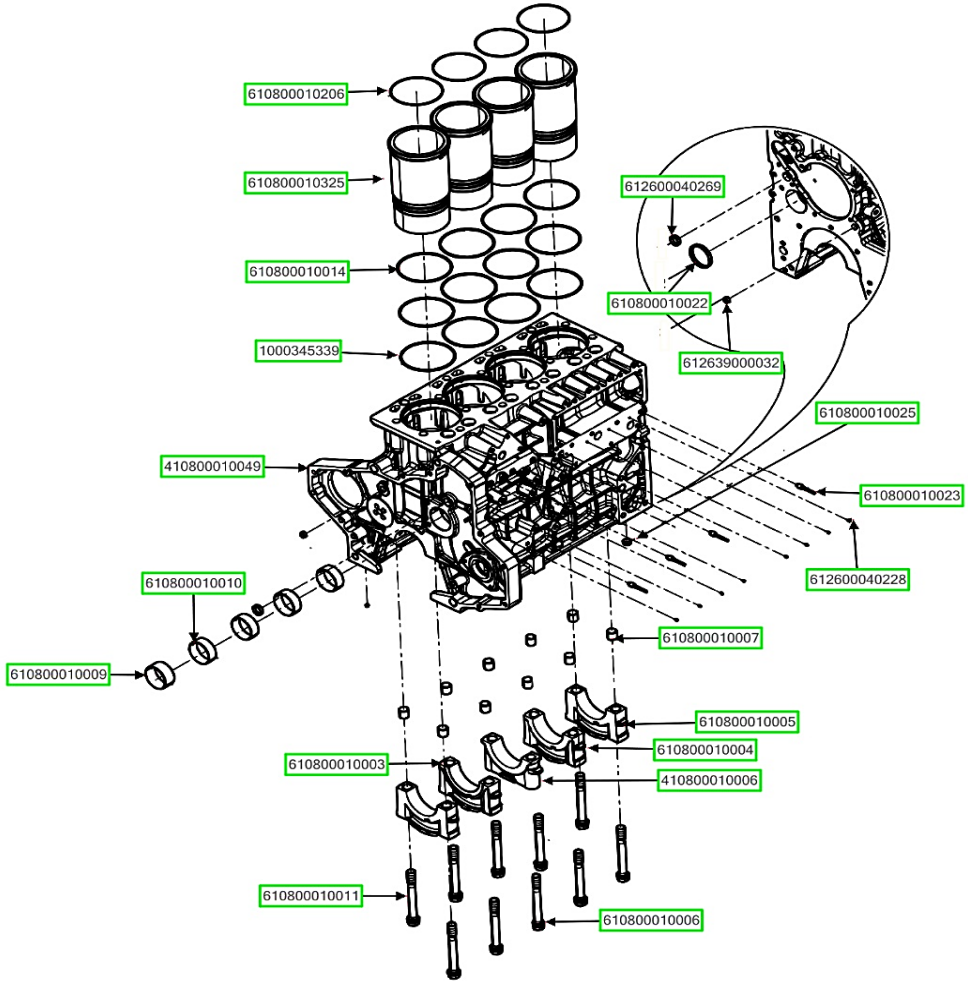

NAME_ASSB	CODE_PART NO	NAME	QTY
CYLINDER BLOCK PREASSEMBLY	612600040269	COREHOLE PLUG	2
	610800010022	LOCKING WASHER	1
	612639000032	COREHOLE PLUG 14/10	2
	610800010025	COREHOLE PLUG 14/10	1
	610800010023	STUD	4
	612600040228	COREHOLE PLUG 14/10	9
	610800010007	DOWEL PIN	10

NAME_ASSB	CODE_PART NO	NAME	QTY
CYLINDER BLOCK PREASSEMBLY	610800010005	MAIN BEARING CAP	2
	610800010004	MAIN BEARING CAP	1
	410800010006	MAIN BEARING CAP	1
	610800010003	MAIN BEARING CAP	1
	610800010011	HEXAGON HEAD BOLT	1
	610800010006	HEXAGON HEAD BOLT	9
	610800010009	CAMSHAFT BUSH	1

NAME_ASSB	CODE_PART NO	NAME	QTY
CYLINDER BLOCK PREASSEMBLY	610800010010	CAMSHAFT BUSH	4
	410800010049	CRANKCASE ASSEMBLY	1
	1000345339	CYLINDER LINER RING	4
	610800010014	CYLINDER LINER RING	8
	610800010325	CYLINDER LINER	4
	610800010206	CYLINDER LINER RING	4

NAME_ASSB	CODE_PART NO	NAME	QTY
CYLINDER BLOCK PREASSEMBLY			

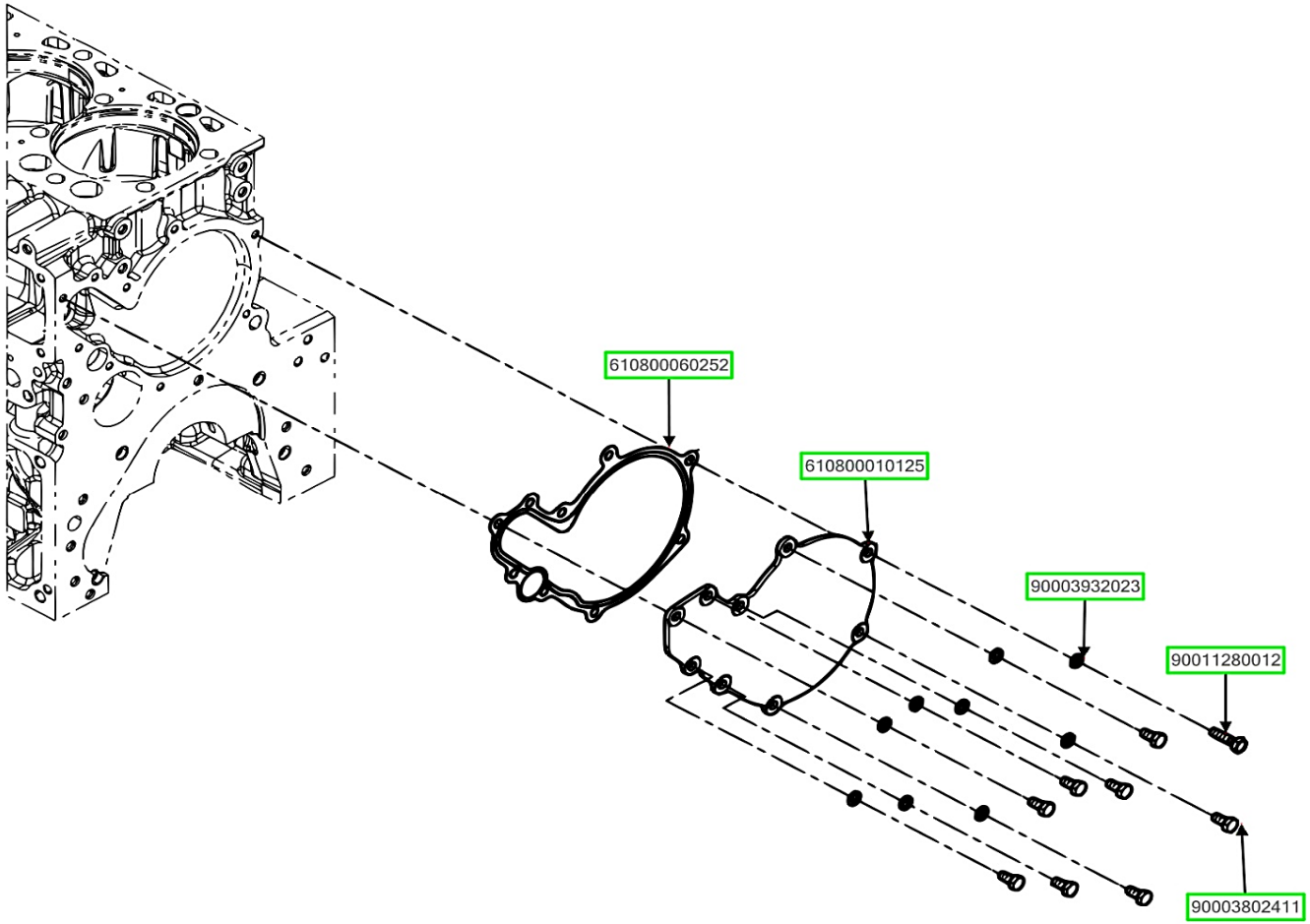

NAME_ASSB	CODE_PART NO	NAME	QTY
FRONT COVER GROUP	610800060252	GASKET	1
	610800010125	COVER	1
	90003932023	WAVE SPRING WASHER	9
	90011280012	HEXAGON FLANGE BOLT	1
	90003802411	HEXAGON FLANGE BOLT	8

NAME_ASSB	CODE_PART NO	NAME	QTY
FRONT COVER GROUP			

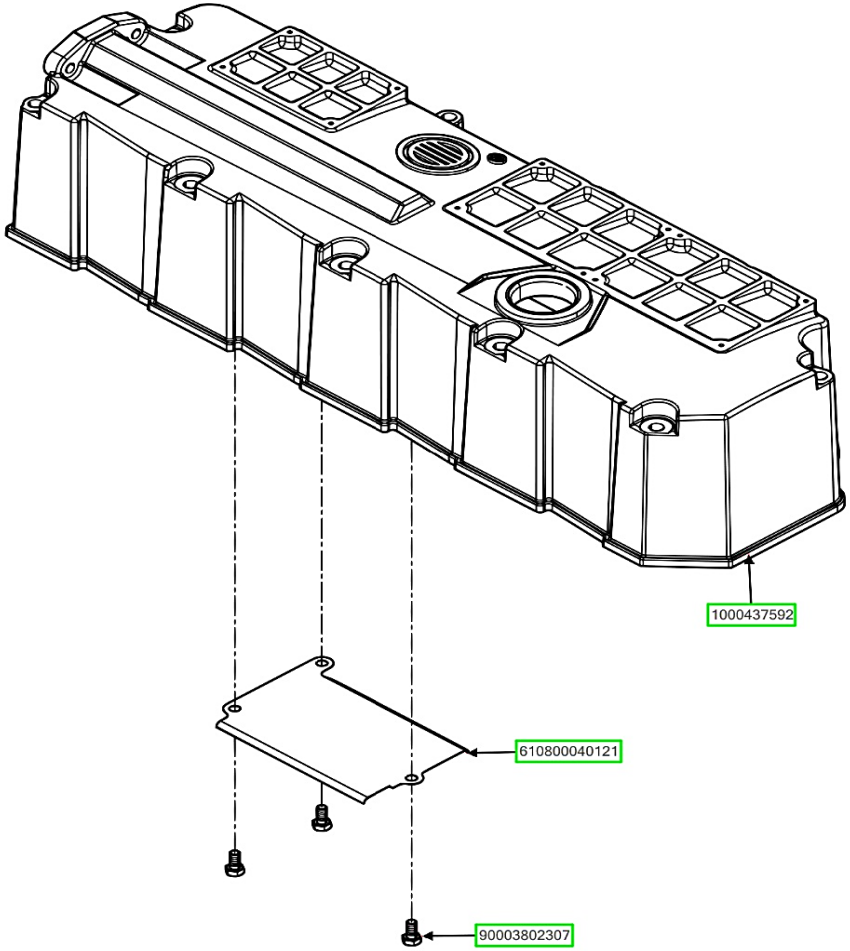

NAME_ASSB	CODE_PART NO	NAME	QTY
CYLINDER HEAD COVER ASSEMBLY	1000437592	CYLINDER HEAD COVER	1
	610800040121	SEPARATING OIL BOARD	1
	90003802307	HEXAGON HEAD BOLT	3

NAME_ASSB	CODE_PART NO	NAME	QTY
CYLINDER HEAD COVER ASSEMBLY			

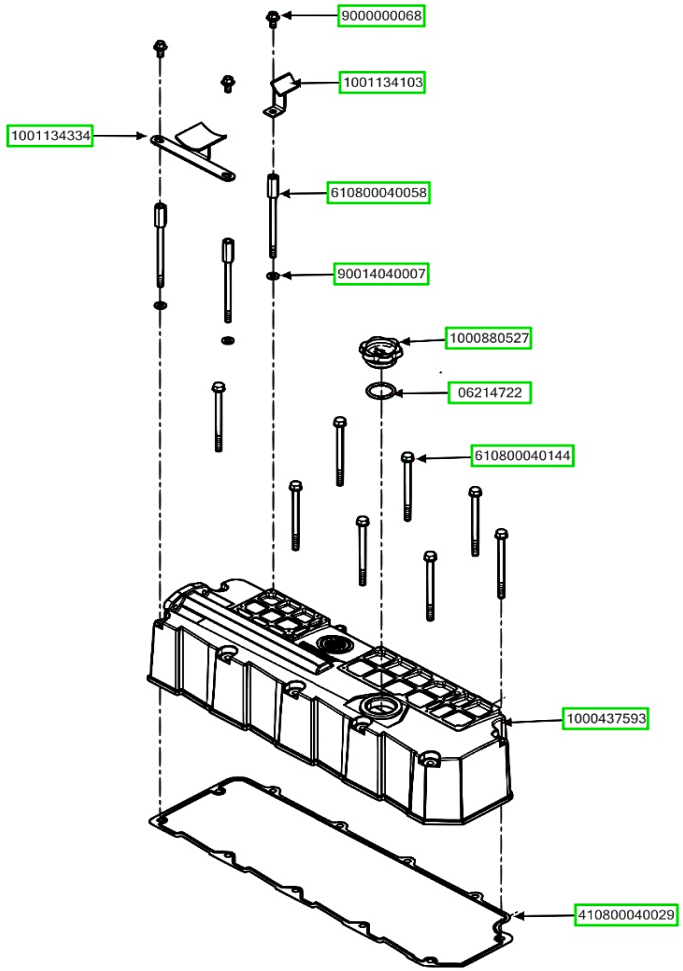

NAME_ASSB	CODE_PART NO	NAME	QTY
CYLINDER HEAD COVER GROUP	9000000068	HEXAGON HEAD BOLT	3
	1001134103	BRACKET	1
	610800040058	DOUBLE END STUD	3
	90014040007	WAVE SPRING WASHER	3
	1000880527	OIL FILLING PIPE CAP	1
	06214722	O-RING	1
	610800040144	HEXAGON HEAD BOLT	8

NAME_ASSB	CODE_PART NO	NAME	QTY
CYLINDER HEAD COVER GROUP	1000437593	CYLINDER HEAD COVER ASSEMBLY	1
	410800040029	CYLINDER HEAD COVER GASKET	1
	1001134334	BRACKET	1

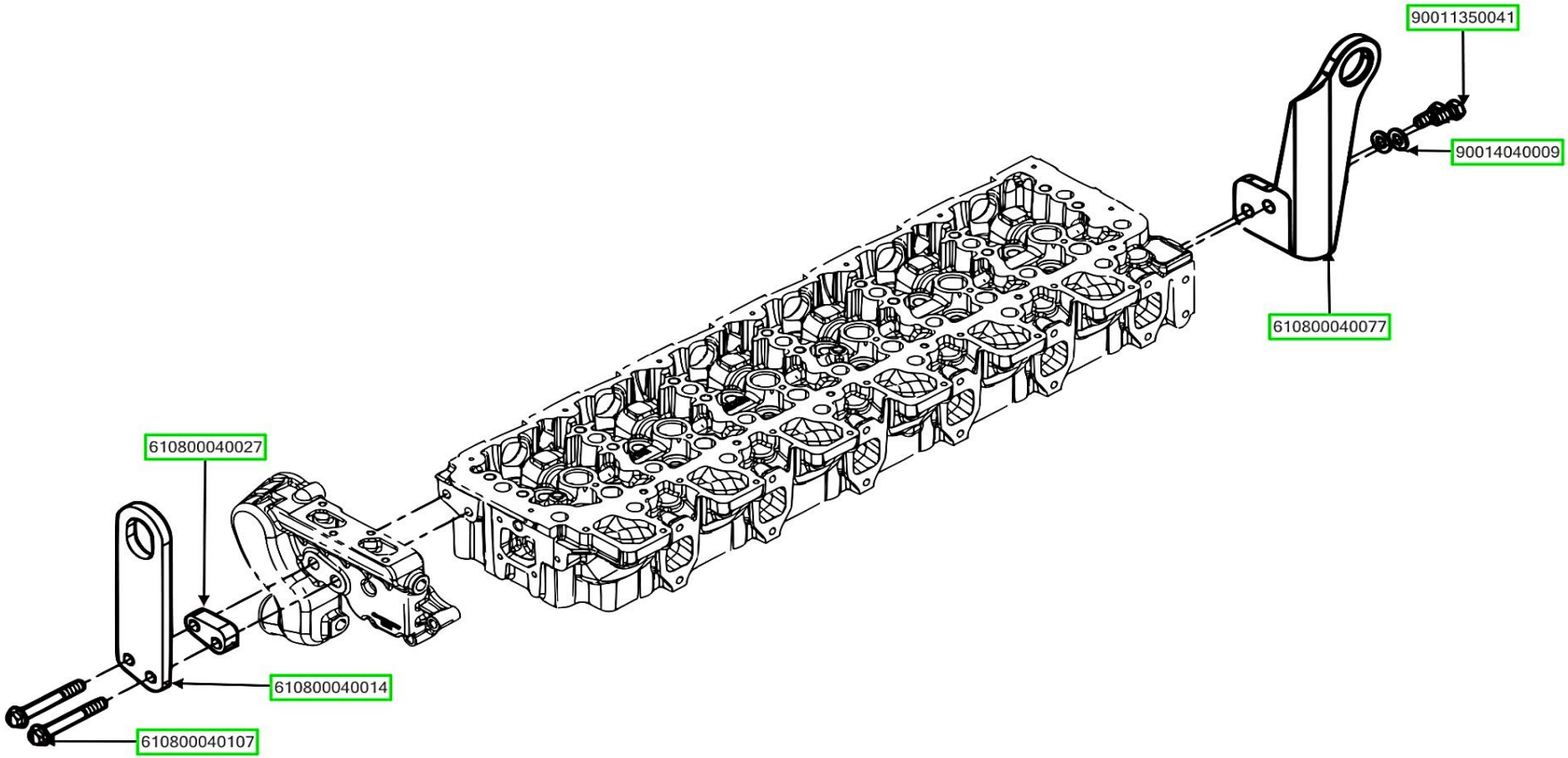

NAME_ASSB	CODE_PART NO	NAME	QTY
ENGINE HANGER PLATE	90011350041	HEXAGON HEAD BOLT	2
	90014040009	WAVE SPRING WASHER	2
	610800040077	ENGINE HANGER PLATE	1
	610800040027	COREHOLE PLUG	1
	610800040014	ENGINE HANGER PLATE	1
	610800040107	HEXAGON HEAD BOLT	2

NAME_ASSB	CODE_PART NO	NAME	QTY
ENGINE HANGER PLATE			

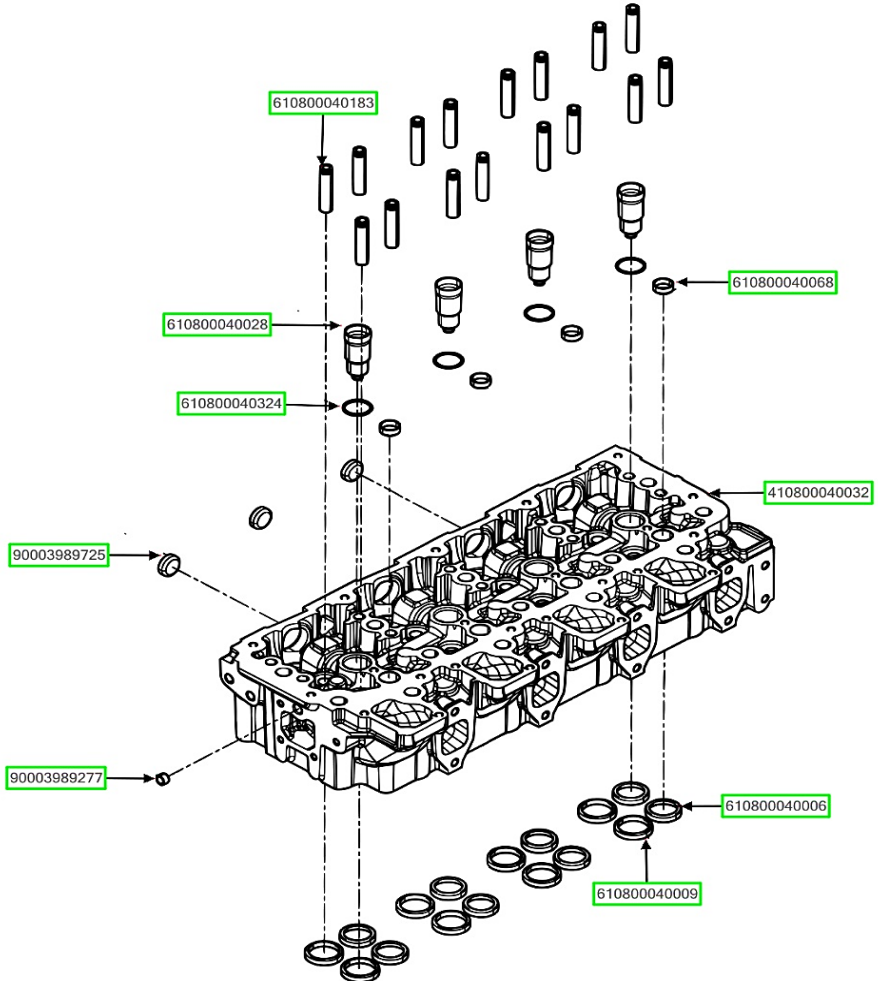

NAME_ASSB	CODE_PART NO	NAME	QTY
CYLINDER HEAD SUBASSEMBLY	610800040068	COREHOLE PLUG	4
	410800040032	CYLINDER HEAD	1
	610800040006	EXHAUST VALVE SEAT	8
	610800040009	INTAKE VALVE SEAT	8
	90003989277	COREHOLE PLUG	1
	90003989725	COREHOLE PLUG	3
	610800040324	O-RING	4

NAME_ASSB	CODE_PART NO	NAME	QTY
CYLINDER HEAD SUBASSEMBLY	610800040028	INJECTOR BUSH	4
	610800040183	VALVE GUIDE	16

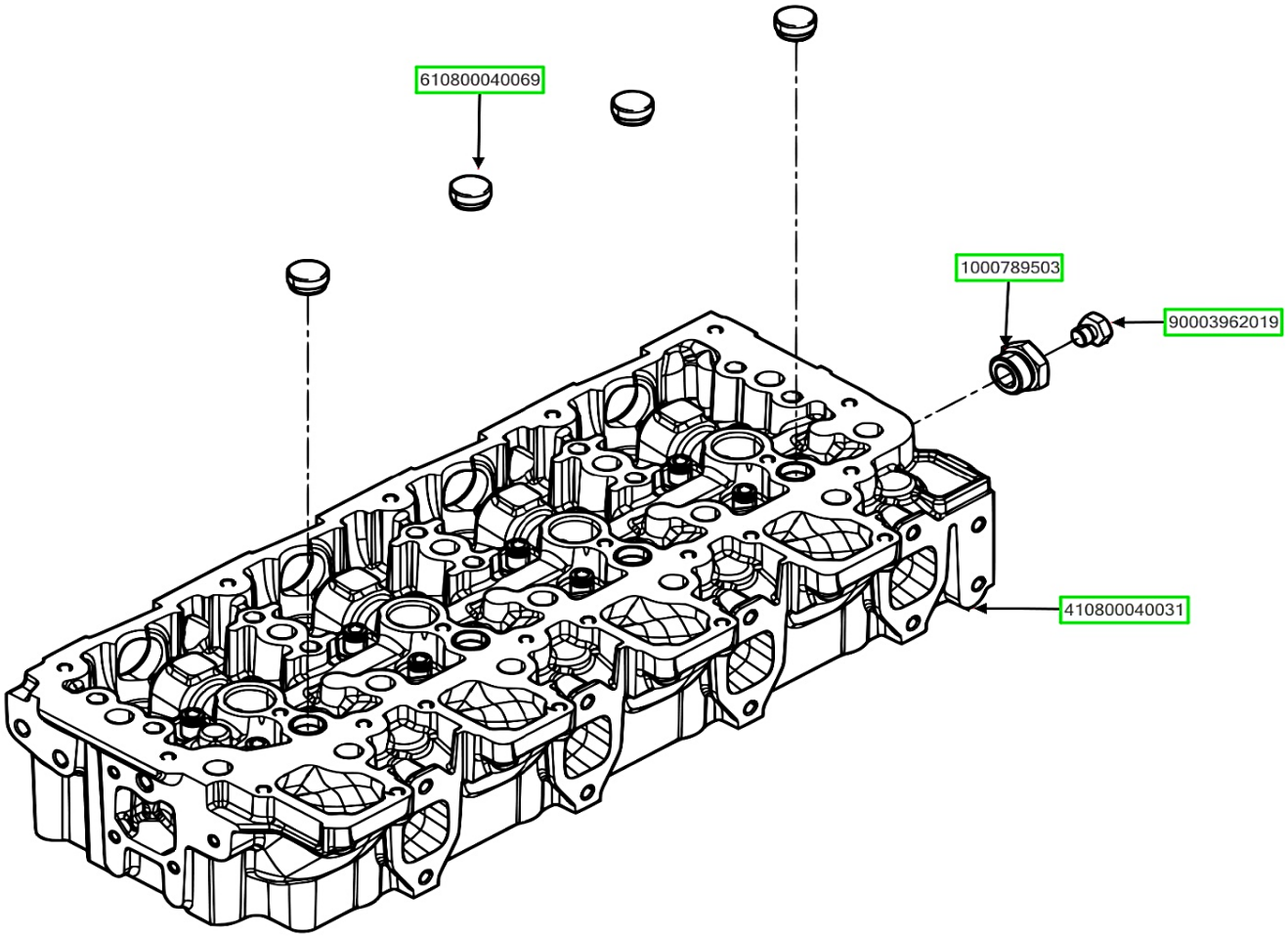

NAME_ASSB	CODE_PART NO	NAME	QTY
CYLINDER HEAD ASSEMBLY	610800040069	COREHOLE PLUG	4
	90003962019	HEXAGON FLANGE BOLT	1
	1000789503	SCREW PLUG	1
	410800040031	CYLINDER HEAD SUBASSEMBLY	1

NAME_ASSB	CODE_PART NO	NAME	QTY
CYLINDER HEAD ASSEMBLY			

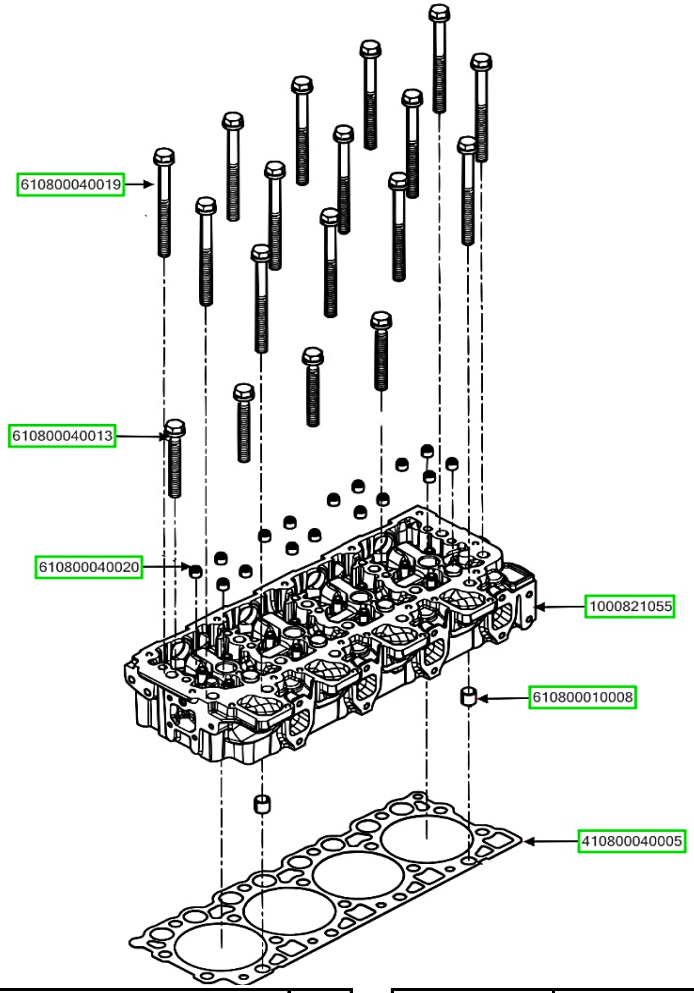

NAME_ASSB	CODE_PART NO	NAME	QTY
CYLINDER HEAD GROUP	1000821055	CYLINDER HEAD SUBASSEMBLY	1
	610800010008	DOWEL PIN	2
	410800040005	CYLINDER HEAD GASKET	1
	610800040013	HEXAGON HEAD BOLT	16
	610800040020	COREHOLE PLUG	*4*
	610800040019	HEXAGON HEAD BOLT	14

NAME_ASSB	CODE_PART NO	NAME	QTY
CYLINDER HEAD GROUP			

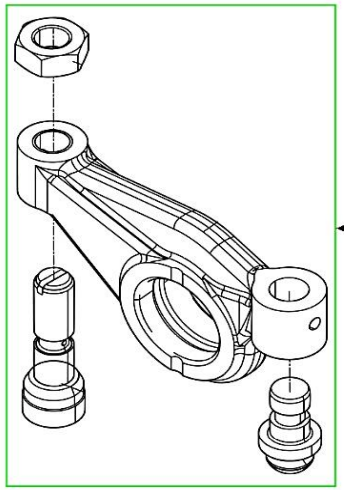

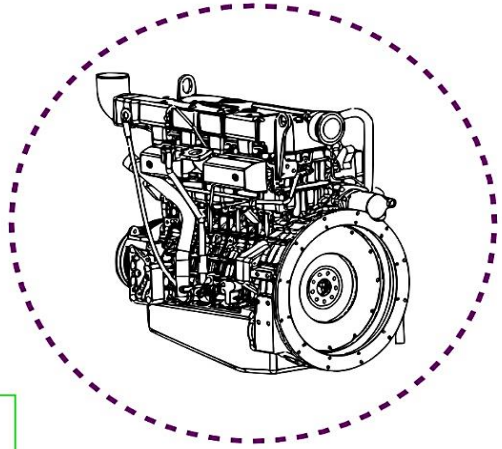

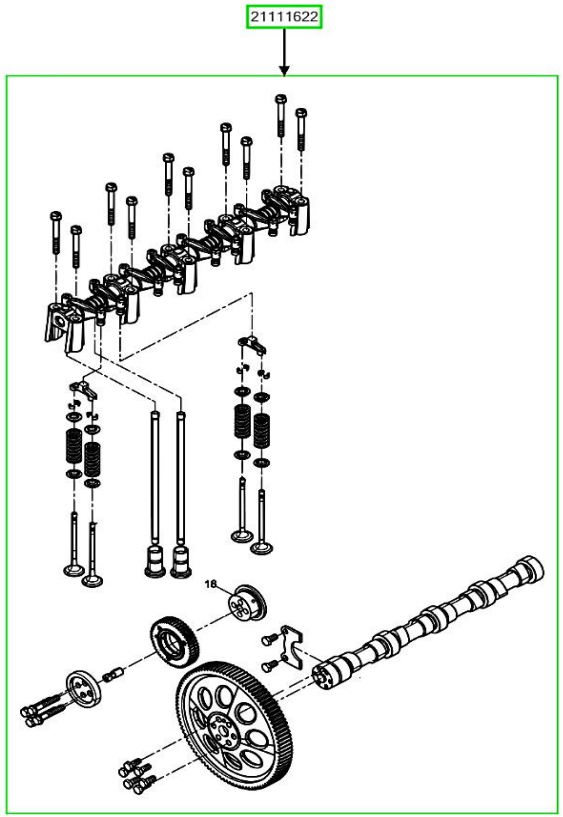

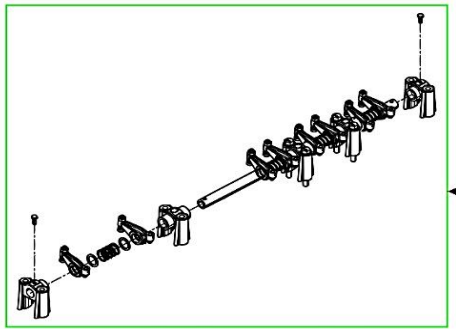

NAME_ASSB	CODE_PART NO	NAME	QTY
VALVE SYSTEM	21111621	INTAKE ROCKER ARM SET	1
	21111622	VALVE TRAIN GROUP	1
	21111623	INTEGRATED ROCKER ARM SHAFT ASSEMBLY	1

NAME_ASSB	CODE_PART NO	NAME	QTY
VALVE SYSTEM			

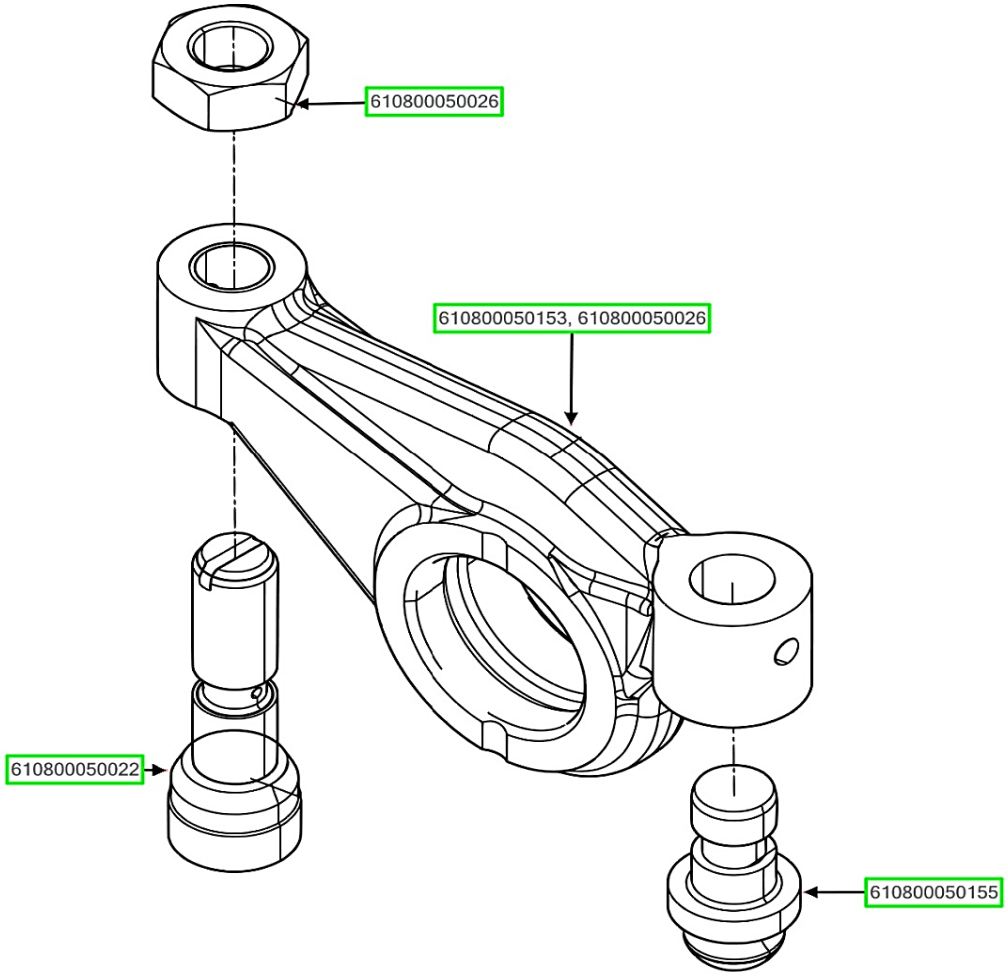

NAME_ASSB	CODE_PART NO	NAME	QTY
INTAKE ROCKER ARM SET	610800050026	HEXAGON LOCK NUT	1
	610800050153	INTAKE ROCKER ARM	1
	610800050154	EXHAUST ROCKER ARM	2
	610800050155	BALL PIN	1
	610800050022	HEAD ROCKER ARM	1

NAME_ASSB	CODE_PART NO	NAME	QTY
INTAKE ROCKER ARM SET			

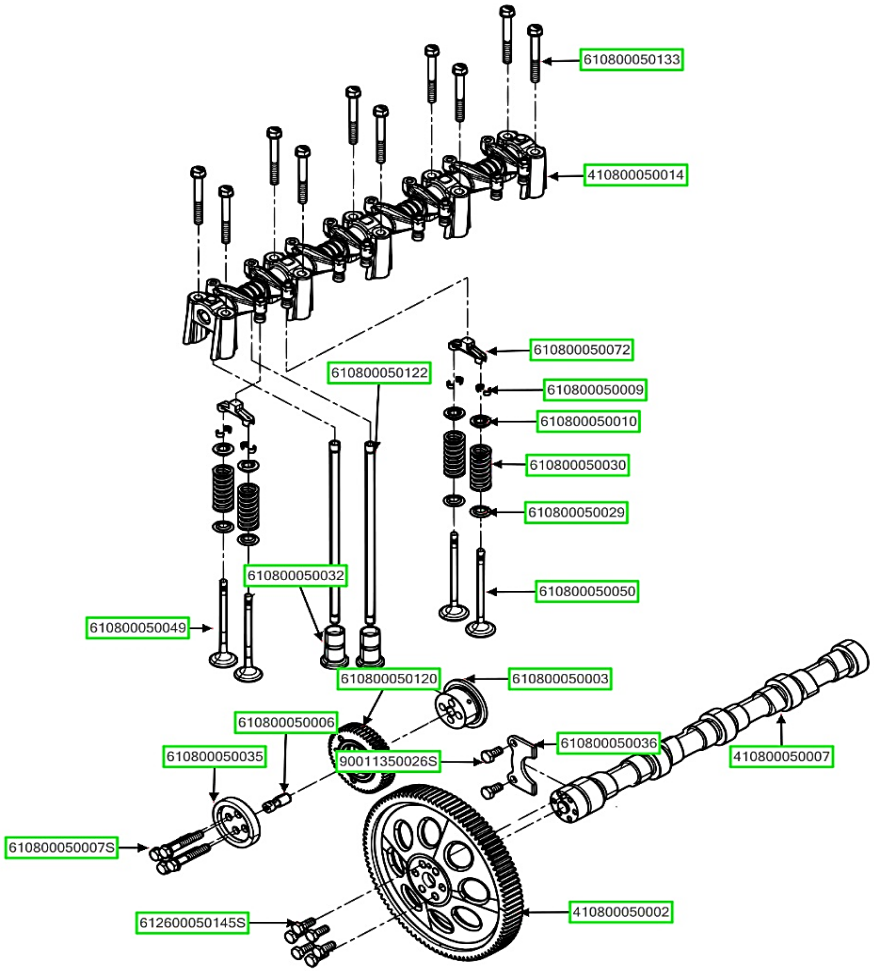

NAME_ASSB	CODE_PART NO	NAME	QTY
VALVE TRAIN GROUP	610800050133	HEXAGON HEAD BOLT	10
	410800050014	INTEGRATED ROCKER ARM SHAFT ASSEMBLY	1
	610800050072	VALVE BRIDGE	8
	610800050009	VALVE COLLET	32
	610800050010	VALVE SPRING RETAINER	16
	610800050030	VALVE SPRING	16
	610800050029	VALVE SPRING BOTTOM RETAINER	16

NAME_ASSB	CODE_PART NO	NAME	QTY
VALVE TRAIN GROUP	610800050050	EXHAUST VALVE	8
	610800050036	CAMSHAFT THRUST PLATE	1
	90011350026S	HEXAGON HEAD BOLT	2
	410800050007	CAMSHAFT ASSEMBLY	1
	410800050002	CAMSHAFT TIMING GEAR	1
	612600050145S	HEXAGON HEAD BOLT	6
	610800050007S	HEXAGON HEAD BOLT	4

NAME_ASSB	CODE_PART NO	NAME	QTY
MAIN FLOOR FRAME ASSY	610800050035	GASKET	1
	610800050006	IDLER GEAR SHAFT	1
	610800050120	IDLER GEAR ASSEMBLY	1
	610800050003	IDLE WHEEL SHAFT	1
	610800050032	TAPPET	8
	610800050122	PUSH ROD	8
	610800050049	INTAKE VALVE	8

NAME_ASSB	CODE_PART NO	NAME	QTY
MAIN FLOOR FRAME ASSY			

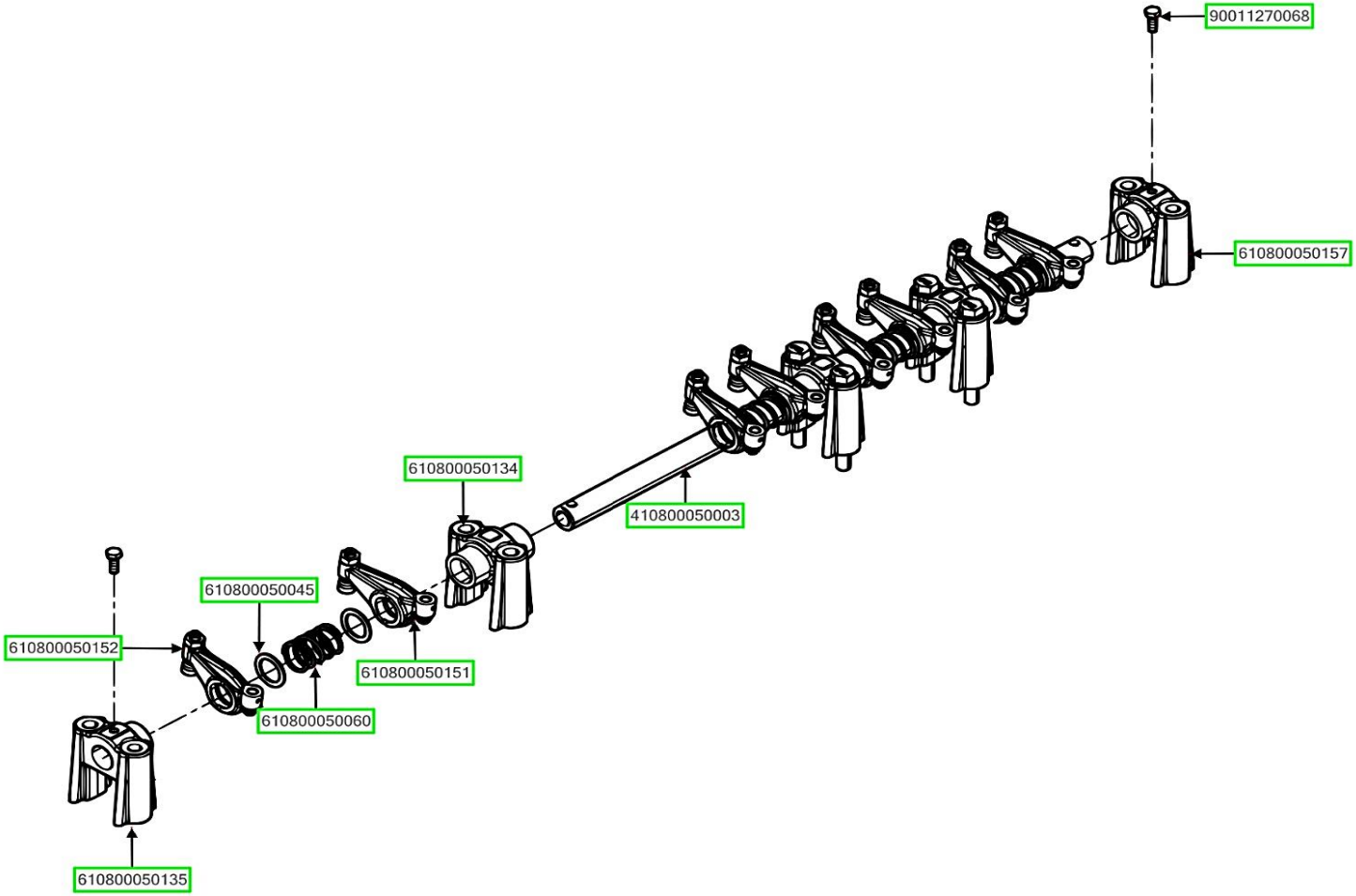

NAME_ASSB	CODE_PART NO	NAME	QTY
INTEGRATED ROCKER ARM SHAFT ASSEMBLY	90011270068	HEXAGON HEAD BOLT	2
	610800050157	ROCKER ARM BRACKET	1
	410800050003	ROCKER ARM SHAFT	1
	610800050134	ROCKER ARM BRACKET	3
	610800050151	INTAKE ROCKER ARM SET	4
	610800050045	WASHER	8
	610800050060	ROCKER ARM SPRING	4

NAME_ASSB	CODE_PART NO	NAME	QTY
INTEGRATED ROCKER ARM SHAFT ASSEMBLY	610800050152	EXHAUST ROCKER ARM	4
	610800050135	ROCKER ARM BRACKET	1

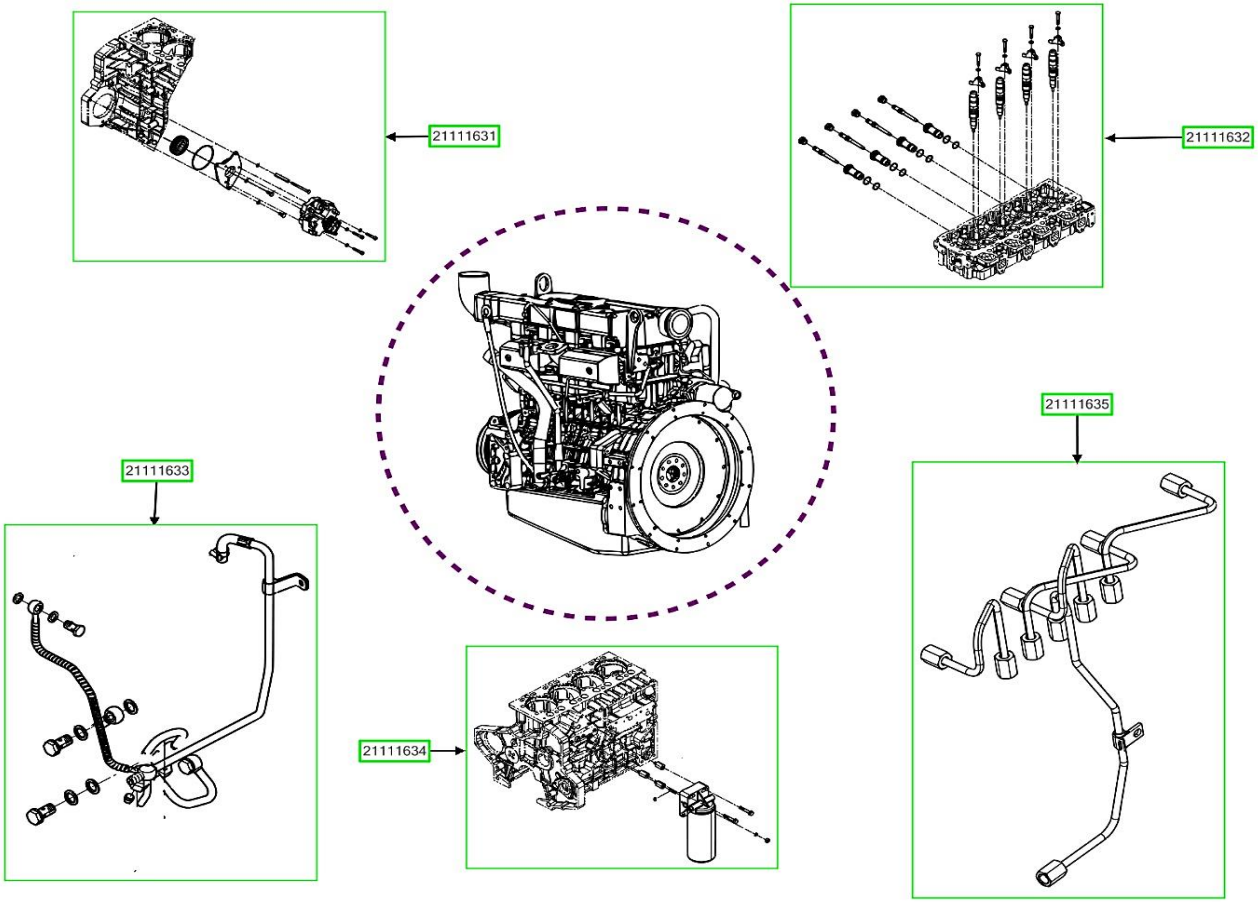

NAME_ASSB	CODE_PART NO	NAME	QTY
FUEL SYSTEM	21111631	HIGH PRESSURE PUMP GROUP	1
	21111632	FUEL INJECTOR GROUP	1
	21111633	LOW PRESSURE FUEL PIPE GROUP	1
	21111634	FUEL FILTER GROUP	1
	21111635	HIGH PRESSURE PIPE SET	1

NAME_ASSB	CODE_PART NO	NAME	QTY
FUEL SYSTEM			

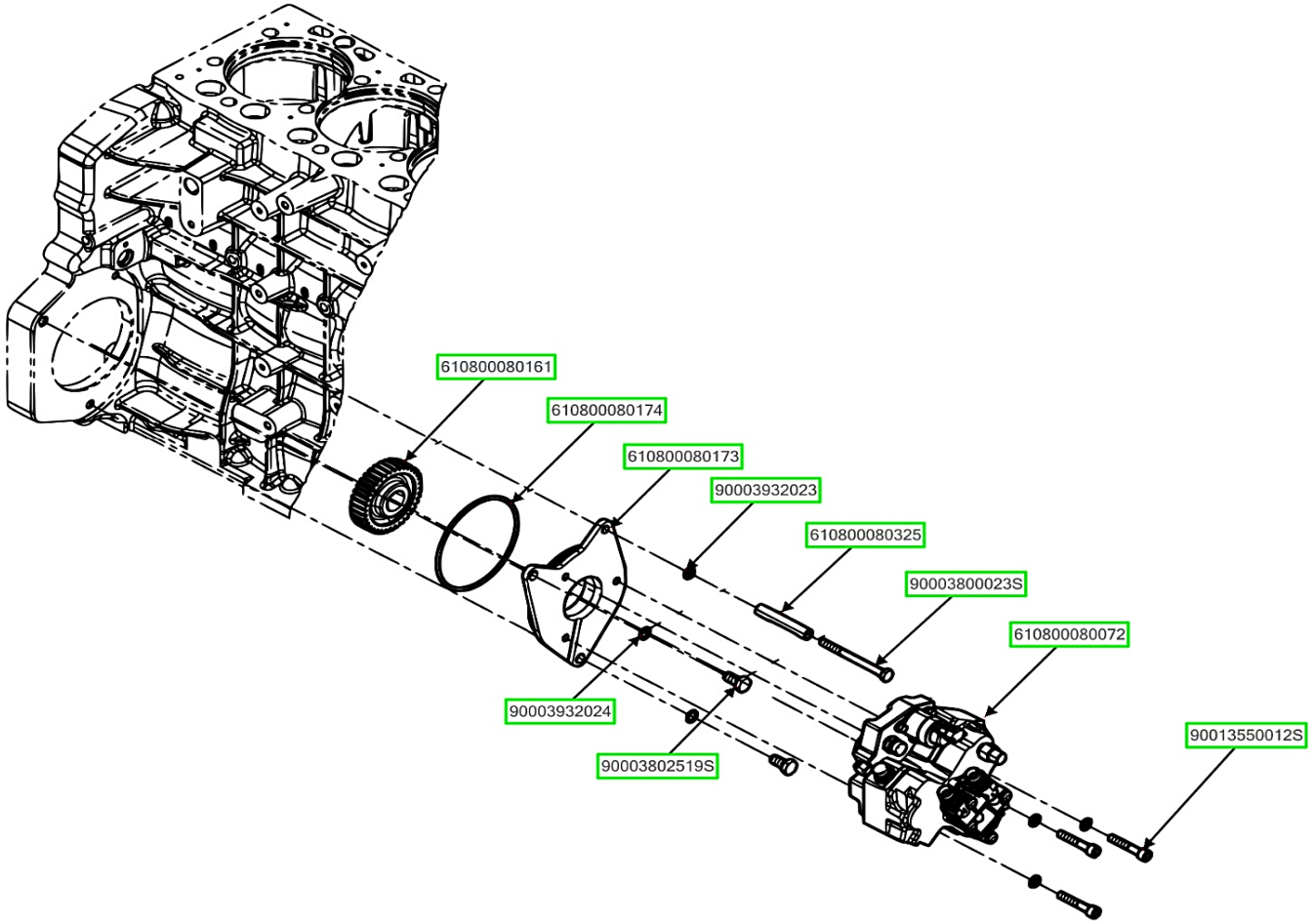

NAME_ASSB	CODE_PART NO	NAME	QTY
HIGH PRESSURE PUMP GROUP	610800080161	AIR COMPRESSOR GEAR	1
	610800080174	O-RING	1
	610800080173	FUEL INJECTION PUMP FLANGE	1
	90003932023	WAVE SPRING WASHER	4
	90003932024	WASHER	2
	610800080325	SLEEVE	1
	90003802519S	HEXAGON HEAD BOLT	2

NAME_ASSB	CODE_PART NO	NAME	QTY
HIGH PRESSURE PUMP GROUP	90003800023S	HEXAGON HEAD BOLT	1
	610800080072	FUEL INJECTION PUMP	1
	90013550012S	HEXAGON HEAD BOLT	3

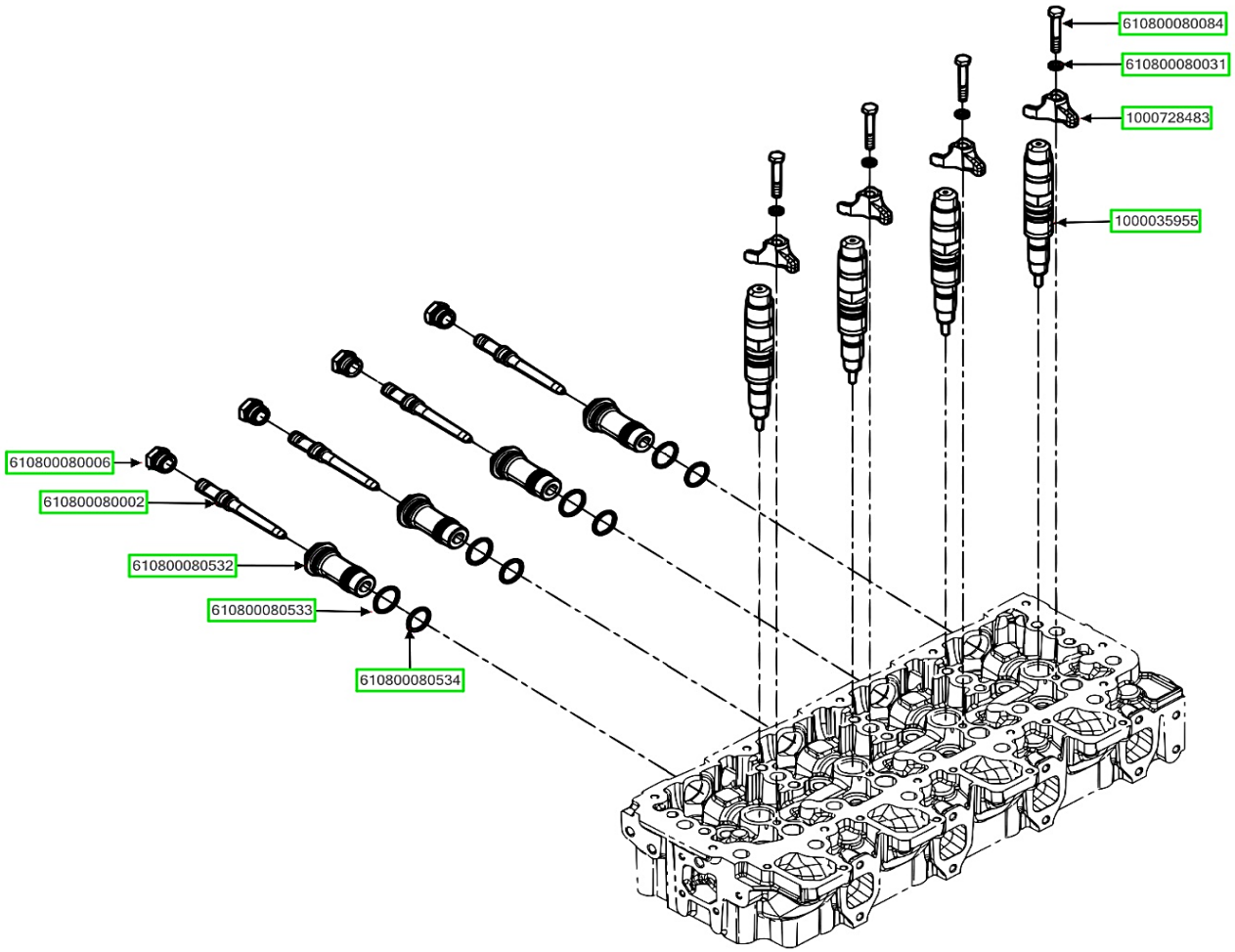

NAME_ASSB	CODE_PART NO	NAME	QTY
FUEL INJECTOR GROUP	610800080084	HEXAGON HEAD BOLT	4
	610800080031	WASHER WITH BALL FACE	4
	1000728483	FUEL INJECTOR CLAMP	4
	1000035955	FUEL INJECTOR	4
	610800080534	O-RING	4
	610800080533	O-RING	4
	610800080532	THREAD SLEEVE	4

NAME_ASSB	CODE_PART NO	NAME	QTY
FUEL INJECTOR GROUP	610800080002	HIGH-PRESSURE CONNECTOR	4
	610800080006	BOLT	4

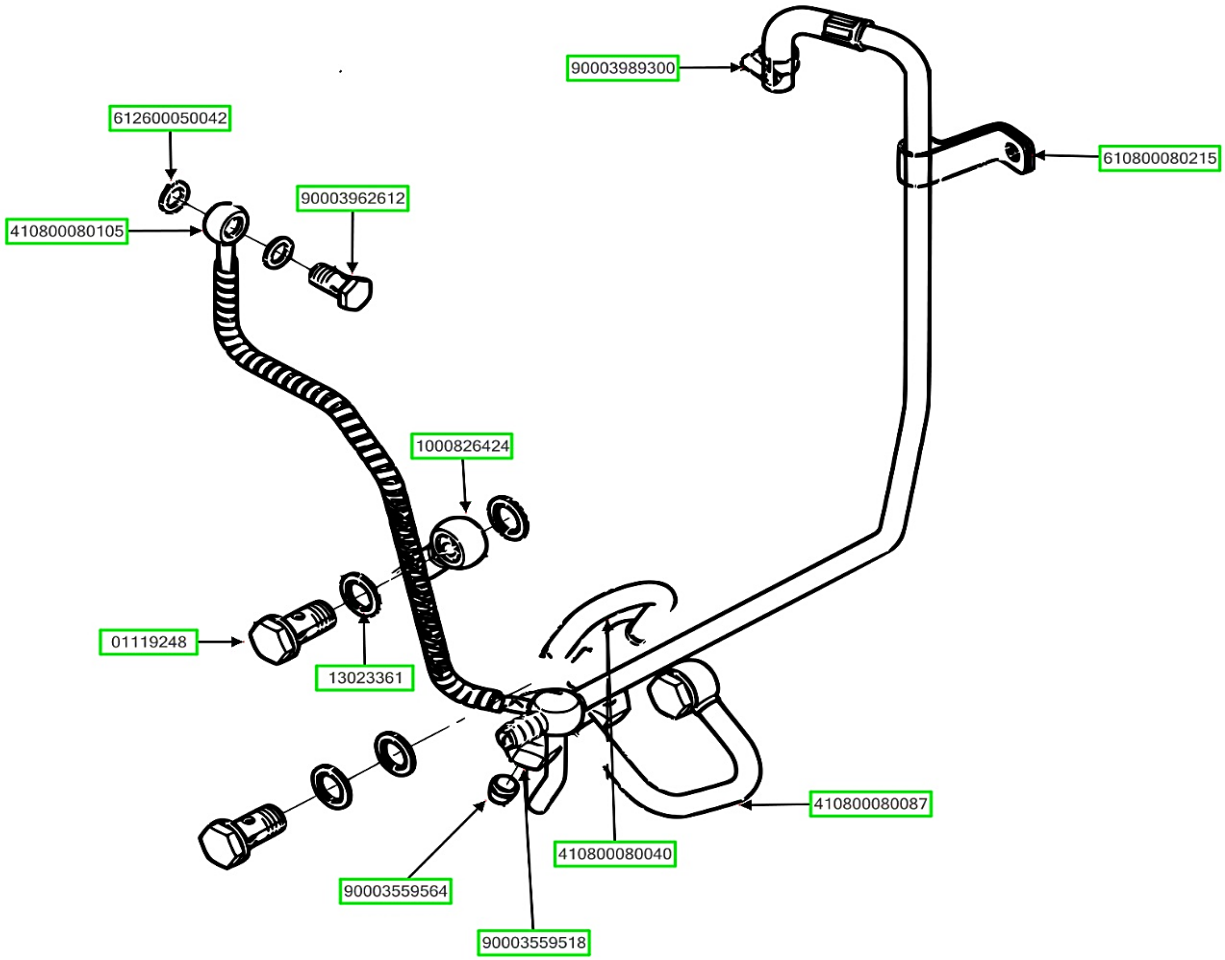

NAME_ASSB	CODE_PART NO	NAME	QTY
LOW PRESSURE FUEL PIPE GROUP	612600050042	WAVE SPRING WASHER	2
	410800080105	FUEL RETURN PIPE ASSEMBLY	1
	90003962612	HOLLOW SCREW	1
	90003989300	CLAMP	1
	610800080215	PIPE CLAMP ASSEMBLY	1
	410800080087	FUEL-INLET PIPE ASSEMBLY	1
	410800080040	PUMP-FILTER PIPE	1

NAME_ASSB	CODE_PART NO	NAME	QTY
LOW PRESSURE FUEL PIPE GROUP	90003559518	BOLT	4
	90003559564	FERRULE	4
	1000826424	CONECTOR	1
	13023361	ASSEMBLED SEALING WASHER	4
	01119248	HOLLOW SCREW	2

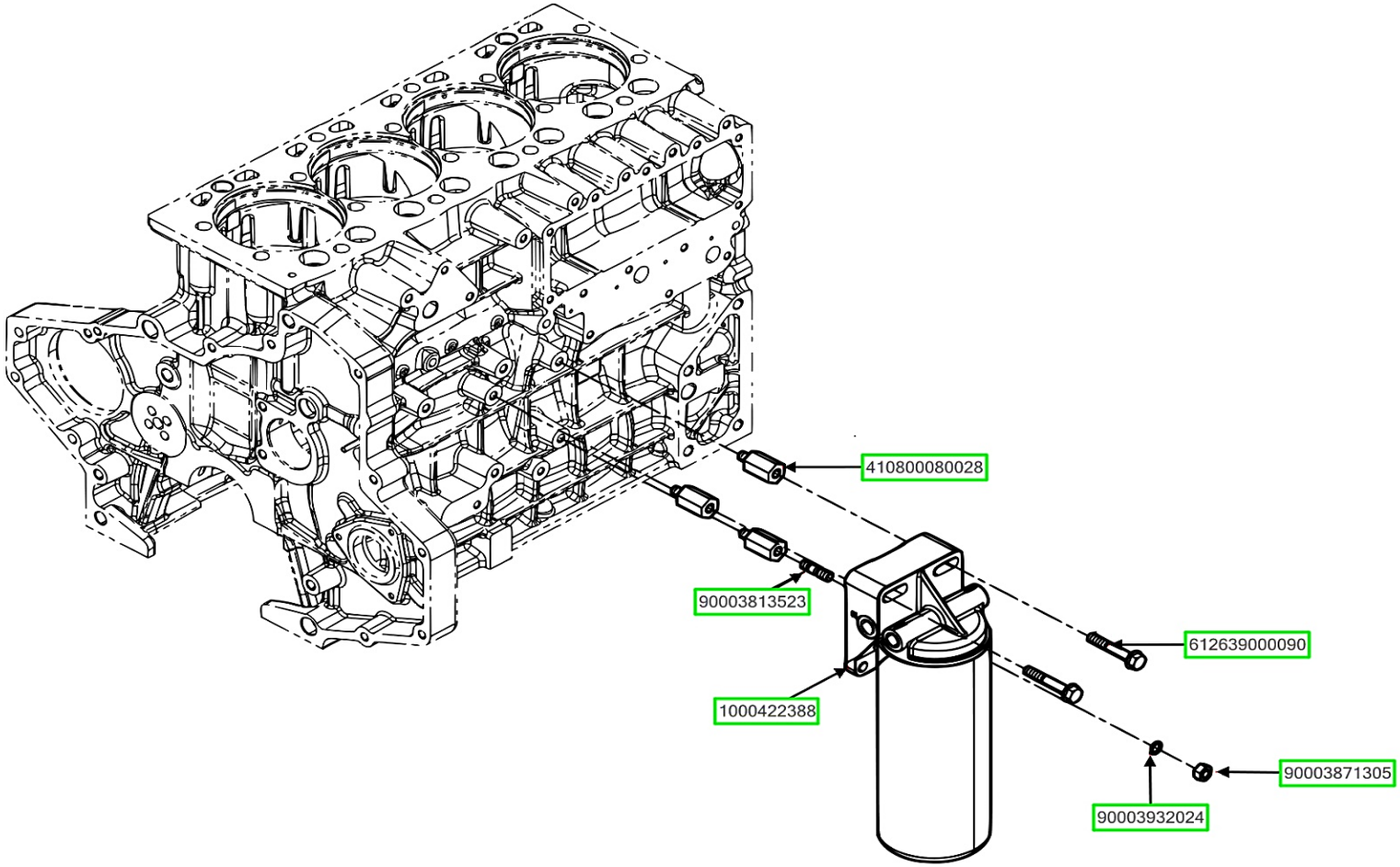

NAME_ASSB	CODE_PART NO	NAME	QTY
FUEL FILTER GROUP	410800080028	SCREW	3
	612639000090	HEXAGON HEAD BOLT	2
	90003871305	HEXAGON NUTS, STYLE 1	1
	90003932024	WASHER WITH BALL FACE	1
	1000422388	FUEL FINE FILTER	1
	90003813523	DOUBLE END STUD	1

NAME_ASSB	CODE_PART NO	NAME	QTY
FUEL FILTER GROUP			

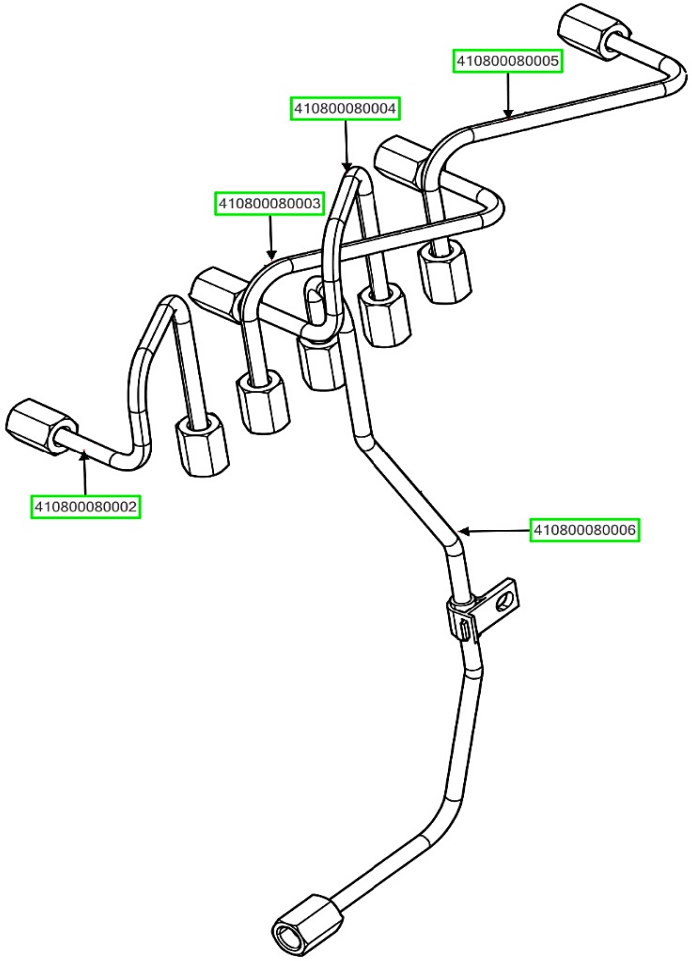

NAME_ASSB	CODE_PART NO	NAME	QTY
HIGH PRESSURE PIPE SET	410800080002	HIGH-PRESSURE FUEL PIPE ASSEMBLY	1
	410800080003	HIGH-PRESSURE FUEL PIPE ASSEMBLY	1
	410800080004	HIGH-PRESSURE FUEL PIPE ASSEMBLY	1
	410800080005	HIGH-PRESSURE FUEL PIPE ASSEMBLY	1
	410800080006	PUMP TO RAIL HIGH-PRESSURE FUEL PIPE	1

NAME_ASSB	CODE_PART NO	NAME	QTY
HIGH PRESSURE PIPE SET			

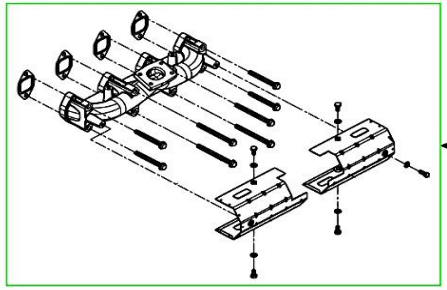

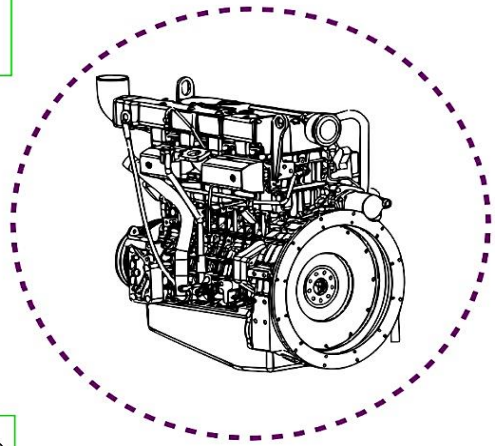

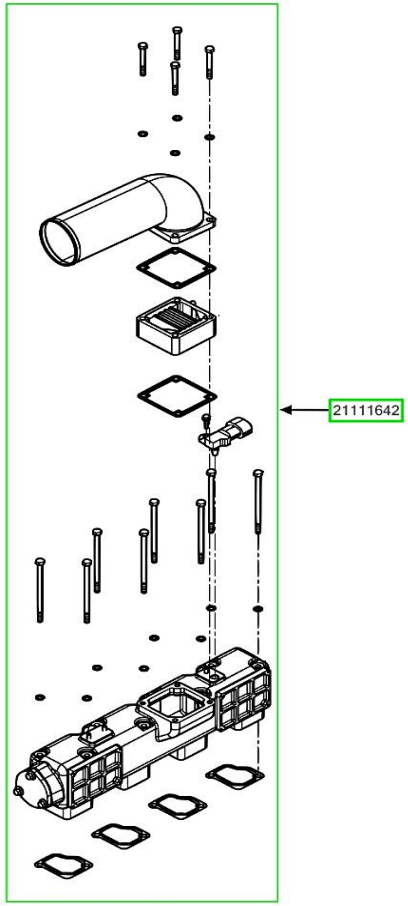

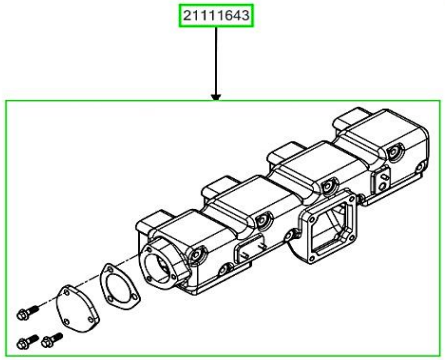

NAME_ASSB	CODE_PART NO	NAME	QTY
INTAKE/EXHAUST SYSTEM	21111641	EXHAUST MANIFOLD GROUP	1
	21111642	INTAKE MANIFOLD GROUP	1
	21111643	TURBOCHARGER GROUP	1

NAME_ASSB	CODE_PART NO	NAME	QTY
INTAKE/EXHAUST SYSTEM			

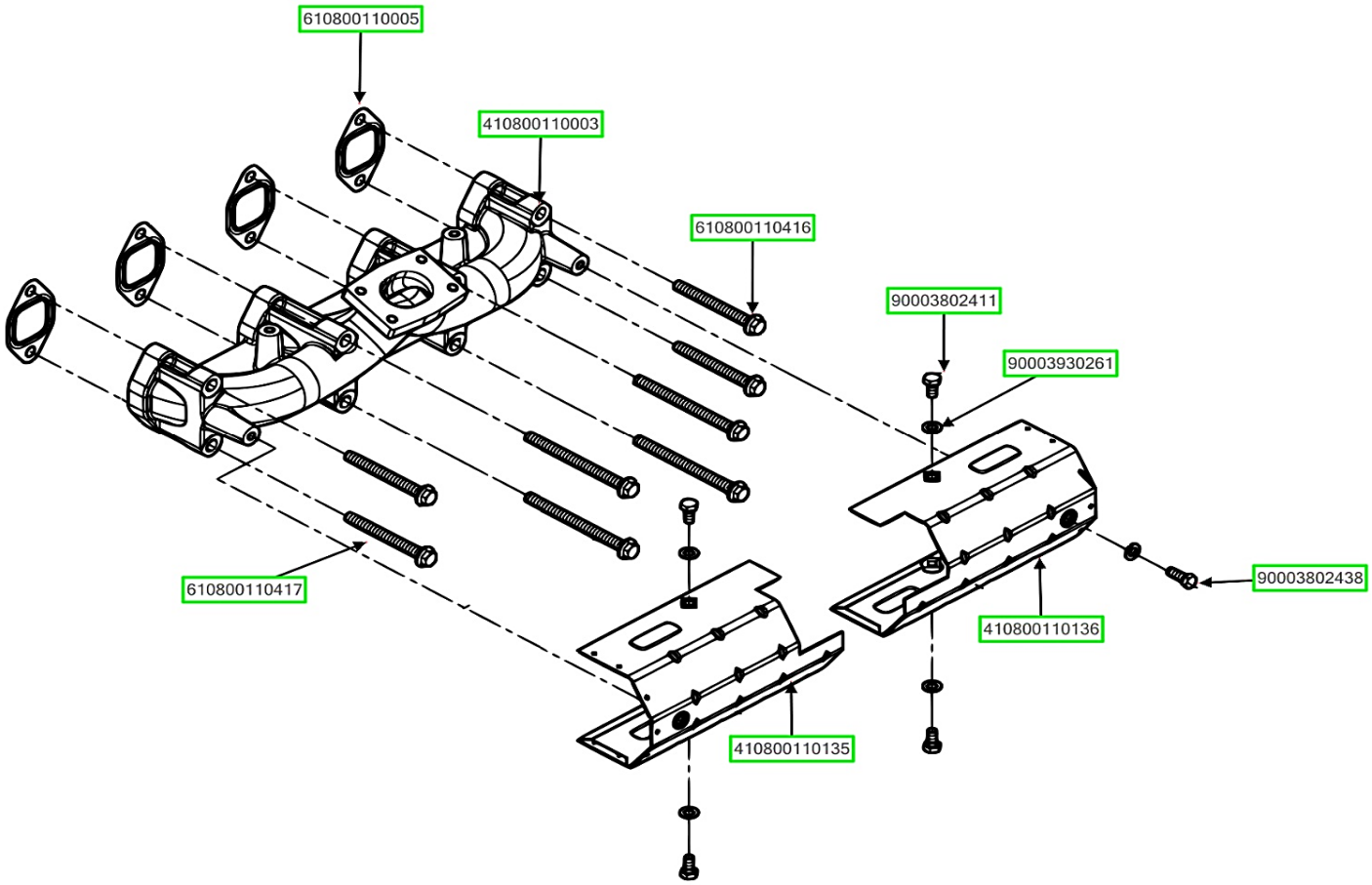

NAME_ASSB	CODE_PART NO	NAME	QTY
EXHAUST MANIFOLD GROUP	610800110005	O-RING	4
	410800110003	EXHAUST MANIFOLD	1
	610800110416	HEXAGON FLANGE BOLT	4
	90003802411	HEXAGON FLANGE BOLT	4
	90003930261	WAVE SPRING WASHER	5
	90003802438	HEXAGON HEAD BOLT	1
	410800110136	EXHAUST MANIFOLD HEAT SHIELD	1

NAME_ASSB	CODE_PART NO	NAME	QTY
EXHAUST MANIFOLD GROUP	410800110135	EXHAUST MANIFOLD HEAT SHIELD	1
	610800110417	HEXAGON FLANGE BOLT	4

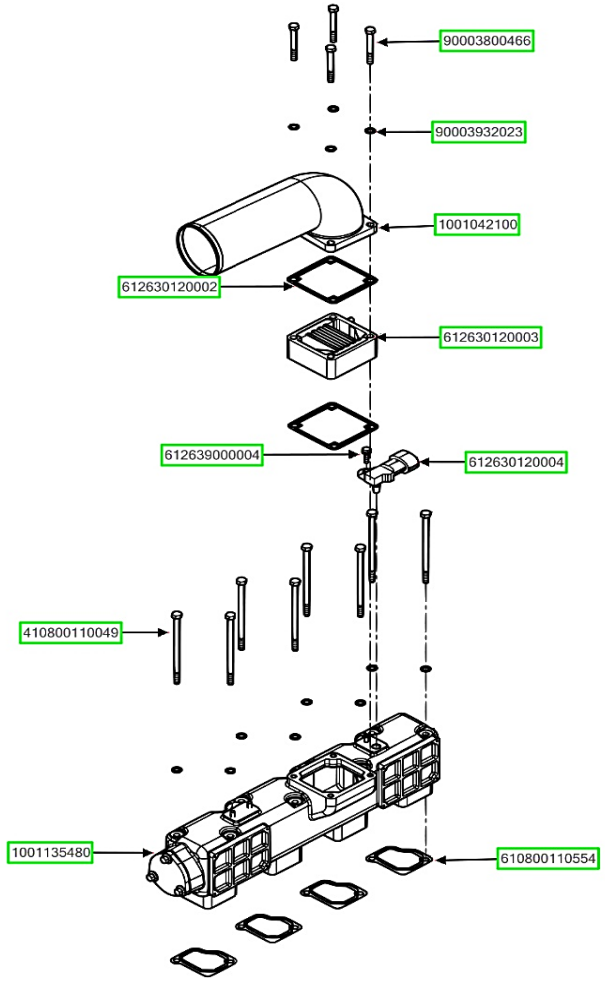

NAME_ASSB	CODE_PART NO	NAME	QTY
INTAKE MANIFOLD GROUP	90003800466	HEXAGON HEAD BOLT	4
	90003932023	WAVE SPRING WASHER	12
	1001042100	PIPE	1
	612630120002	GASKET	2
	612630120003	HEATER	1
	612639000004	HEXAGON HEAD BOLT	1
	612630120004	PRESSURE AND TEMPERATURE SENSOR	1

NAME_ASSB	CODE_PART NO	NAME	QTY
INTAKE MANIFOLD GROUP	410800110049	HEXAGON HEAD BOLT	8
	1001135480	INTAKE MANIFOLD ASSEMBLY	1
	610800110554	O-RING	4

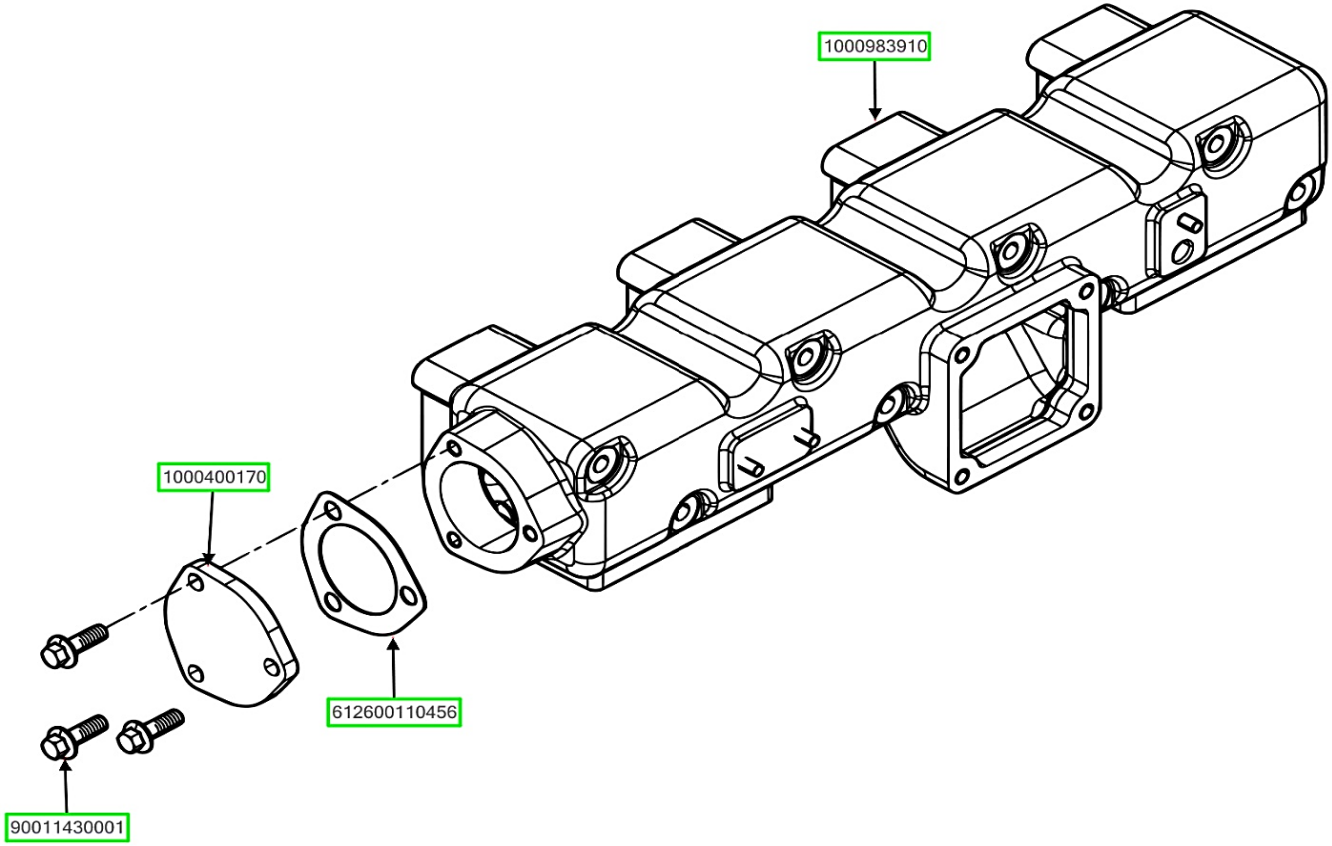

NAME_ASSB	CODE_PART NO	NAME	QTY
TURBOCHARGER GROUP	90011430001	HEXAGON HEAD BOLT	3
	1000400170	INTAKE COVER	1
	612600110456	O-RING	1
	1000983910	INTAKE MANIFOLD	1

NAME_ASSB	CODE_PART NO	NAME	QTY
TURBOCHARGER GROUP			

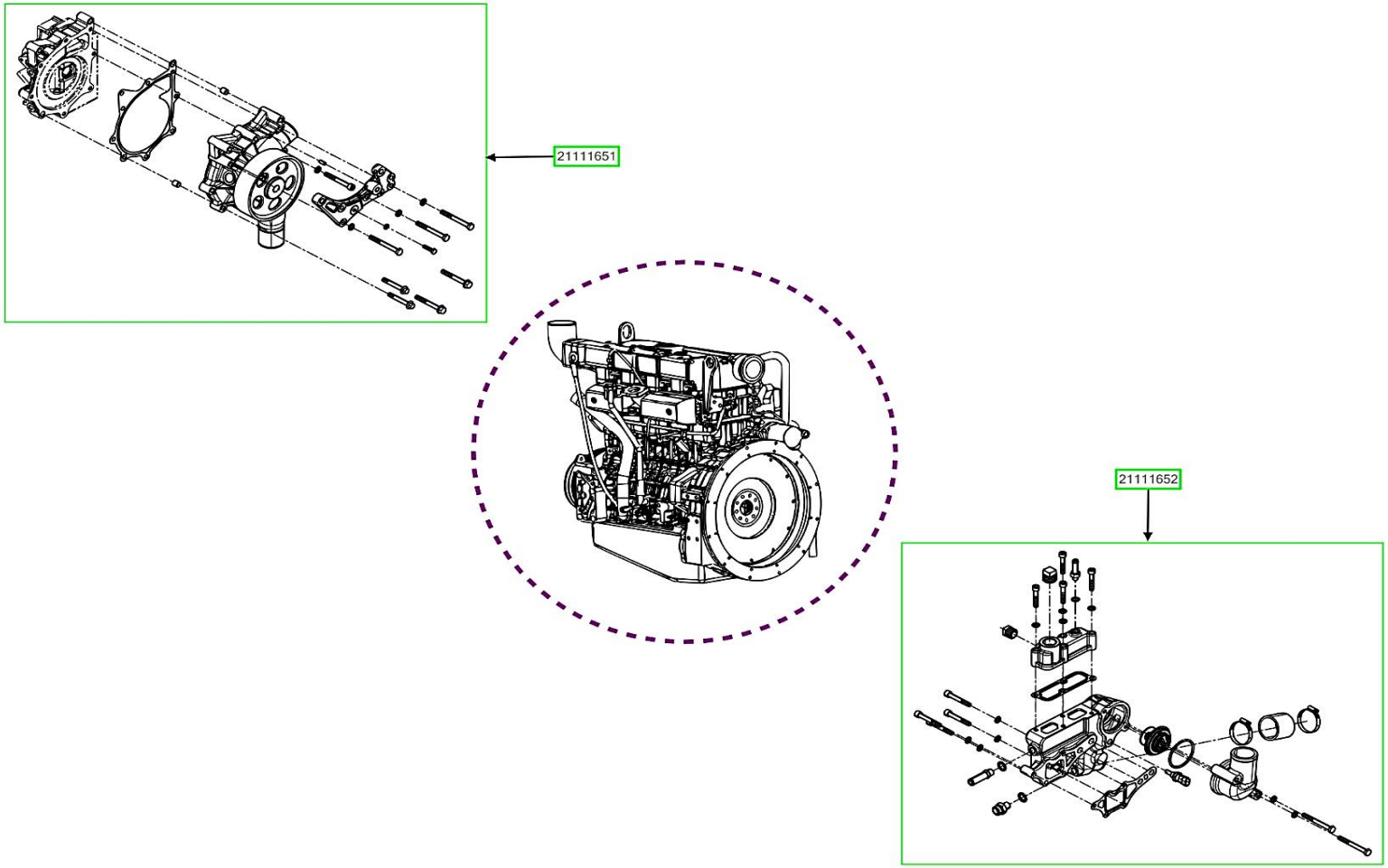

NAME_ASSB	CODE_PART NO	NAME	QTY
COLLING SYSTEM	21111651	WATER PUMP GROUP	1
	21111652	WATER OUTLET PIPE GROUP	1

NAME_ASSB	CODE_PART NO	NAME	QTY
COLLING SYSTEM			

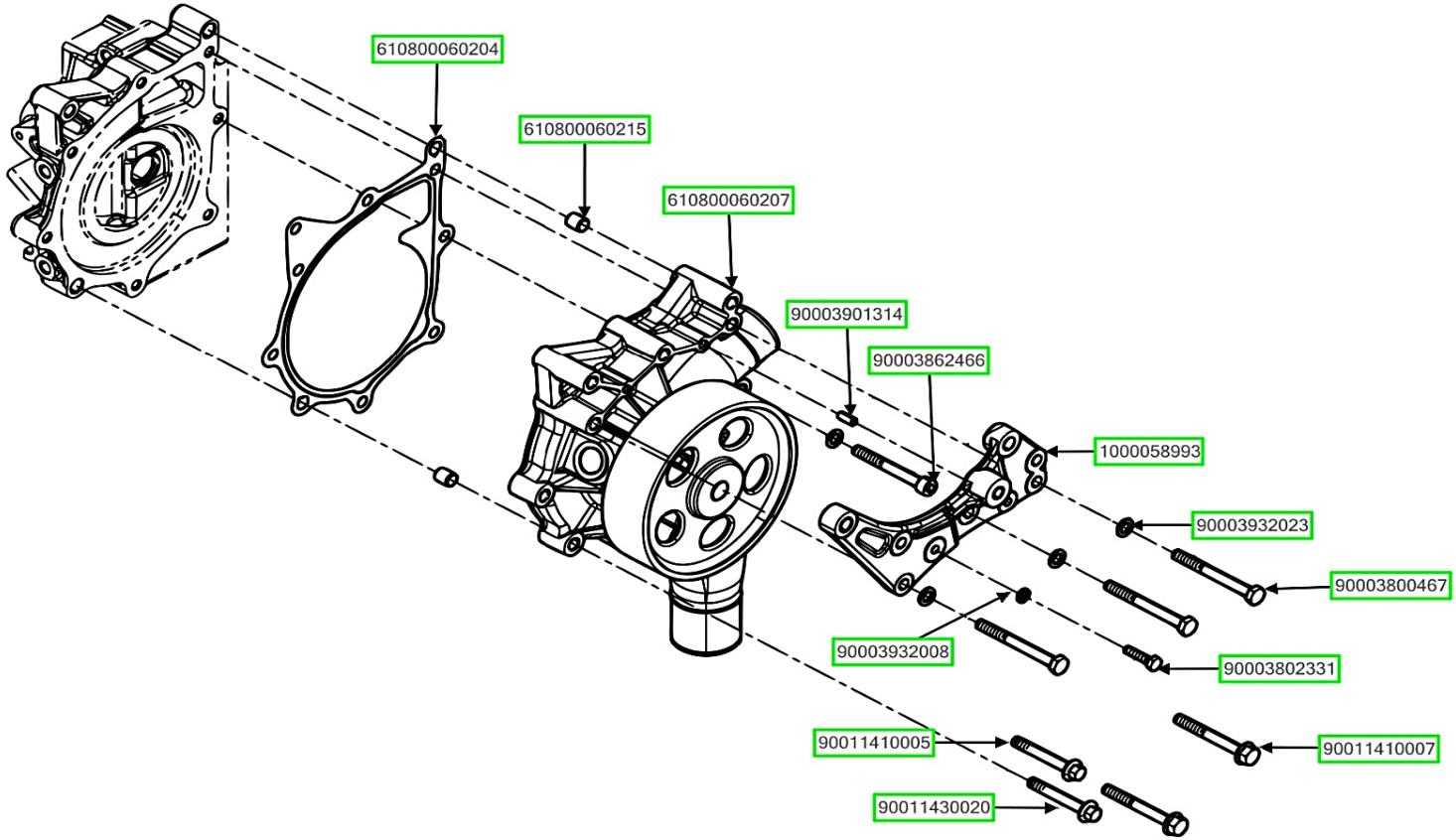

NAME_ASSB	CODE_PART NO	NAME	QTY
WATER PUMP GROUP	610800060204	O-RING	1
	610800060215	DOWEL PIN	2
	610800060207	WATER PUMP	1
	90003901314	DOWEL PIN	1
	90003862466	INNER HEXAGON SOCKET HEAD CAP SCREW	1
	1000058993	ALTERNATOR BRACKET	1
	90003932023	WAVE SPRING WASHER	4

NAME_ASSB	CODE_PART NO	NAME	QTY
WATER PUMP GROUP	90011410007	HEXAGON HEAD BOLT	2
	90011430020	HEXAGON HEAD BOLT	1
	90011410005	HEXAGON HEAD BOLT	1
	90003802331	HEXAGON HEAD BOLT	1
	90003932008	WASHER WITH BALL FACE	1

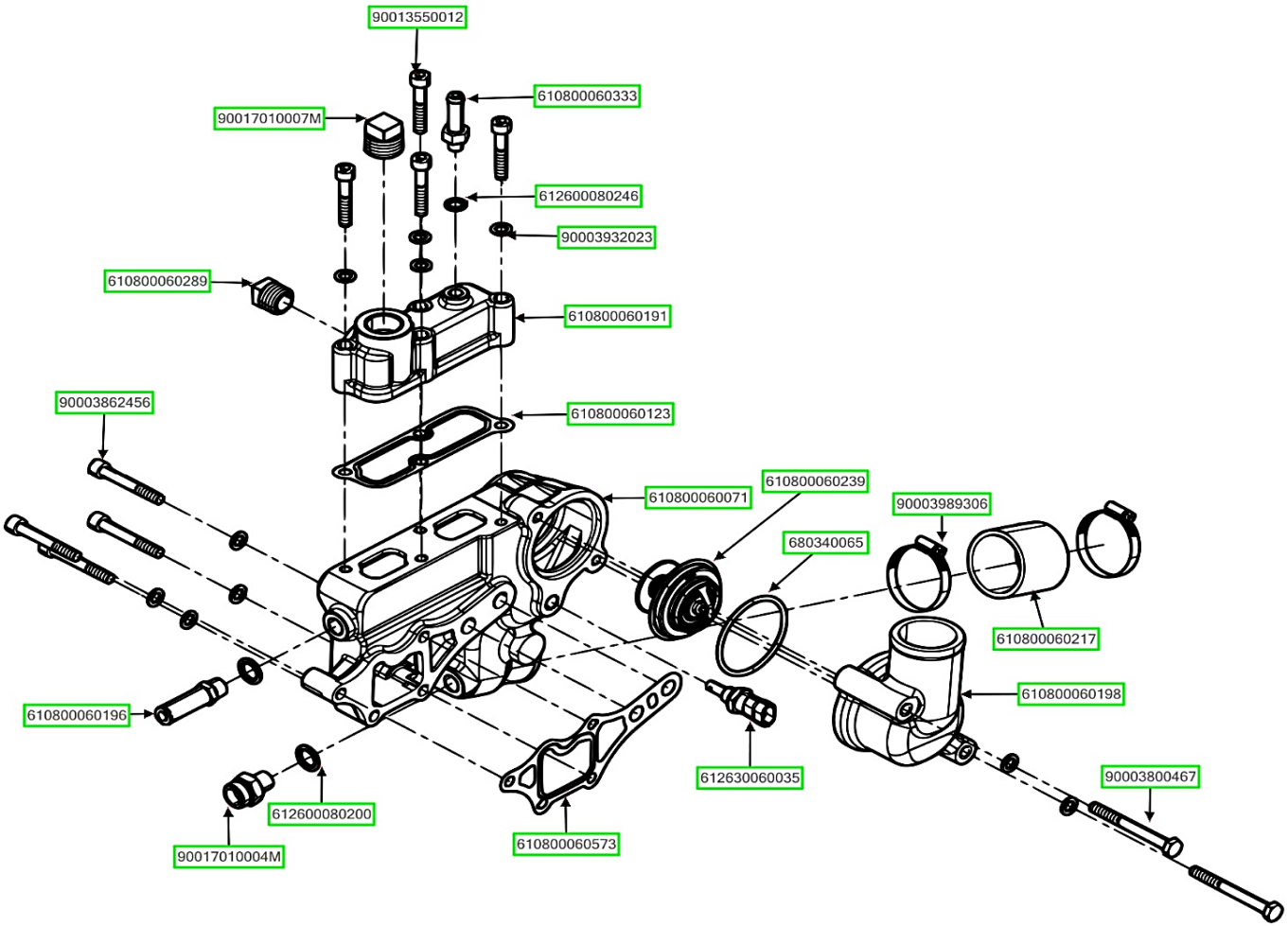

NAME_ASSB	CODE_PART NO	NAME	QTY
WATER OUTLET PIPE GROUP	610800060333	HEXAGON HEAD BOLT	2
	612600080246	85S NAME 1051	2
	610800060289	WAVE SPRING WASHER	2
	610800060191	WAVE SPRING WASHER	2
	610800060217	COVER	2
	610800060239	O-RING	2
	680340065	JUCTION VALVE	2

NAME_ASSB	CODE_PART NO	NAME	QTY
WATER OUTLET PIPE GROUP	610800060071	THERMOSTAT	2
	90003800467	85S NAME 1058	4
	612630060035	CLAMP	2
	612600080200	CONECTOR PIPE	3
	610800060198	WAVE SPRING WASHER	1
	610800060123	PIPE	2
	610800060573	HEXAGON HEAD BOLT	2

NAME_ASSB	CODE_PART NO	NAME	QTY
WATER OUTLET PIPE GROUP	90003862456	SENSOR	8
	610800060196	GASKET	1
	90017010004M	GASKET	1
	90017010007M	COREHOLE PLUG 14/10	1

NAME_ASSB	CODE_PART NO	NAME	QTY
WATER OUTLET PIPE GROUP			

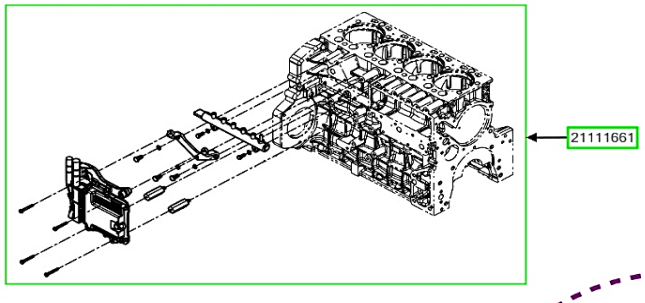

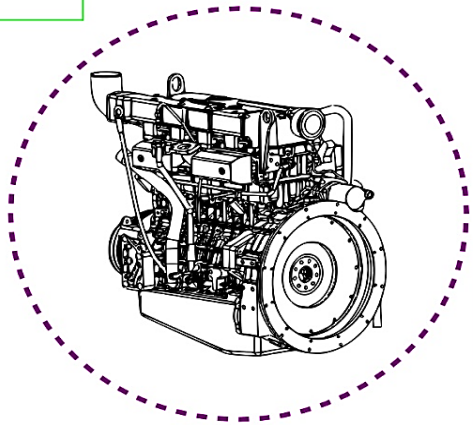

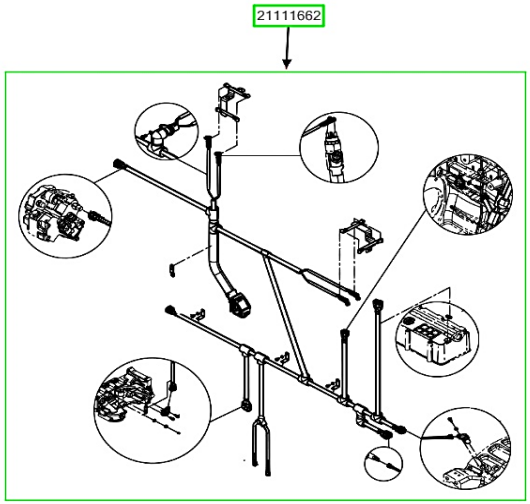

NAME_ASSB	CODE_PART NO	NAME	QTY
SENSOR ELECTRIC SYSTEM	21111661	COMMON RAIL SYSTEM ASSEMBLY	1
	21111662	ELECTRONIC CONTROL SYSTEM HARNESS AND SENSOR GROUP	1

NAME_ASSB	CODE_PART NO	NAME	QTY
SENSOR ELECTRIC SYSTEM			

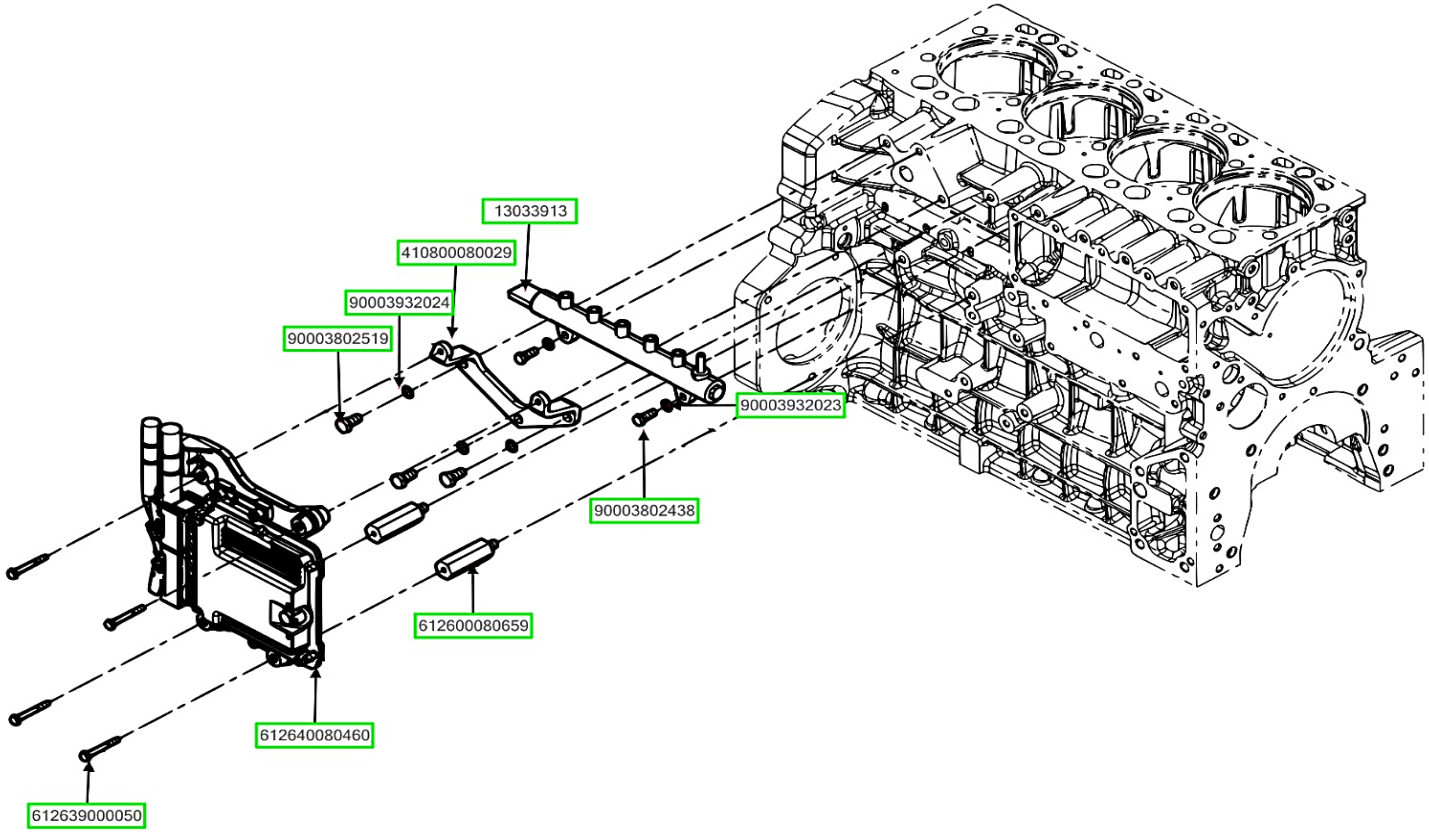

NAME_ASSB	CODE_PART NO	NAME	QTY
COMMON RAIL SYSTEM ASSEMBLY	13033913	RAIL	1
	90003932023	WAVE SPRING WASHER	2
	90003802438	HEXAGON HEAD BOLT	2
	612600080659	BOLT	2
	612640080460	ELECTRONIC CONTROL UNIT	1
	612639000050	HEXAGON HEAD BOLT	4
	90003802519	HEXAGON HEAD BOLT	3

NAME_ASSB	CODE_PART NO	NAME	QTY
COMMON RAIL SYSTEM ASSEMBLY	90003932024	WASHER	3
	410800080029	BRACKET	1

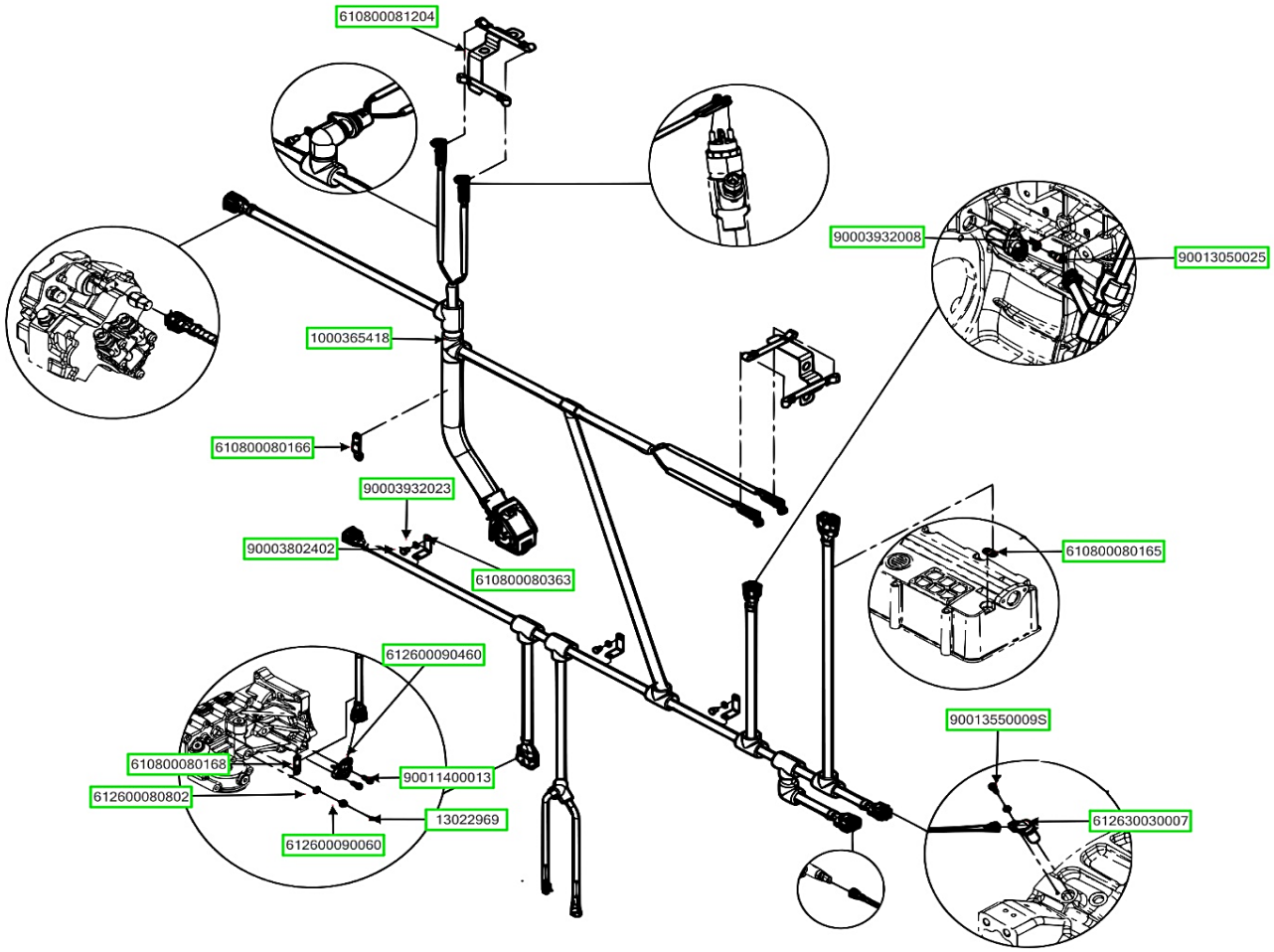

NAME_ASSB	CODE_PART NO	NAME	QTY
ELECTRONIC CONTROL AND SENSOR SYSTEM	610800080165	BRACKET	1
	90013550009S	HEXAGON HEAD BOLT	1
	612630030007	SPEED SENSOR	2
	13022969	SCREW PLUG	1
	612600090060	OIL PRESSURE SENSOR JOINT	1
	612600080802	WASHER	1
	610800080168	BRACKET	1

NAME_ASSB	CODE_PART NO	NAME	QTY
ELECTRONIC CONTROL AND SENSOR SYSTEM	90011400013	HEXAGON HEAD BOLT	2
	612600090460	PRESSURE AND TEMPERATURE SENSOR	1
	90003932023	WAVE SPRING WASHER	3
	90003802402	HEXAGON HEAD BOLT	3
	610800080363	BRACKET	3
	610800080166	BRACKET	1
	1000365418	ENGINE HARNESS	1

NAME_ASSB	CODE_PART NO	NAME	QTY
ELECTRONIC CONTROL AND SENSOR SYSTEM	610800081204	BRACKET	2
	90003932008	SPRING WASHER	4
	90013050025	HEXAGON HEAD BOLT	3

NAME_ASSB	CODE_PART NO	NAME	QTY
ELECTRONIC CONTROL AND SENSOR SYSTEM			

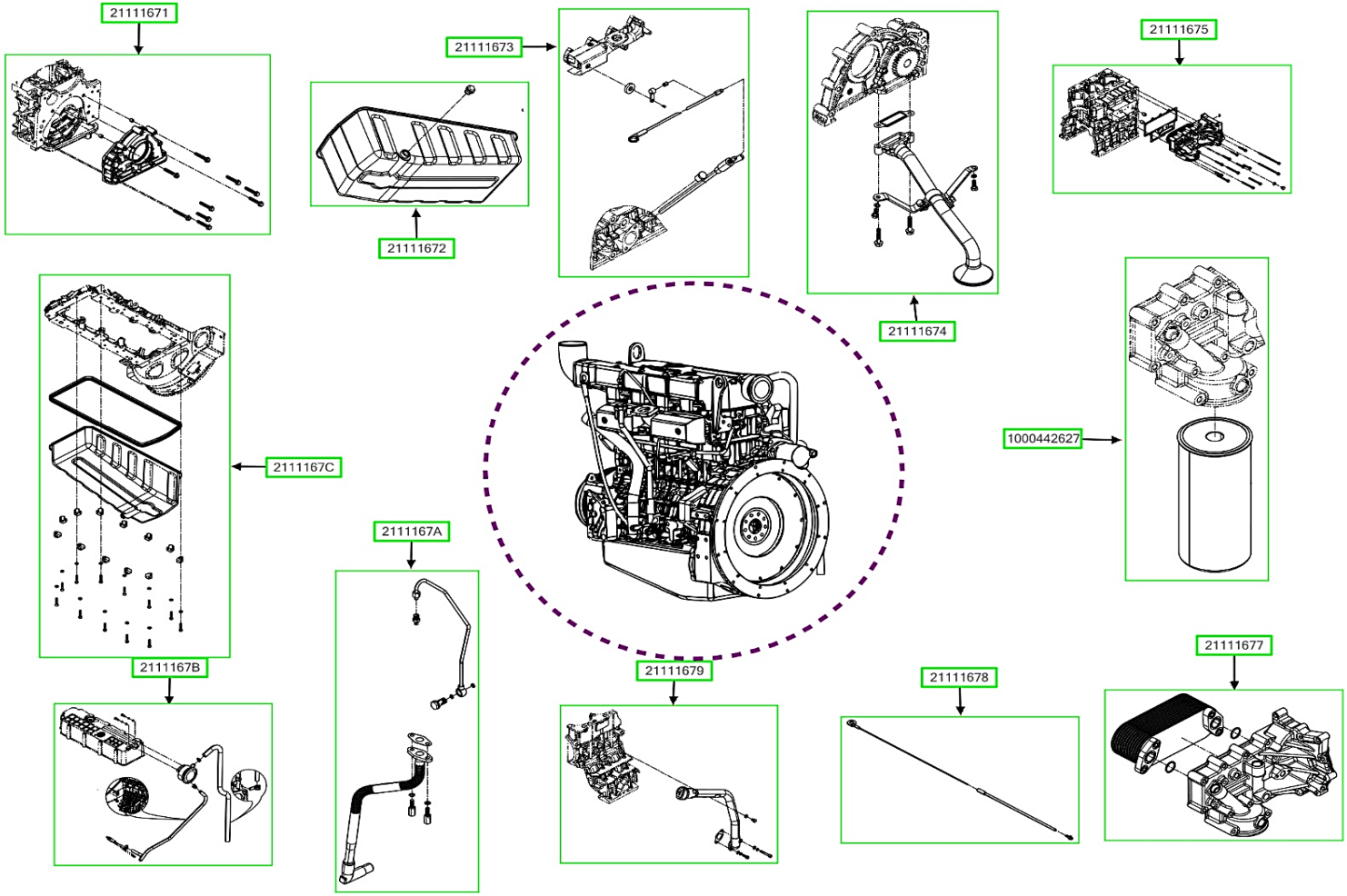

NAME_ASSB	CODE_PART NO	NAME	QTY
LUBRICATION SYSTEM	21111671	OIL PUMP GROUP	1
	21111672	OIL PAN ASSEMBLY	1
	21111673	OIL DIPSTICK GROUP	1
	21111674	OIL STRAINER GROUP	1
	21111675	OIL COOLER GROUP	1
	1000442627	OIL FILTER ASSEMBLY	1
	21111677	OIL COOLER ASSEMBLY	1

NAME_ASSB	CODE_PART NO	NAME	QTY
LUBRICATION SYSTEM	21111678	DIPSTICK PIPE UPPER SET	1
	21111679	OIL FILLING TUBE GROUP	1
	2111167A	TURBOCHARGER OIL PIPE GROUP	1
	2111167B	OIL-GAS SEPARATOR GROUP	1
	2111167C	OIL PAN GROUP	1

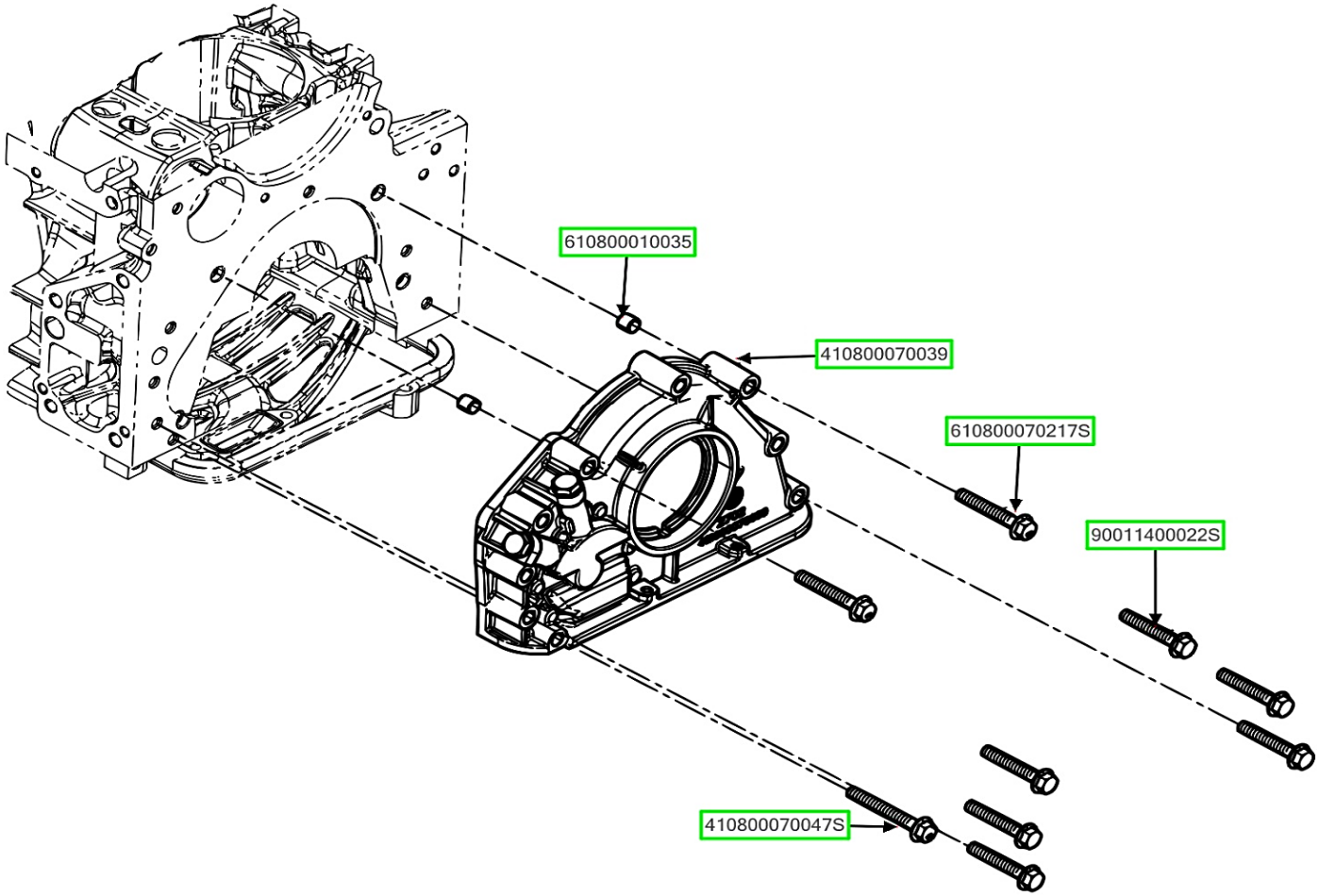

NAME_ASSB	CODE_PART NO	NAME	QTY
OIL PUMP GROUP	610800010035	DOWEL PIN	2
	410800070039	LUBRICATING OIL PUMP	1
	610800070217S	HEXAGON HEAD BOLT	2
	90011400022S	HEXAGON HEAD BOLT	6
	410800070047S	HEXAGON HEAD BOLT	1

NAME_ASSB	CODE_PART NO	NAME	QTY
OIL PUMP GROUP			

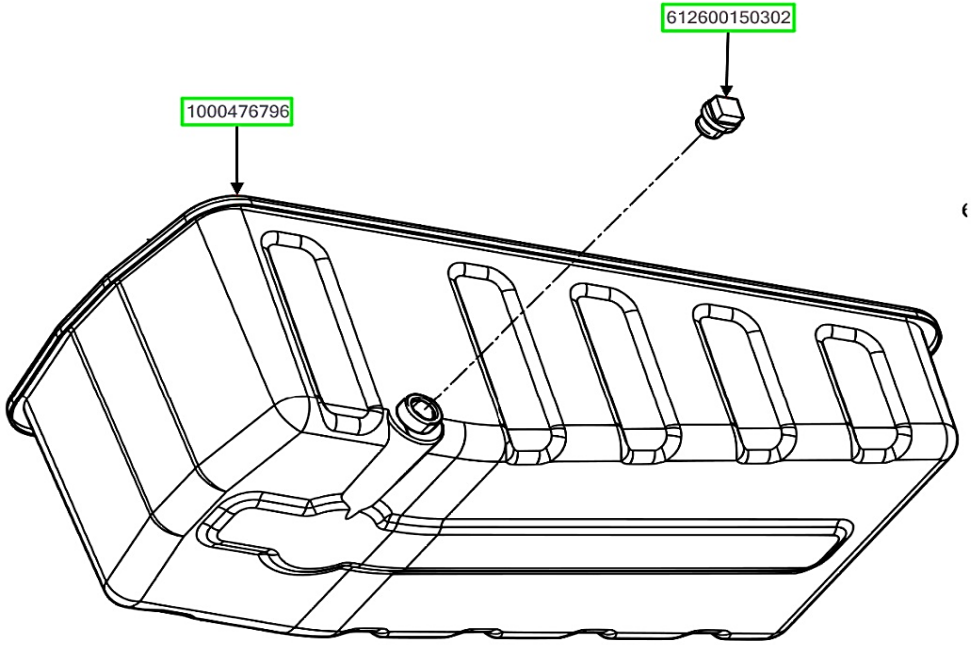

NAME_ASSB	CODE_PART NO	NAME	QTY
OIL PAN ASSEMBLY	1000476796	OIL PAN SET	1
	612600150302	MAGNETIC SCREW PLUG ASSEMBLY	1

NAME_ASSB	CODE_PART NO	NAME	QTY
OIL PAN ASSEMBLY			

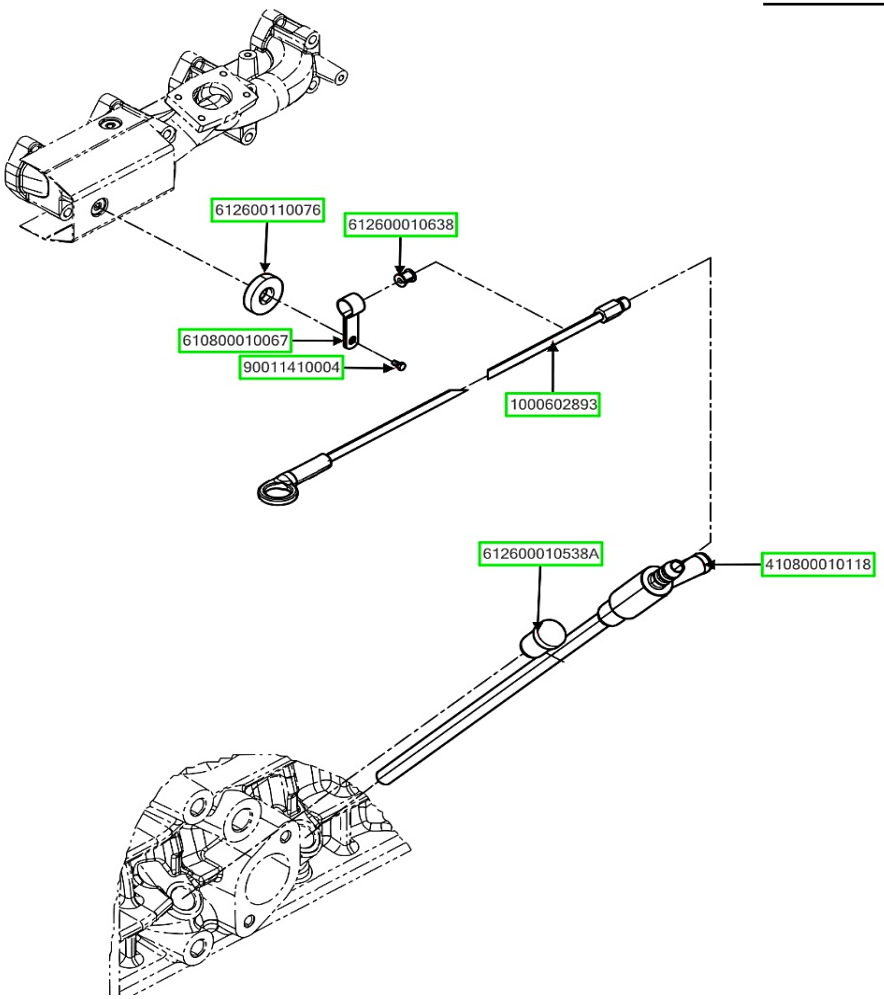

NAME_ASSB	CODE_PART NO	NAME	QTY
OIL DIPSTICK GROUP	612600110076	WASHER	1
	610800010067	PIPE CLAMP	1
	90011410004	HEXAGON HEAD BOLT	1
	612600010638	RUBBER HOOP	1
	1000602893	OIL DIPSTICK GROUP	1
	410800010118	CONECTOR PIPE	1
	612600010538A	DIPSTICK PIPE CONNECTOR	2

NAME_ASSB	CODE_PART NO	NAME	QTY
OIL DIPSTICK GROUP			

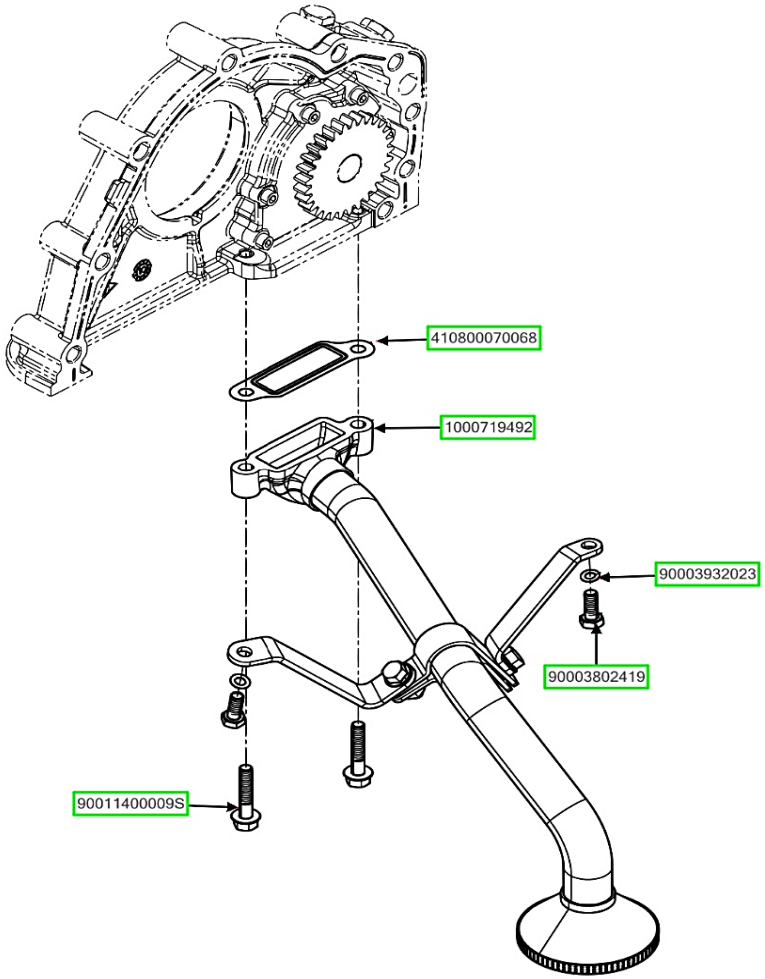

NAME_ASSB	CODE_PART NO	NAME	QTY
OIL STRAINER GROUP	410800070068	O-RING	1
	1000719492	FILTER ASSEMBLY	1
	90003932023	WAVE SPRING WASHER	2
	90003802419	HEXAGON HEAD BOLT	2
	90011400009S	HEXAGON HEAD BOLT	2

NAME_ASSB	CODE_PART NO	NAME	QTY
OIL STRAINER GROUP			

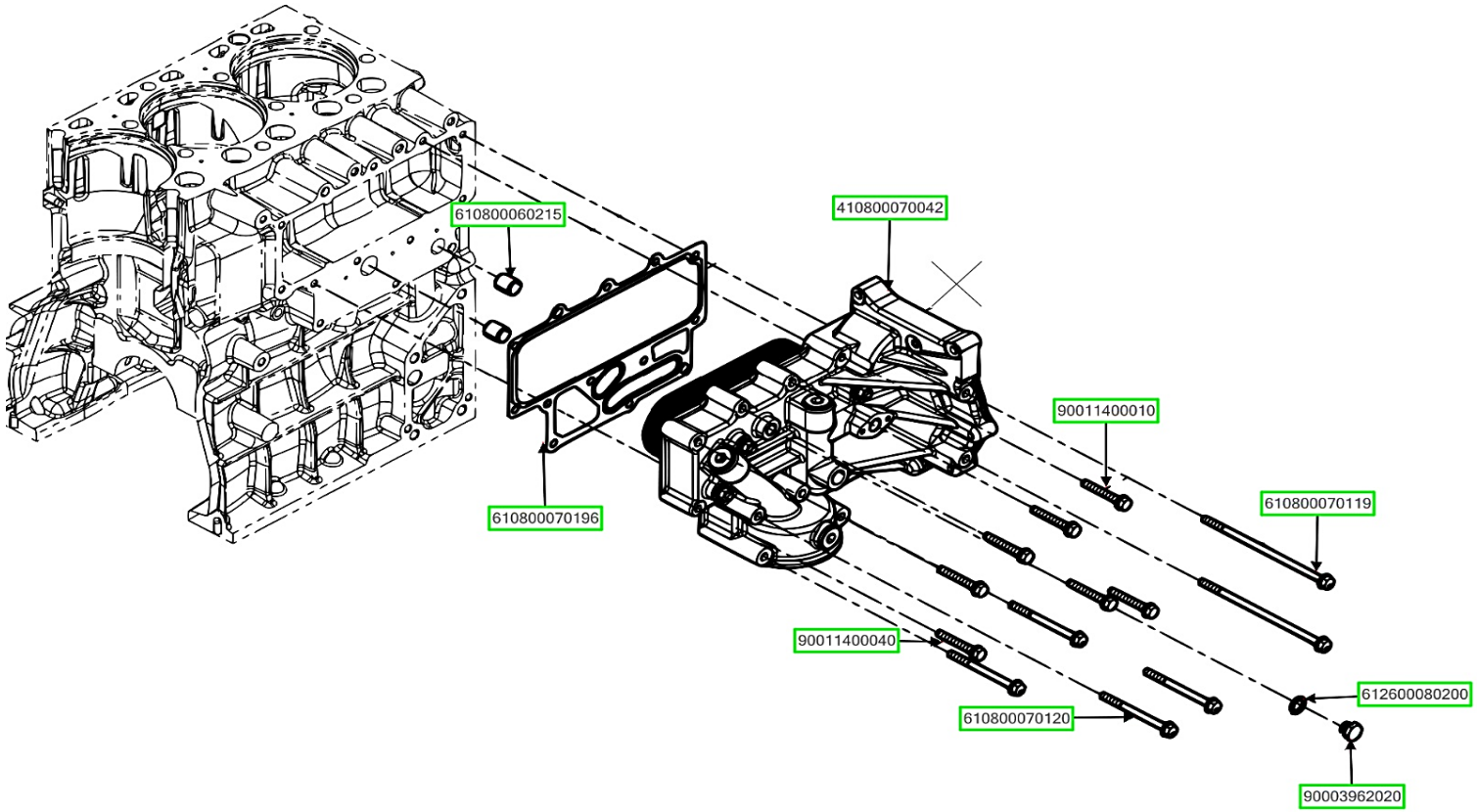

NAME_ASSB	CODE_PART NO	NAME	QTY
OIL COOLER GROUP	610800060215	DOWEL PIN	2
	610800070196	O-RING	1
	410800070042	OIL COOLER ASSEMBLY	1
	90011400010	HEXAGON HEAD BOLT	4
	610800070119	HEXAGON HEAD BOLT	2
	90003962020	HEXAGON HEAD BOLT	1
	612600080200	WAVE SPRING WASHER	1

NAME_ASSB	CODE_PART NO	NAME	QTY
OIL COOLER GROUP	610800070120	HEXAGON HEAD BOLT	4
	90011400040	HEXAGON HEAD BOLT	3

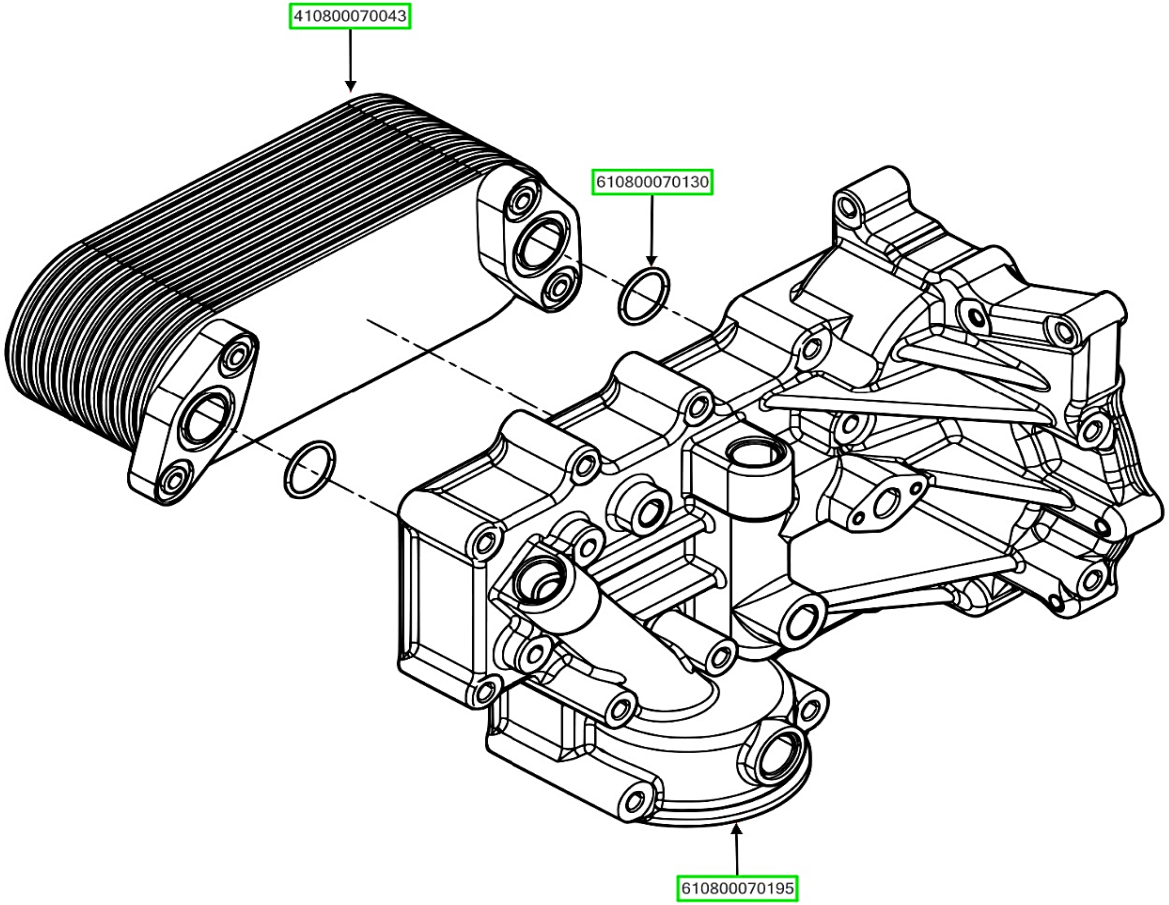

NAME_ASSB	CODE_PART NO	NAME	QTY
OIL COOLER ASSEMBLY	610800070195	OIL COOLER CAP	1
	610800070130	O-RING	2
	410800070043	OIL COOLER	1

NAME_ASSB	CODE_PART NO	NAME	QTY
OIL COOLER ASSEMBLY			

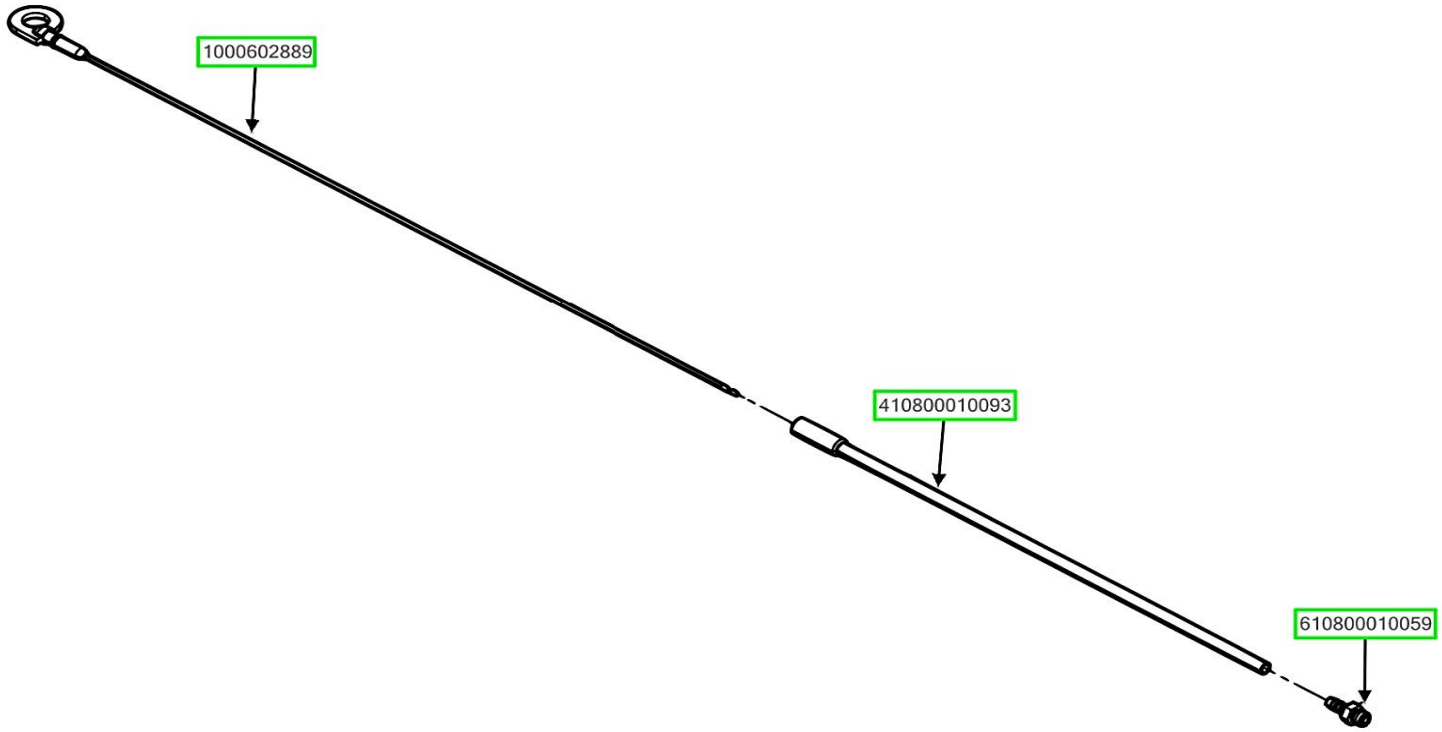

NAME_ASSB	CODE_PART NO	NAME	QTY
DIPSTICK PIPE UPPER SET	1000602889	OIL DIPSTICK GROUP	1
	410800010093	DIPSTICK PIPE SET	1
	610800010059	SCREW	1

NAME_ASSB	CODE_PART NO	NAME	QTY
DIPSTICK PIPE UPPER SET			

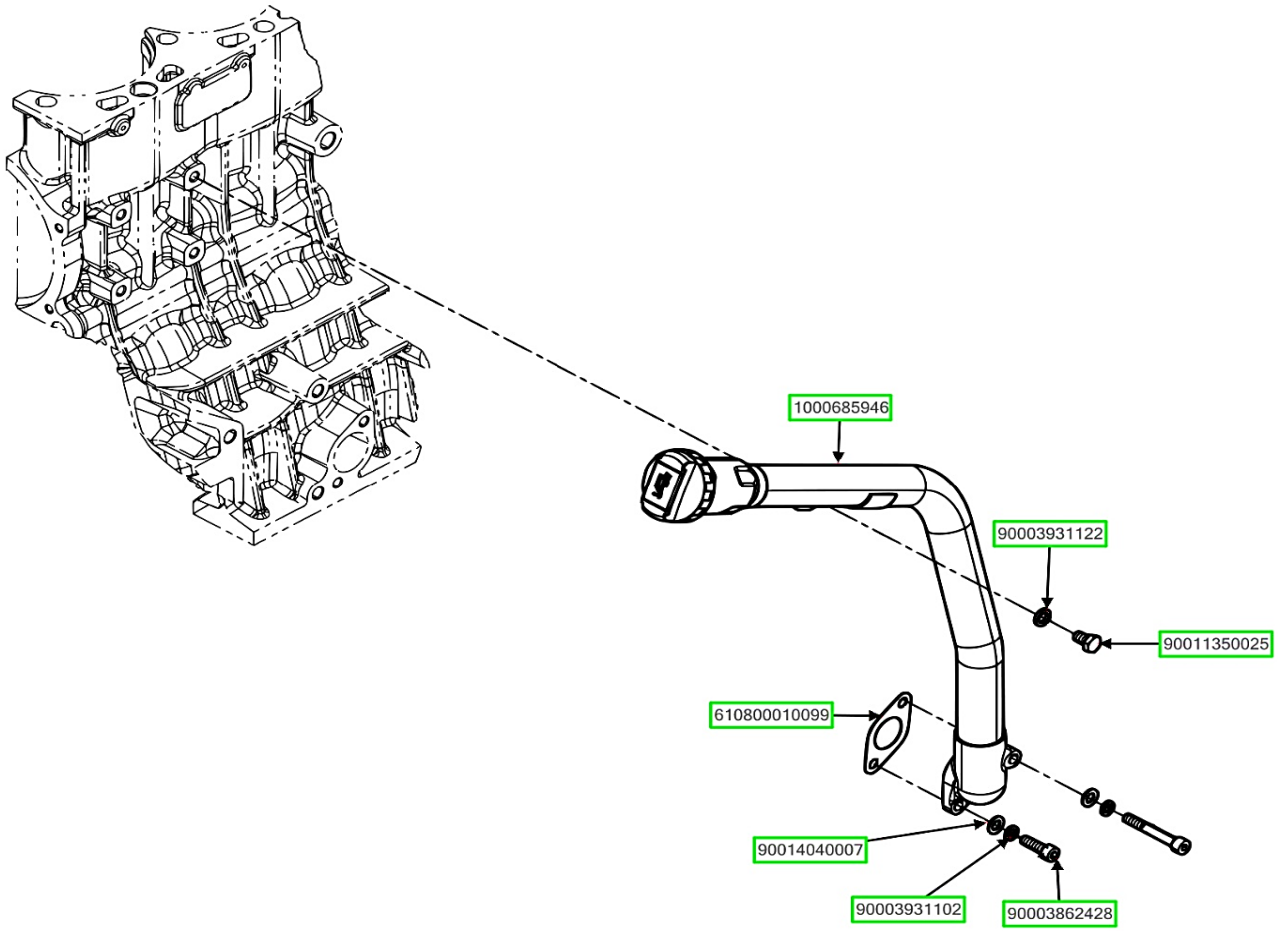

NAME_ASSB	CODE_PART NO	NAME	QTY
OIL FILLING TUBE GROUP	1000685946	DIPSTICK PIPE UPPER SET	1
	90003931122	WAVE SPRING WASHER	1
	90011350025	HEXAGON HEAD BOLT	1
	90003862428	HEXAGON HEAD BOLT	1
	90003931102	WAVE SPRING WASHER	2
	90014040007	WAVE SPRING WASHER	2
	610800010099	O-RING	1

NAME_ASSB	CODE_PART NO	NAME	QTY
OIL FILLING TUBE GROUP			

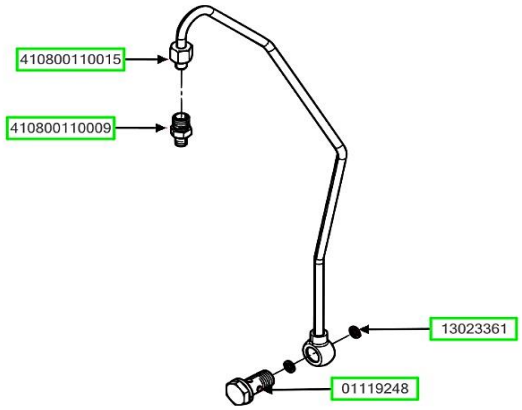

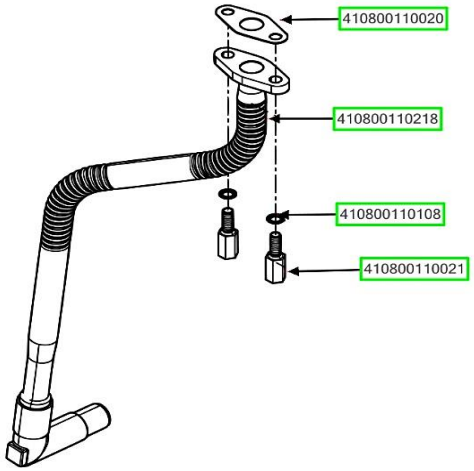

NAME_ASSB	CODE_PART NO	NAME	QTY
TURBOCHARGER OIL PIPE GROUP	410800110015	TURBOCHARGER OIL PIPE ASSEMBLY	1
	410800110009	FERRULE FACE STRAIGHT THREAD ELBOW-BODY	1
	13023361	O-RING	2
	01119248	BOLT	1
	410800110020	O-RING	1
	410800110218	TURBOCHARGER OIL PIPE ASSEMBLY	1
	410800110108	WASHER	2

NAME_ASSB	CODE_PART NO	NAME	QTY
TURBOCHARGER OIL PIPE GROUP	410800110021	HEXAGON HEAD BOLT	2

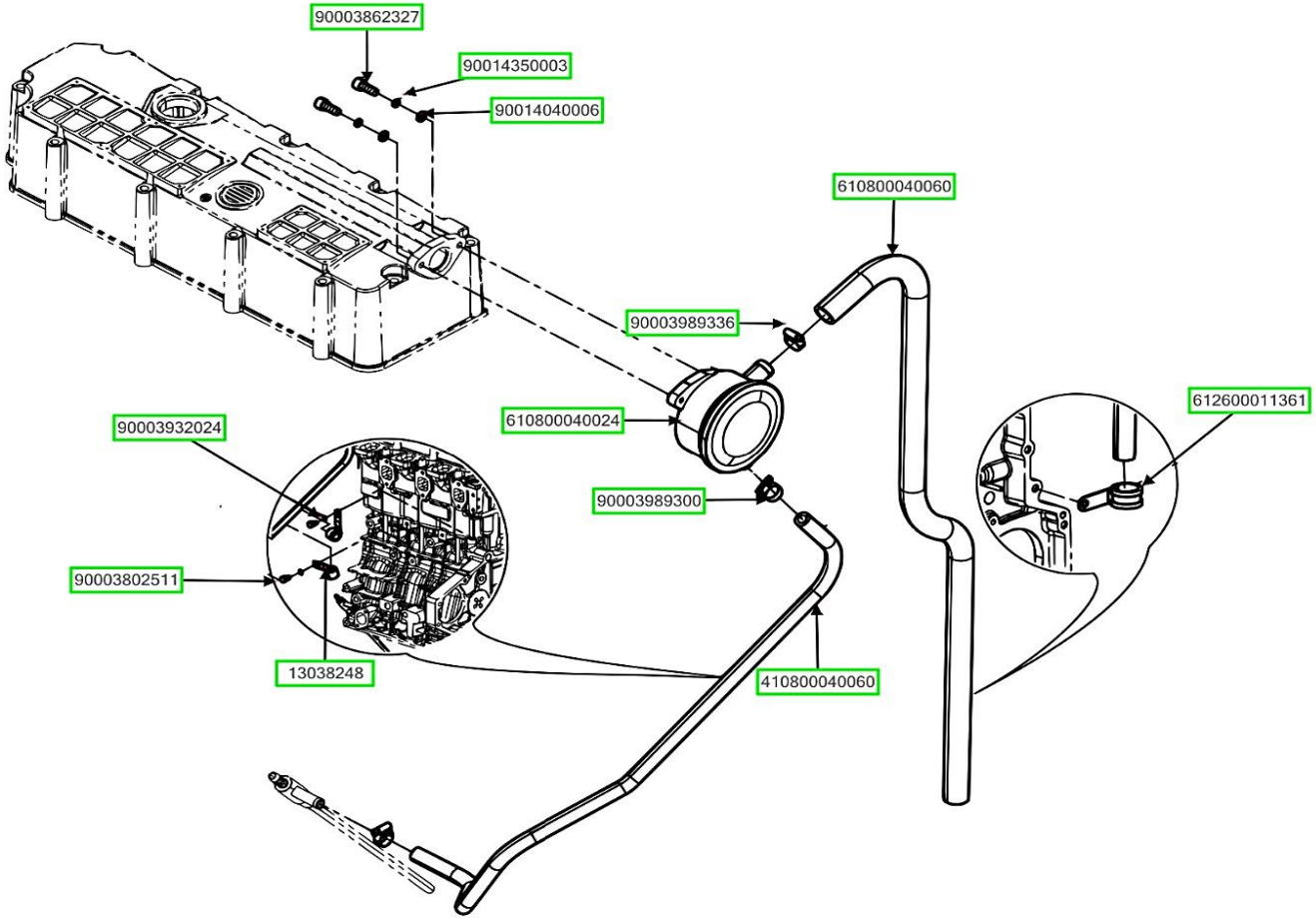

NAME_ASSB	CODE_PART NO	NAME	QTY
OIL-GAS SEPARATOR GROUP	90003862327	HEXAGON HEAD BOLT	2
	90014350003	SPRING WASHER	2
	90014040006	WASHER WITH BALL FACE	2
	610800040060	OIL CONNECTING RUBBER PIPE	1
	90003989336	CLAMP	1
	610800040024	OIL-GAS SEPARATOR ASSEMBLY	1
	90003989300	CLAMP	2

NAME_ASSB	CODE_PART NO	NAME	QTY
OIL-GAS SEPARATOR GROUP	410800040060	OIL CONNECTING RUBBER PIPE	1
	612600011361	PIPE CLAMP ASSEMBLY	1
	90003802511	HEXAGON HEAD BOLT	2
	13038248	PIPE CLAMP ASSEMBLY	2
	90003932024	WASHER	2

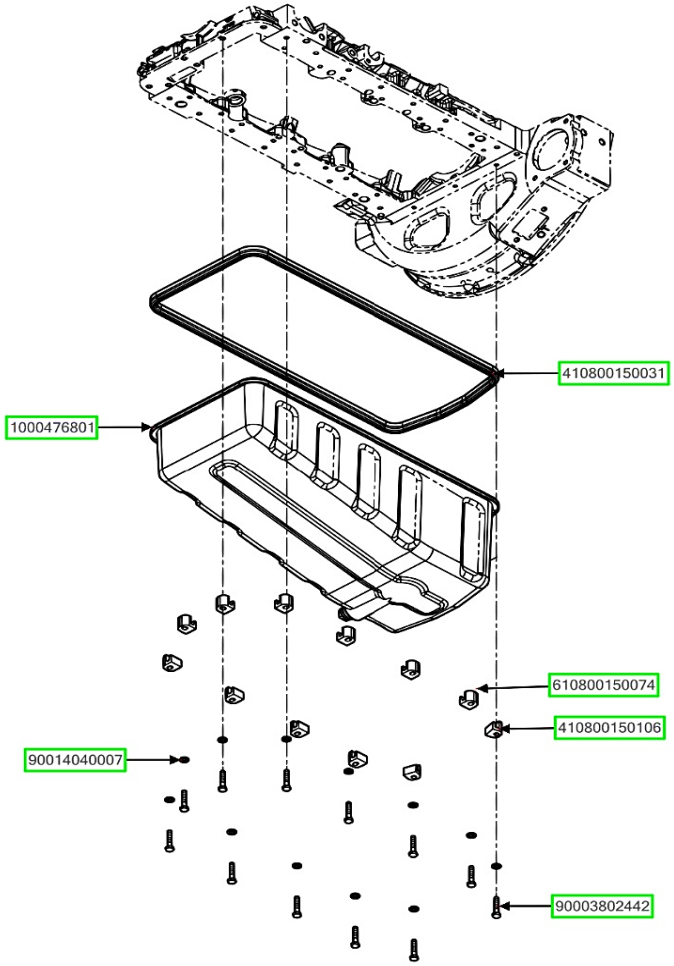

NAME_ASSB	CODE_PART NO	NAME	QTY
OIL PAN GROUP	410800150031	O-RING	1
	1000476801	OIL PAN SET	1
	610800150074	RETAINER OF OIL PAN	10
	410800150106	RETAINER OF OIL PAN	2
	90014040007	SPRING WASHER	12
	90003802442	HEXAGON HEAD BOLT	12

NAME_ASSB	CODE_PART NO	NAME	QTY
OIL PAN GROUP			

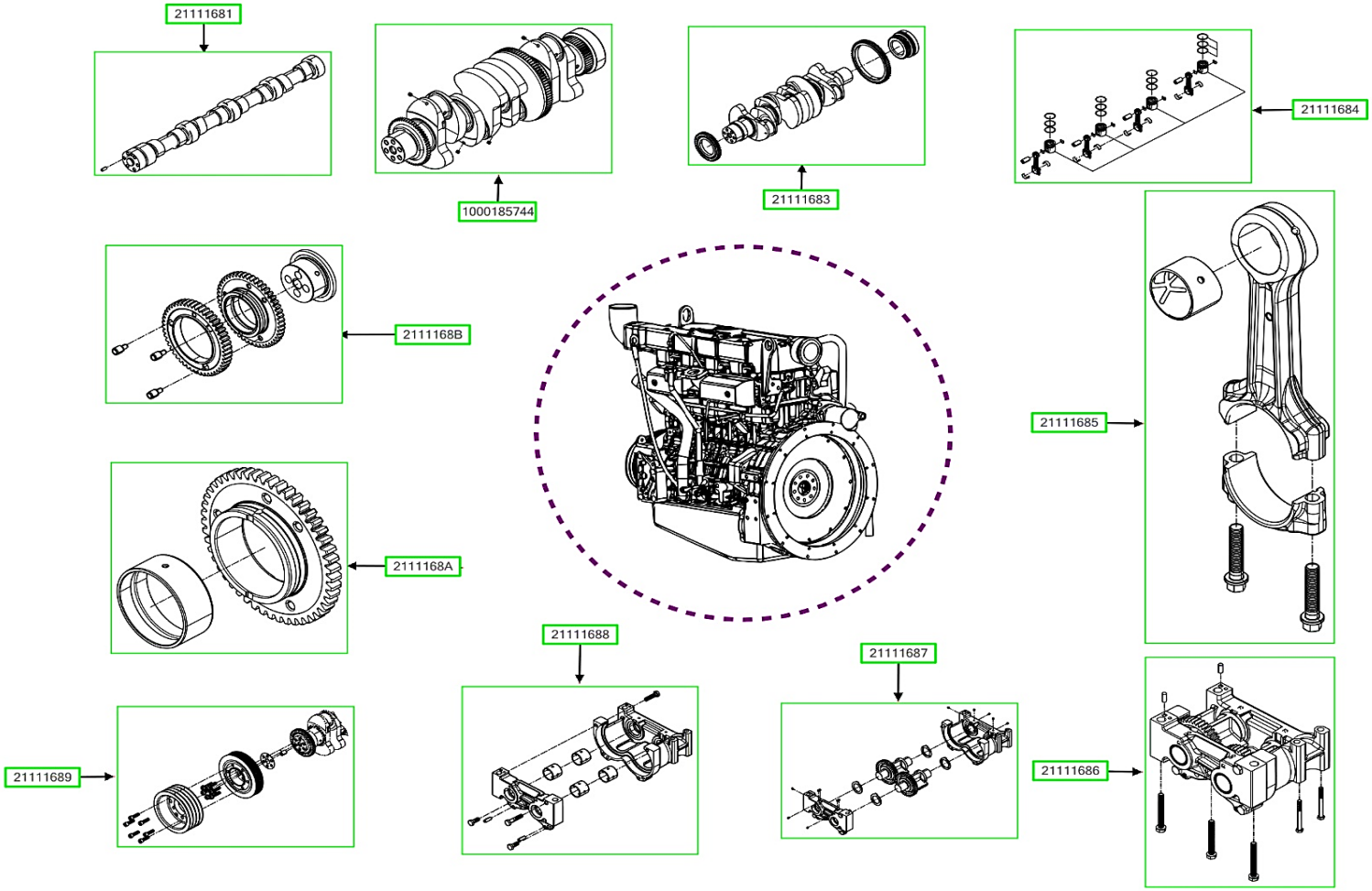

NAME_ASSB	CODE_PART NO	NAME	QTY
MOTION GROUP	21111681	CRANKSHAFT GROUP	1
	1000185744	CAMSHAFT ASSEMBLY	1
	21111683	CRANKSHAFT SUBASSEMBLY	1
	21111684	PISTON AND CONNECTING ROD GROUP	1
	21111685	CONNECTING ROD ASSEMBLY	1
	21111686	SECONDARY BALANCE MACHANISM	1
	21111687	SECONDARY BALANCE MACHANISM	1

NAME_ASSB	CODE_PART NO	NAME	QTY
MOTION GROUP	21111688	BALANCE SHAFT UNIT HOUSING SET	1
	21111689	CRANKSHAFT PULLEY GROUP	1
	2111168A	IDLER GEAR SET	1
	2111168B	IDLER GEAR ASSEMBLY	1

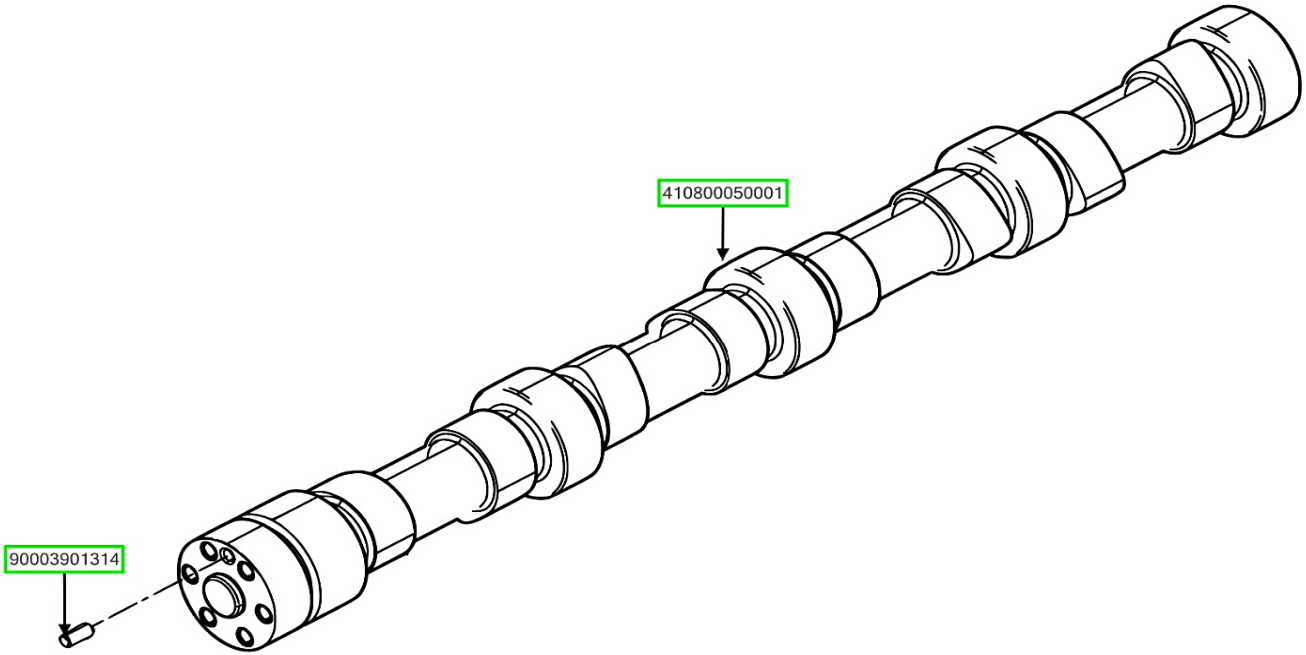

NAME_ASSB	CODE_PART NO	NAME	QTY
CRANKSHAFT GROUP	410800050001	CAMSHAFT ASSEMBLY	1
	90003901314	DOWEL PIN	1

NAME_ASSB	CODE_PART NO	NAME	QTY
CRANKSHAFT GROUP			

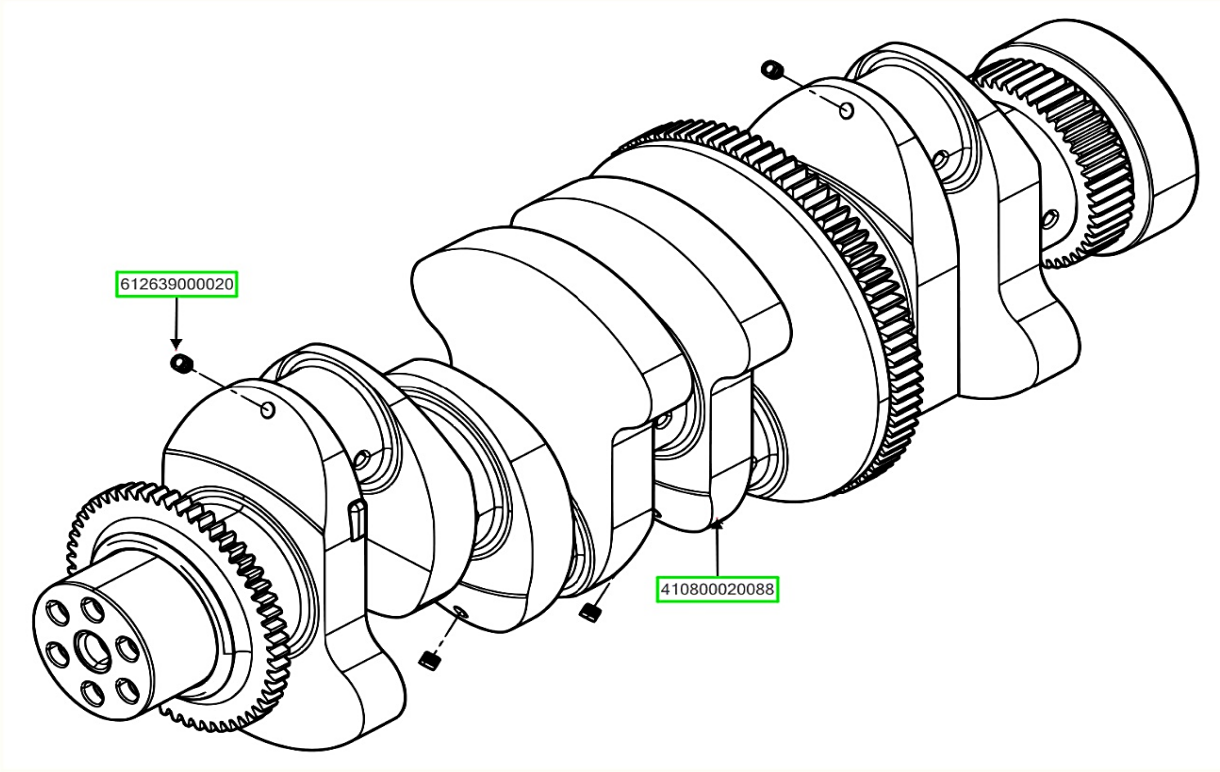

NAME_ASSB	CODE_PART NO	NAME	QTY
CAMSHAFT ASSEMBLY	410800020088	CRANKSHAFT SUBASSEMBLY	1
	612639000020	PULLING RIVET	4

NAME_ASSB	CODE_PART NO	NAME	QTY
CAMSHAFT ASSEMBLY			

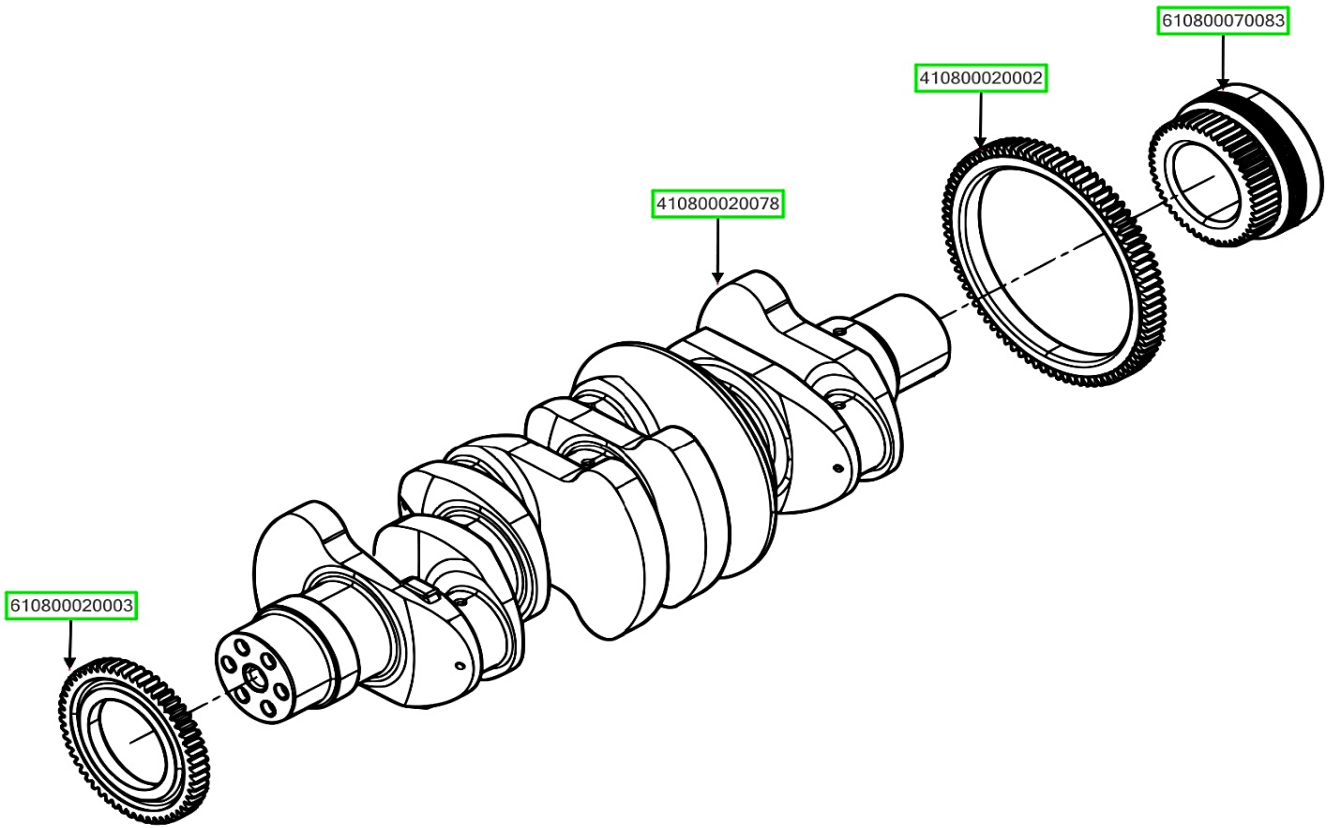

NAME_ASSB	CODE_PART NO	NAME	QTY
CRANKSHAFT SUBASSEMBLY	610800070083	OIL PUMP GEAR	4
	410800020002	SECONDARY BALANCE MACHANISM GEAR RING	4
	410800020078	CRANKSHAFT SUBASSEMBLY	4
	610800020003	CRANKSHAFT TIMING GEAR	1

NAME_ASSB	CODE_PART NO	NAME	QTY
CRANKSHAFT SUBASSEMBLY			

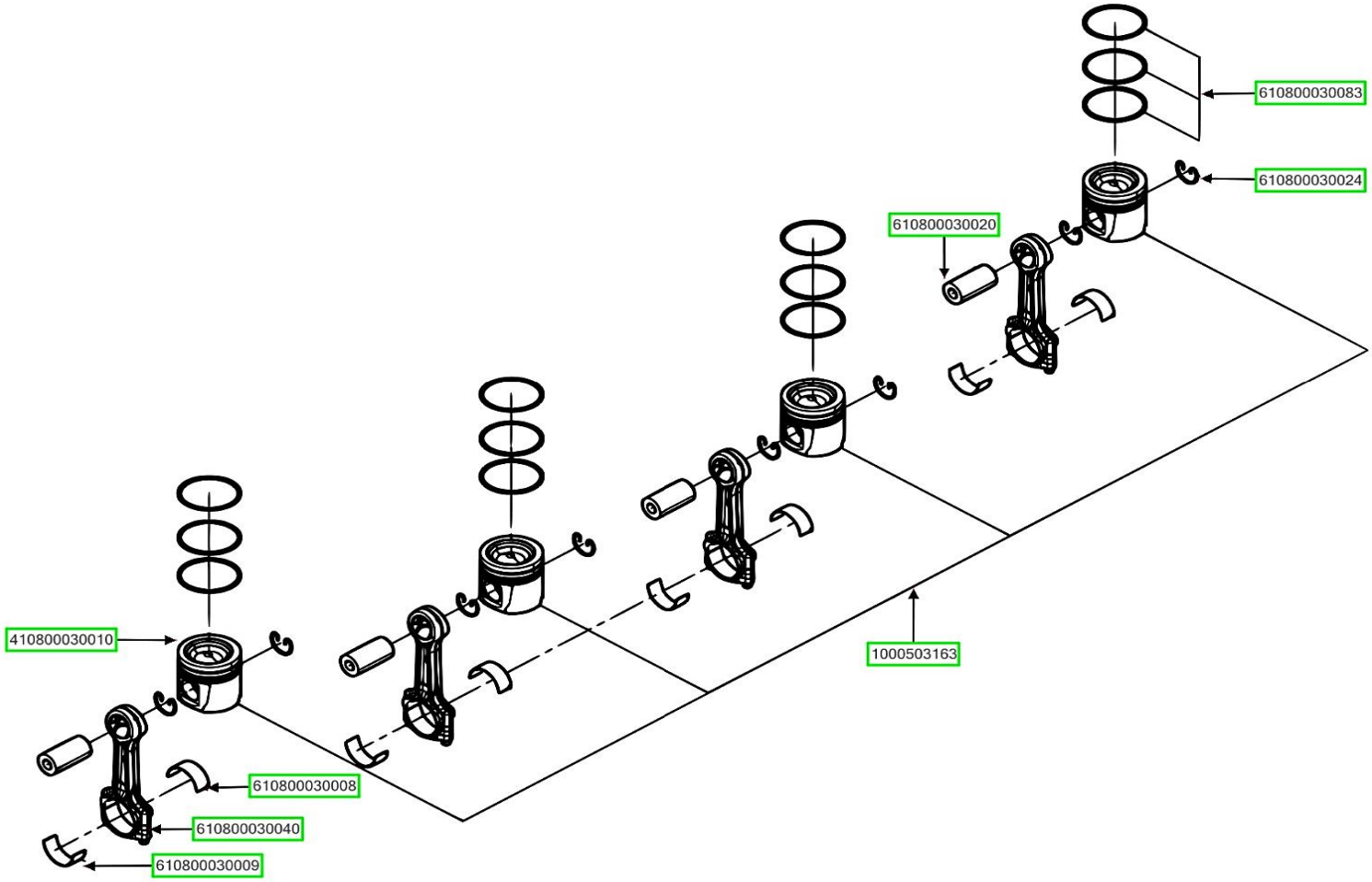

NAME_ASSB	CODE_PART NO	NAME	QTY
PISTON AND CONNECTING ROD GROUP	610800030009	CONNECTING ROD LOWER SHELL	4
	610800030040	CONNECTING ROD ASSEMBLY	4
	610800030008	CONNECTING ROD UPPER SHELL	4
	1000503163	PISTON SET	1
	410800030010	PISTON	1
	610800030024	PISTON PIN RETAINER	8
	610800030083	PISTON RING SET	4

NAME_ASSB	CODE_PART NO	NAME	QTY
PISTON AND CONNECTING ROD GROUP	610800030020	PISTON PIN	4

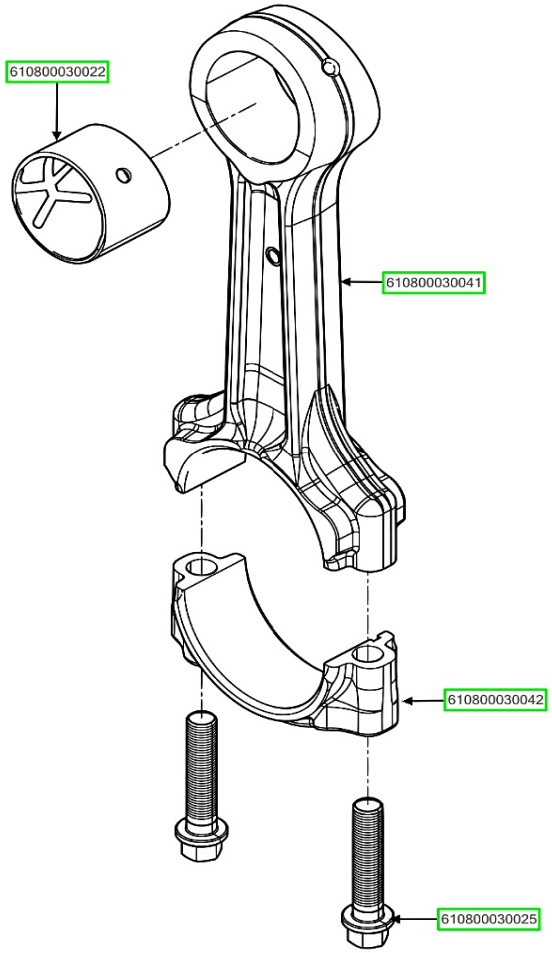

NAME_ASSB	CODE_PART NO	NAME	QTY
CONNECTING ROD ASSEMBLY	610800030022	CONNECTING ROD BUSH	4
	610800030041	CONNECTING ROD ASSEMBLY	4
	610800030042	CONNECTING ROD COVER	4
	610800030025	CONNECTING ROD BOLT	8

NAME_ASSB	CODE_PART NO	NAME	QTY
CONNECTING ROD ASSEMBLY			

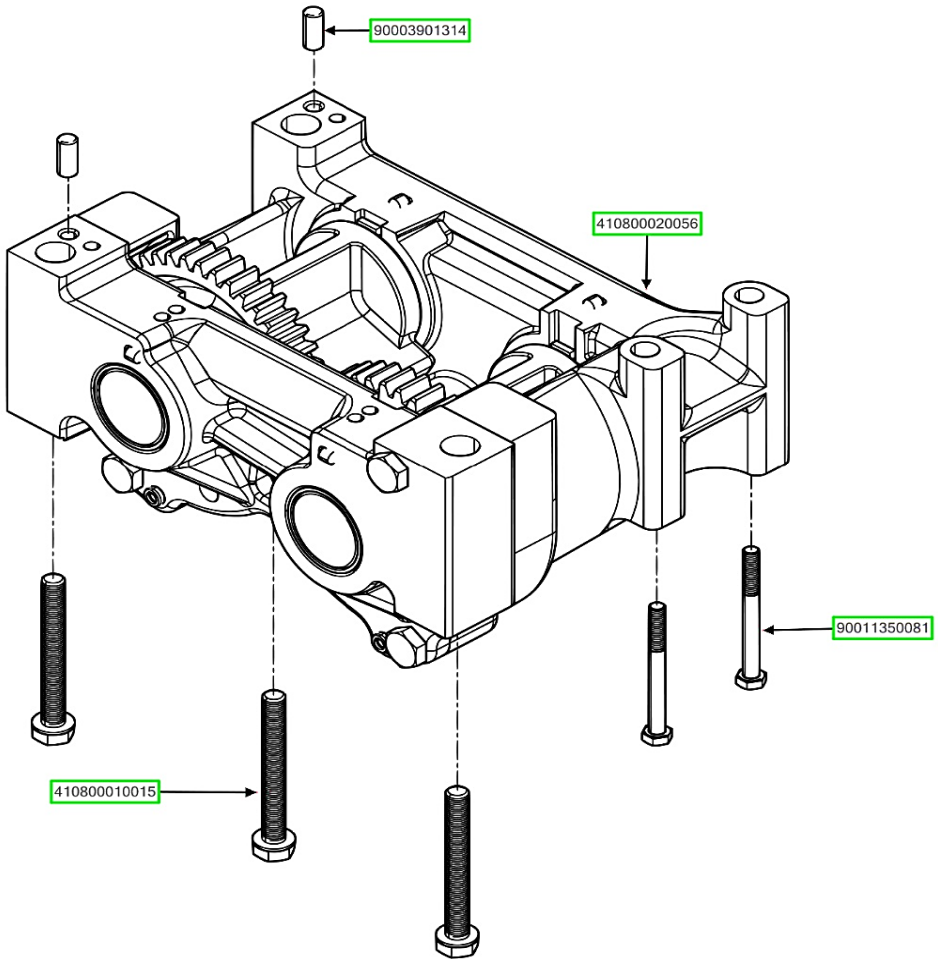

NAME_ASSB	CODE_PART NO	NAME	QTY
SECONDARY BALANCE MACHANISM	90003901314	DOWEL PIN	2
	410800020056	SECONDARY BALANCE MACHANISM	1
	90011350081	HEXAGON HEAD BOLT	2
	410800010015	HEXAGON HEAD BOLT	3

NAME_ASSB	CODE_PART NO	NAME	QTY
SECONDARY BALANCE MACHANISM			

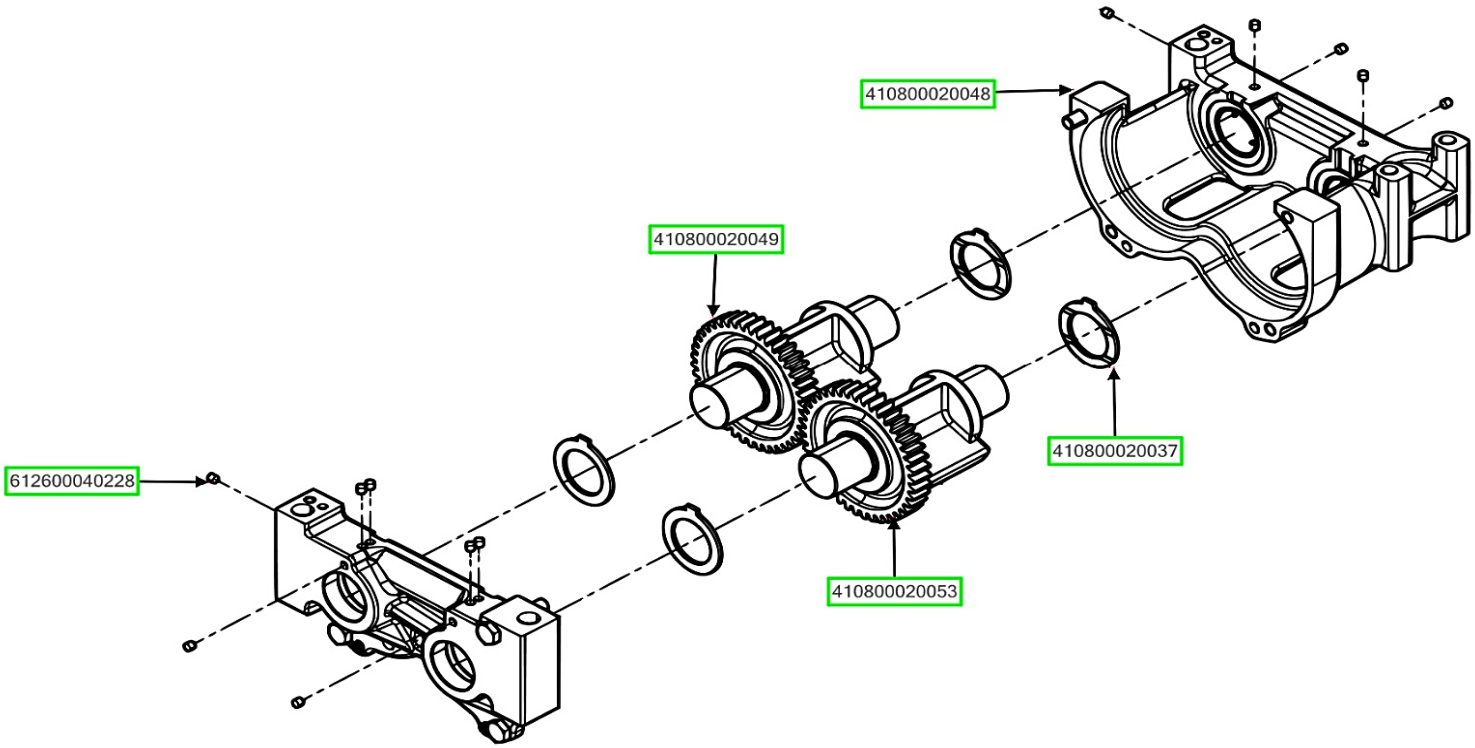

NAME_ASSB	CODE_PART NO	NAME	QTY
SECONDARY BALANCE MACHANISM	410800020048	BALANCE SHAFT UNIT HOUSING SET	1
	612600040228	DOWEL PIN	12
	410800020037	WAVE SPRING WASHER	*4*
	410800020053	SECONDARY BALANCE MACHANISM DRIVEN GEAR SHAFT	1
	410800020049	SECONDARY BALANCE MACHANISM DRIVEN GEAR SHAFT	1

NAME_ASSB	CODE_PART NO	NAME	QTY
SECONDARY BALANCE MACHANISM			

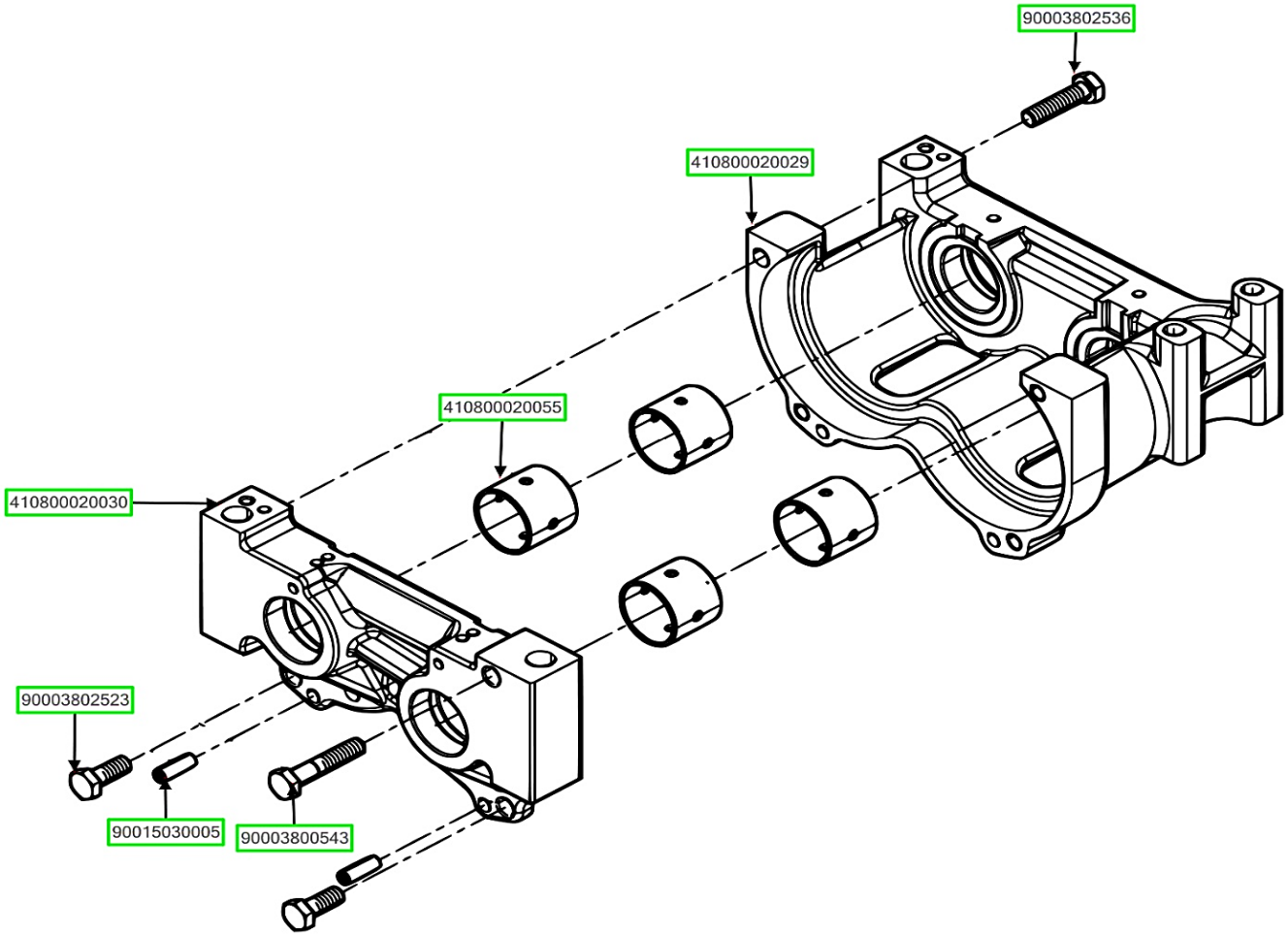

NAME_ASSB	CODE_PART NO	NAME	QTY
BALANCE SHAFT UNIT HOUSING SET	90003802523	HEXAGON HEAD BOLT	2
	90015030005	DOWEL PIN	2
	90003800543	HEXAGON HEAD BOLT	1
	410800020030	SECONDARY BALANCE MACHANISM COVER	1
	410800020055	SHAFT CASING	*4*
	410800020029	SECONDARY BALANCE MACHANISM HOUSING	1
	90003802536	HEXAGON HEAD BOLT	1

NAME_ASSB	CODE_PART NO	NAME	QTY
BALANCE SHAFT UNIT HOUSING SET			

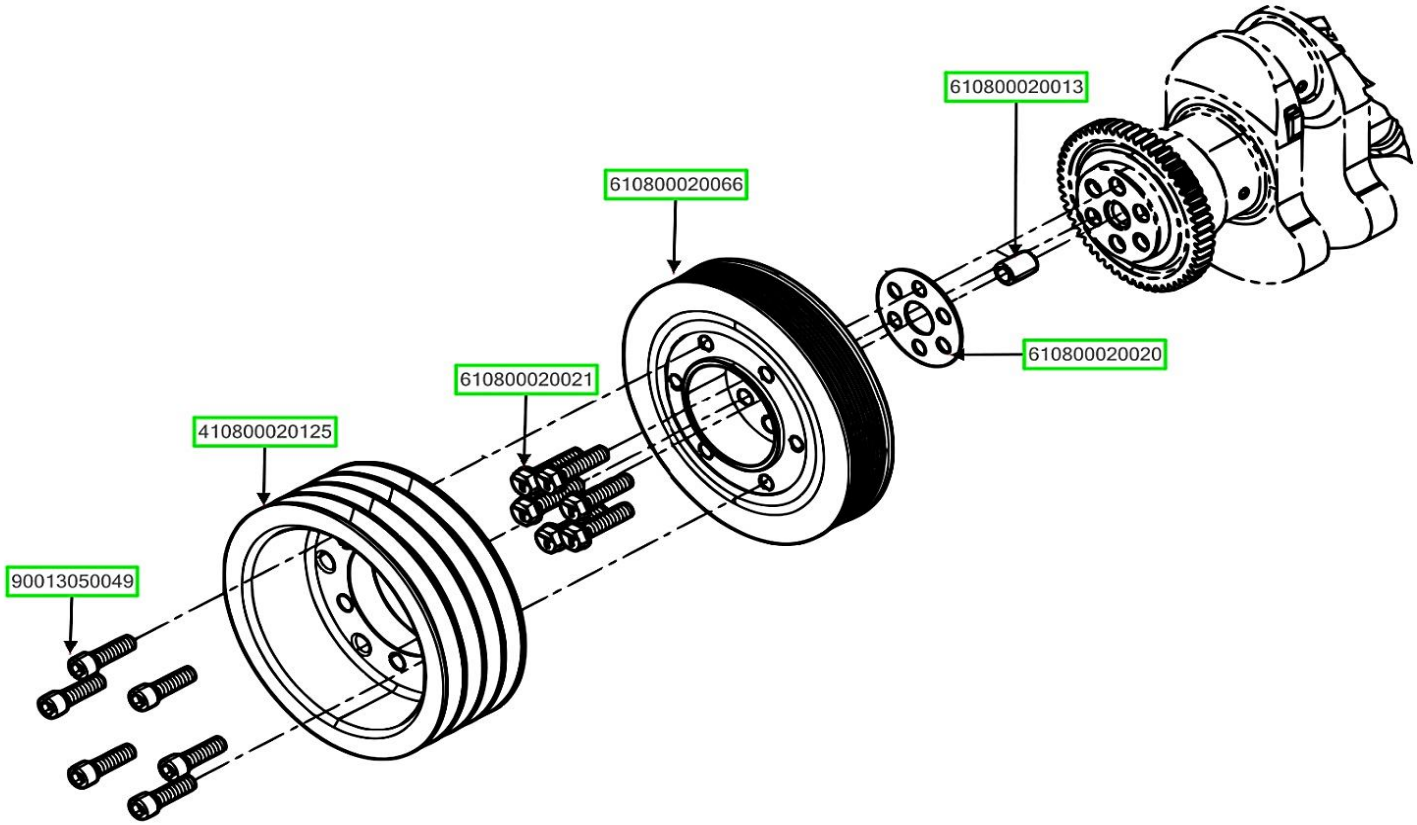

NAME_ASSB	CODE_PART NO	NAME	QTY
CRANKSHAFT PULLEY GROUP	90013050049	HEXAGON HEAD BOLT	6
	410800020125	CRANKSHAFT PULLEY	1
	610800020021	HEXAGON HEAD BOLT	6
	610800020066	TORSIONAL VIBRATION DAMPER	1
	610800020020	PLATE	1
	610800020013	DOWEL PIN	1

NAME_ASSB	CODE_PART NO	NAME	QTY
CRANKSHAFT PULLEY GROUP			

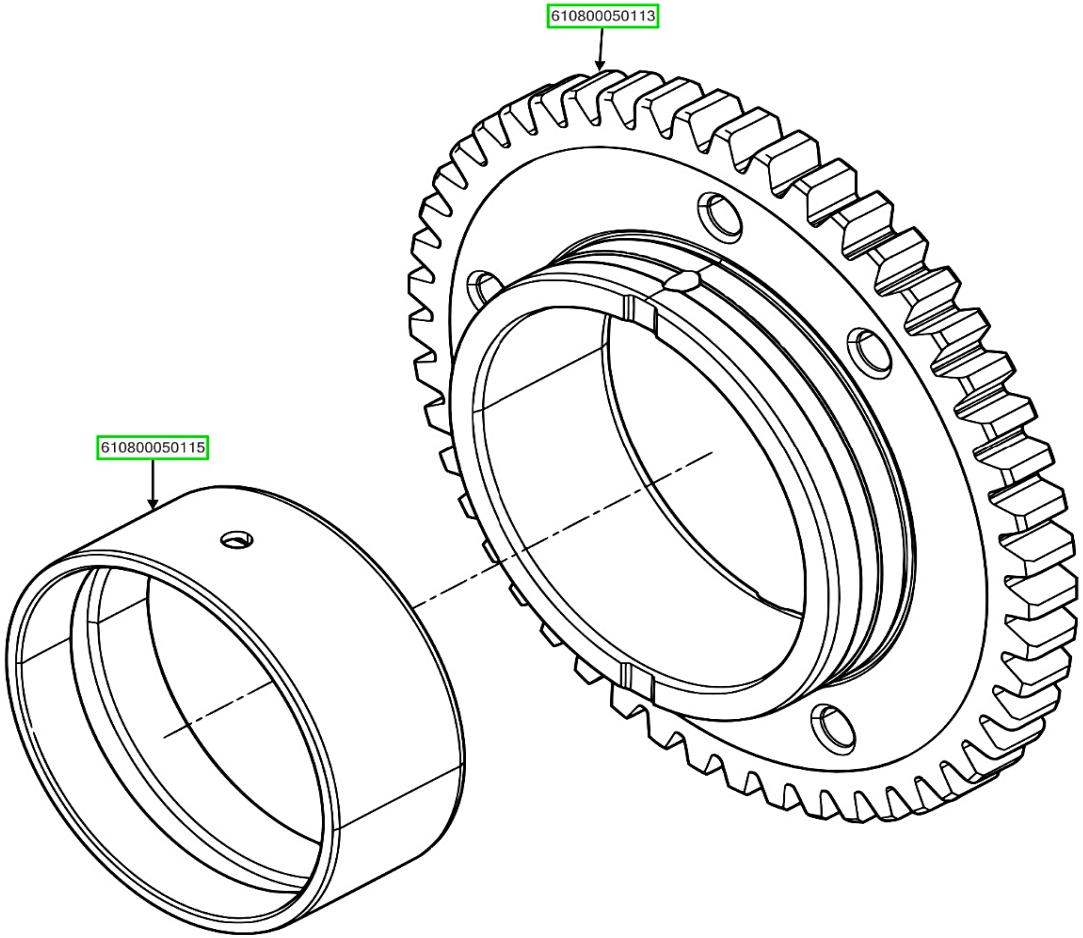

NAME_ASSB	CODE_PART NO	NAME	QTY
IDLER GEAR SET	610800050115	ROLLER BUSH	1
	610800050113	IDLER GEAR SET	1

NAME_ASSB	CODE_PART NO	NAME	QTY
IDLER GEAR SET			

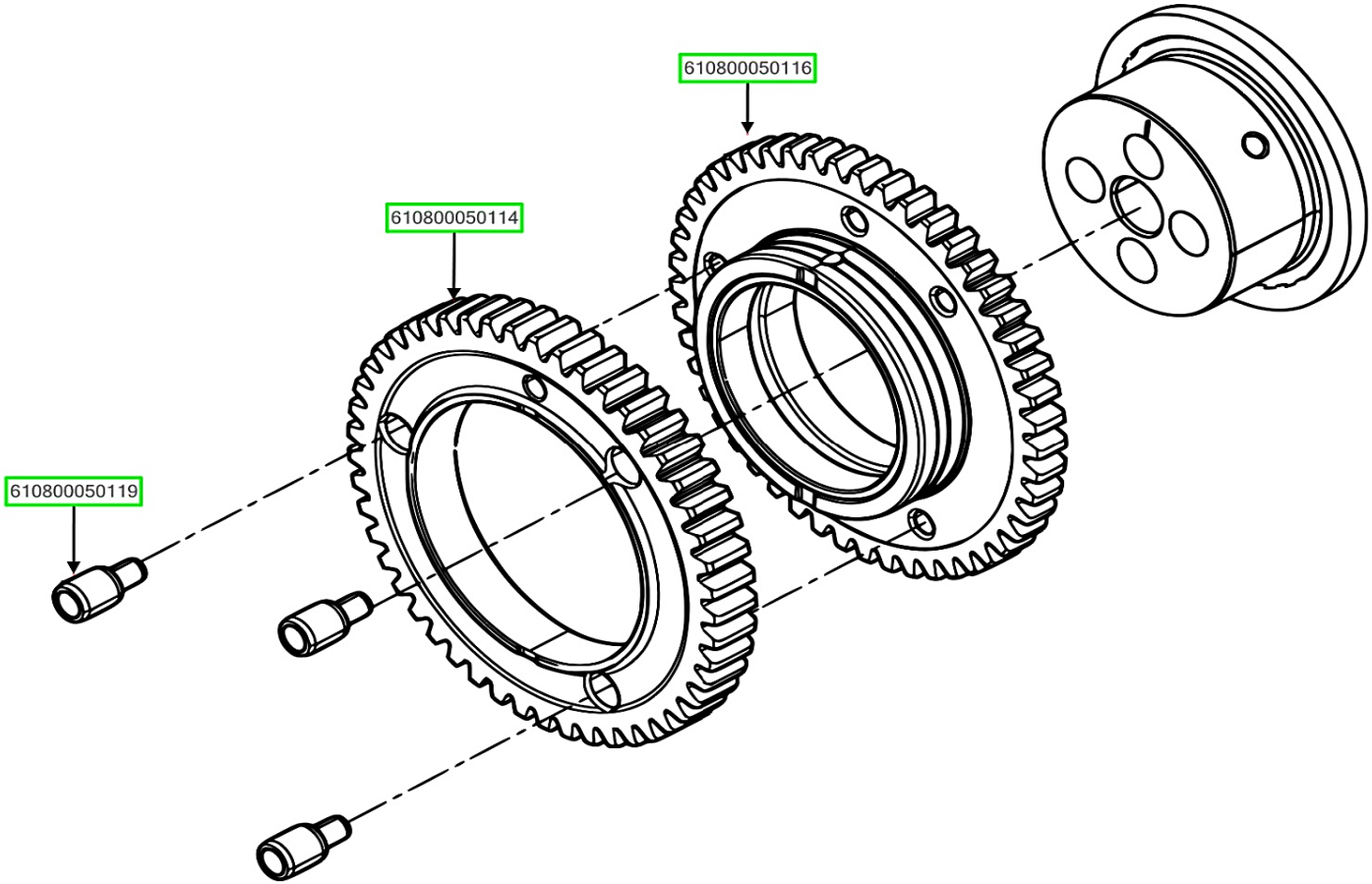

NAME_ASSB	CODE_PART NO	NAME	QTY
IDLER GEAR ASSEMBLY	610800050119	RUBBER SLEEVE	3
	610800050114	IDLER GEAR SET	1
	610800050116	CRANKSHAFT TIMING GEAR	1

NAME_ASSB	CODE_PART NO	NAME	QTY
IDLER GEAR ASSEMBLY			

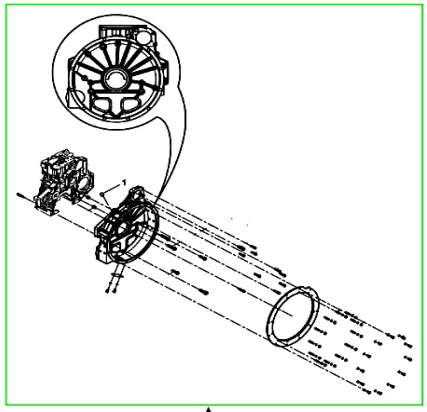

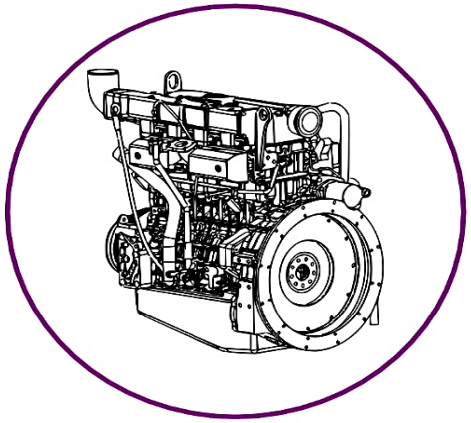

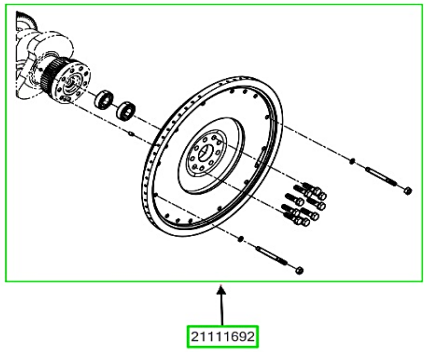

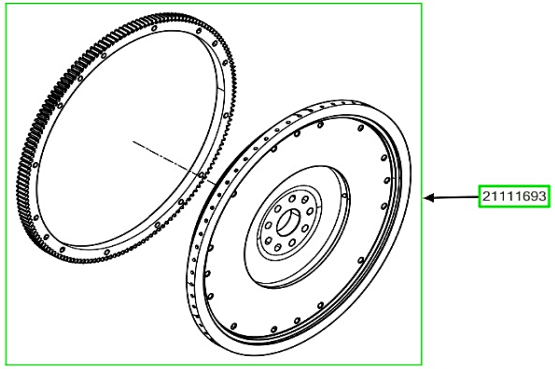

NAME_ASSB	CODE_PART NO	NAME	QTY
FLYWHEEL GROUP	21111691	FLYWHEEL HOUSING ASSEMBLY	1
	21111692	FLYWHEEL ASSEMBLY	1
	21111693	FLYWHEEL ASSEMBLY	1

NAME_ASSB	CODE_PART NO	NAME	QTY
FLYWHEEL GROUP			

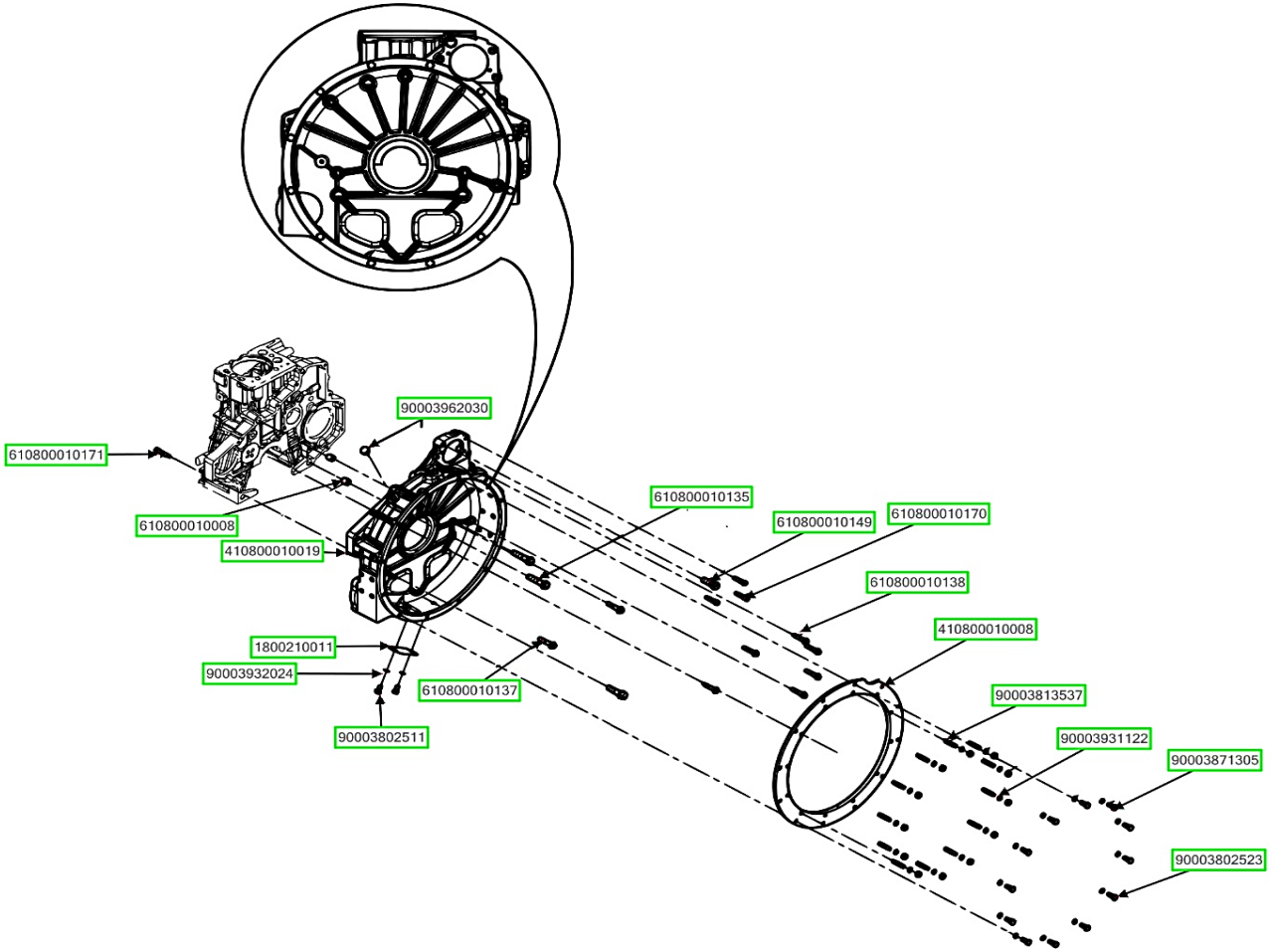

NAME_ASSB	CODE_PART NO	NAME	QTY
FLYWHEEL HOUSING ASSEMBLY	90003962030	HEXAGON HEAD BOLT	1
	610800010135	HEXAGON HEAD BOLT	3
	610800010149	HEXAGON HEAD BOLT	1
	610800010170	HEXAGON HEAD BOLT	3
	610800010138	HEXAGON HEAD BOLT	6
	410800010008	FLYWHEEL HOUSING COUPLING RING	1
	90003813537	DOUBLE END STUD	12

NAME_ASSB	CODE_PART NO	NAME	QTY
FLYWHEEL HOUSING ASSEMBLY	90003931122	WASHER	24
	90003871305	HEXAGON HEAD BOLT	12
	90003802523	HEXAGON HEAD BOLT	12
	610800010137	HEXAGON HEAD BOLT	2
	90003802511	HEXAGON HEAD BOLT	2
	90003932024	SPRING WASHER	2
	1800210011	HANDHOLE COVER	1

NAME_ASSB	CODE_PART NO	NAME	QTY
FLYWHEEL HOUSING ASSEMBLY	410800010019	FLYWHEEL HOUSING	1
	610800010008	FLYWHEEL HOUSING	2
	610800010171	HEXAGON HEAD BOLT	1

NAME_ASSB	CODE_PART NO	NAME	QTY
FLYWHEEL HOUSING ASSEMBLY			

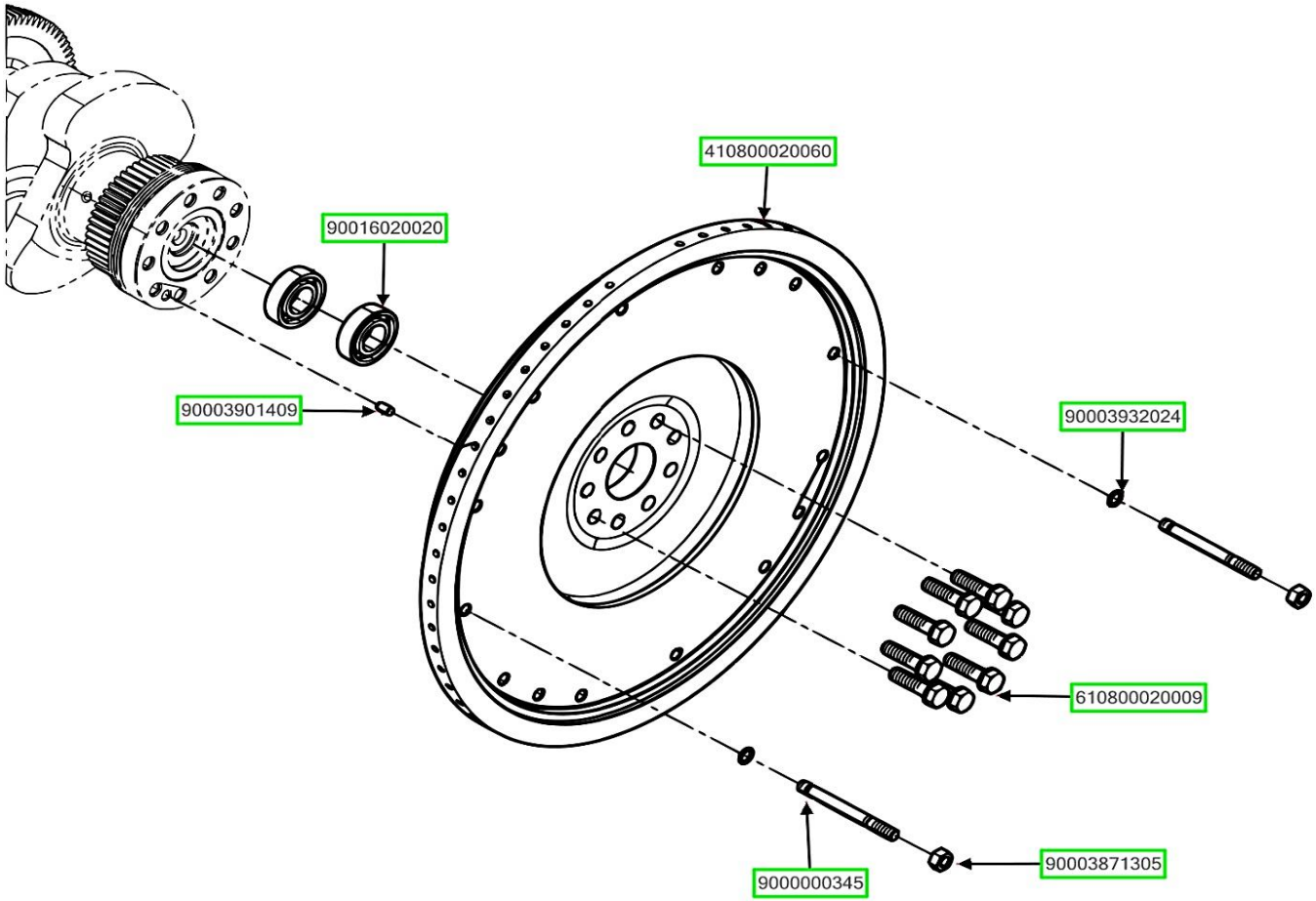

NAME_ASSB	CODE_PART NO	NAME	QTY
FLYWHEEL GROUP	90016020020	DEEP GROOVE BALL BEARING	2
	410800020060	FLYWHEEL	1
	90003932024	SPRING WASHER	2
	610800020009	HEXAGON HEAD BOLT	9
	90003871305	HEXAGON HEAD BOLT	2
	9000000345	DOUBLE END STUD	2
	90003901409	DOWEL PIN	1

NAME_ASSB	CODE_PART NO	NAME	QTY
FLYWHEEL GROUP			

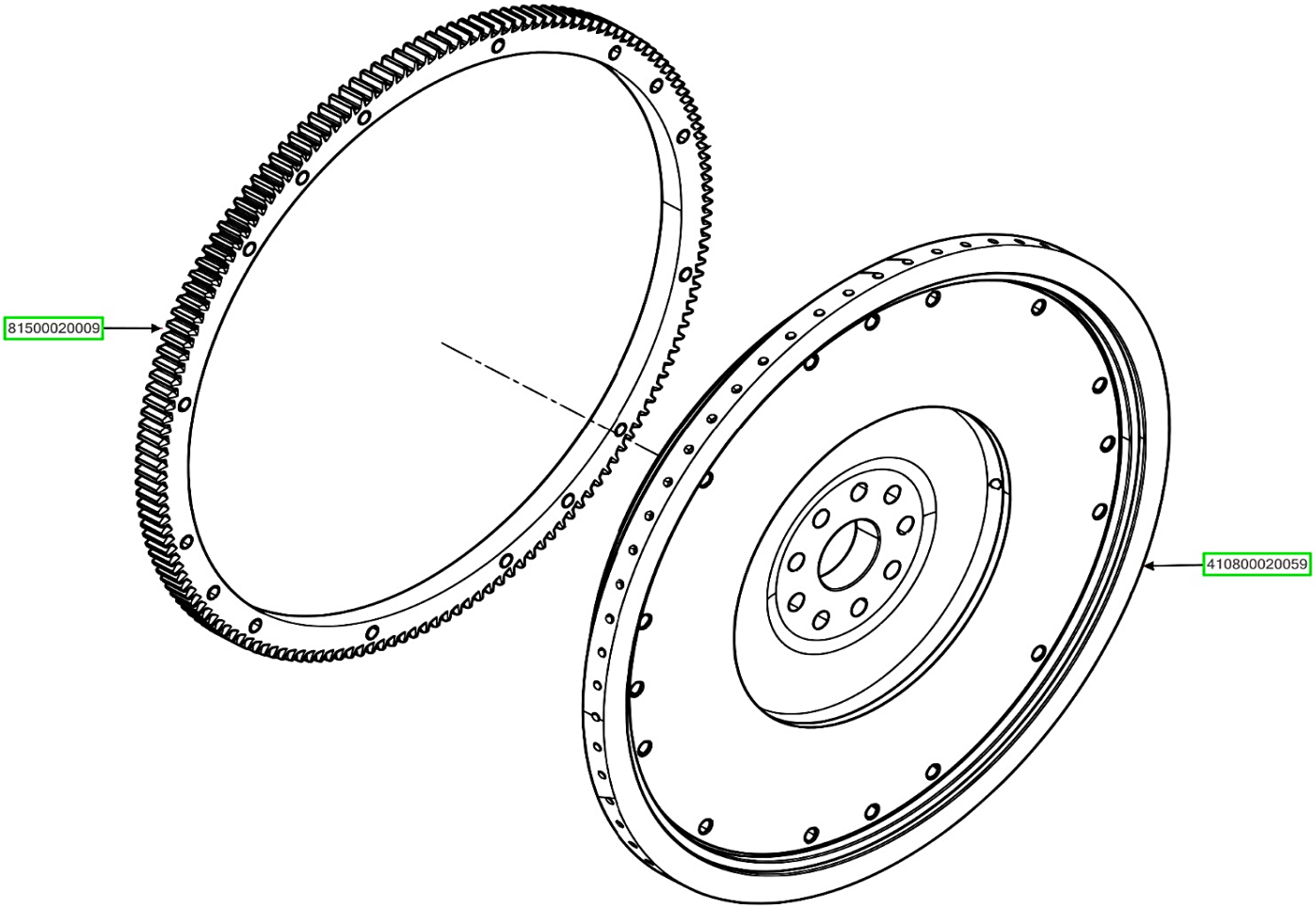

NAME_ASSB	CODE_PART NO	NAME	QTY
FLYWHEEL ASSEMBLY	81500020009	FLYWHEEL RING GEAR	1
	410800020059	FLYWHEEL ASSEMBLY	1

NAME_ASSB	CODE_PART NO	NAME	QTY
FLYWHEEL ASSEMBLY			

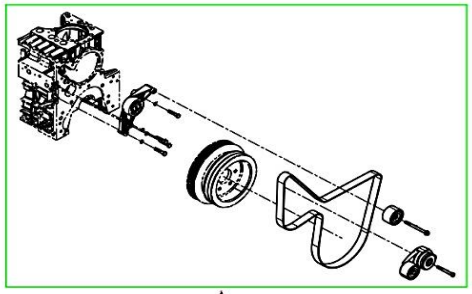

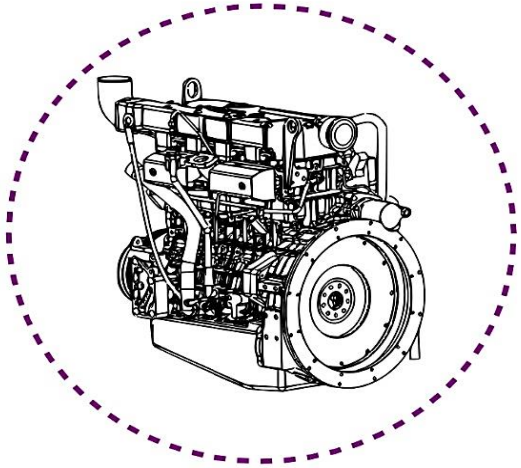

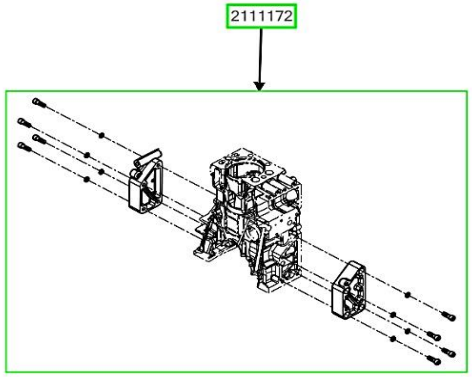

NAME_ASSB	CODE_PART NO	NAME	QTY
MINOR ITEMS	2111171	TENSIONER AND BELT GROUP	1
	2111172	ENGINE BRACKET GROUP	1

NAME_ASSB	CODE_PART NO	NAME	QTY
MINOR ITEMS			

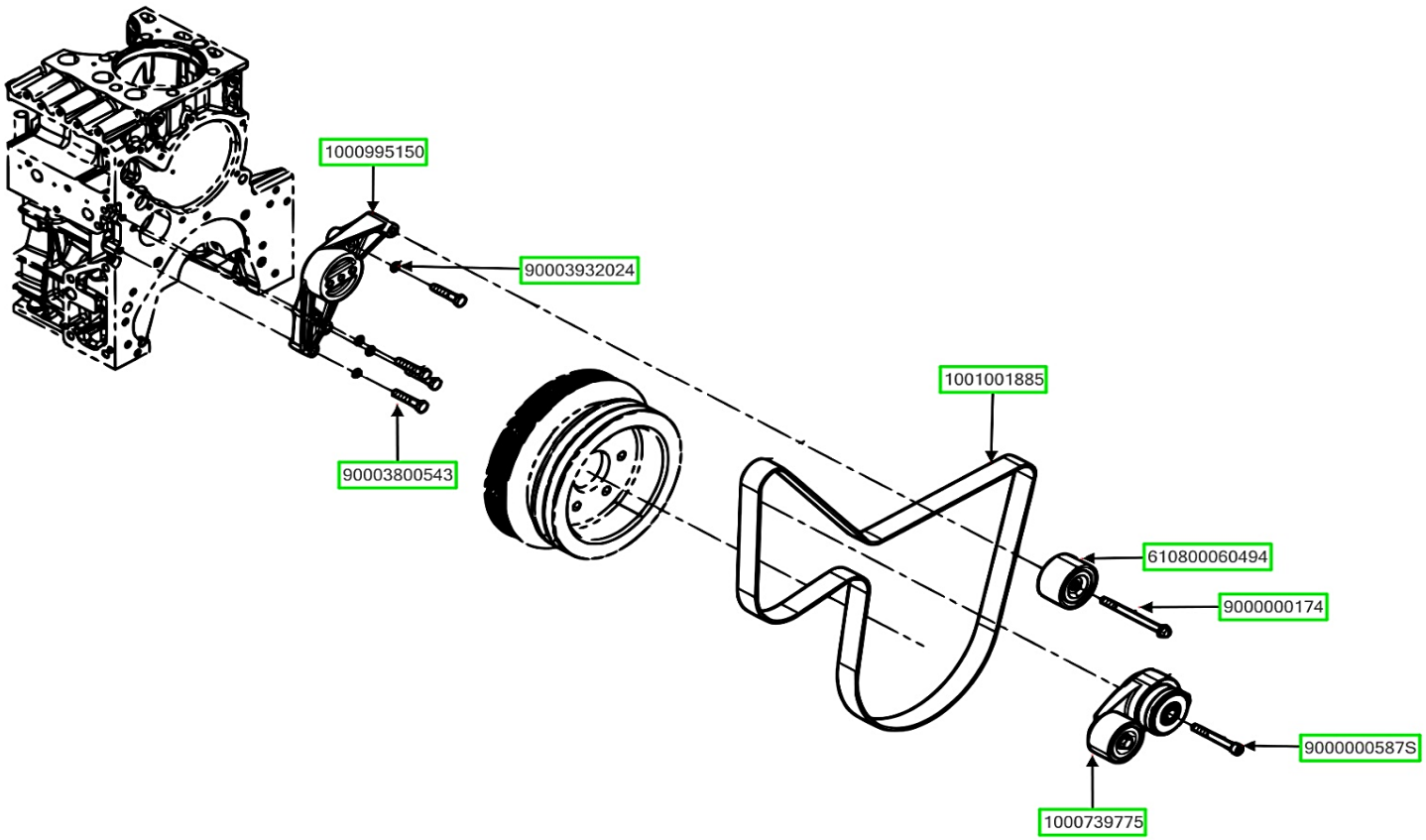

NAME_ASSB	CODE_PART NO	NAME	QTY
TENSIONER AND BELT GROUP P	1000995150	TENSIONER BRACKET	4
	90003932024	SPRING WASHER	4
	90003800543	HEXAGON HEAD BOLT	1
	1001001885	POLY V BELT	1
	610800060494	IDLE WHEEL	1
	9000000174	HEXAGON HEAD BOLT	1
	1000739775	AUTOMATIC TENSIONER	1

NAME_ASSB	CODE_PART NO	NAME	QTY
TENSIONER AND BELT GROUP	9000000587S	INNER HEXAGON SOCKET HEAD CAP SCREW	1

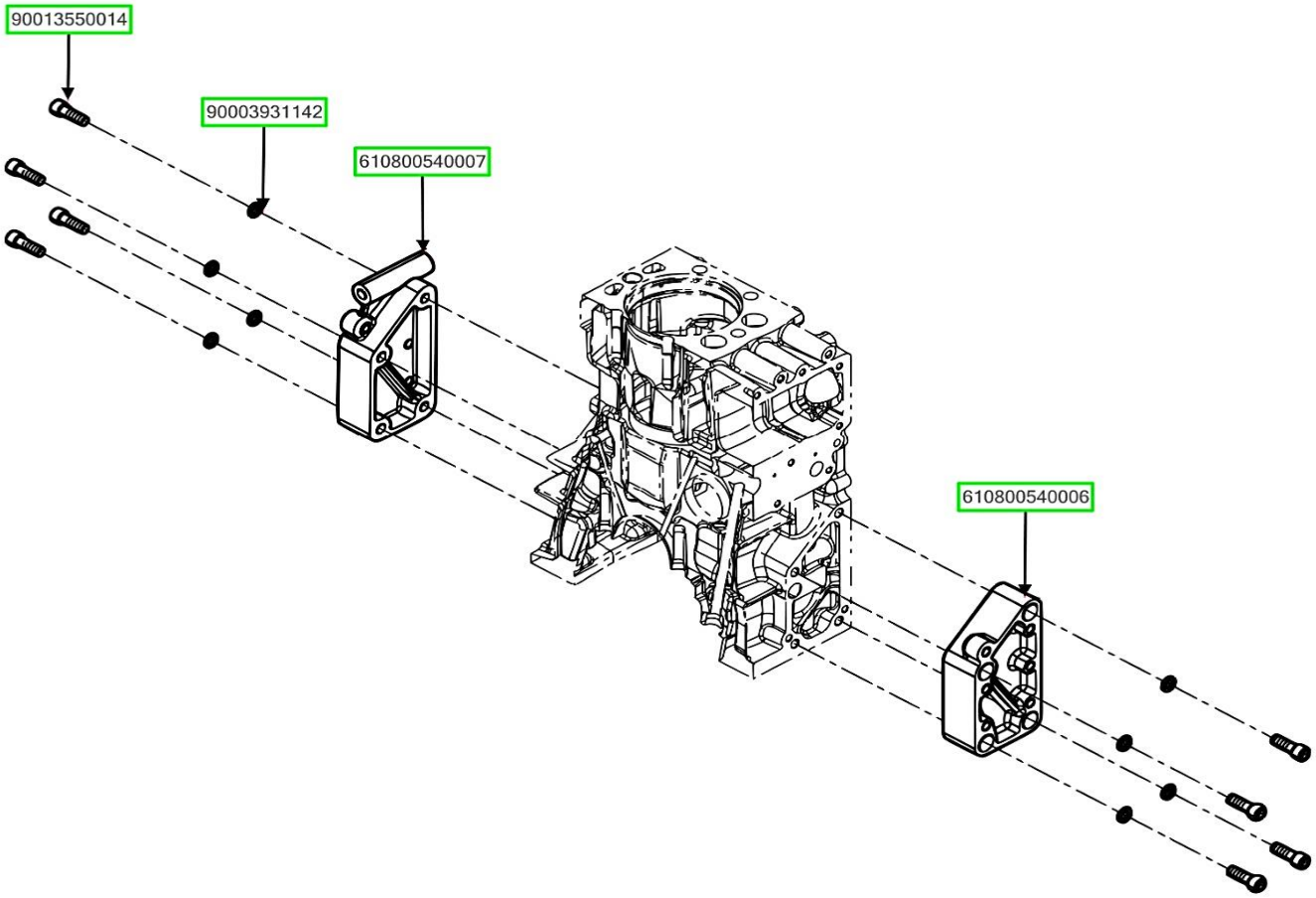

NAME_ASSB	CODE_PART NO	NAME	QTY
ENGINE BRACKET GROUP	90013550014	SCREW PLUG	8
	90003931142	WAVE SPRING WASHER	8
	610800540007	ENGINE BRACKET	1
	610800540006	ENGINE BRACKET	1

NAME_ASSB	CODE_PART NO	NAME	QTY
ENGINE BRACKET GROUP			

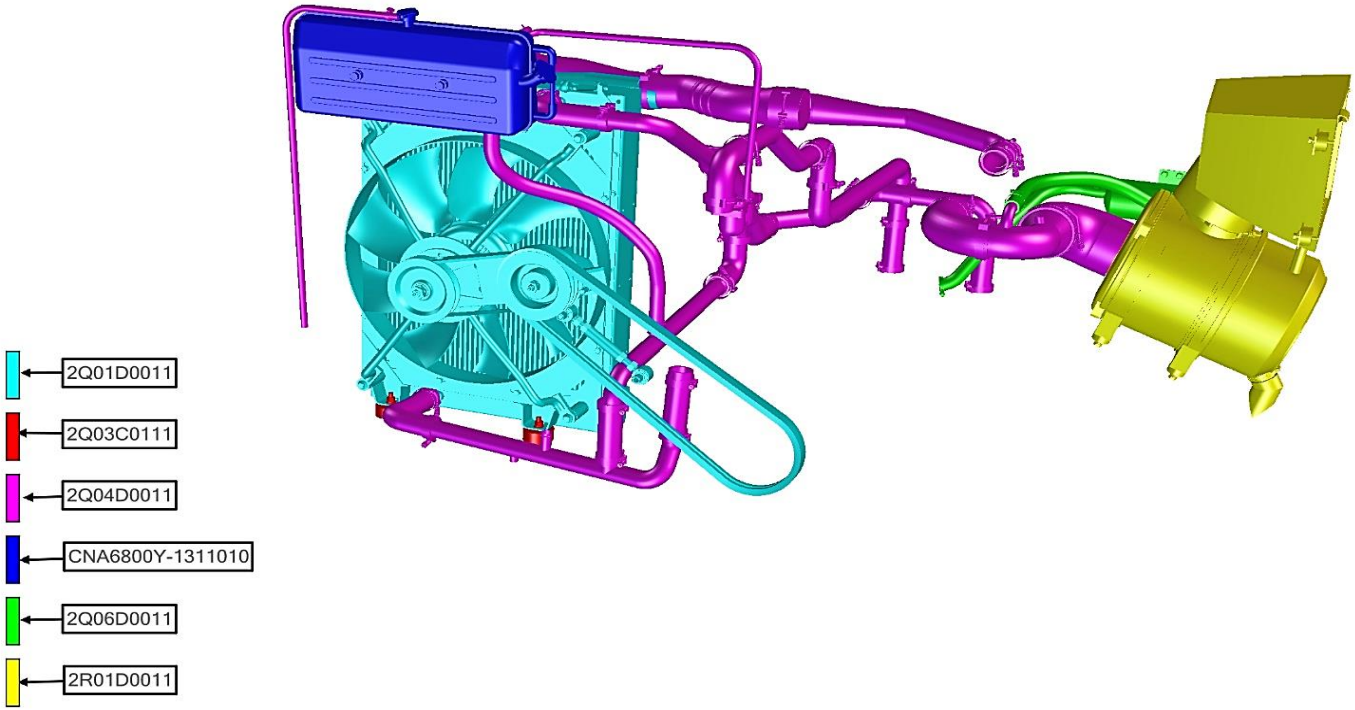

NAME_ASSB	CODE_PART NO	NAME	QTY
COOLING SYSTEM	2Q01D0011	RADIATORS - ASSY	1
	2Q03C0111	RADIATOR FRAME - ASSY	1
	2Q04D0011	COOLING PIPE - ASSY	1
	CNA6800Y-1311010	EXPANDING WATER TANK - ASSY	1
	2Q06D0011	SILENT TANK - ASSY	1
	2R01D0011	AIR FILTER - ASSY	1

NAME_ASSB	CODE_PART NO	NAME	QTY
COOLING SYSTEM			

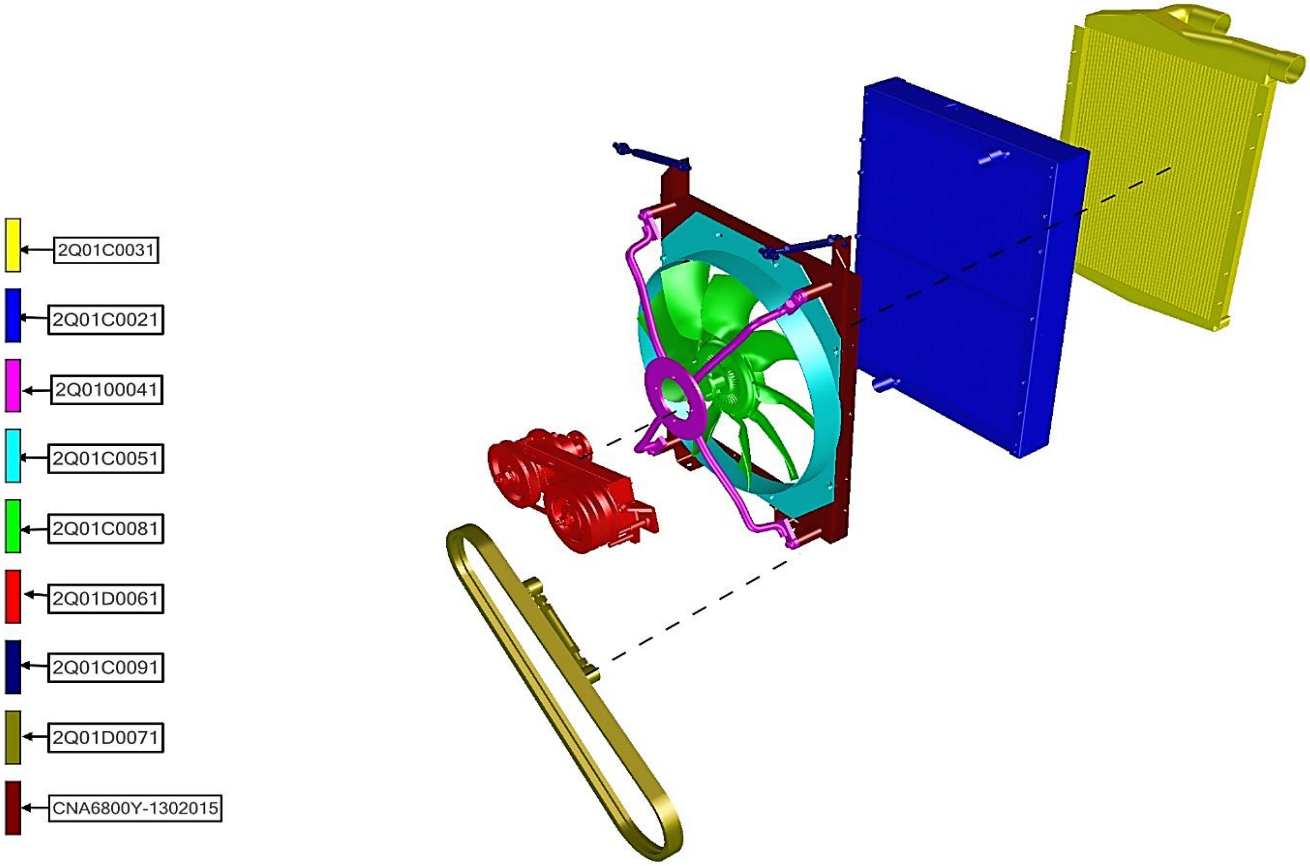

NAME_ASSB	CODE_PART NO	NAME	QTY
RADIATORS - ASSY	CNA6800Y-1302015	RADIATOR FRAME	1
	2Q0100041	FAN FRAME	1
	2Q01C0021	RADIATOR ASSY	1
	2Q01C0031	INTERCOOLER	1
	2Q01C0051	COVER - ASSY	1
	2Q01C0081	COOLING FAN	1
	2Q01C0091	TURNBUCKLE	1

NAME_ASSB	CODE_PART NO	NAME	QTY
RADIATORS - ASSY	2Q01D0061	FAN DRIVING ASSY	1
	2Q01D0071	TURNBUCKLE - ASSY	1

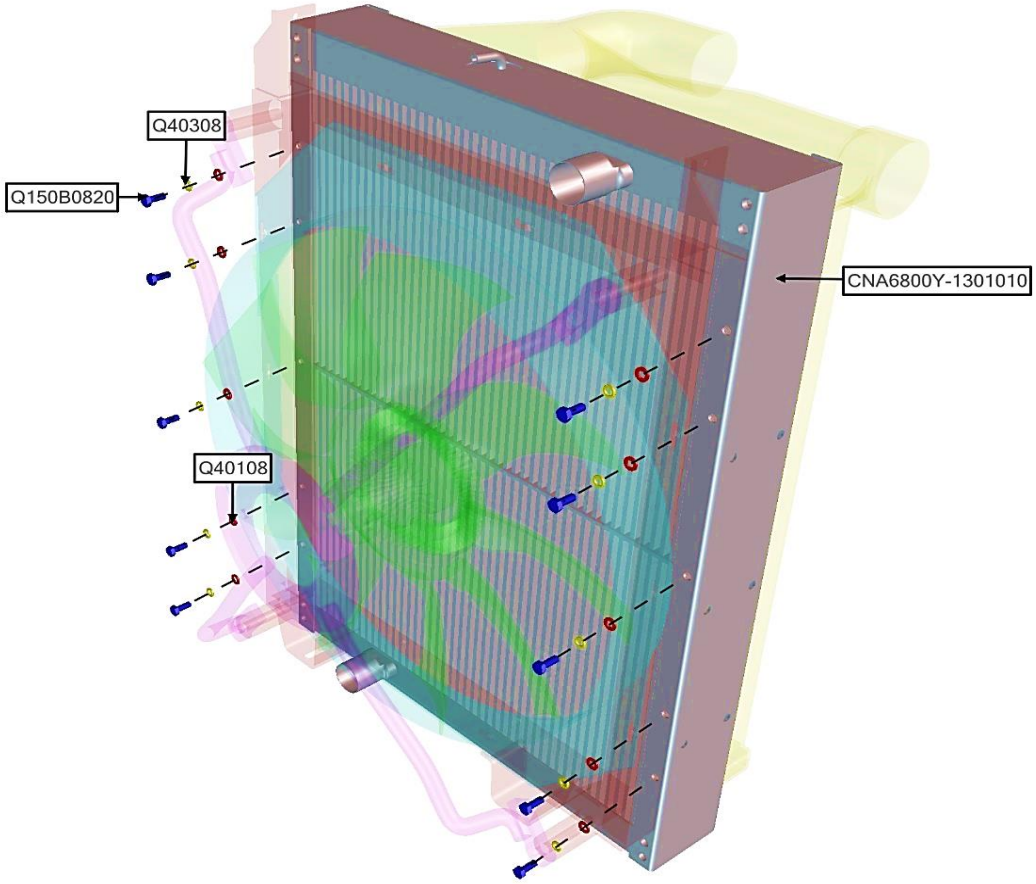

NAME_ASSB	CODE_PART NO	NAME	QTY
RADIATOR	CNA6800Y-1301010	RADIATOR	1
	Q150B0820	BOLT 08020125	10
	Q40108	WASHER Ø08	10
	Q40308	SPLIT WASHER Ø08	10

NAME_ASSB	CODE_PART NO	NAME	QTY
RADIATOR			

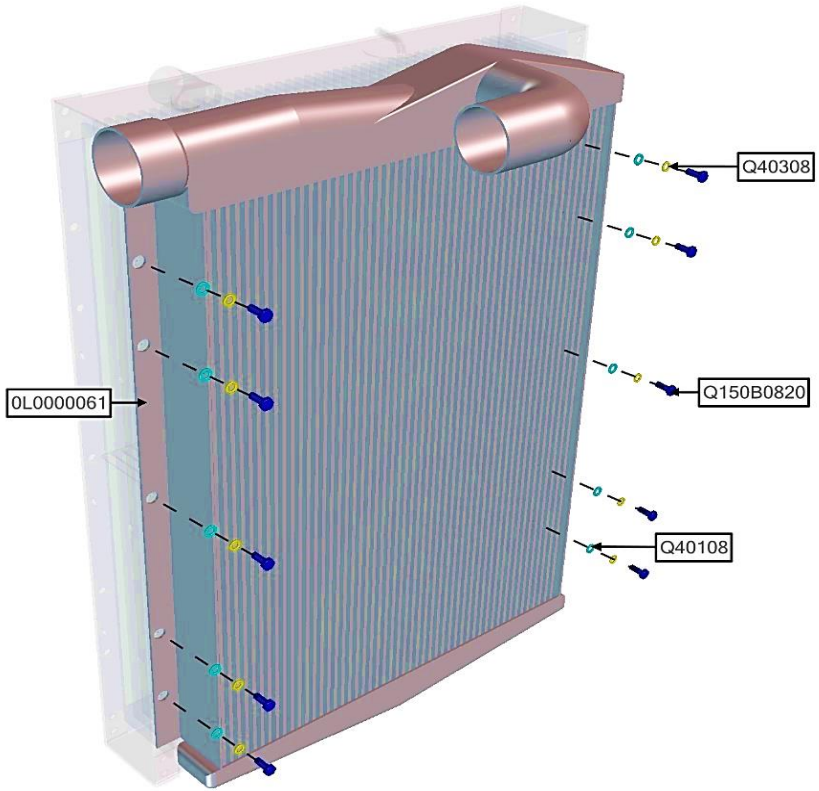

NAME_ASSB	CODE_PART NO	NAME	QTY
INTERCOOLER	0L0000061	INTERCOOLER	1
	Q150B0820	BOLT 08020125	10
	Q40108	WASHER Ø08	10
	Q40308	SPLIT WASHER Ø08	10

NAME_ASSB	CODE_PART NO	NAME	QTY
INTERCOOLER			

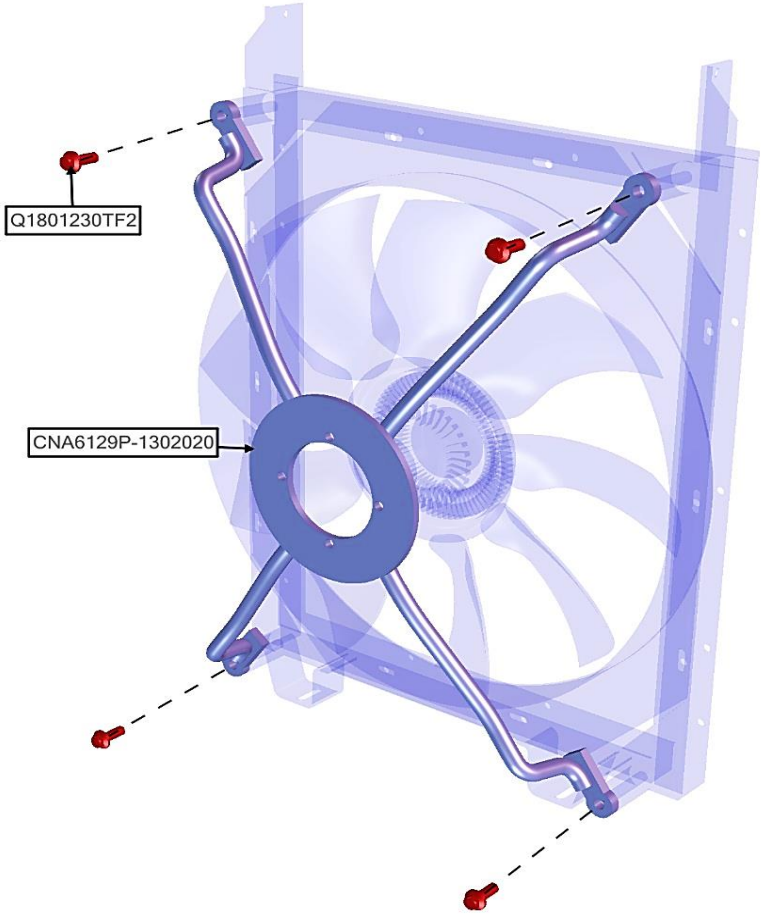

NAME_ASSB	CODE_PART NO	NAME	QTY
FAN FRAME	CNA6129P-1302020	MOUNTING	1
	Q1801230TF2	BOLT 12030150	4

NAME_ASSB	CODE_PART NO	NAME	QTY
FAN FRAME			

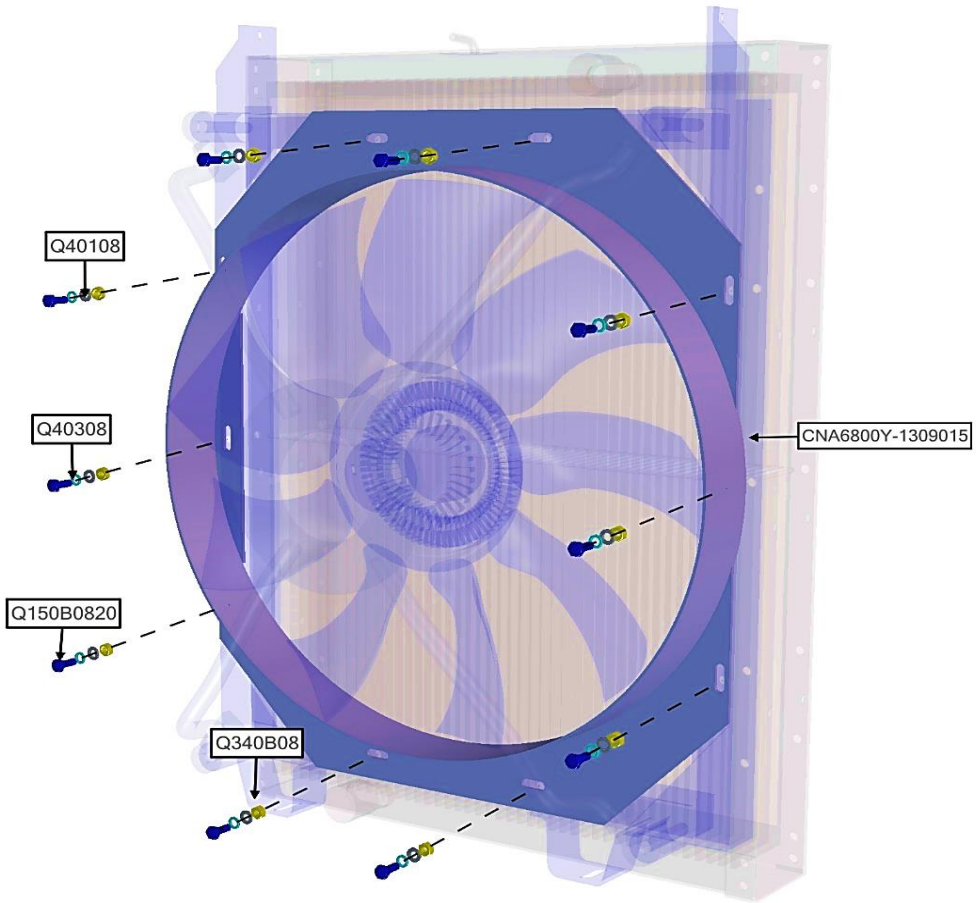

NAME_ASSB	CODE_PART NO	NAME	QTY
COVER - ASSY	CNA6800Y-1309015	COOLING FAN COVER	1
	Q150B0820	BOLT 08020125	10
	Q340B08	NUT 08125	10
	Q40108	WASHER Ø08	10
	Q40308	SPLIT WASHER Ø08	10

NAME_ASSB	CODE_PART NO	NAME	QTY
COVER - ASSY			

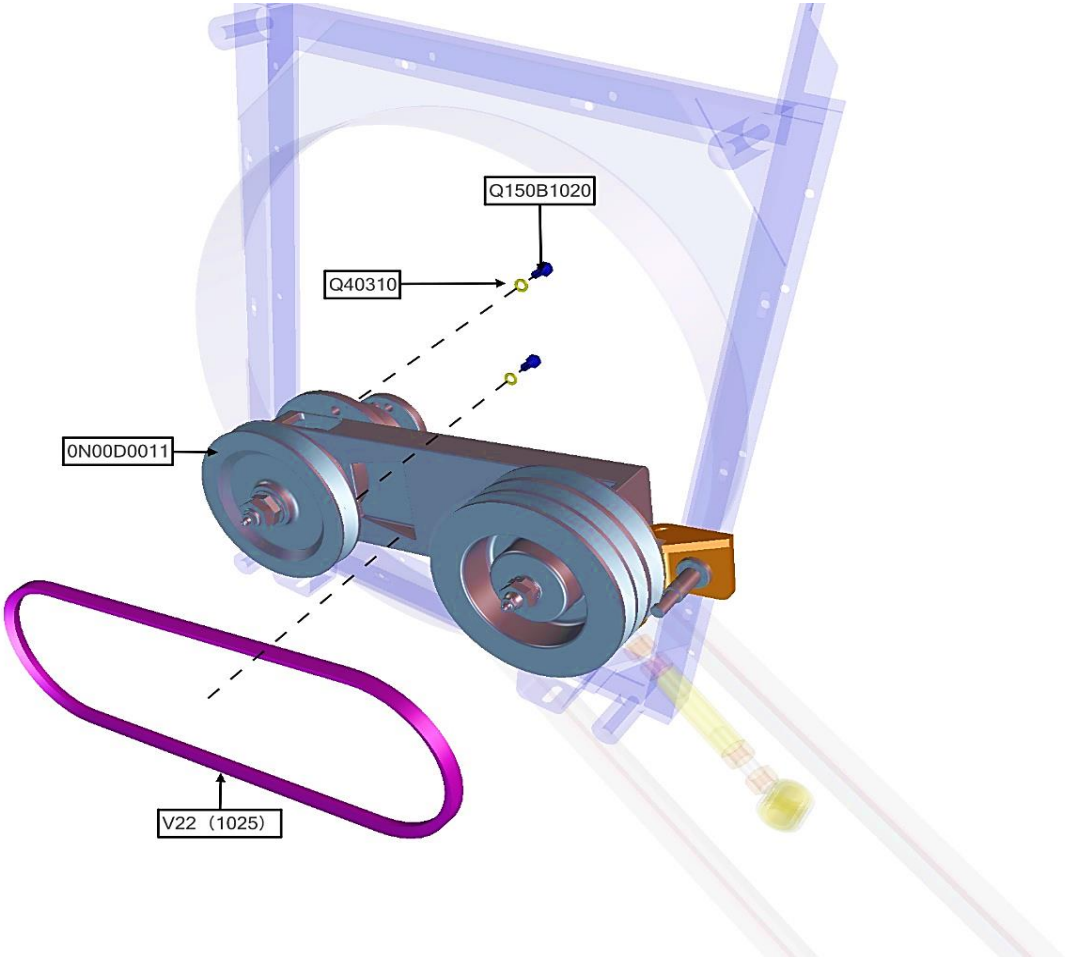

NAME_ASSB	CODE_PART NO	NAME	QTY
FAN DRIVING ASSY	0N00D0011	FAN DRIVING - ASSY	1
	Q150B1020	BOLT 12020150	4
	Q40310	SPLIT WASHER Ø10	4
	V22（1025）	BELT	1

NAME_ASSB	CODE_PART NO	NAME	QTY
FAN DRIVING ASSY			

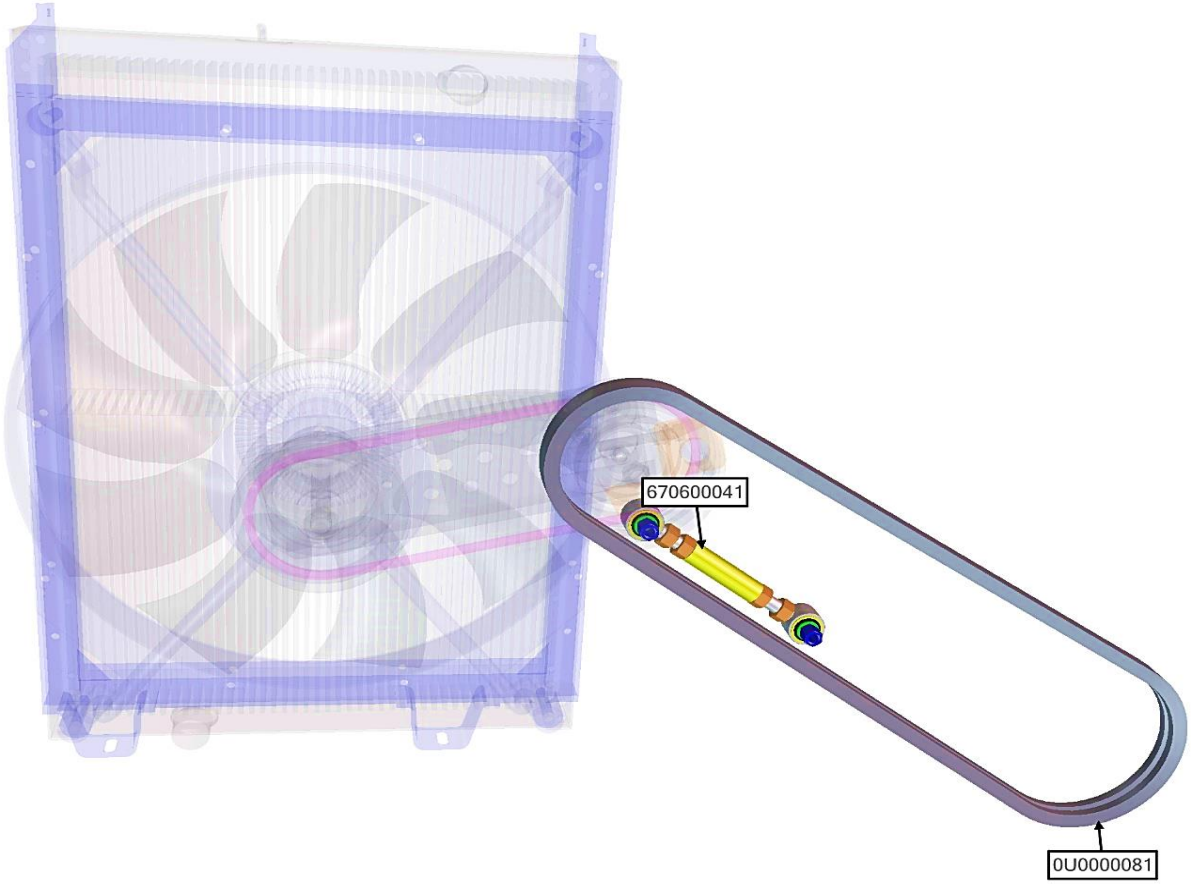

NAME_ASSB	CODE_PART NO	NAME	QTY
TURNBUCKLE - ASSY	0U0000081	BELT	1
	670600041	TURNBUCKLE	1

NAME_ASSB	CODE_PART NO	NAME	QTY
TURNBUCKLE - ASSY			

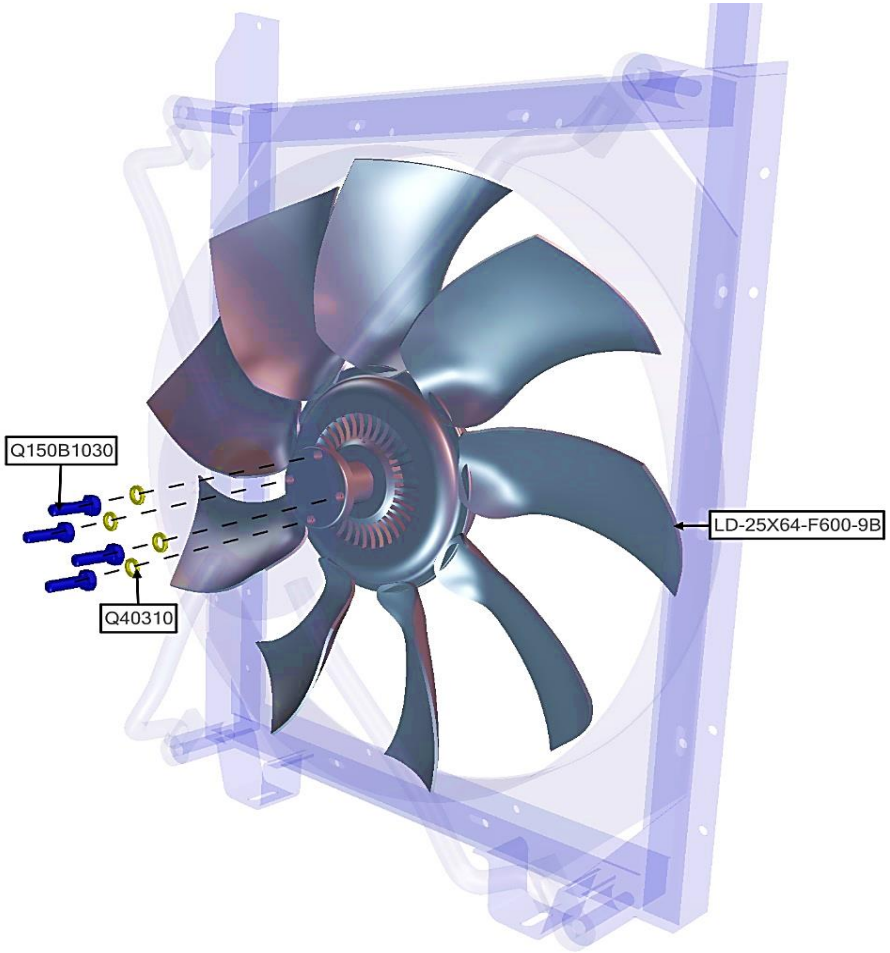

NAME_ASSB	CODE_PART NO	NAME	QTY
COOLING FAN	LD-25X64-F600-9B	COOLING FAN	1
	Q150B1030	BOLT 10030150	4
	Q40310	SPLIT WASHER Ø10	4

NAME_ASSB	CODE_PART NO	NAME	QTY
COOLING FAN			

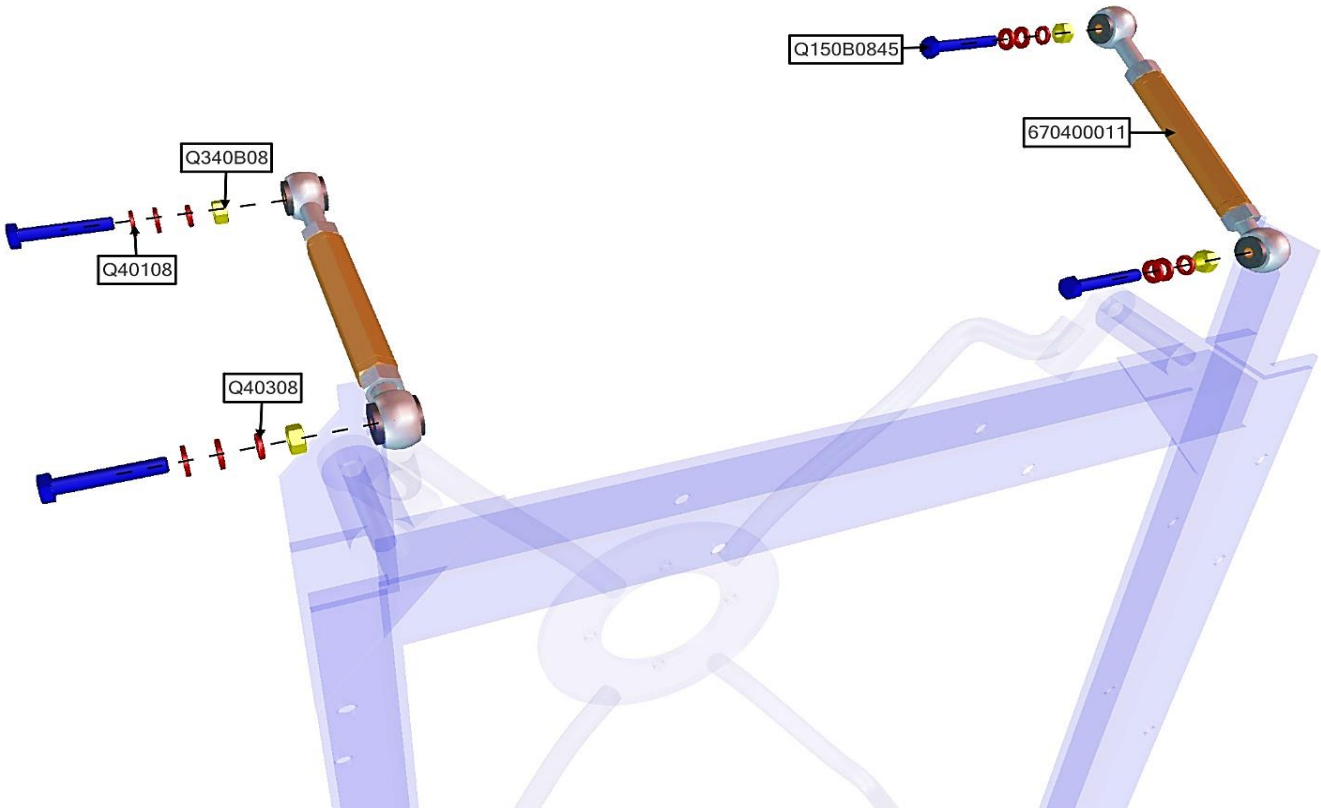

NAME_ASSB	CODE_PART NO	NAME	QTY
TURNBUCKLE	670400011	TURNBUCKLE	2
	Q150B0845	BOLT 08045125	4
	Q340B08	NUT 08125	4
	Q40108	WASHER Ø08	8
	Q40308	SPLIT WASHER Ø08	4

NAME_ASSB	CODE_PART NO	NAME	QTY
TURNBUCKLE			

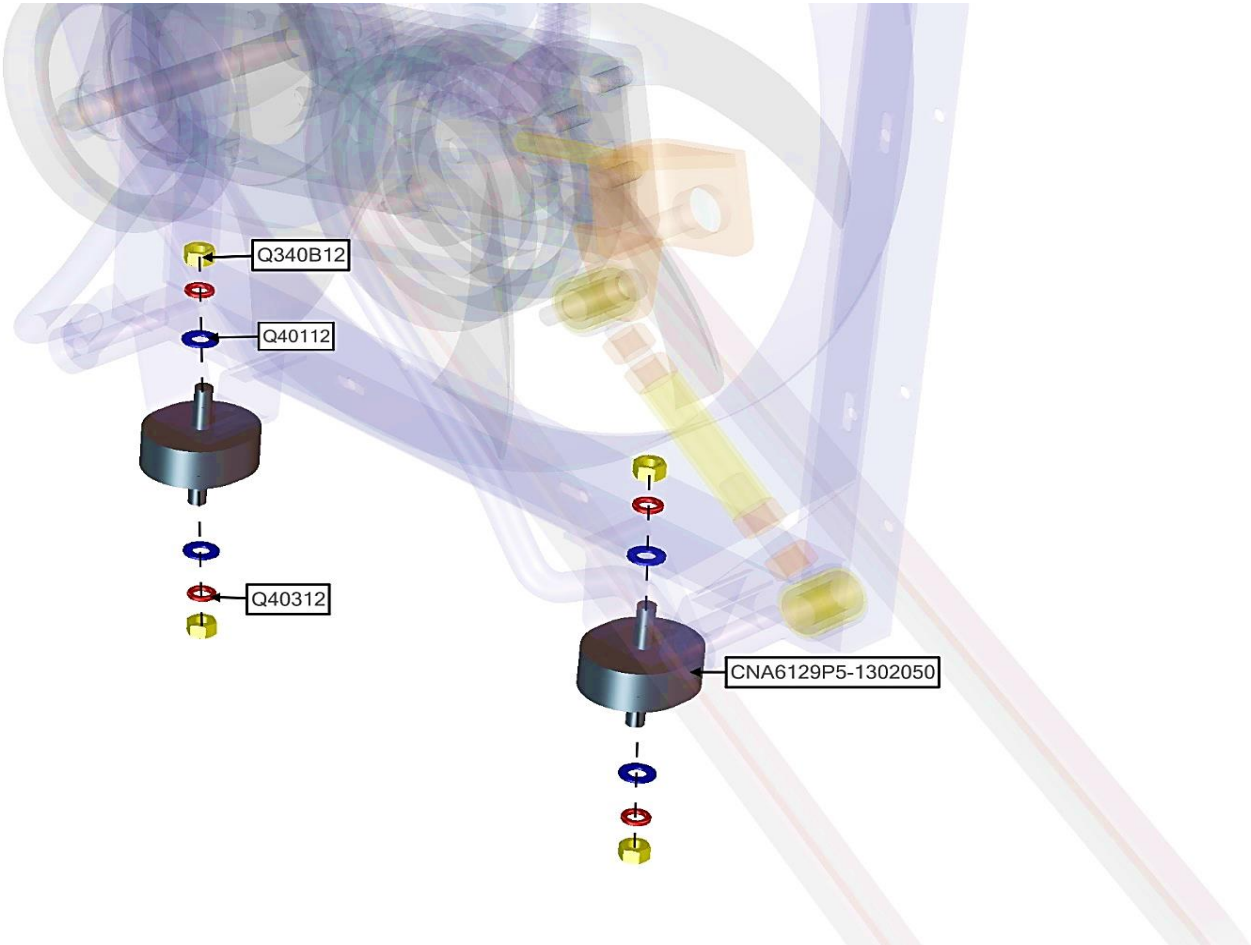

NAME_ASSB	CODE_PART NO	NAME	QTY
RADIATOR FRAME - ASSY	CNA6129P5-1302050	RADIATOR RUBBER	2
	Q340B12	NUT 12175	4
	Q40112	WASHER Ø12	4
	Q40312	SPLIT WASHER Ø12	4

NAME_ASSB	CODE_PART NO	NAME	QTY
RADIATOR FRAME - ASSY			

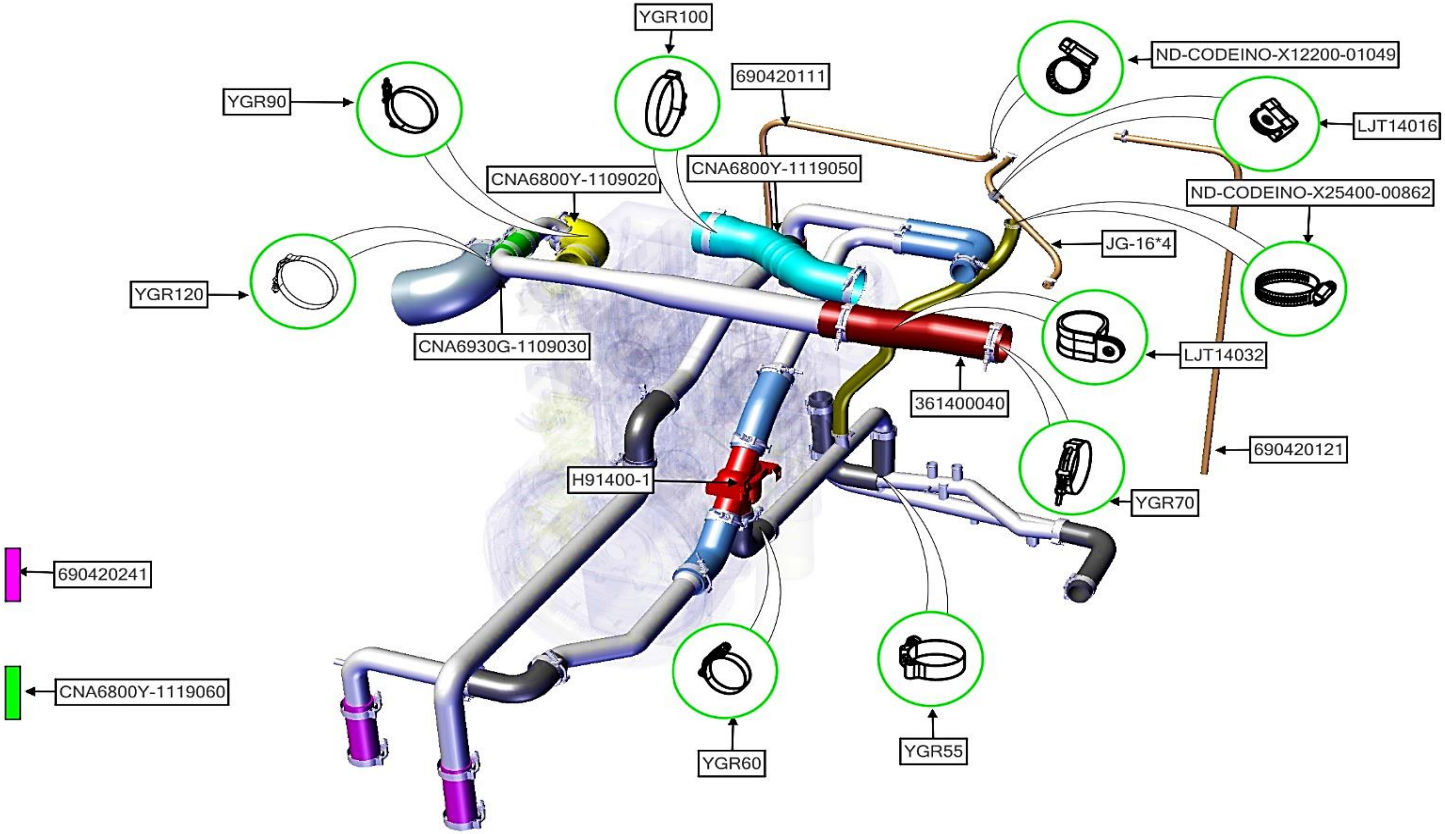

NAME_ASSB	CODE_PART NO	NAME	QTY
COOLING PIPE - ASSY	690420121	PIPE	1
	690420111	PIPE	1
	JG-16*4	PIPE	1
	CNA6800Y-1109020	RUBBER PIPE	1
	690420241	PIPE	2
	CNA6800Y-1119060	PIPE	2
	361400040	PIPE	1

NAME_ASSB	CODE_PART NO	NAME	QTY
COOLING PIPE - ASSY	CNA6800Y-1119050	PIPE	1
	CNA6930G-1109030	PIPE	1
	YGR120	CLAMP Ø120	1
	YGR100	CLAMP Ø100	1
	YGR90	CLAMP Ø90	2
	YGR70	CLAMP Ø70	4
	YGR60	CLAMP Ø60	14

NAME_ASSB	CODE_PART NO	NAME	QTY
COOLING PIPE - ASSY	YGR55	CLAMP Ø55	8
	ND-CODEINO-X25400-00862	CLAMP 25-40	2
	ND-CODEINO-X12200-01049	CLAMP 12-20	5
	LJT14032	CLAIM Ø32	1
	LJT14016	CLIP Ø16	1
	H91400-1	THEMOSTAT	1

NAME_ASSB	CODE_PART NO	NAME	QTY
COOLING PIPE - ASSY			

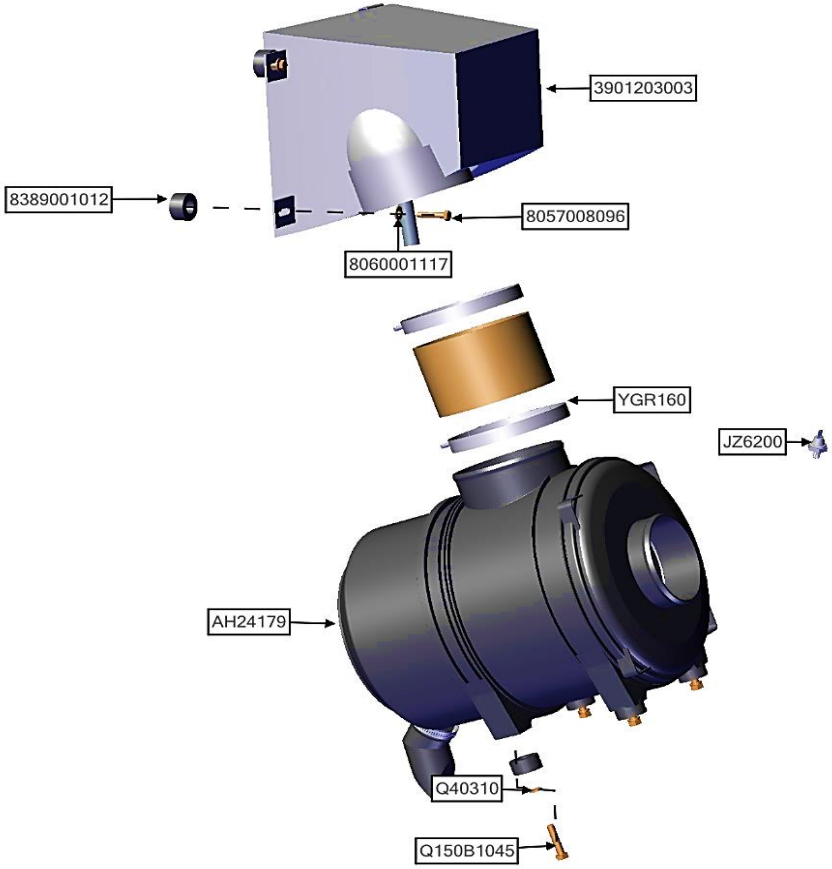

NAME_ASSB	CODE_PART NO	NAME	QTY
AIR FILTER - ASSY	Q40310	SPLIT WASHER Ø10	4
	YGR160	CLAMP Ø160	2
	8060001117	WASHER Ø08	4
	3901203003	AIR FILTER PIPE	1
	JZ6200	AIR FILTER SENSOR	1
	8389001012	AIR FILTER RUBBER	8
	AH24179	AIR FILTER - ASSY	1

NAME_ASSB	CODE_PART NO	NAME	QTY
AIR FILTER - ASSY	Q150B1045	BOLT 10045150	4
	8057008096	BOLT 08040125	4

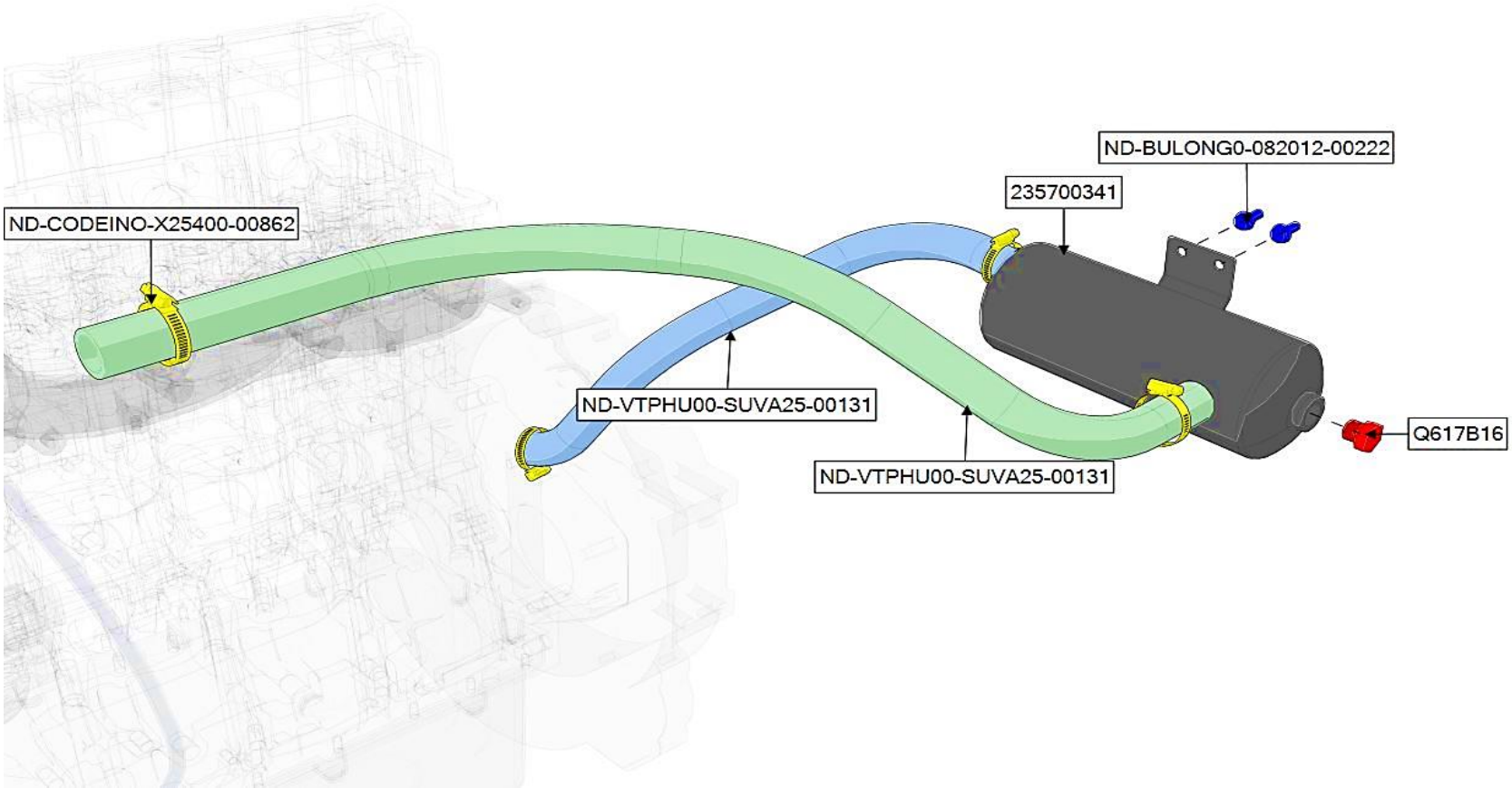

NAME_ASSB	CODE_PART NO	NAME	QTY
SILENT TANK - ASSY	ND-BULONG0-082012-00222	BOLT 08020125	2
	Q617B16	NUT M16	1
	235700341	SILENT TANK	1
	ND-VTPHU00-SUVA25-00131	PIPE	1
	ND-VTPHU00-SUVA25-00131	RUBBER PIPE	1
	ND-CODEINO-X25400-00862	CLAMP 25-40	4

NAME_ASSB	CODE_PART NO	NAME	QTY
SILENT TANK - ASSY			

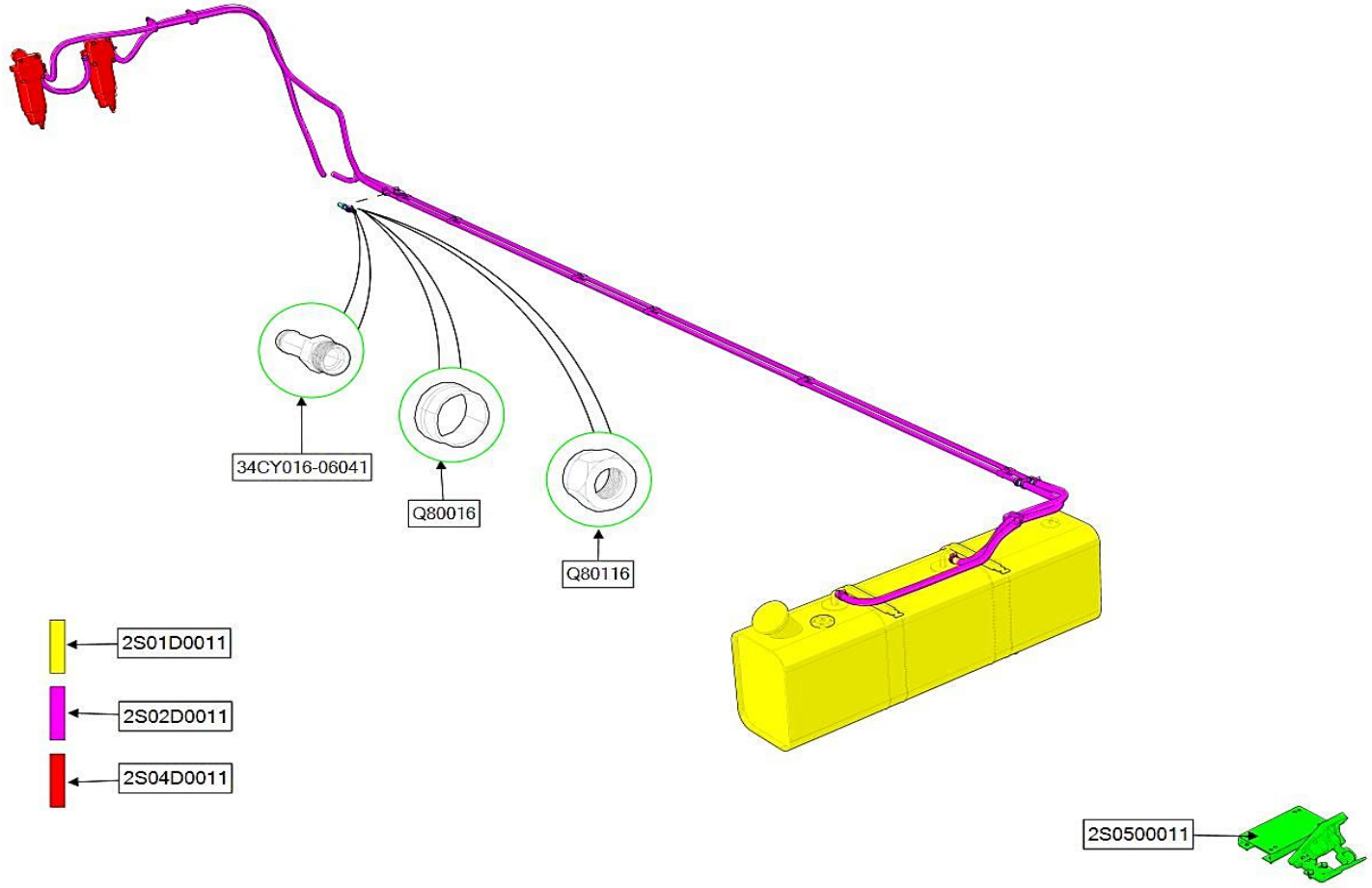

NAME_ASSB	CODE_PART NO	NAME	QTY
FUEL SYSTEM	34CY016-06041	CONNECTOR PIPE Ø16	4
	Q80116	NUT M22	4
	Q80016	OUTER CONNECTOR Ø16	4
	2S01D0011	FUEL TANK - ASSY	1
	2S04D0011	FUEL FILTER	1
	2S0500011	ACCELABRATOR PEDAL - ASSY	1
	2S02D0011	FUEL PIPE - ASSY	1

NAME_ASSB	CODE_PART NO	NAME	QTY
FUEL SYSTEM			

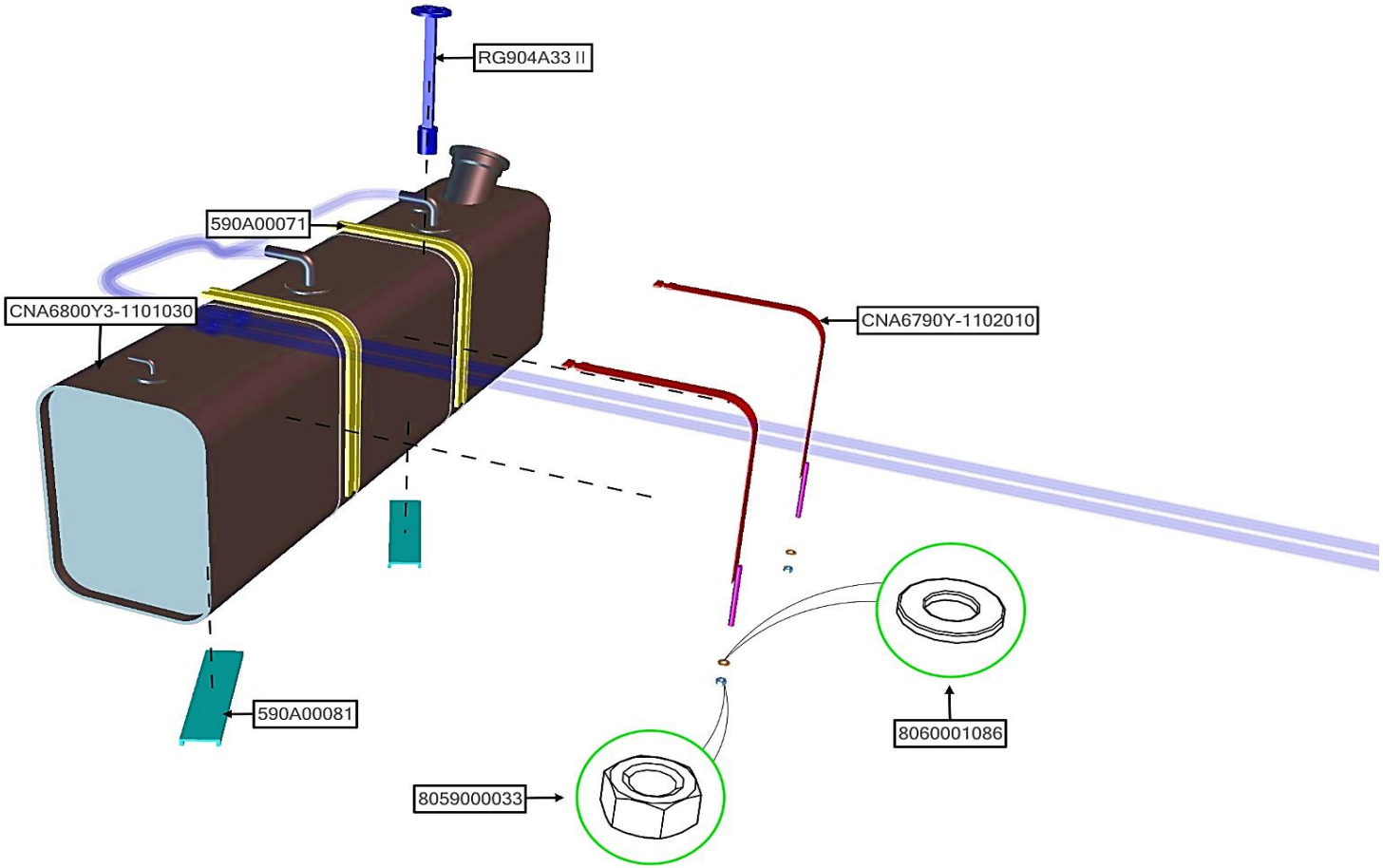

NAME_ASSB	CODE_PART NO	NAME	QTY
FUEL TANK - ASSY	8060001086	WASHER Ø10	2
	590A00081	RUBBER WASHER	2
	590A00071	RUBBER WASHER	2
	8059000033	NUT 10125	2
	CNA6790Y-1102010	FUEL TANK BELT	2
	CNA6800Y3-1101030	TANK FUEL	1
	RG904A33 Ⅱ	FULE SENSOR	1

NAME_ASSB	CODE_PART NO	NAME	QTY
FUEL TANK - ASSY			

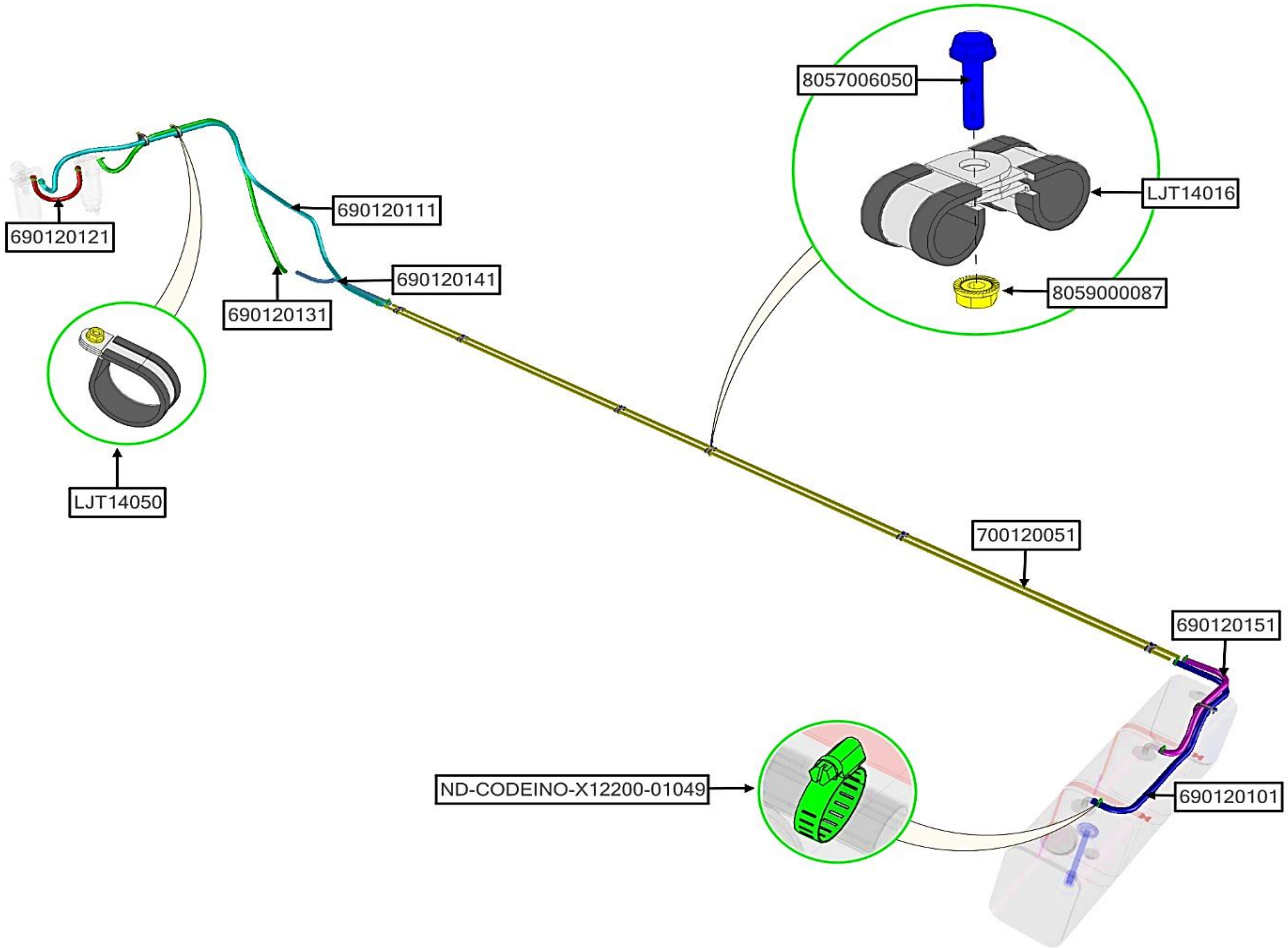

NAME_ASSB	CODE_PART NO	NAME	QTY
FUEL PIPE - ASSY	LJT14016	CLIP Ø16	12
	ND-CODEINO-X12200-01049	CLAMP 16-27	10
	8059000087	NUT 06100	9
	8057006050	BOLT 06025100	7
	LJT14050	CLAIM Ø50	3
	700120051	STEEL PIPE	2
	690120101	FUEL PIPE 01	1

NAME_ASSB	CODE_PART NO	NAME	QTY
FUEL PIPE - ASSY	690120151	FUEL PIPE 06	1
	690120111	FUEL PIPE 02	1
	690120131	FUEL PIPE 04	1
	690120121	FUEL PIPE 03	1
	690120141	FUEL PIPE 05	1

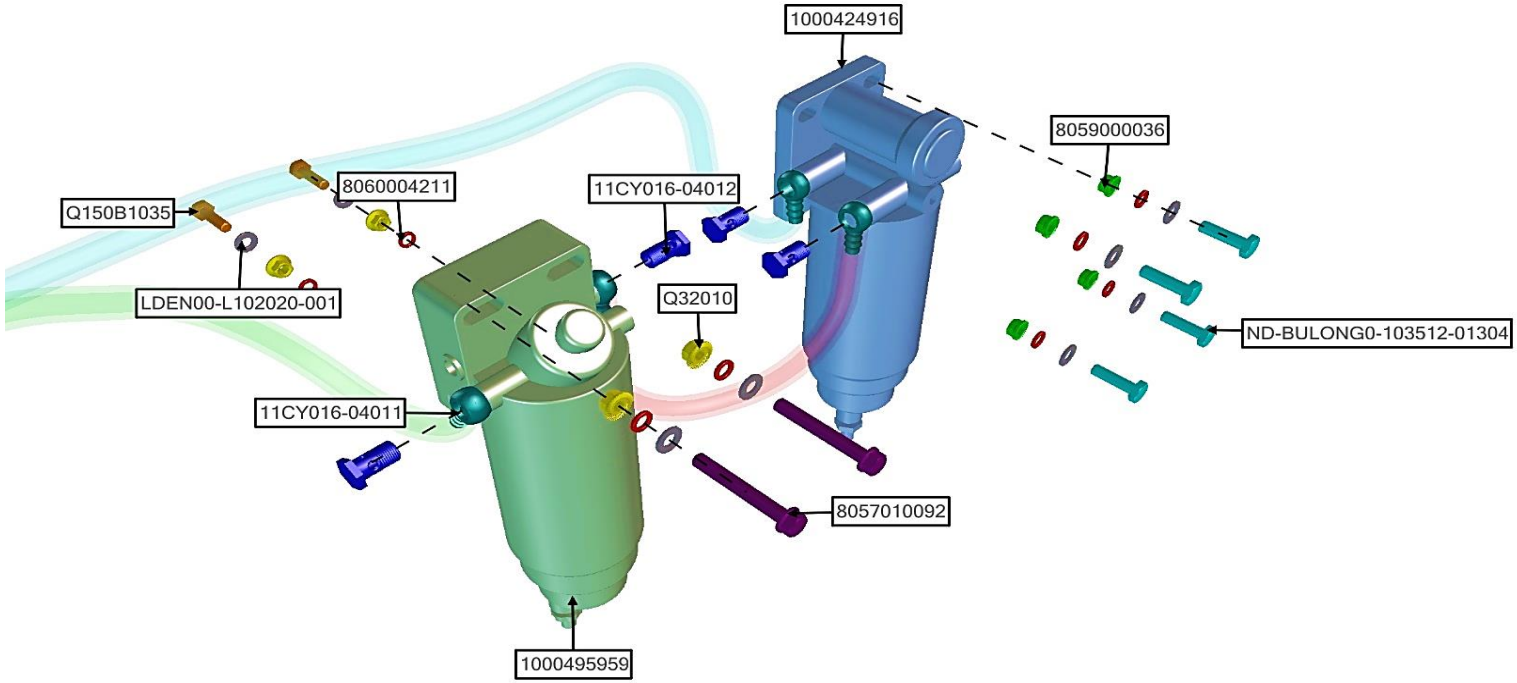

NAME_ASSB	CODE_PART NO	NAME	QTY
FUEL FILTER	LDEN00-L102020-001	WASHER Ø10	8
	8060004211	SPLIT WASHER Ø10	8
	11CY016-04012	HOLLOW BOLT M16	4
	11CY016-04011	FUEL DISTRIBUTOR Ø16	4
	8059000036	NUT 10125	4
	Q32010	NUT 10150	4

NAME_ASSB	CODE_PART NO	NAME	QTY
FUEL FILTER	ND-BULONG0-103512-01304	BOLT 10035125	4
	Q150B1035	BOLT 10035150	2
	8057010092	BOLT 10070150	2
	1000424916	FILTER	1
	1000495959	FILTER	1

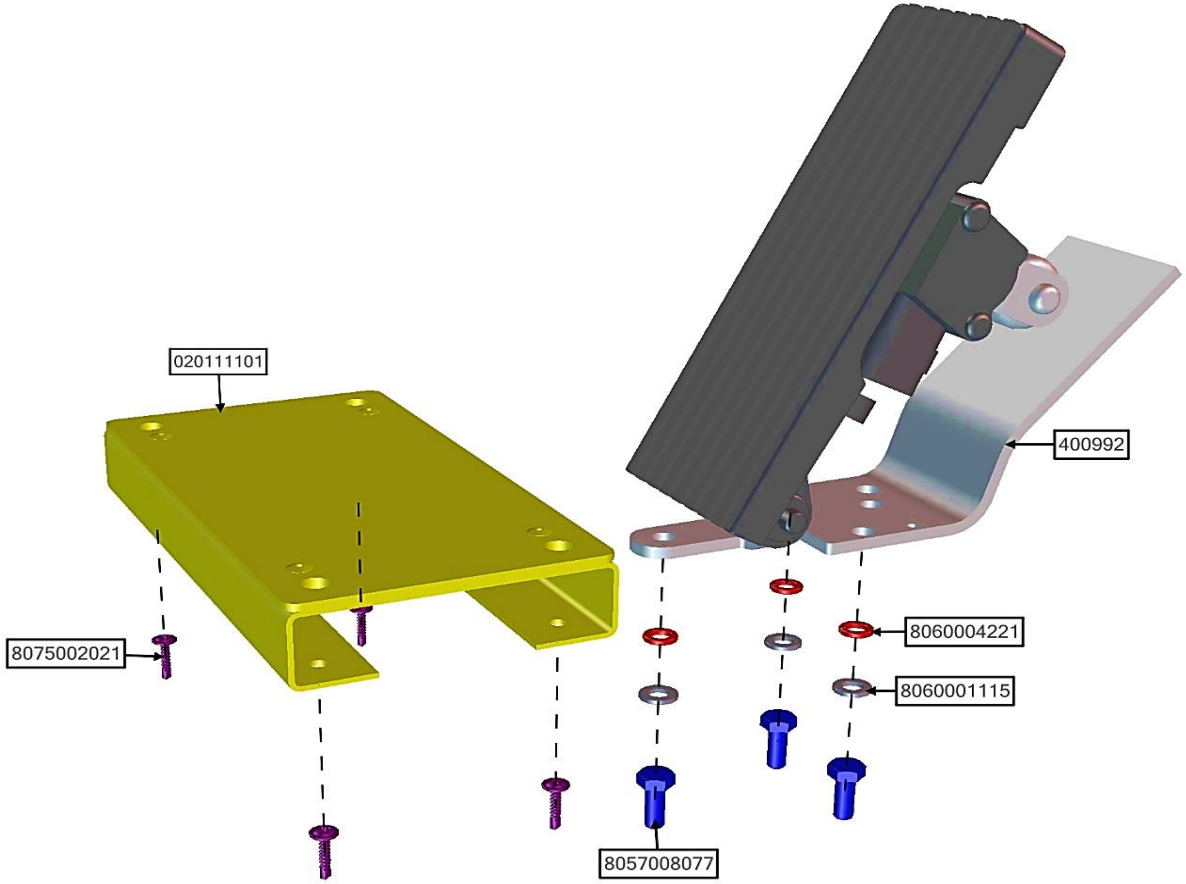

NAME_ASSB	CODE_PART NO	NAME	QTY
ACCELABRATOR PEDAL - ASSY	8075002021	CREW 0420	4
	8060001115	WASHER Ø08	3
	8060004221	SPLIT WASHER Ø08	3
	8057008077	BOLT 08020125	3
	400992	ACCELABRATE PEDAL	1
	020111101	BRACKET	

NAME_ASSB	CODE_PART NO	NAME	QTY
ACCELABRATOR PEDAL - ASSY			

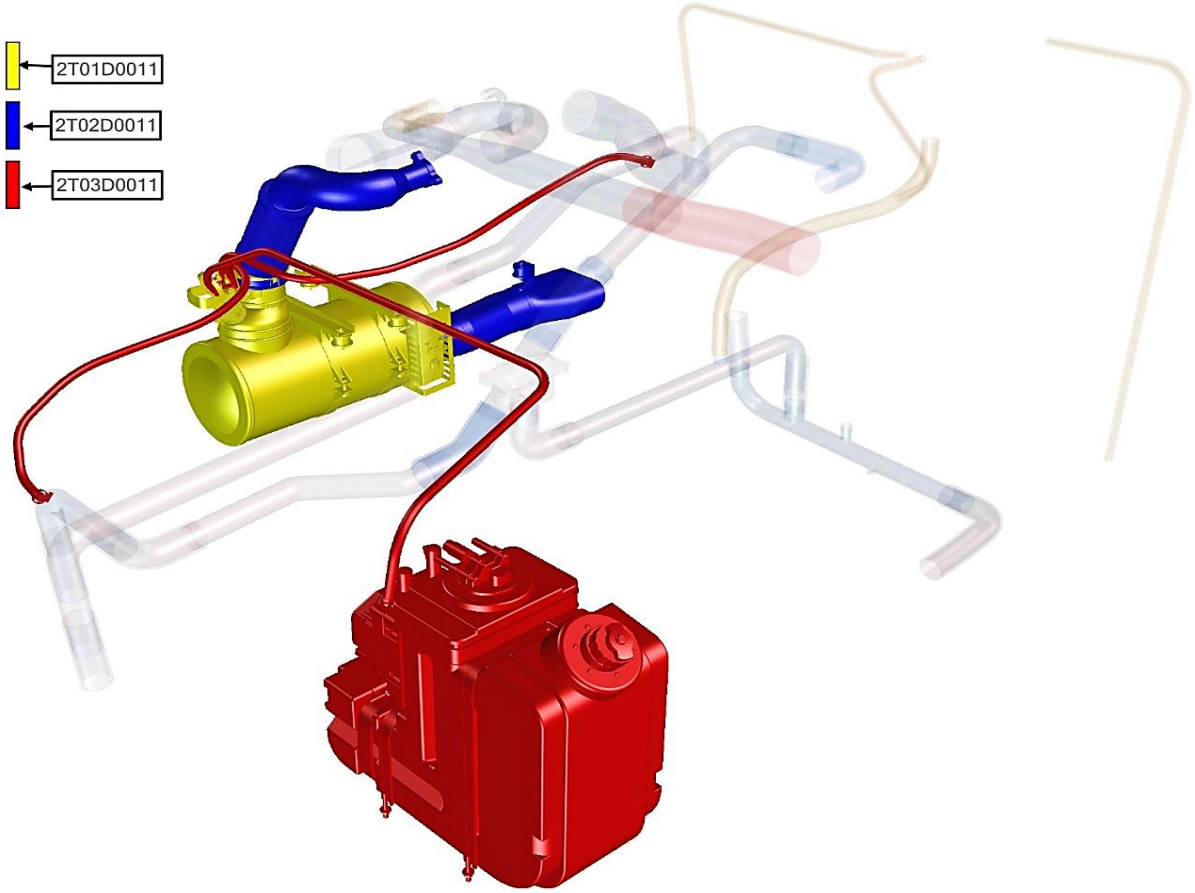

NAME_ASSB	CODE_PART NO	NAME	QTY
EXHAUST AIR SYSTEM	2T01D0011	SCR TANK - ASSY	1
	2T03D0011	UREA TANK - ASSY	1
	2T02D0011	EXHAUST PIPE - ASSY	1

NAME_ASSB	CODE_PART NO	NAME	QTY
EXHAUST AIR SYSTEM			

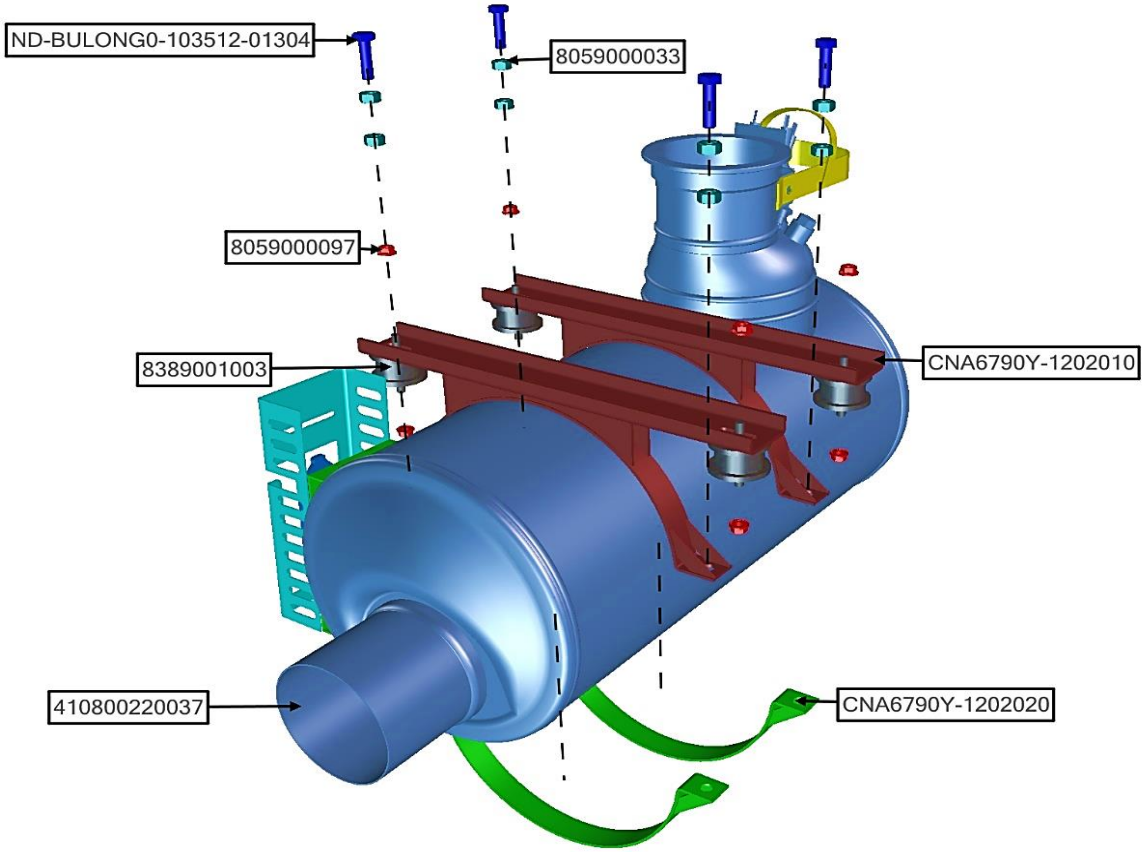

NAME_ASSB	CODE_PART NO	NAME	QTY
SCR TANK - ASSY	8059000033	NUT 10125	8
	8059000097	NUT 08125	8
	8389001003	RUBBER WASHER	4
	ND-BULONG0-103512-01304	BOLT 10035125	4
	CNA6790Y-1202020	LOWER SCR TANK BELT	2
	CNA6790Y-1202010	UPPER SCR TANK BELT	2
	410800220037	SCR TANK	1

NAME_ASSB	CODE_PART NO	NAME	QTY
SCR TANK - ASSY			

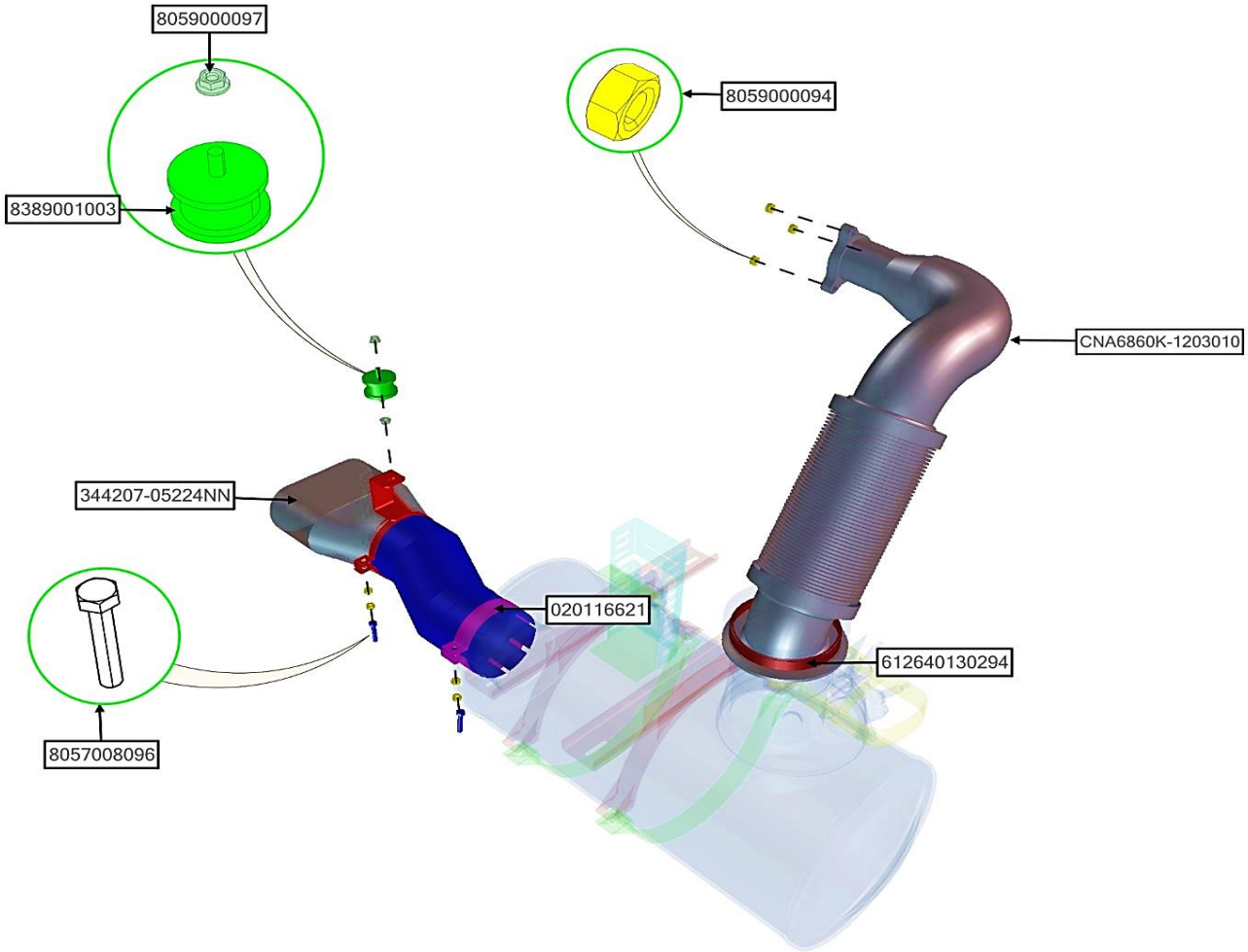

NAME_ASSB	CODE_PART NO	NAME	QTY
EXHAUST PIPE - ASSY	8059000094	NUT 08125	7
	8059000097	NUT 08125	2
	8057008096	BOLT 08040125	2
	CNA6860K-1203010	EXHAUST PIPE	1
	612640130294	CLIP	1
	8389001003	RUBBER WASHER	1
	020116621	CLIP	1

NAME_ASSB	CODE_PART NO	NAME	QTY
EXHAUST PIPE - ASSY	344207-05224NN	EXHAUST TAIL PIPE	1
	020116471	EXHAUST TAIL PIPE	1

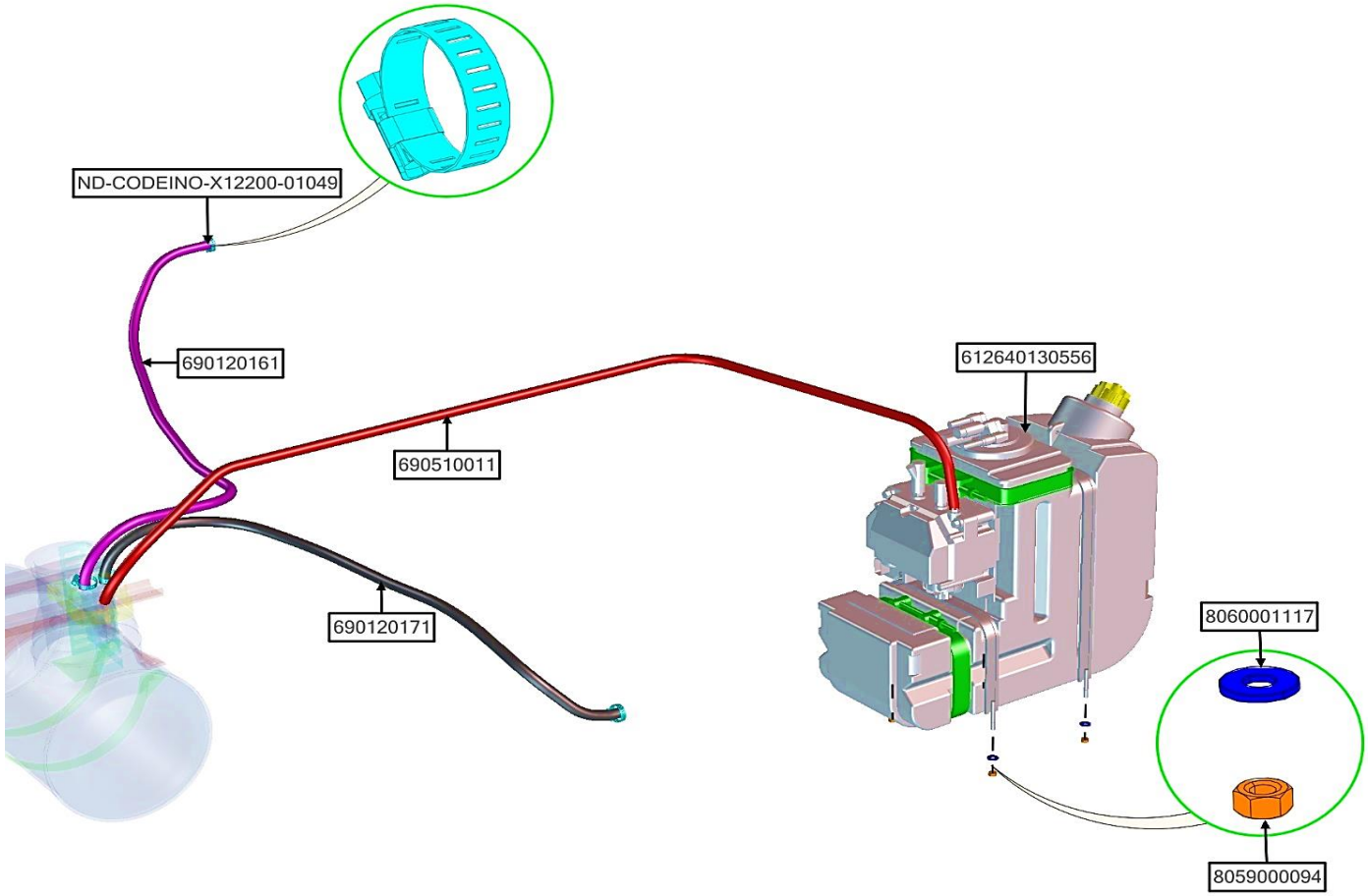

NAME_ASSB	CODE_PART NO	NAME	QTY
CATALYSIS ASSY	ND-CODEINO-X12200-01049	CLAMP 16-27	4
	8060001117	WASHER Ø08	4
	8059000094	NUT 08125	4
	690120171	PIPE	1
	690120161	PIPE	1
	690510011	PIPE	1
	612640130556	UREA TANK	1

NAME_ASSB	CODE_PART NO	NAME	QTY
CATALYSIS ASSY			

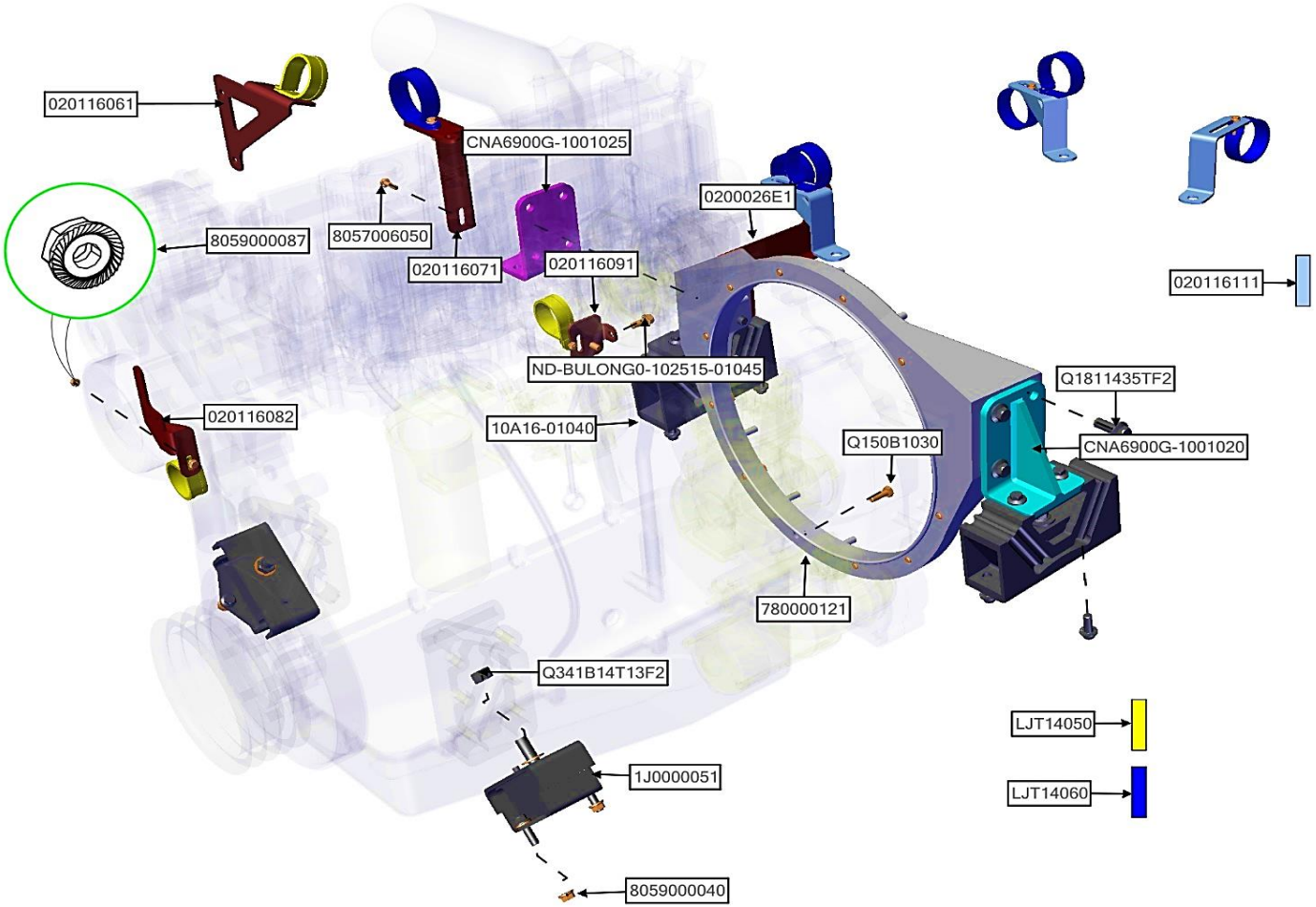

NAME_ASSB	CODE_PART NO	NAME	QTY
MINOR ITEMS	Q1811435TF2	BOLT 14035150	8
	Q341B14T13F2	NUT 14150	2
	Q150B1030	BOLT 10030150	12
	ND-BULONG0-102515-01045	BOLT 10025150	2
	LJT14060	CLIP Ø60	6
	LJT14050	CLAIM Ø50	3
	CNA6900G-1001025	REAR ENGINE FOOT RH	1

NAME_ASSB	CODE_PART NO	NAME	QTY
MINOR ITEMS	CNA6900G-1001020	REAR ENGINE FOOT LH	1
	8059000087	NUT 06100	9
	8059000040	NUT 10150	4
	8057006050	CONNECTOR 620044	10
	780000121	FLANGE	1
	020116111	BRACKET	3
	020116091	BRACKET	1

NAME_ASSB	CODE_PART NO	NAME	QTY
MINOR ITEMS	020116082	BRACKET	1
	020116071	BRACKET	1
	020116061	BRACKET	1
	0200026E1	BRACKET	1
	10A16-01040	REAR RUBBER CUSHION	2
	1J0000051	LEFR RUBBER CUSHION	2

NAME_ASSB	CODE_PART NO	NAME	QTY
MINOR ITEMS			

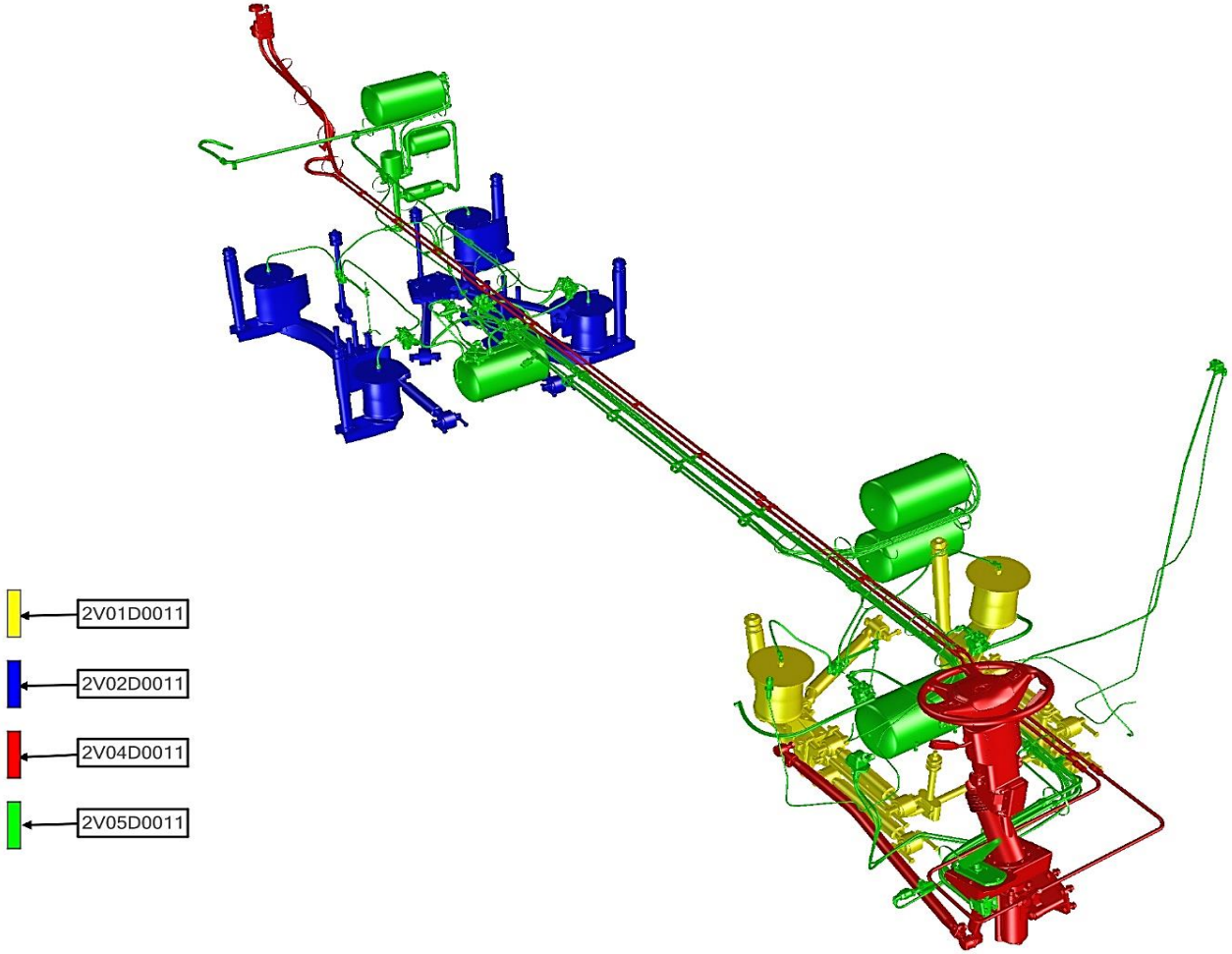

NAME_ASSB	CODE_PART NO	NAME	QTY
CHASSIS FUNCTION SYSTEM	2V01D0011	FRONT SUSPENSION SYSTEM	1
	2V02D0011	REAR SUSPENSION SYSTEM	1
	2V04D0011	STEERING SYSTEM	1
	2V05D0011	AIR COMPRESION SYSTEM	1

NAME_ASSB	CODE_PART NO	NAME	QTY
CHASSIS FUNCTION SYSTEM			

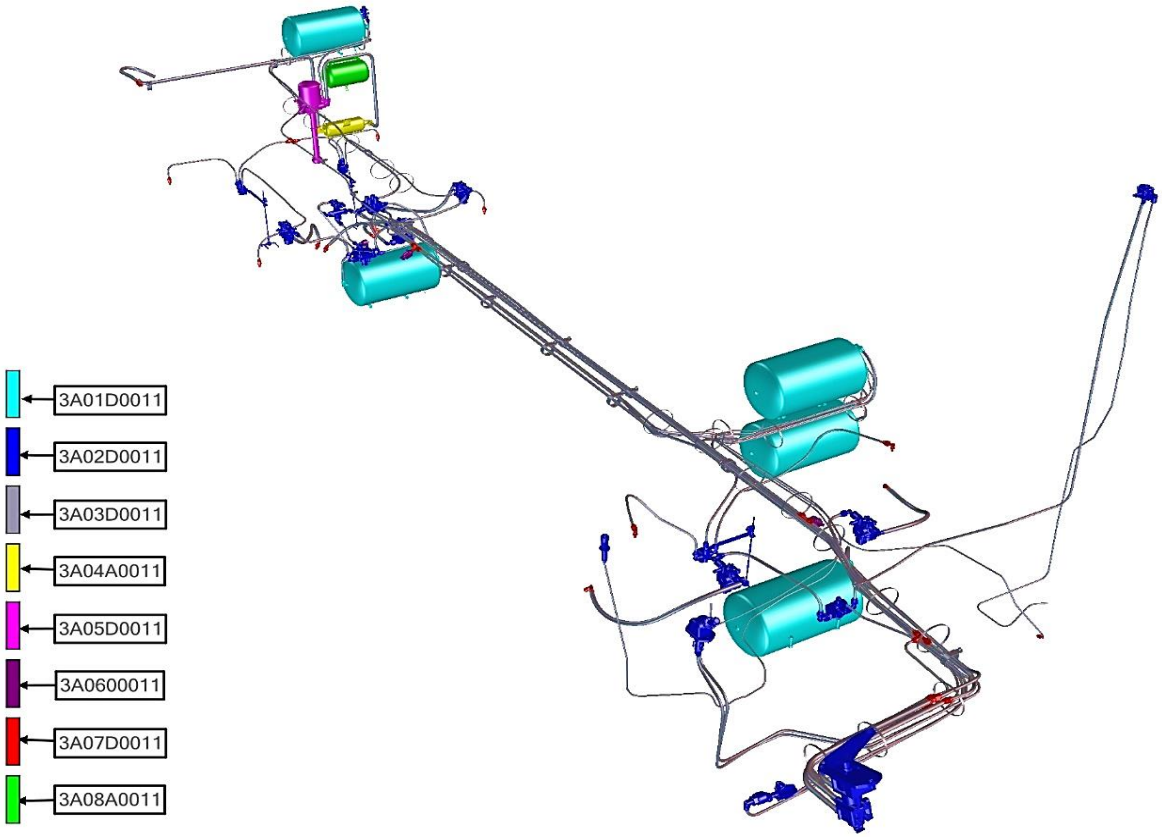

NAME_ASSB	CODE_PART NO	NAME	QTY
AIR COMPRESION SYSTEM	3A02D0011	AIR VALVE	1
	3A07D0011	CONNECTOR SYSTEM	1
	3A03D0011	AIR PIPING	1
	3A08A0011	PURGE TANK - ASSY	1
	3A04A0011	WATER EXHAUST TANK - ASSY	1
	3A05D0011	DRYER ASSY	1
	3A01D0011	AIR TANK - ASSY	1

NAME_ASSB	CODE_PART NO	NAME	QTY
AIR COMPRESION SYSTEM	3A0600011	SENSOR	1

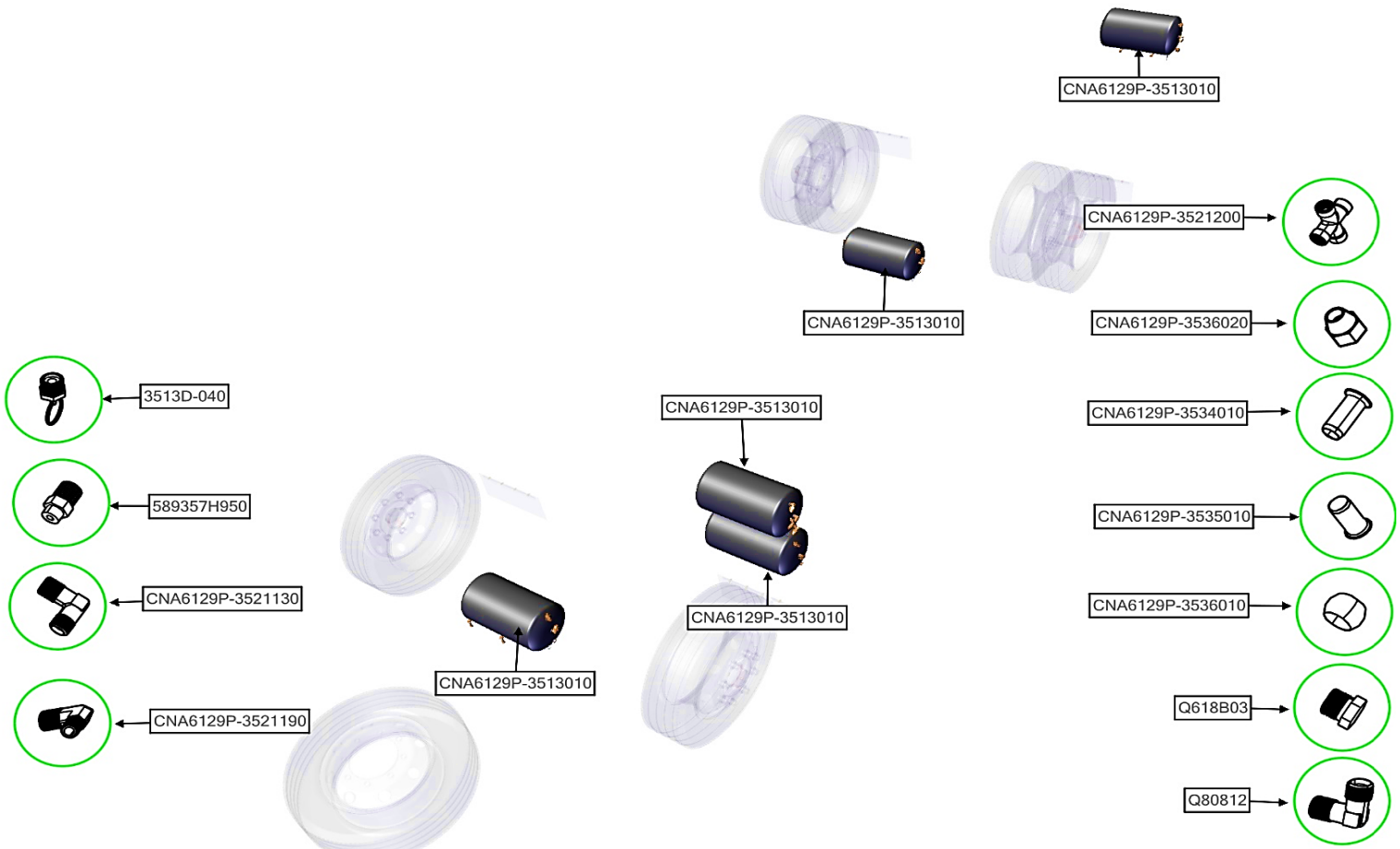

NAME_ASSB	CODE_PART NO	NAME	QTY
AIR TANK - ASSY	8057010090	BOLT 10045125	1
	CNA6127G-3513010	AIR TANK 20L	1
	CNA6129P-3513010	AIR TANK 30L	4
	Q618B03	NUT Z3/8	1
	CNA6129P-3521200	CONNECTOR Z1/4	1
	Q80812	CONNECTOR M18-Z3/8	1
	CNA6129P-3521130	CONNECTOR Z3/8-M16	1

NAME_ASSB	CODE_PART NO	NAME	QTY
AIR TANK - ASSY	CNA6129P-3521190	CONNECTOR Z3/8-Z1/4	1
	589357H950	CONNECTOR	3
	3513D-040	DRAIN VALVE	1
	8059000033	NUT 10125	1
	CNA6129P-3536010	NUT M16	1
	CNA6129P-3536020	NUT M18	1
	CNA6129P-3535010	OUTER CONNECTOR Ø9.6	1

NAME_ASSB	CODE_PART NO	NAME	QTY
AIR TANK - ASSY	CNA6129P-3535020	OUTER CONNECTOR Ø9.6	1
	CNA6129P-3534010	INNER CONNECTOR Ø9.6	1
	CNA6129P-3534020	INNER CONNECTOR Ø12.7	1

NAME_ASSB	CODE_PART NO	NAME	QTY
AIR TANK - ASSY			

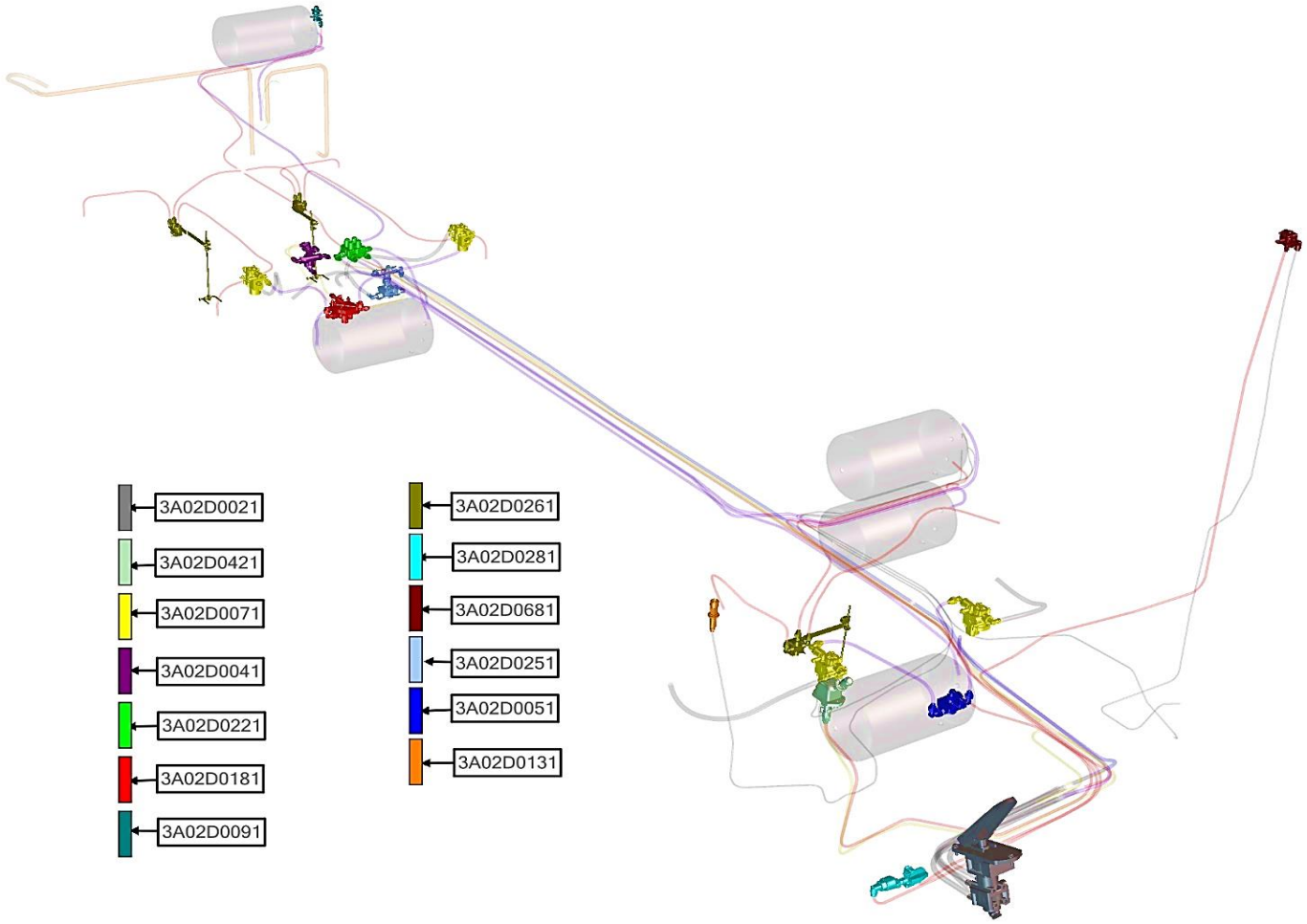

NAME_ASSB	CODE_PART NO	NAME	QTY
AIR VALVE	3A02D0091	CHECK VALVE ASSY	1
	3A02D0681	ABOVE EMERGENCY VALVE	1
	3A02D0281	BELOW EMERGENCY VALVE	1
	3A02D0051	FRONT DISTRIBUTOR VALVE - ASSY	1
	3A02D0181	REAR DISTRIBUTOR VALVE - ASSY	1
	3A02D0251	DISTRIBUTOR VALVE - ASSY	1
	3A02D0421	VALVE PARKING BRAKE	1

NAME_ASSB	CODE_PART NO	NAME	QTY
AIR VALVE	3A02D0041	ASR VAVLE - ASSY	1
	3A02D0131	SPRAYING VALVE - ASSY	1
	3A02D0021	CONTROLING VALVE - ASSY	1
	3A02D0261	AIR SUSPENSION LEVELING VALVE - ASSY	1
	3A02D0221	TOTAL CHECK VALVE - ASSY	1
	3A02D0071	ABS VALVE - ASSY	1

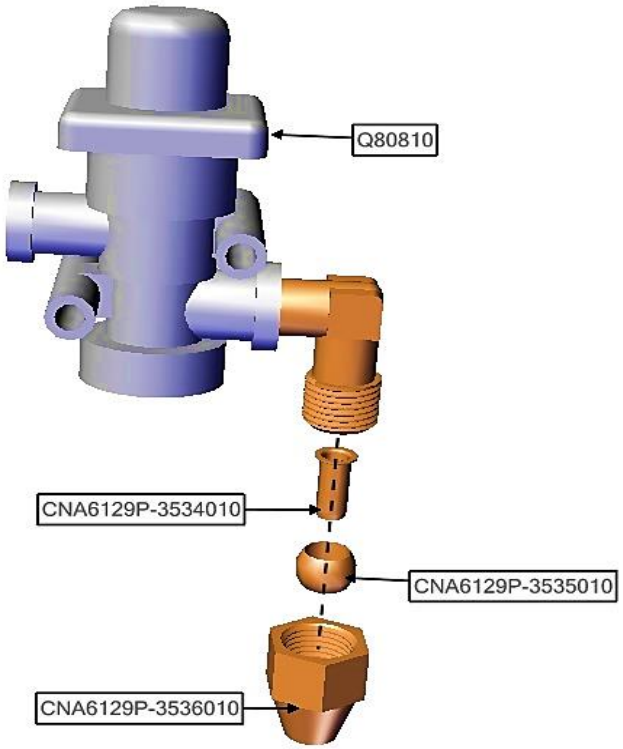

NAME_ASSB	CODE_PART NO	NAME	QTY
CHECK VALVE ASSY	CNA6129P-3534010	INNER CONNECTOR Ø9.6	1
	CNA6129P-3535010	OUTER CONNECTOR Ø9.6	1
	CNA6129P-3536010	NUT M16	1
	Q80810	CONNECTOR M16-Z1/4	1

NAME_ASSB	CODE_PART NO	NAME	QTY
CHECK VALVE ASSY			

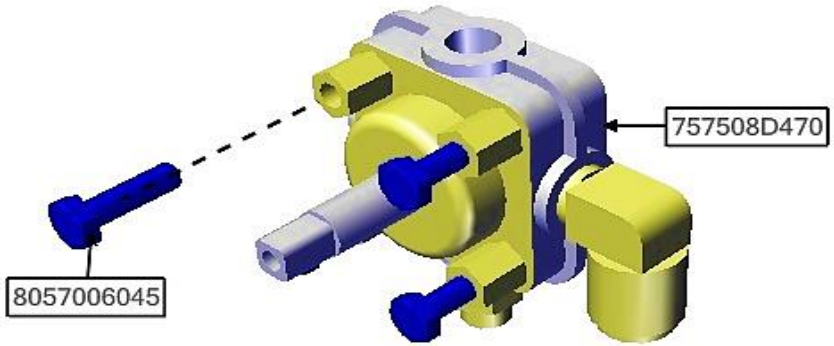

NAME_ASSB	CODE_PART NO	NAME	QTY
ABOVE EMERGENCY VALVE	757508D470	ABOVE EMERGENCY VALVE	1
	8057006045	BOLT 06020100	4

NAME_ASSB	CODE_PART NO	NAME	QTY
ABOVE EMERGENCY VALVE			

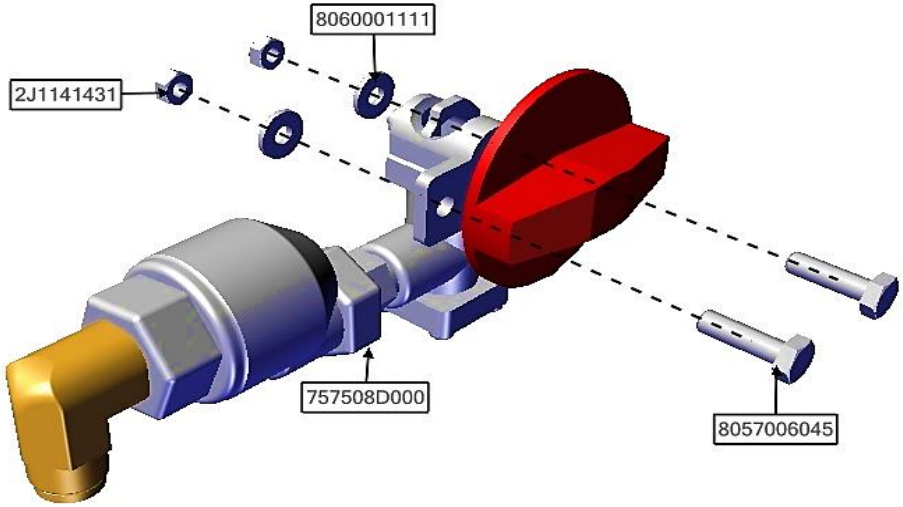

NAME_ASSB	CODE_PART NO	NAME	QTY
BELOW EMERGENCY VALVE	2J1141431	NUT 06100	2
	8060001111	WASHER Ø06	2
	757508D000	BELOW EMERGENCY VALVE	1
	8057006045	BOLT 06020100	2

NAME_ASSB	CODE_PART NO	NAME	QTY
BELOW EMERGENCY VALVE			

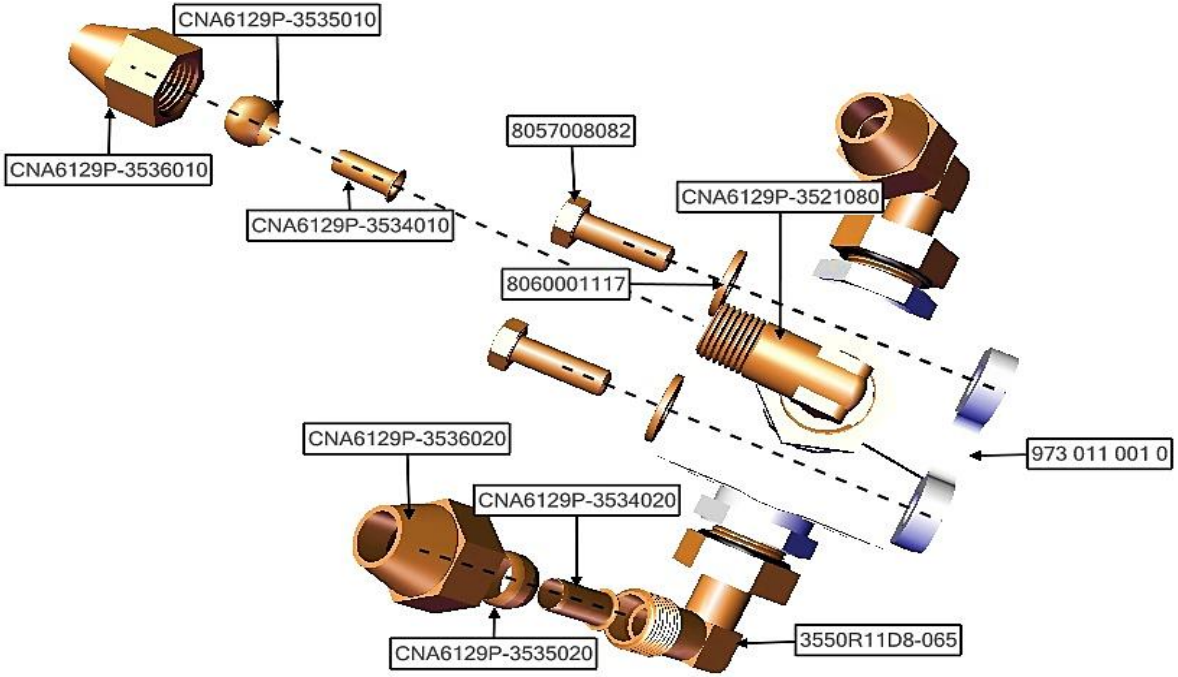

NAME_ASSB	CODE_PART NO	NAME	QTY
FRONT DISTRIBUTOR VALVE - ASSY	CNA6129P-3534020	INNER CONNECTOR Ø12.7	1
	CNA6129P-3534010	INNER CONNECTOR Ø9.6	1
	CNA6129P-3535020	OUTER CONNECTOR Ø9.6	1
	CNA6129P-3535010	OUTER CONNECTOR Ø9.6	1
	CNA6129P-3536020	NUT M18	1
	CNA6129P-3536010	NUT M16	1
	8060001117	WASHER Ø08	2

NAME_ASSB	CODE_PART NO	NAME	QTY
FRONT DISTRIBUTOR VALVE - ASSY	973 011 001 0	DRAIN VALVE	1
	3550R11D8-065	CONNECTOR M22-M18	2
	CNA6129P-3521080	CONNECTOR M22-M16	1
	8057008082	BOLT 08025125	2

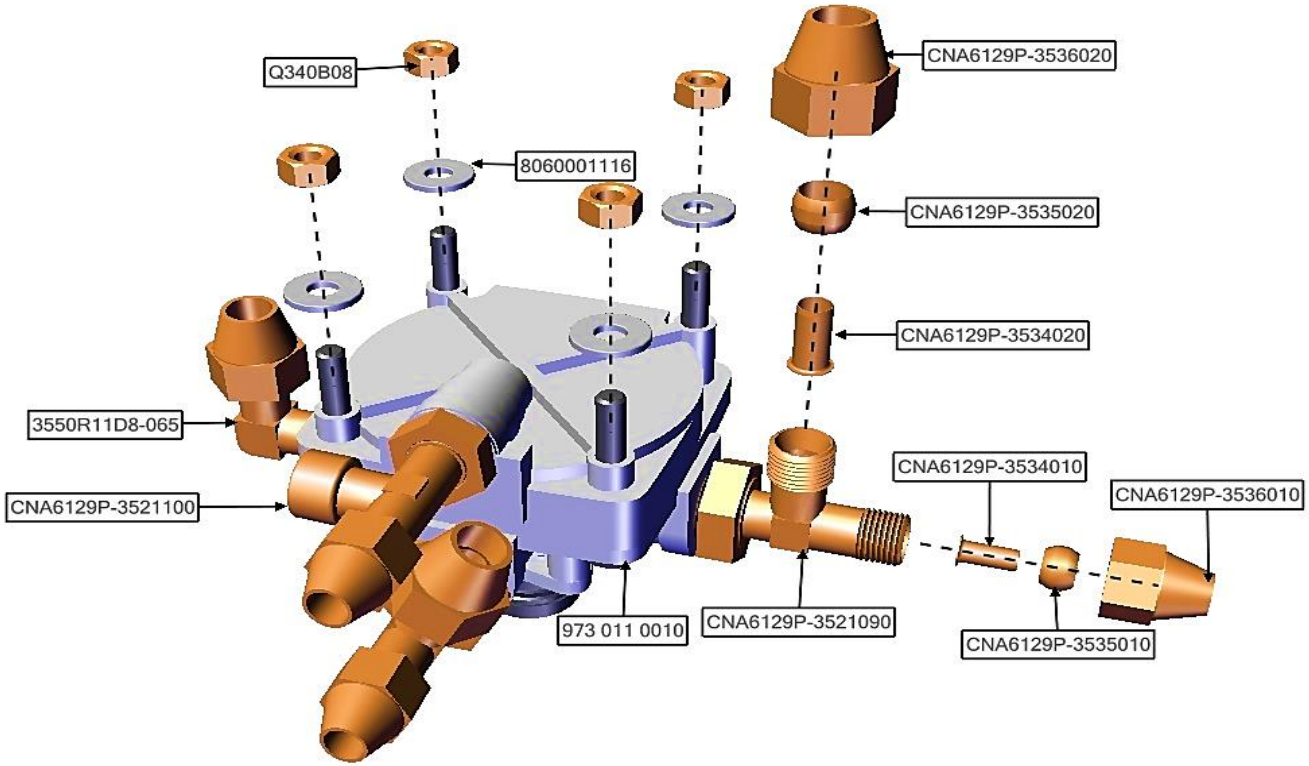

NAME_ASSB	CODE_PART NO	NAME	QTY
REAR DISTRIBUTOR VALVE - ASSY	CNA6129P-3534020	INNER CONNECTOR Ø12.7	1
	CNA6129P-3534010	INNER CONNECTOR Ø9.6	1
	CNA6129P-3535020	OUTER CONNECTOR Ø9.6	1
	CNA6129P-3535010	OUTER CONNECTOR Ø9.6	1
	CNA6129P-3536020	NUT M18	1
	CNA6129P-3536010	NUT M16	1
	CNA6129P-3536010	NUT M16	1

NAME_ASSB	CODE_PART NO	NAME	QTY
REAR DISTRIBUTOR VALVE - ASSY	Q340B08	NUT 08125	4
	8060001116	WASHER Ø08	4
	973 011 0010	QUICK RELEASE VALVE	1
	3550R11D8-065	CONNECTOR M22-M18	1
	CNA6129P-3521090	CONNECTOR M22-M18-M16	2
	CNA6129P-3521100	CONNECTOR M16-M16-Z1/4	1

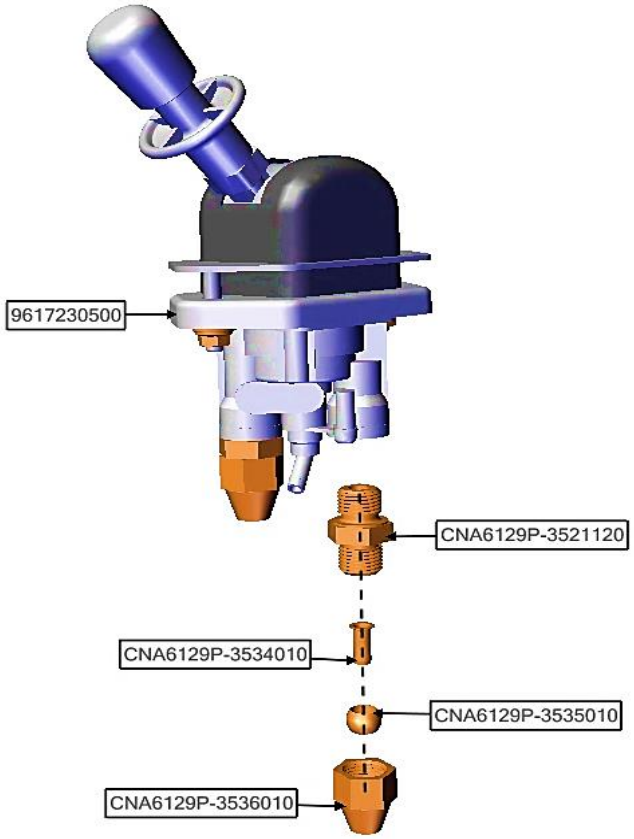

NAME_ASSB	CODE_PART NO	NAME	QTY
VALVE PARKING BRAKE	CNA6129P-3534010	INNER CONNECTOR Ø9.6	1
	CNA6129P-3535010	OUTER CONNECTOR Ø9.6	1
	CNA6129P-3536010	NUT M16	1
	CNA6129P-3521120	CONNECTOR M16-M16	1
	9617230500	PARKING BRAKE SHAFT	1

NAME_ASSB	CODE_PART NO	NAME	QTY
VALVE PARKING BRAKE			

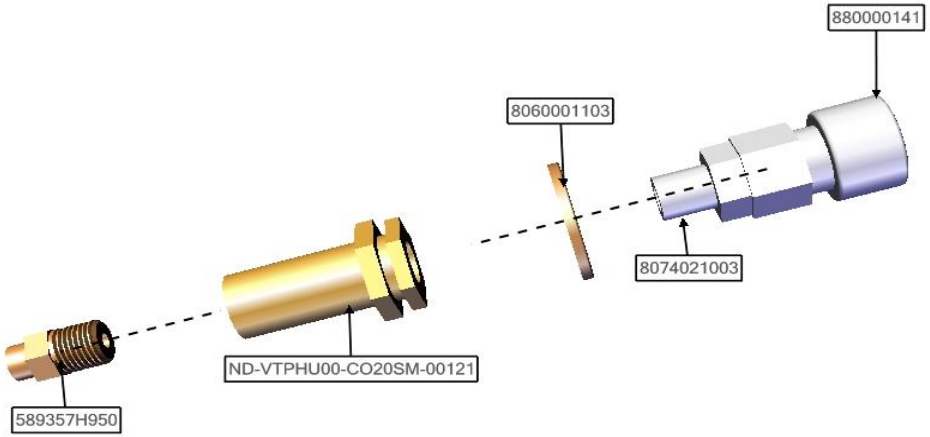

NAME_ASSB	CODE_PART NO	NAME	QTY
SPRAYING VALVE - ASSY	ND-VTPHU00-CO20SM-00121	CLIP	1
	8060001103	WASHER Ø20	1
	589357H950	CONNECTOR	1
	880000141	QUICK CONNECTOR	1
	8074021003	20SM	1

NAME_ASSB	CODE_PART NO	NAME	QTY
SPRAYING VALVE - ASSY			

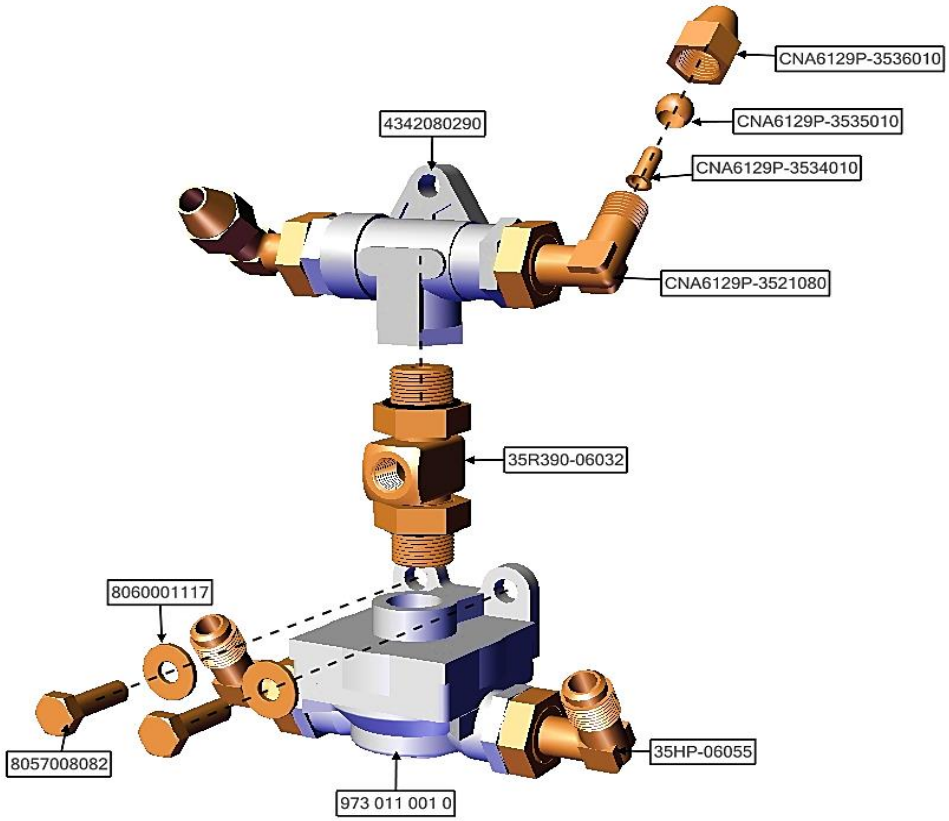

NAME_ASSB	CODE_PART NO	NAME	QTY
DISTRIBUTOR VALVE - ASSY	CNA6129P-3534010	INNER CONNECTOR Ø9.6	1
	CNA6129P-3535010	OUTER CONNECTOR Ø9.6	1
	CNA6129P-3536010	NUT M16	1
	8060001117	WASHER Ø08	2
	973 011 001 0	DRAIN VALVE	1
	4342080290	JUCTION VALVE	1
	35HP-06055	CONNECTOR M22-M18	2

NAME_ASSB	CODE_PART NO	NAME	QTY
DISTRIBUTOR VALVE - ASSY	CNA6129P-3521080	CONNECTOR M22-M16	2
	35R390-06032	CONNECTOR M22-M22-Z1/8	1
	8057008082	BOLT 08025125	2

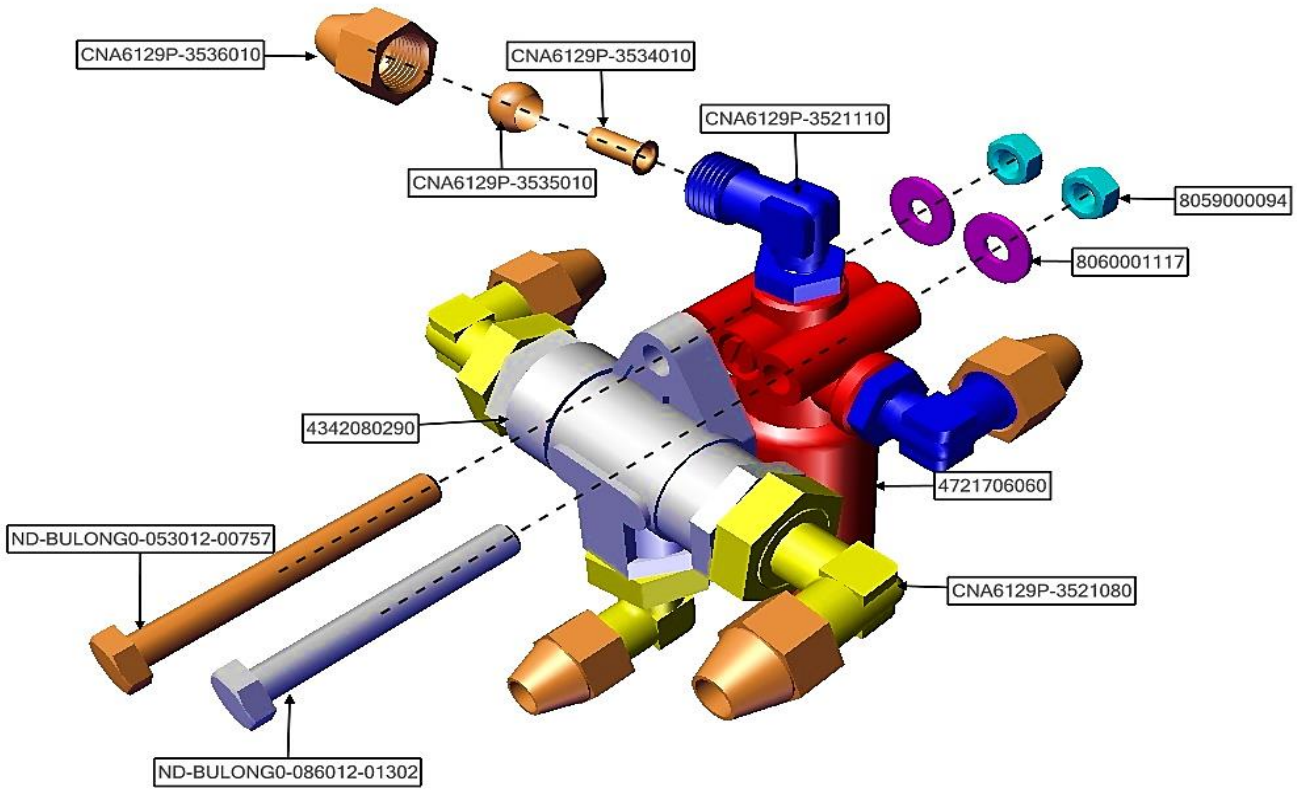

NAME_ASSB	CODE_PART NO	NAME	QTY
ASR VAVLE - ASSY	CNA6129P-3534010	INNER CONNECTOR Ø9.6	1
	CNA6129P-3535010	OUTER CONNECTOR Ø9.6	1
	CNA6129P-3536010	NUT M16	1
	8059000094	NUT 08125	2
	8060001117	WASHER Ø08	2
	4721706060	ASR VALVE	1
	4342080290	JUCTION VALVE	1

NAME_ASSB	CODE_PART NO	NAME	QTY
ASR VAVLE - ASSY	CNA6129P-3521080	CONNECTOR M22-M16	3
	CNA6129P-3521110	CONNECTOR M16-M12	2
	ND-BULONG0-053012-00757	BOLT 08070125	1
	ND-BULONG0-086012-01302	BOLT 08060125	1

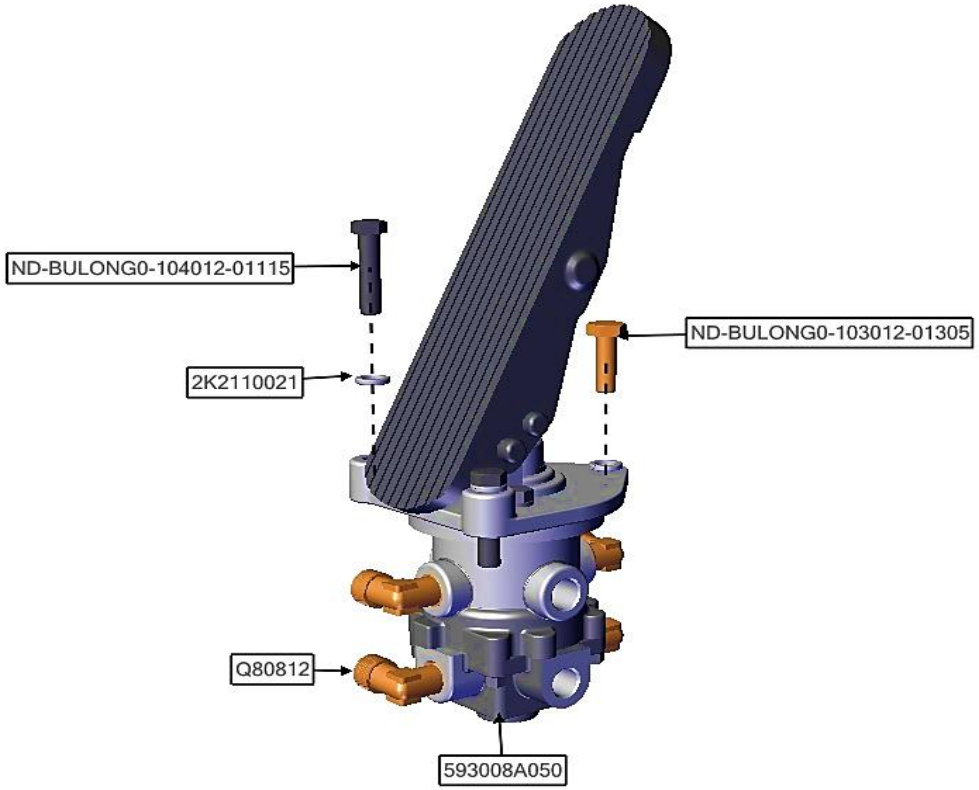

NAME_ASSB	CODE_PART NO	NAME	QTY
BRAKE VALVE ASSY	2K2110021	SPLIT WASHER Ø10	3
	Q80812	CONNECTOR M18-Z3/8	4
	593008A050	BRAKE VALVE	1
	ND-BULONG0-104012-01115	BOLT 10040125	2
	ND-BULONG0-103012-01305	BOLT 10030125	1

NAME_ASSB	CODE_PART NO	NAME	QTY
BRAKE VALVE ASSY			

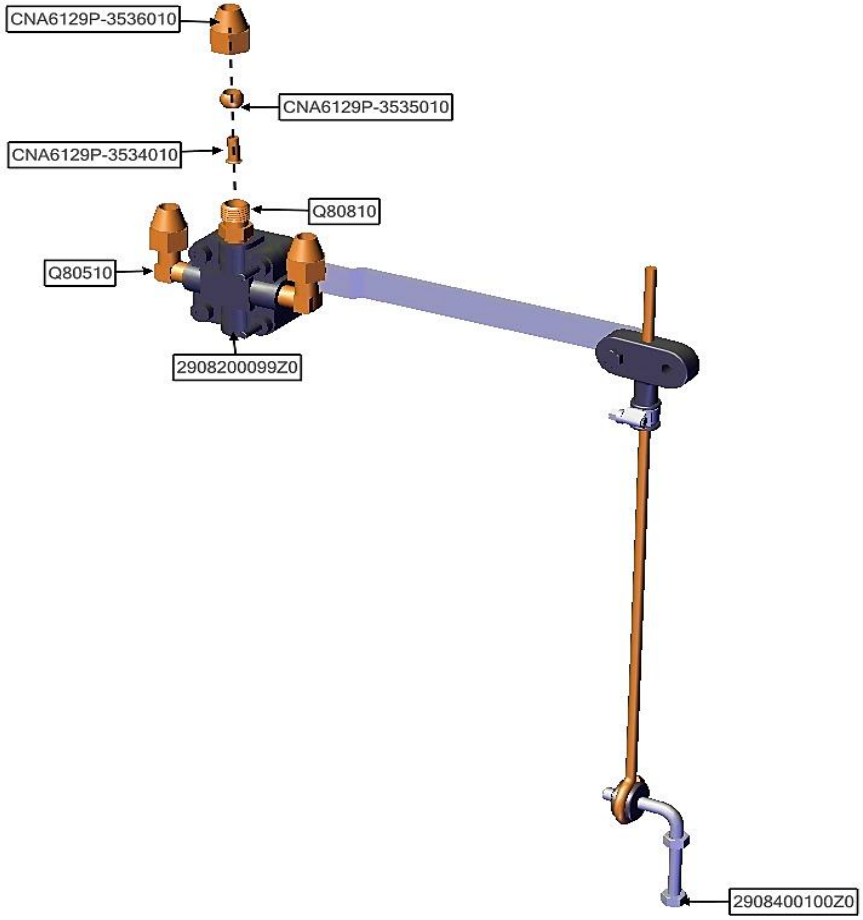

NAME_ASSB	CODE_PART NO	NAME	QTY
AIR SUSPENSION LEVELING VALVE - ASSY	CNA6129P-3534010	INNER CONNECTOR Ø9.6	1
	CNA6129P-3535010	OUTER CONNECTOR Ø9.6	1
	CNA6129P-3536010	NUT M16	1
	2908200099Z0	AIR SUSPENSION LEVELING VALVE	1
	Q80510	CONNECTOR M16-Z1/4	1
	Q80810	CONNECTOR M16-Z1/4	2
	2908400100Z0	AIR SUSPENSION LEVELING VALVE SHAFT	1

NAME_ASSB	CODE_PART NO	NAME	QTY
AIR SUSPENSION LEVELING VALVE - ASSY			

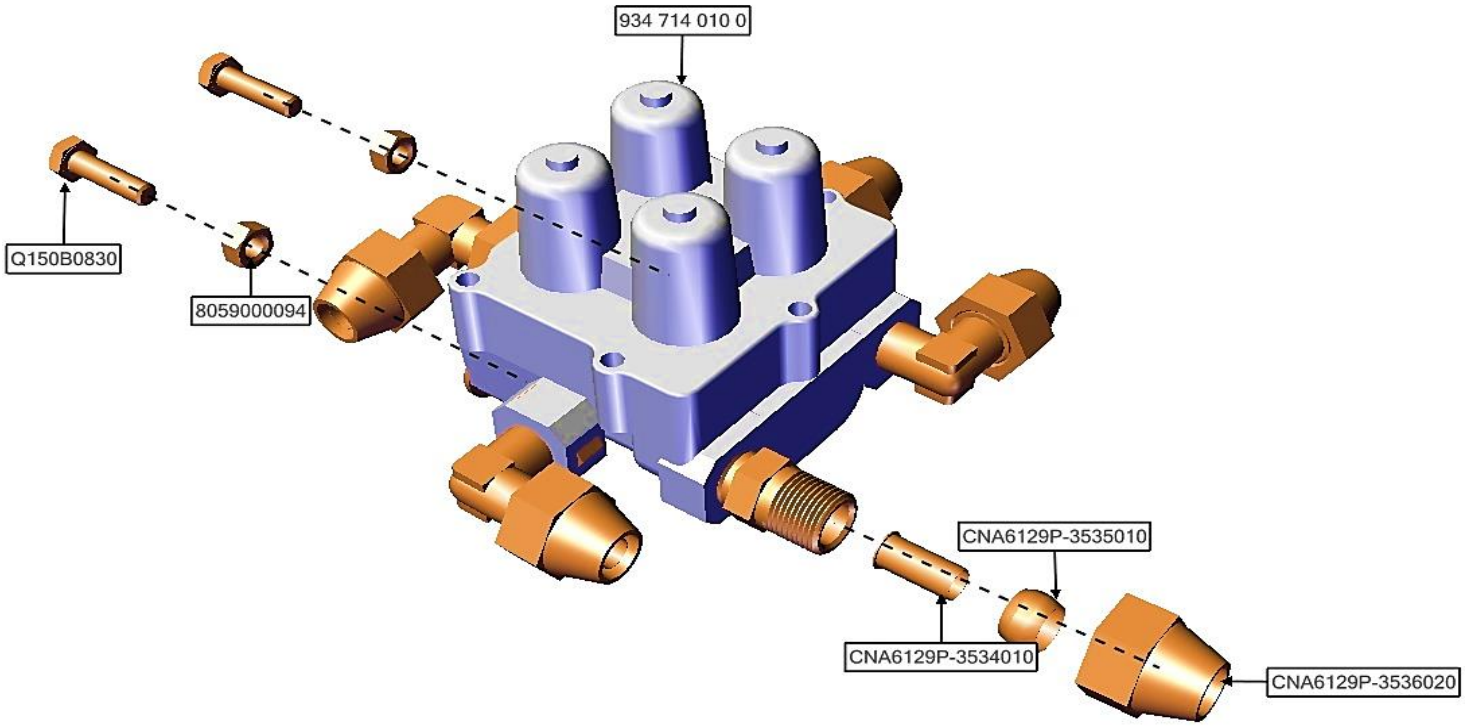

NAME_ASSB	CODE_PART NO	NAME	QTY
TOTAL CHECK VALVE - ASSY	CNA6129P-3534010	INNER CONNECTOR Ø12.7	5
	CNA6129P-3535010	OUTER CONNECTOR Ø9.6	5
	CNA6129P-3536020	NUT M18	5
	8059000094	NUT 08125	2
	934 714 010 0	TOTAL CHECK VALVE	1
	Q150B0830	BOLT 08030125	2

NAME_ASSB	CODE_PART NO	NAME	QTY
TOTAL CHECK VALVE - ASSY			

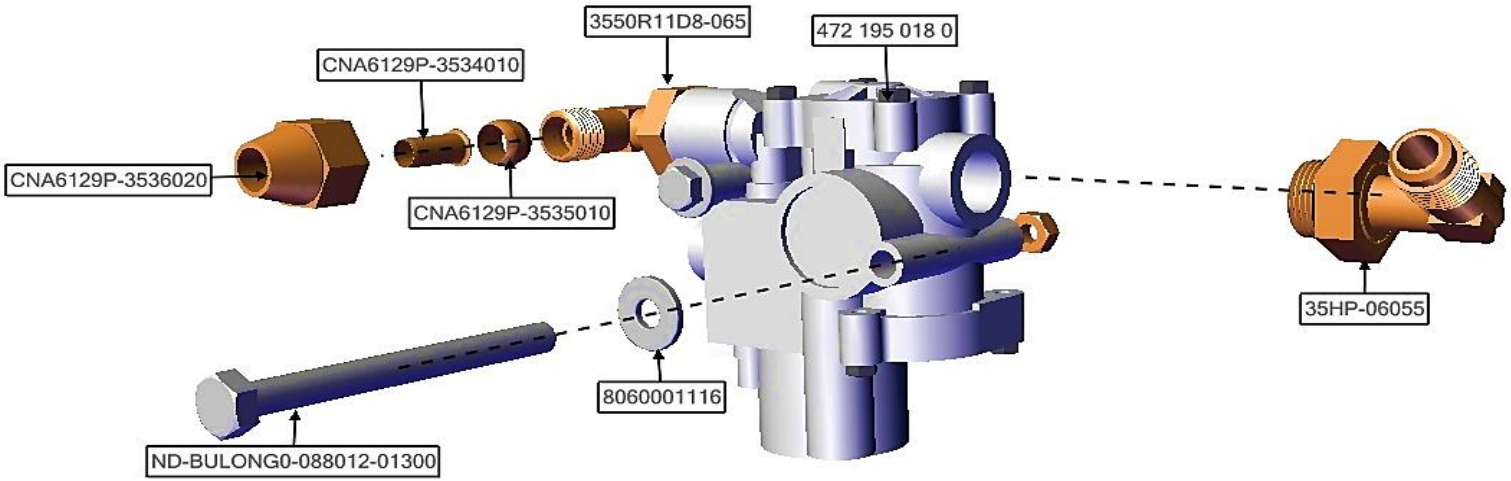

NAME_ASSB	CODE_PART NO	NAME	QTY
ABS VALVE - ASSY	CNA6129P-3534010	INNER CONNECTOR Ø12.7	1
	CNA6129P-3535010	OUTER CONNECTOR Ø9.6	1
	CNA6129P-3536020	NUT M18	1
	8060001116	WASHER Ø08	2
	472 195 018 0	ABS VALVE	1
	35HP-06055	CONNECTOR M22-M18	1
	3550R11D8-065	CONNECTOR M22-M18	1

NAME_ASSB	CODE_PART NO	NAME	QTY
ABS VALVE - ASSY	ND-BULONG0-088012-01300	BOLT 08080125	1

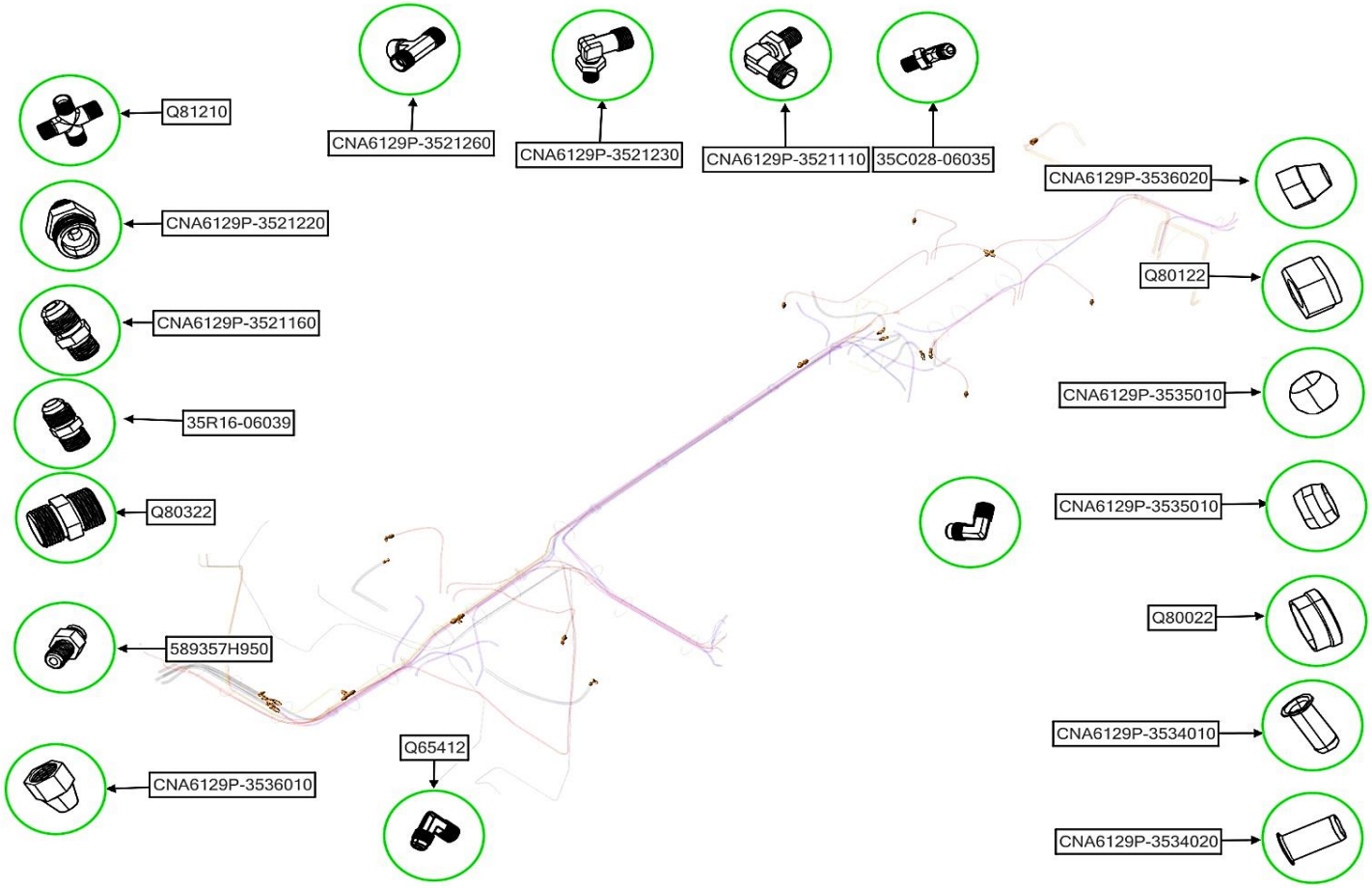

NAME_ASSB	CODE_PART NO	NAME	QTY
CONNECTOR SYSTEM	CNA6129P-3535010	OUTER CONNECTOR Ø9.6	16
	CNA6129P-3534020	INNER CONNECTOR Ø12.7	6
	CNA6129P-3534010	INNER CONNECTOR Ø9.6	16
	CNA6129P-3536010	NUT M16	16
	CNA6129P-3535010	OUTER CONNECTOR Ø9.6	6
	CNA6129P-3521260	CONNECTOR3 M18-M18-Z1/4	2
	CNA6129P-3521230	CONNECTOR M16-M10	2

NAME_ASSB	CODE_PART NO	NAME	QTY
CONNECTOR SYSTEM	CNA6129P-3521220	CONNECTOR M16-M10	4
	CNA6129P-3521160	CONNECTOR M18-M16	2
	35R16-06039	CONNECTOR M18-M18	2
	35C028-06035	CONNECTOR M18-M16	4
	Q81210	CONNECTOR M16	1
	Q80322	CONNECTOR M30-M30	1
	Q65412	CONNECTOR M18-Z3/8	2

NAME_ASSB	CODE_PART NO	NAME	QTY
CONNECTOR SYSTEM	CNA6129P-3536020	NUT M18	6
	Q80022	OUTER CONNECTOR Ø22	1
	Q80122	NUT M30	1
	589357H950	CONNECTOR	1
	CNA6129P-3521110	CONNECTOR M16-M12	1

NAME_ASSB	CODE_PART NO	NAME	QTY
CONNECTOR SYSTEM			

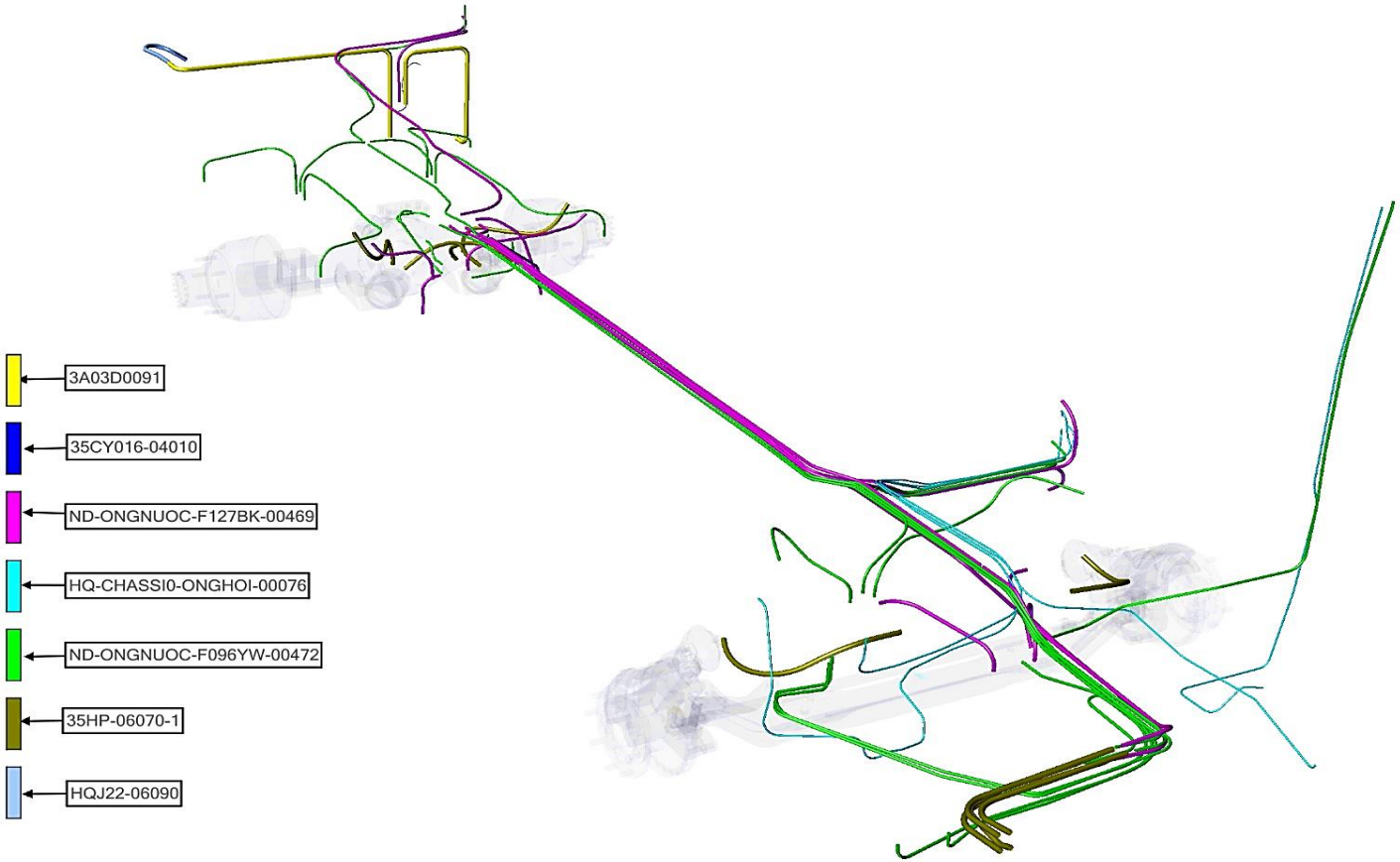

NAME_ASSB	CODE_PART NO	NAME	QTY
AIR PIPING	3A03D0091	COPPER PIPE Ø22	1
	35CY016-04010	PIPE	1
	35HP-06070-1	SPRING HYDRAULIC PIPE	1
	HQ-CHASSI0-ONGHOI-00076	PIPE	1
	HQJ22-06090	GRID PIPE	1
	ND-ONGNUOC-F096YW-00472	PIPE	1
	ND-ONGNUOC-F127BK-00469	PIPE	1

NAME_ASSB	CODE_PART NO	NAME	QTY
AIR PIPING			

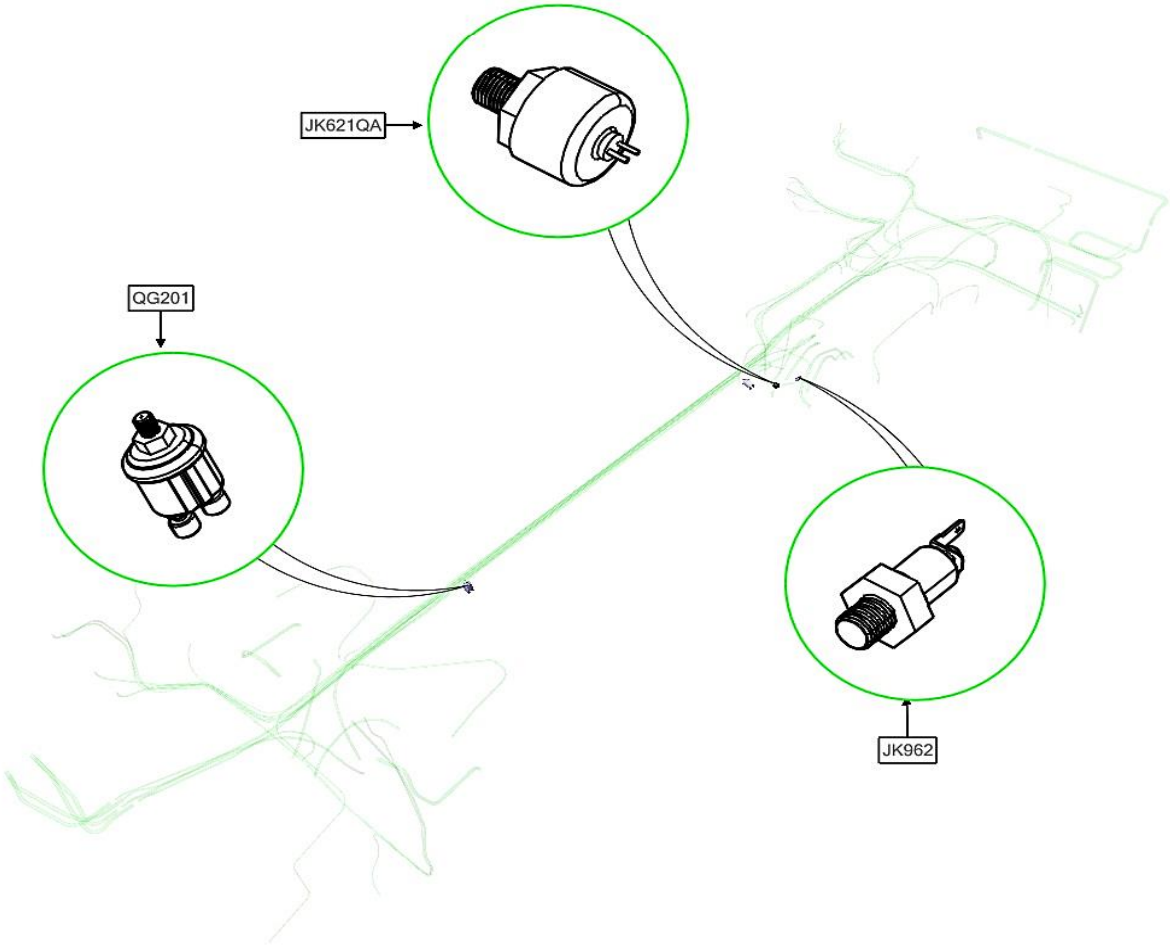

NAME_ASSB	CODE_PART NO	NAME	QTY
SENSOR	QG201	PRESSURE SENSOR	2
	JK621QA	STOP SENSOR	1
	JK962	ACTUATOR SENSOR	1

NAME_ASSB	CODE_PART NO	NAME	QTY
SENSOR			

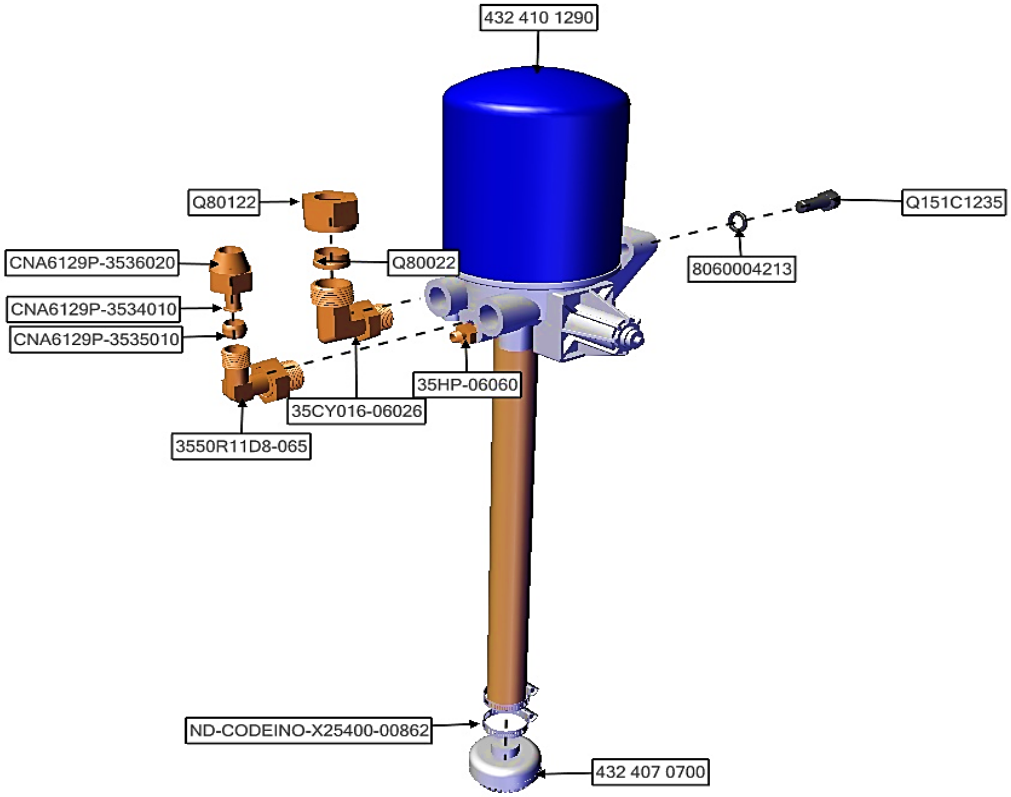

NAME_ASSB	CODE_PART NO	NAME	QTY
DRYER ASSY	ND-VTPHU00-SUVA25-00131	AIR DRYER EXHAUST PIPE	1
	8060004213	SPLIT WASHER Ø12	3
	CNA6129P-3534010	INNER CONNECTOR Ø12.7	1
	Q80022	OUTER CONNECTOR Ø22	1
	CNA6129P-3535010	OUTER CONNECTOR Ø9.6	1
	Q80122	NUT M30	1
	CNA6129P-3536020	NUT M18	1

NAME_ASSB	CODE_PART NO	NAME	QTY
DRYER ASSY	ND-CODEINO-X25400-00862	CLAMP 25-40	2
	432 407 0700	DRAIN VALVE	1
	35HP-06060	CONNECTOR M12-Z1/8	1
	35CY016-06026	CONNECTOR M30-M22	1
	3550R11D8-065	CONNECTOR M22-M18	1
	432 410 1290	AIR DRYER	1
	Q151C1235	BOLT 12035150	3

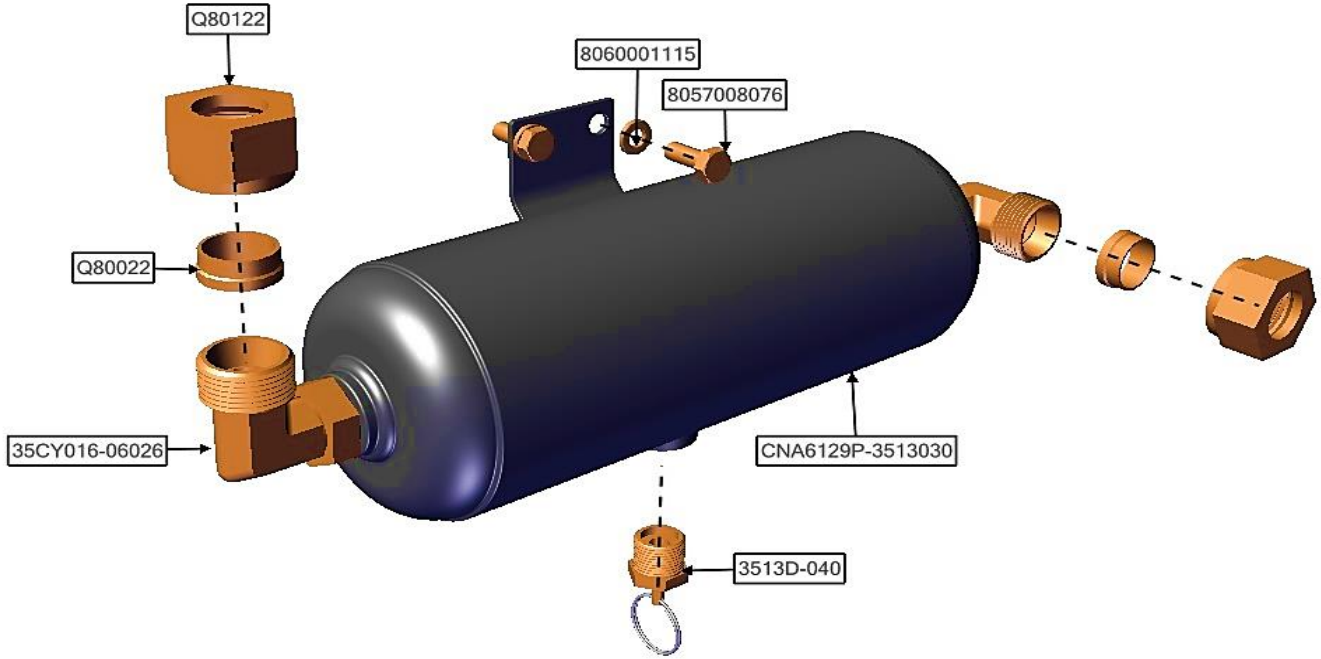

NAME_ASSB	CODE_PART NO	NAME	QTY
WATER EXHAUST TANK - ASSY	Q80022	OUTER CONNECTOR Ø22	2
	Q80122	NUT M30	2
	8060001115	WASHER Ø08	2
	3513D-040	DRAIN VALVE	1
	35CY016-06026	CONNECTOR M30-M22	2
	CNA6129P-3513030	WATER EXHAUST TANK	1
	8057008076	BOLT 08020125	2

NAME_ASSB	CODE_PART NO	NAME	QTY
WATER EXHAUST TANK - ASSY			

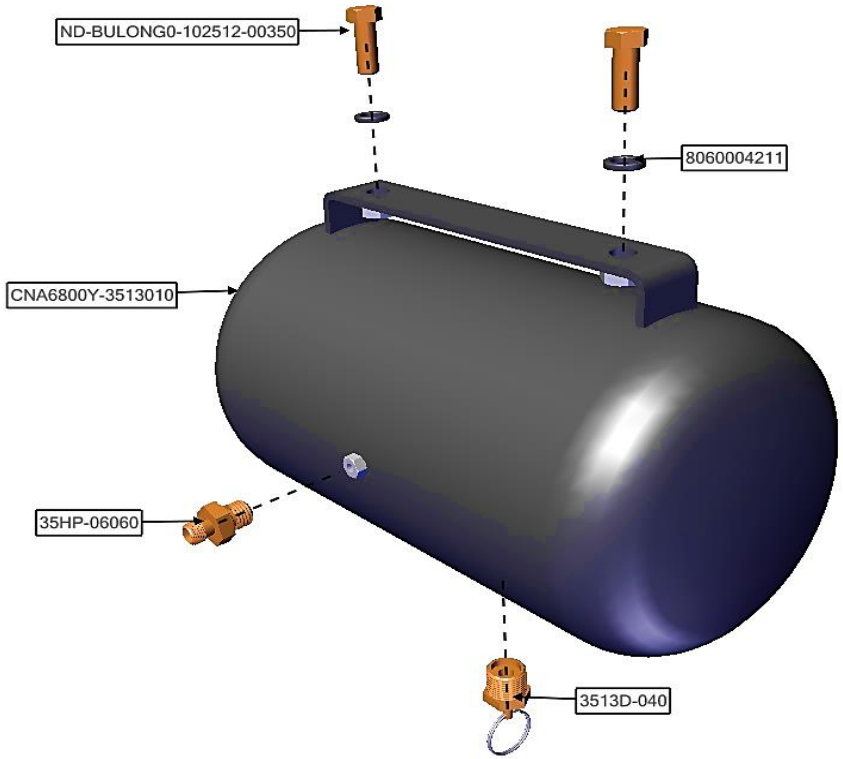

NAME_ASSB	CODE_PART NO	NAME	QTY
PURGE TANK - ASSY	8060004211	SPLIT WASHER Ø10	2
	3513D-040	DRAIN VALVE	1
	35HP-06060	CONNECTOR M12-Z1/8	1
	CNA6800Y-3513010	MUFFLER TANK	1
	ND-BULONG0-102512-00350	CONNECTOR 620046	2

NAME_ASSB	CODE_PART NO	NAME	QTY
PURGE TANK - ASSY			

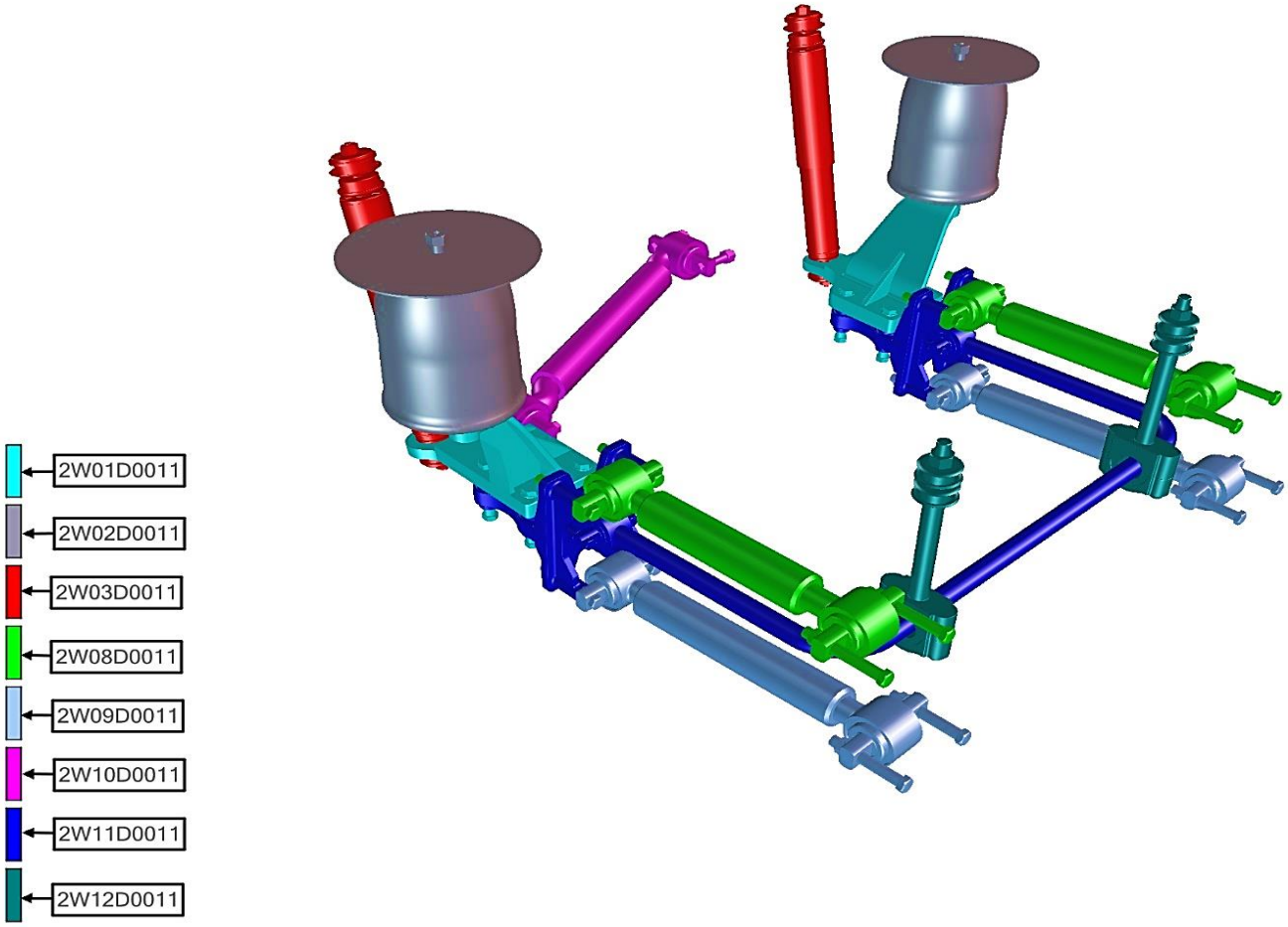

NAME_ASSB	CODE_PART NO	NAME	QTY
FRONT SUSPENSION SYSTEM	2W03D0011	FRONT SHOCK OBSORBER	2
	2W09D0011	VERTICAL BALANCE BAR ASSY 02	1
	2W08D0011	VERTICAL BALANCE BAR ASSY 01	1
	2W01D0011	AIR BAG MOUNTING - ASSY	1
	2W02D0011	FRONT AIRBAG ASSY	1
	2W12D0011	FRONT BALANCE BAR - ASSY	1
	2W11D0011	FRONT BALANCE BAR ASSY	1

NAME_ASSB	CODE_PART NO	NAME	QTY
FRONT SUSPENSION SYSTEM	2W10D0011	HORIZONTAL BALANCE BAR - ASSY	1

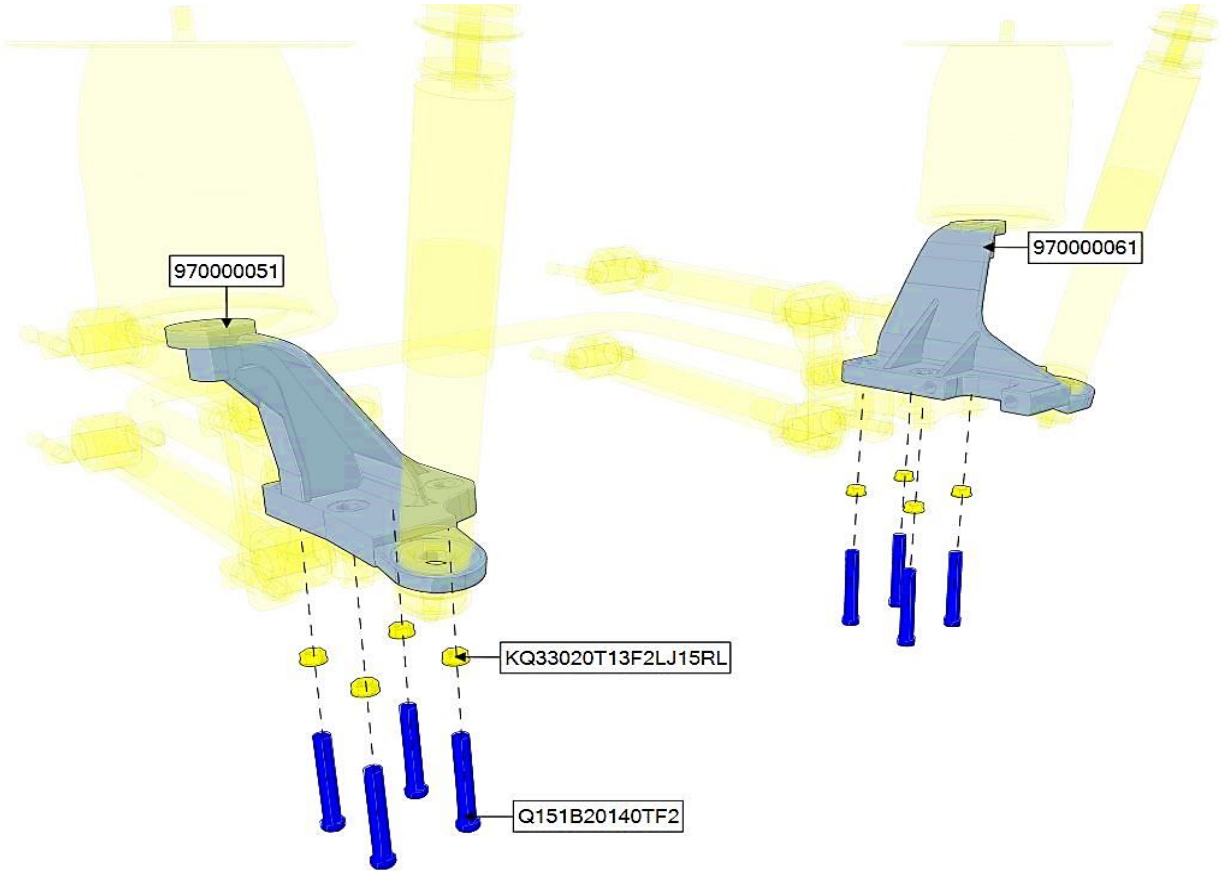

NAME_ASSB	CODE_PART NO	NAME	QTY
AIR BAG MOUNTING - ASSY	KQ33020T13F2LJ15RL	NUT 20150	8
	Q151B20140TF2	BOLT 20140150	8
	970000051	MOUNTING	1
	970000061	MOUNTING	1

NAME_ASSB	CODE_PART NO	NAME	QTY
AIR BAG MOUNTING - ASSY			

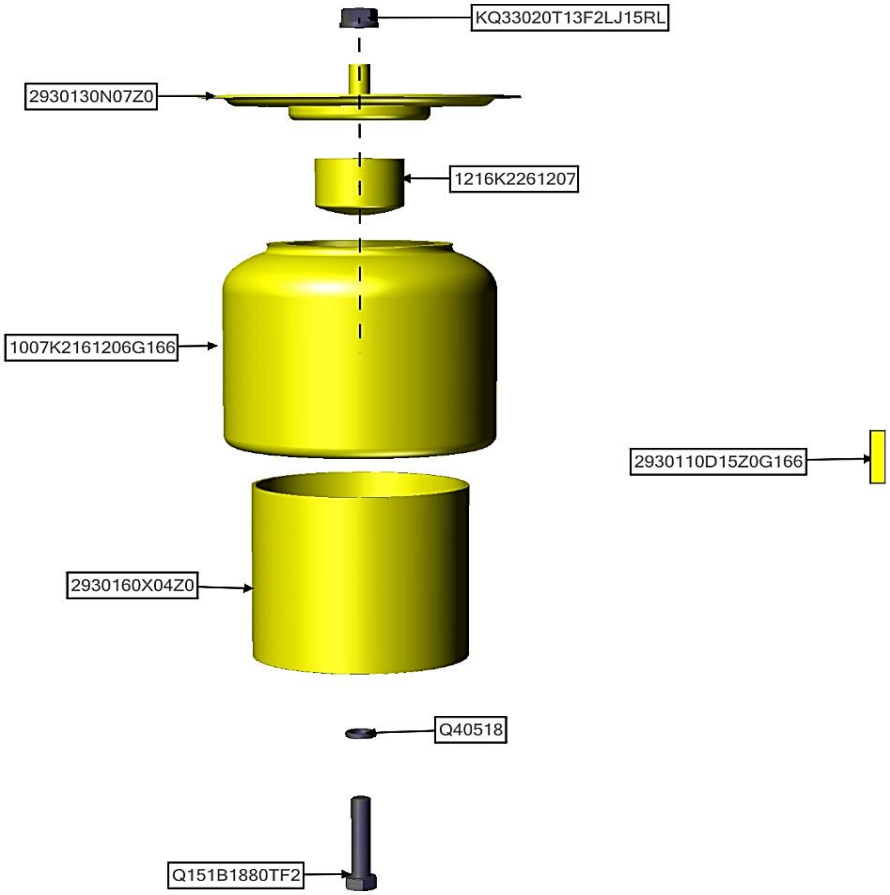

NAME_ASSB	CODE_PART NO	NAME	QTY
FRONT AIRBAG ASSY	Q40518	SPLIT WASHER Ø18	1
	Q151B1880TF2	BOLT 18080150	1
	KQ33020T13F2LJ15RL	NUT 18150	1
	2930160X04Z0	MOUNTING	1
	2930130N07Z0	MOUNTING	1
	2930110D15Z0G166	FRONT AIR BAG	1

NAME_ASSB	CODE_PART NO	NAME	QTY
FRONT AIRBAG ASSY	1216K2261207	MOUNTING	1
	1007K2161206G166	AIR BAG RUBBER	1

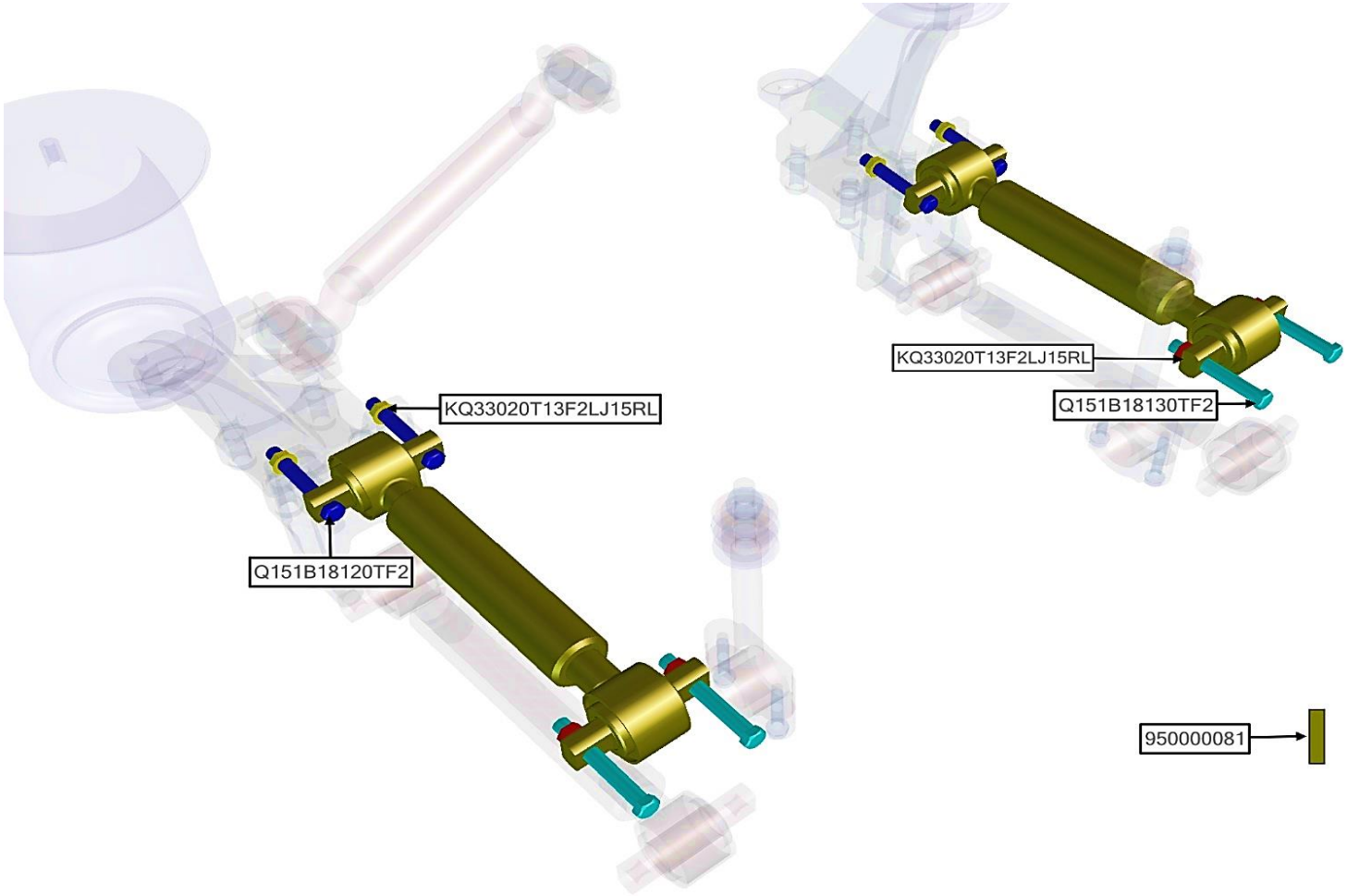

NAME_ASSB	CODE_PART NO	NAME	QTY
VERTICAL BALANCE BAR ASSY 01	KQ33020T13F2LJ15RL	NUT 18150	8
	Q151B18130TF2	BOLT M18X130	4
	Q151B18120TF2	BOLT M18X120	4
	950000081	VERTICAL BALANCE BAR	2
	KQ33020T13F2LJ15RL	NUT 18150	8

NAME_ASSB	CODE_PART NO	NAME	QTY
VERTICAL BALANCE BAR ASSY 01			

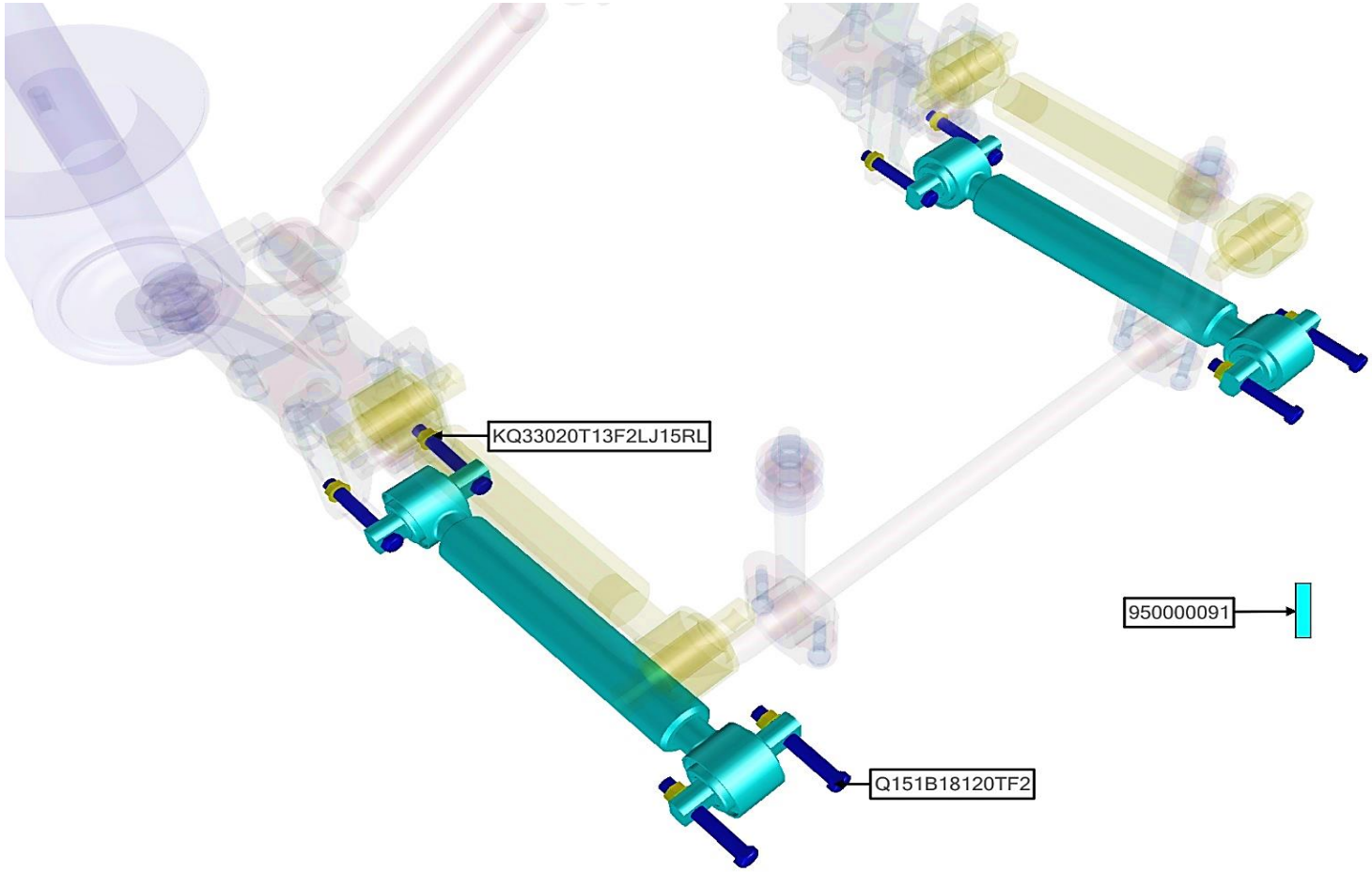

NAME_ASSB	CODE_PART NO	NAME	QTY
VERTICAL BALANCE BAR ASSY 02	KQ33020T13F2LJ15RL	NUT 18150	8
	Q151B18120TF2	BOLT M18X120	8
	950000091	VERTICAL BALANCE BAR	2

NAME_ASSB	CODE_PART NO	NAME	QTY
VERTICAL BALANCE BAR ASSY 02			

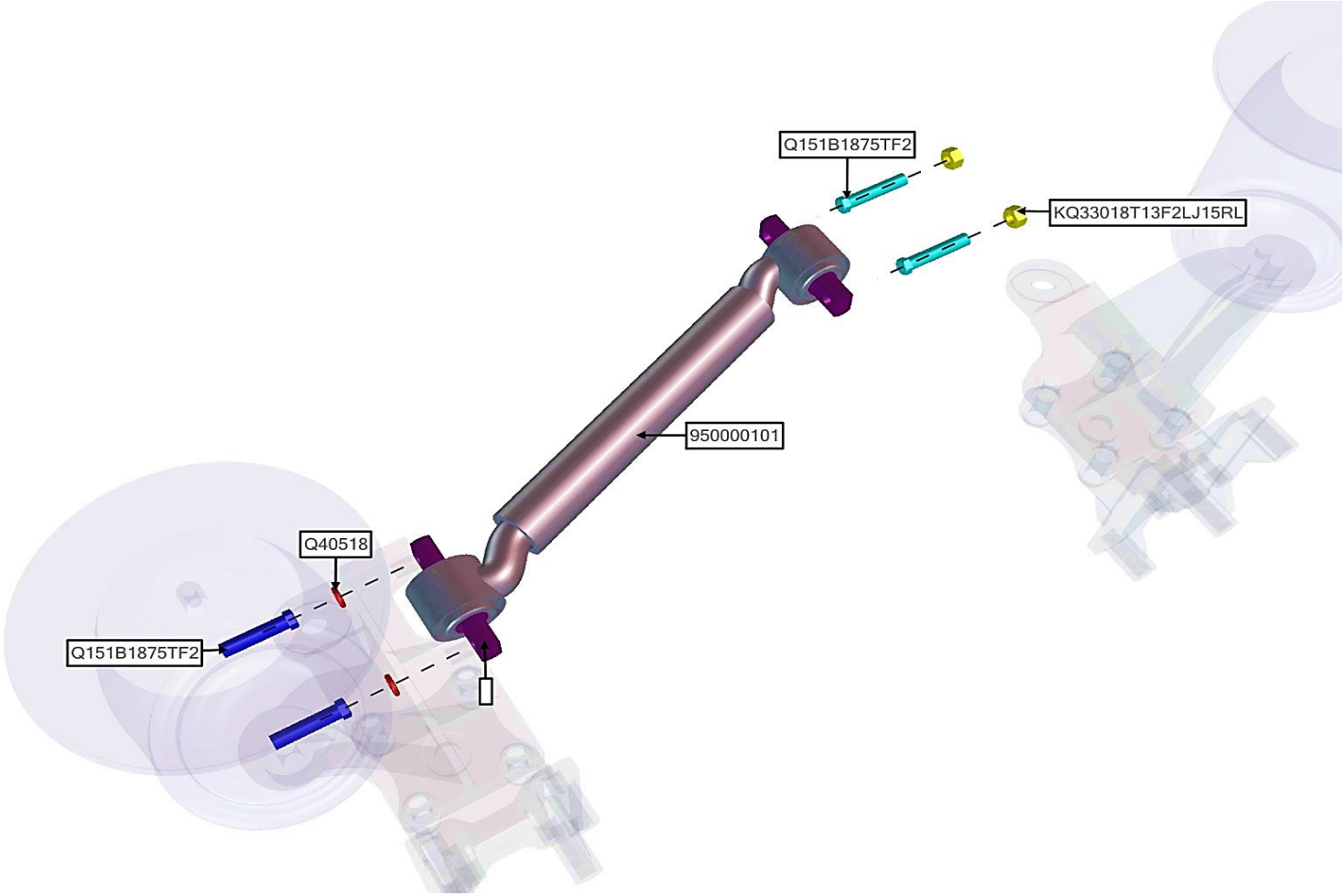

NAME_ASSB	CODE_PART NO	NAME	QTY
HORIZONTAL BALANCE BAR - ASSY	Q40518	SPLIT WASHER Ø18	2
	KQ33018T13F2LJ15RL	NUT M18	2
	Q151B1875TF2	BOLT 18090150	2
	Q151B1875TF2	BOLT 18075150	2
	950000101	HORIZONTAL BALANCE BAR	1

NAME_ASSB	CODE_PART NO	NAME	QTY
HORIZONTAL BALANCE BAR - ASSY			

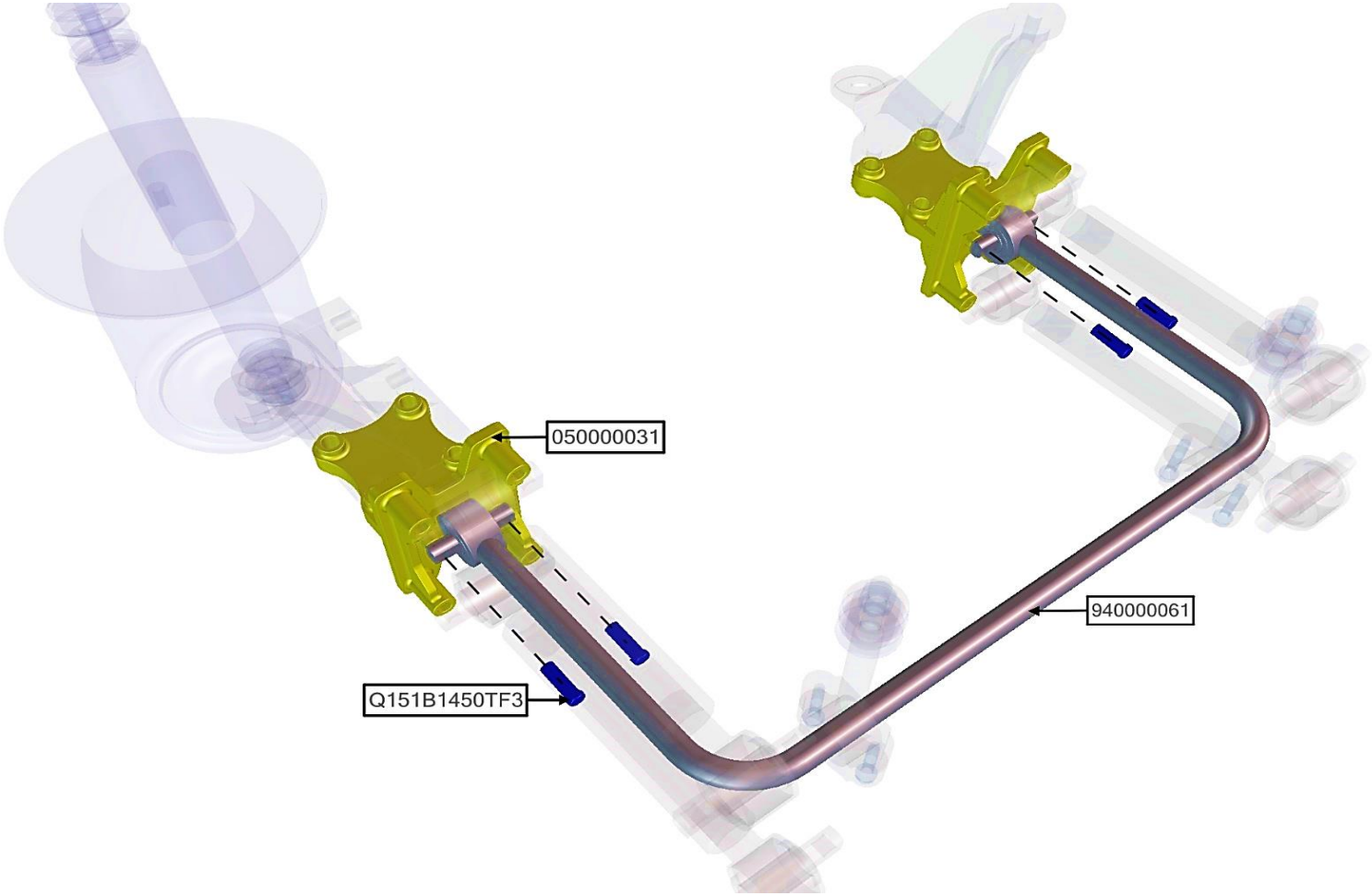

NAME_ASSB	CODE_PART NO	NAME	QTY
FRONT BALANCE BAR ASSY	Q151B1450TF3	BOLT B14X50	4
	050000031	BRACKET	2
	940000061	FRONT BALANCE BAR	1

NAME_ASSB	CODE_PART NO	NAME	QTY
FRONT BALANCE BAR ASSY			

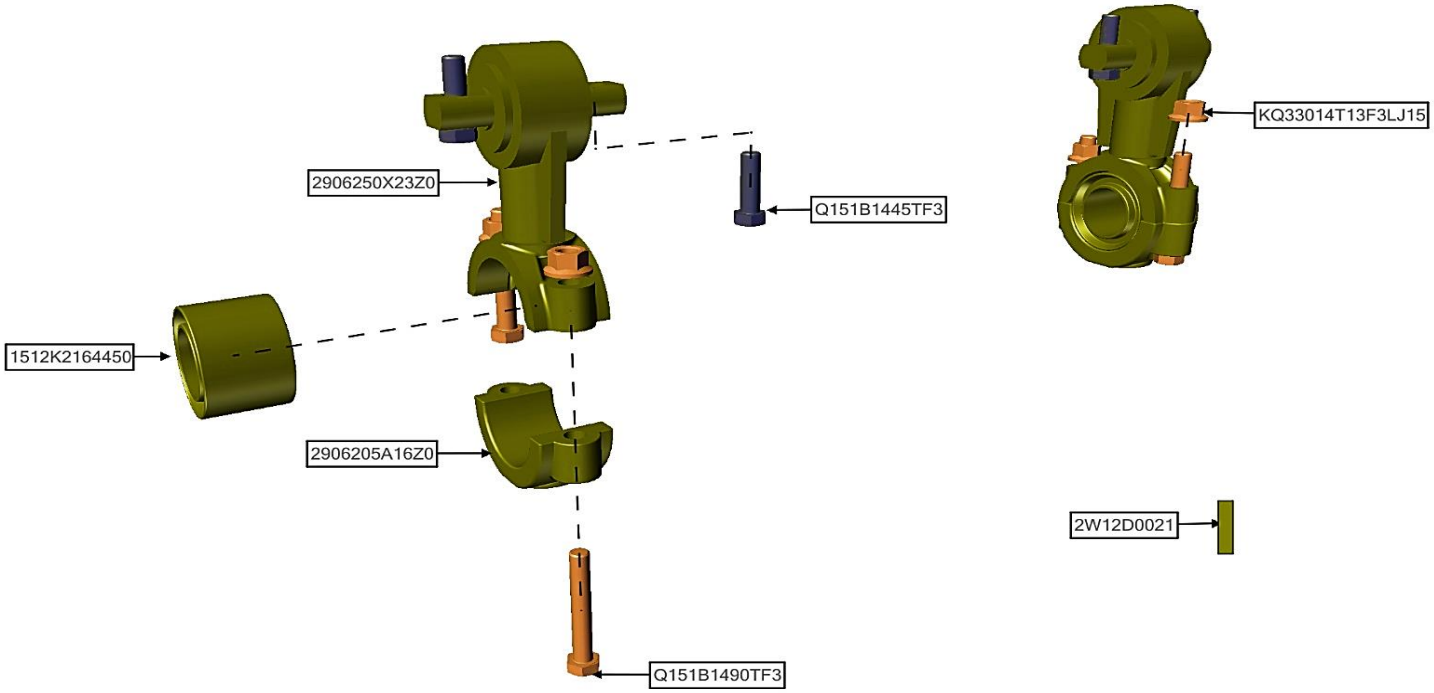

NAME_ASSB	CODE_PART NO	NAME	QTY
FRONT BALANCE BAR - ASSY	Q151B1490TF3	BOLT 14090150	4
	Q151B1445TF3	BOLT 14045150	4
	KQ33014T13F3LJ15	NUT 14150	4
	2906250X23Z0	FRONT BALANCE BAR	2
	2906205A16Z0	MOUNTING	2
	1512K2164450	RUBBER 01	2
	2W12D0021	FRONT BALANCE BAR ASSY	2

NAME_ASSB	CODE_PART NO	NAME	QTY
FRONT BALANCE BAR - ASSY			

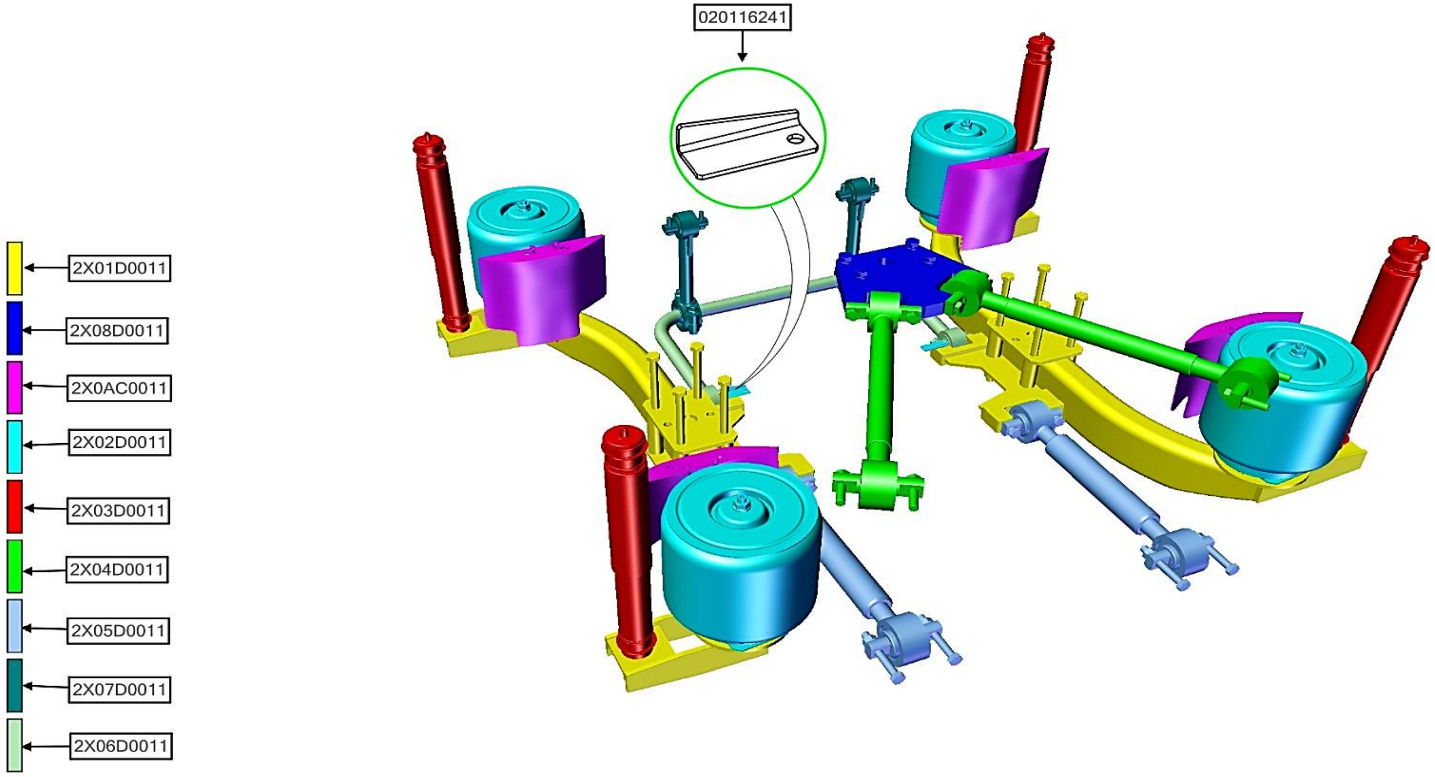

NAME_ASSB	CODE_PART NO	NAME	QTY
REAR SUSPENSION SYSTEM	020116241	BRACKET	2
	2X0AC0011	COVER - ASSY	1
	2X08D0011	VERTICAL BALANCE BAR MOUNTING - ASS	1
	2X07D0011	REAR BALANCE BAR AS	1
	2X06D0011	REAR BALANCE BAR - ASSY	1
	2X05D0011	VERTICAL BALANCE BAR - ASSY 02	1
	2X04D0011	VERTICAL BALANCE BAR - ASSY 01	1

NAME_ASSB	CODE_PART NO	NAME	QTY
REAR SUSPENSION SYSTEM	2X03D0011	REAR SHOCK OBSORBER - ASSY	1
	2X02D0011	REAR AIRBAG ASSY	1
	2X01D0011	REAR AXLE MOUNTING - ASSY	1

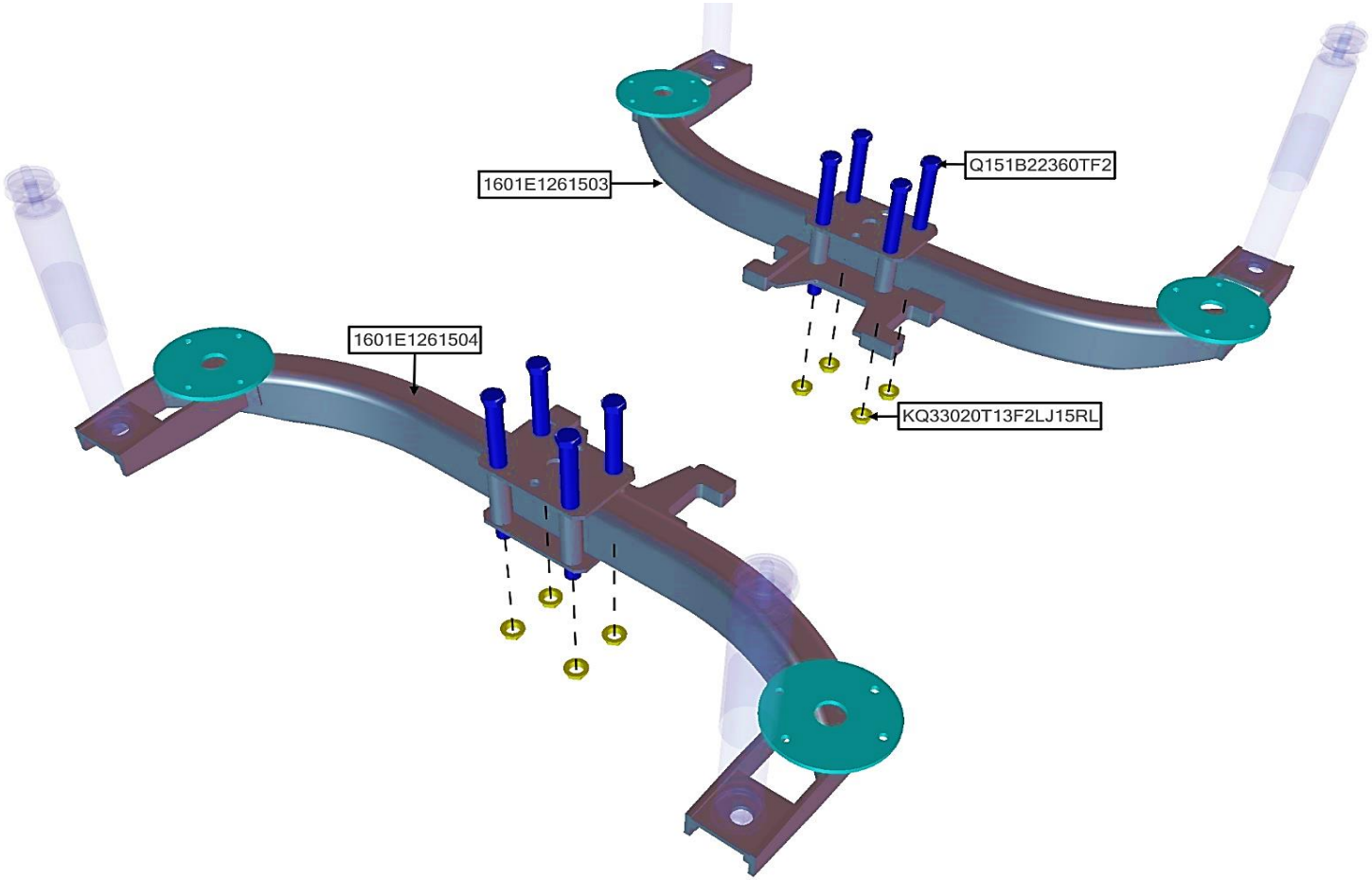

NAME_ASSB	CODE_PART NO	NAME	QTY
REAR AXLE MOUNTING - ASSY	KQ33020T13F2LJ15RL	NUT 20150	8
	Q151B22360TF2	BOLT 20360150	8
	1601E1261503	SUPPORT	1
	1601E1261504	SUPPORT	1

NAME_ASSB	CODE_PART NO	NAME	QTY
REAR AXLE MOUNTING - ASSY			

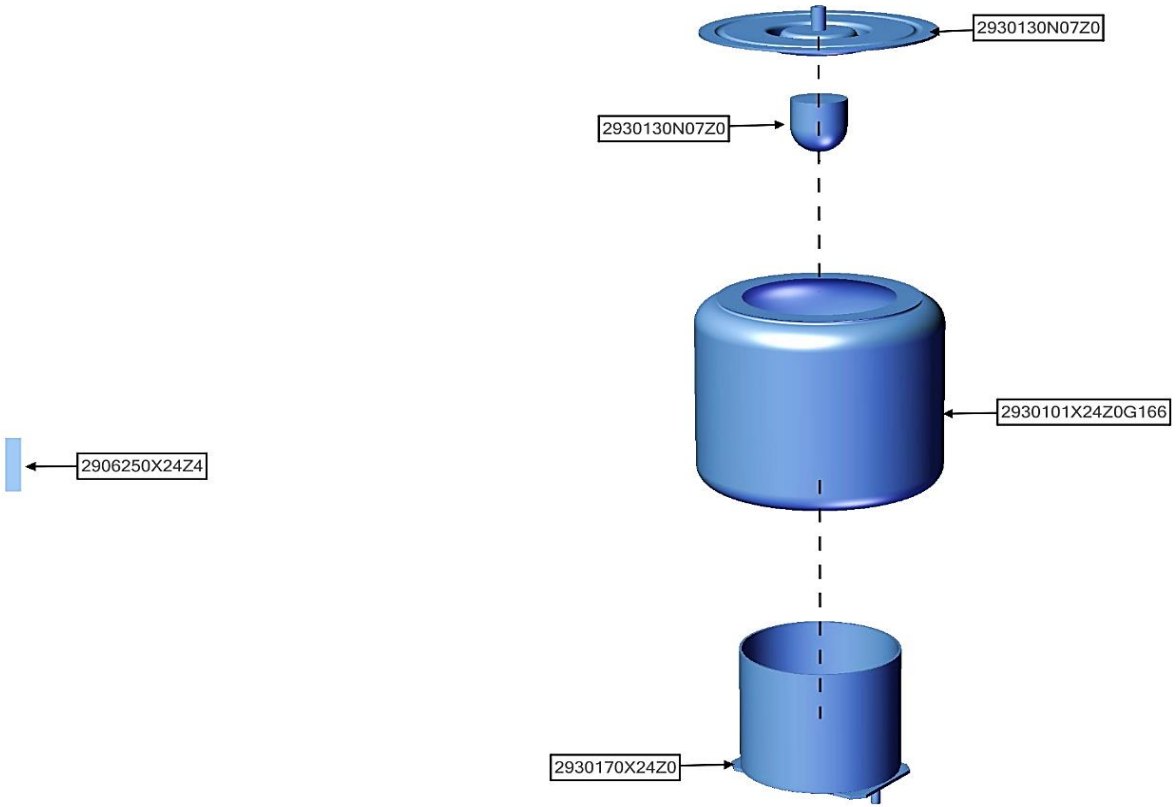

NAME_ASSB	CODE_PART NO	NAME	QTY
REAR AIRBAG ASSY	2930170X24Z0	MOUNTING	1
	2930130N07Z0	MOUNTING	1
	2930130N07Z0	MOUNTING	1
	2930101X24Z0G166	AIR BAG RUBBER	1
	2906250X24Z4	REAR AIRBAG - ASSY	1

NAME_ASSB	CODE_PART NO	NAME	QTY
REAR AIRBAG ASSY			

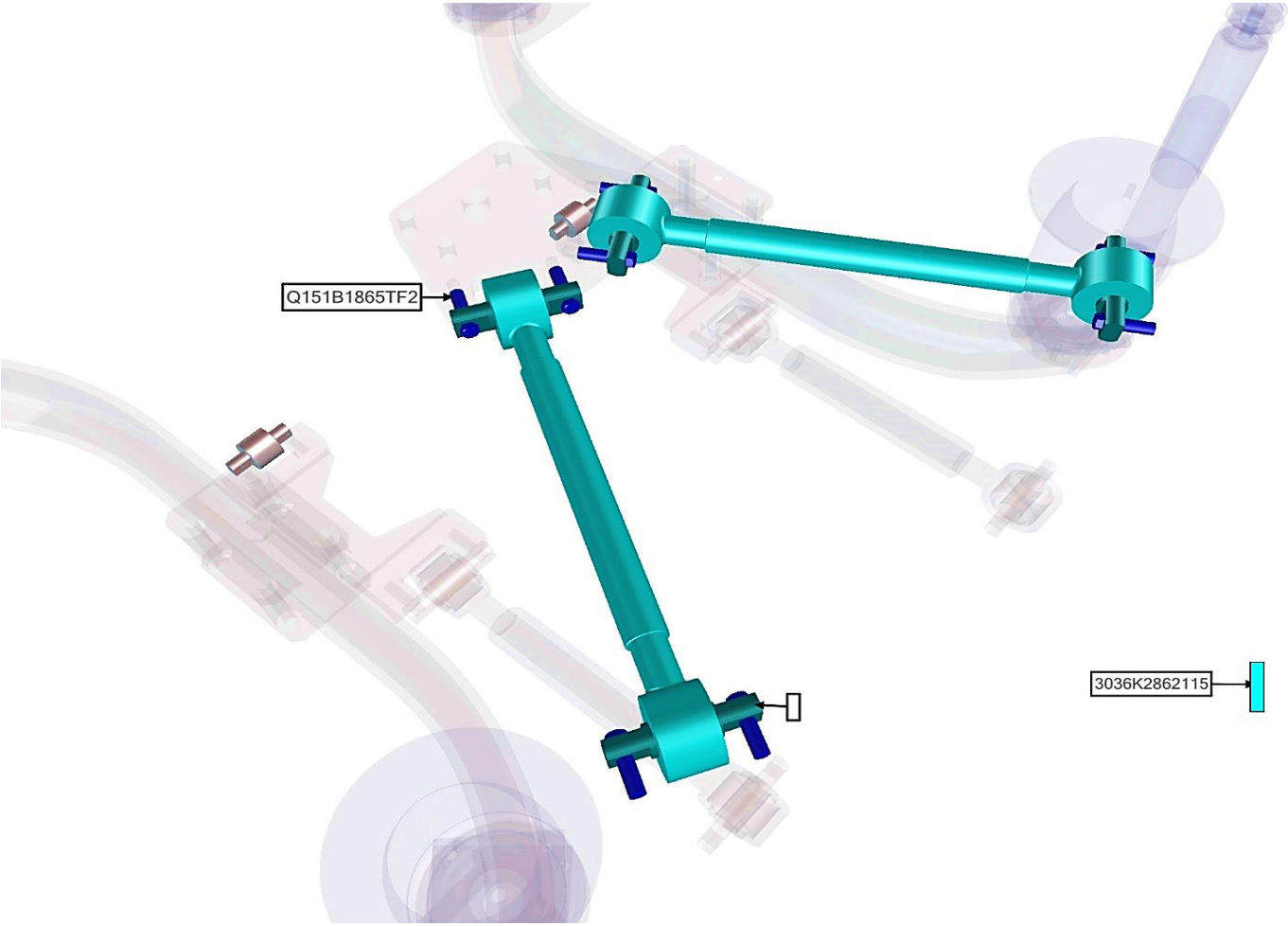

NAME_ASSB	CODE_PART NO	NAME	QTY
VERTICAL BALANCE BAR - ASSY 01	Q151B1865TF2	BOLT 18065150	8
	3036K2862115	BALANCE BAR	2

NAME_ASSB	CODE_PART NO	NAME	QTY
VERTICAL BALANCE BAR - ASSY 01			

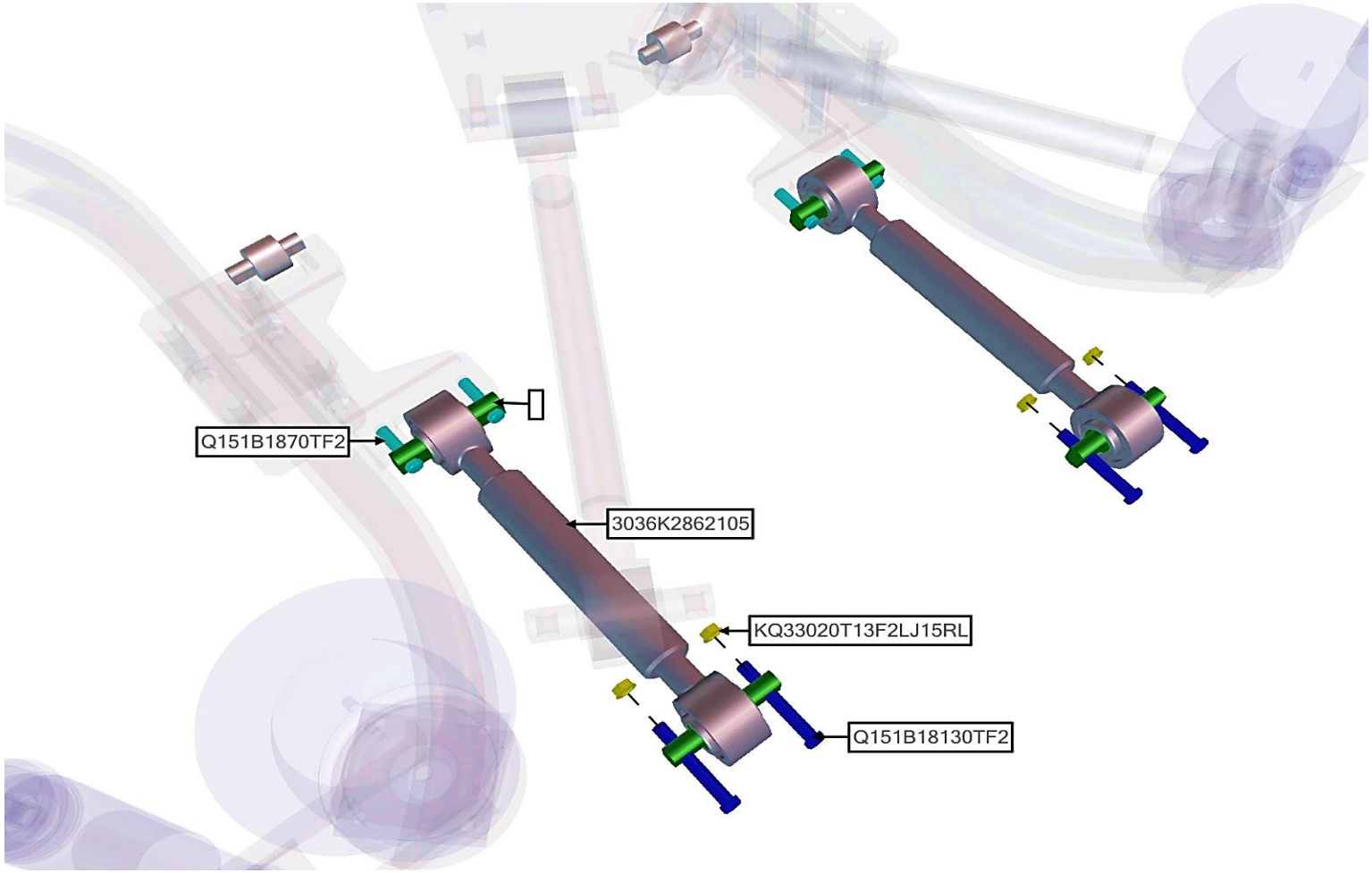

NAME_ASSB	CODE_PART NO	NAME	QTY
VERTICAL BALANCE BAR - ASSY 02	Q151B18130TF2	BOLT 18130150	4
	Q151B1870TF2	BOLT 18070150	4
	KQ33020T13F2LJ15RL	NUT 18150	4
	3036K2862105	REAR VERTICAL BALANCE BAR 02	2

NAME_ASSB	CODE_PART NO	NAME	QTY
VERTICAL BALANCE BAR - ASSY 02			

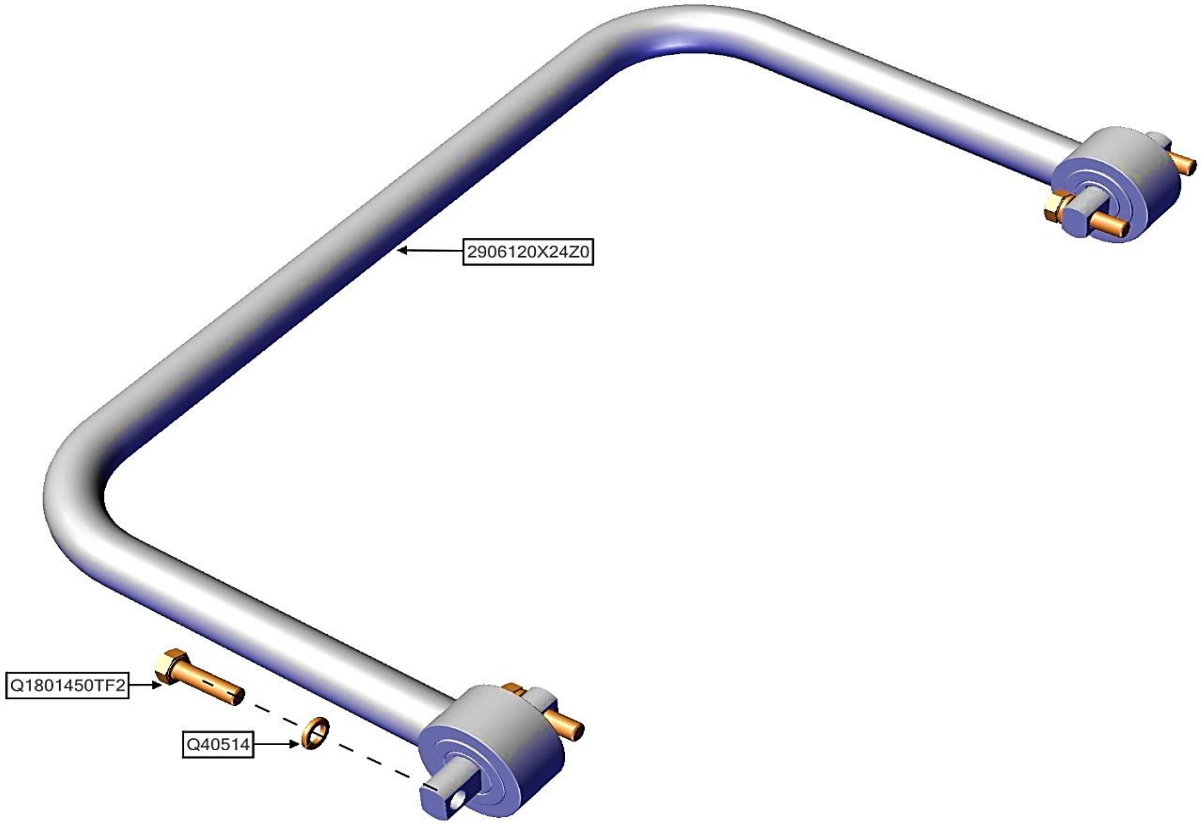

NAME_ASSB	CODE_PART NO	NAME	QTY
REAR BALANCE BAR - ASSY	Q1801450TF2	BOLT 14050150	4
	Q40514	SPLIT WASHER Ø14	4
	2906120X24Z0	REAR BALANCE BAR	1

NAME_ASSB	CODE_PART NO	NAME	QTY
REAR BALANCE BAR - ASSY			

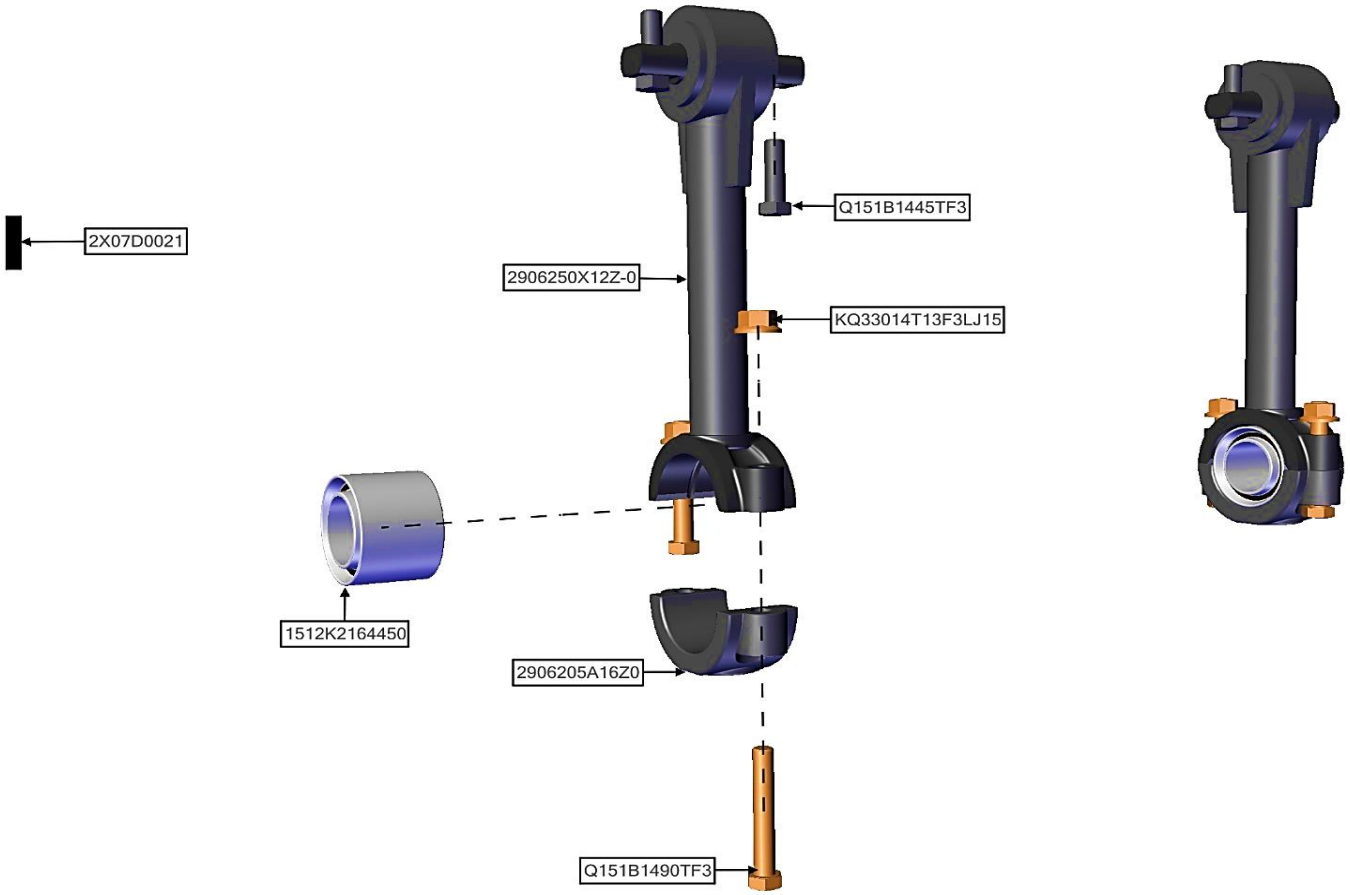

NAME_ASSB	CODE_PART NO	NAME	QTY
REAR BALANCE BAR ASSY	Q151B1490TF3	BOLT 14090150	4
	Q151B1445TF3	BOLT 14045150	4
	KQ33014T13F3LJ15	NUT 14150	4
	2906250X12Z-0	REAR BALANCE BAR AS	2
	2906205A16Z0	MOUNTING	2
	1512K2164450	RUBBER 01	2
	2X07D0021	REAR BALANCE BAR AS	2

NAME_ASSB	CODE_PART NO	NAME	QTY
REAR BALANCE BAR ASSY			

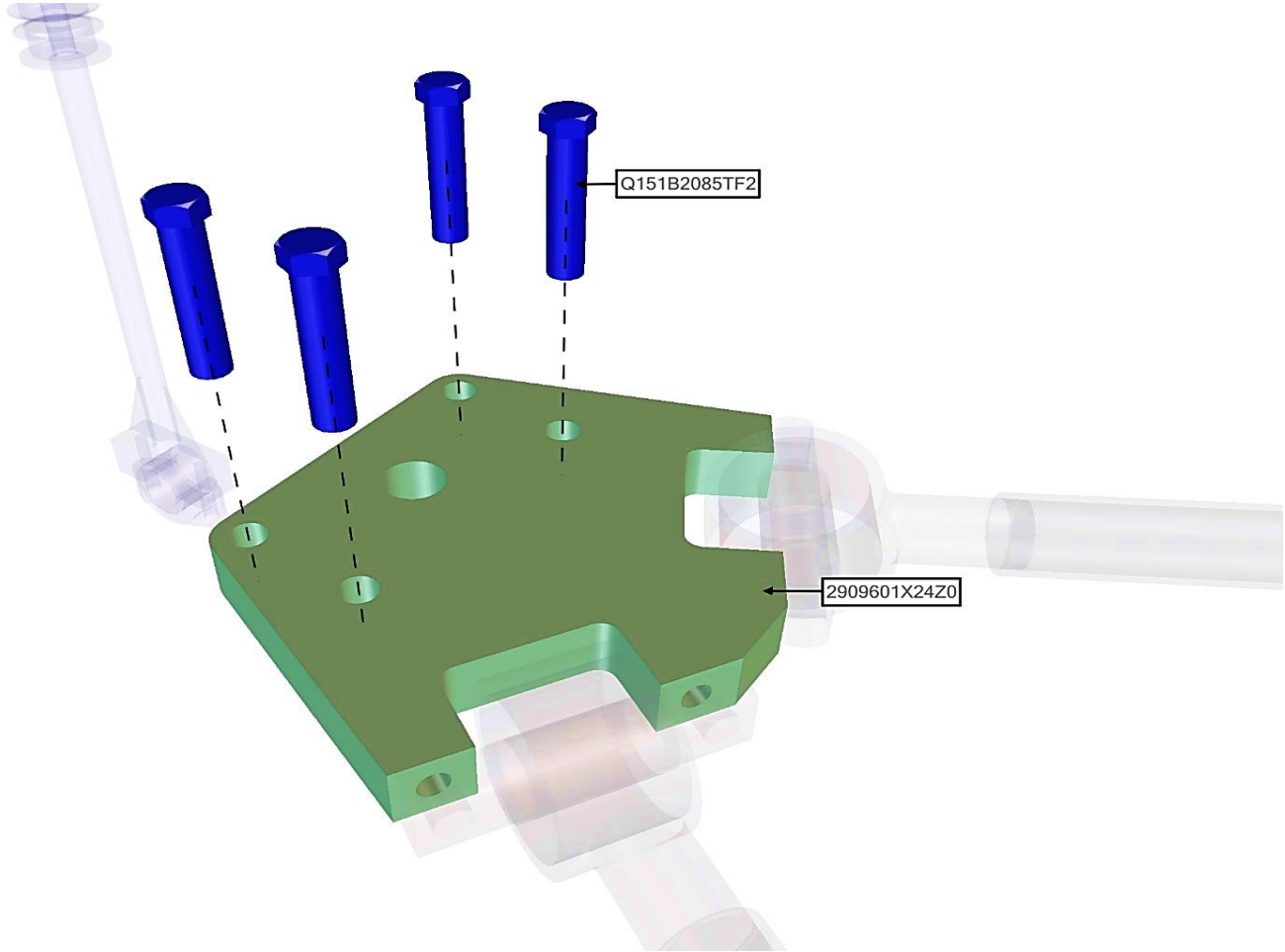

NAME_ASSB	CODE_PART NO	NAME	QTY
VERTICAL BALANCE BAR MOUNTING - ASSY	Q151B2085TF2	BOLT 20085150	4
	2909601X24Z0	BRACKET	1

NAME_ASSB	CODE_PART NO	NAME	QTY
VERTICAL BALANCE BAR MOUNTING - ASSY			

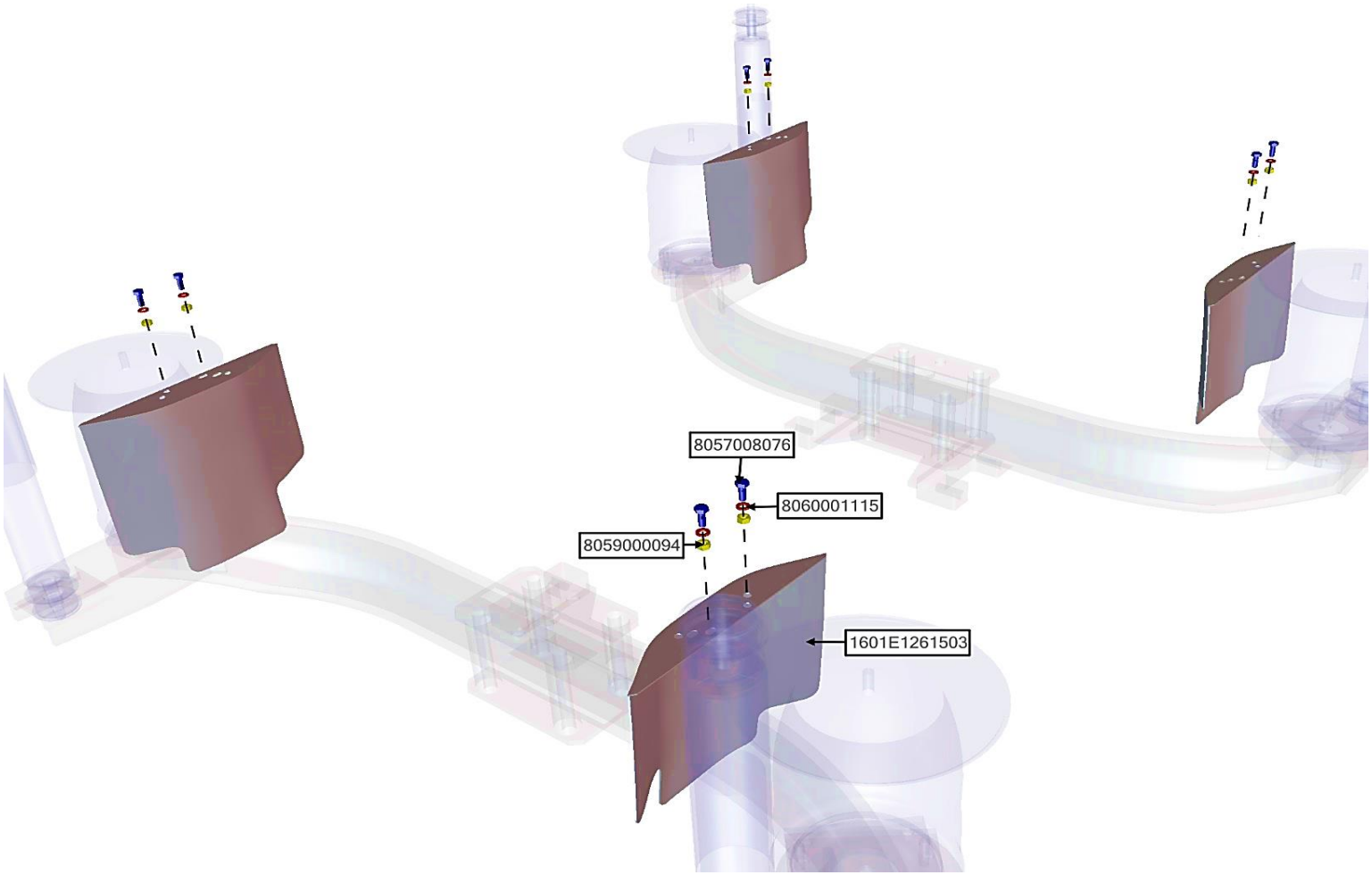

NAME_ASSB	CODE_PART NO	NAME	QTY
COVER - ASSY	8057008076	BOLT 08020125	8
	8059000094	NUT 08125	8
	8060001115	WASHER Ø08	8
	1601E1261503	AIRBAG COVER	4

NAME_ASSB	CODE_PART NO	NAME	QTY
COVER - ASSY			

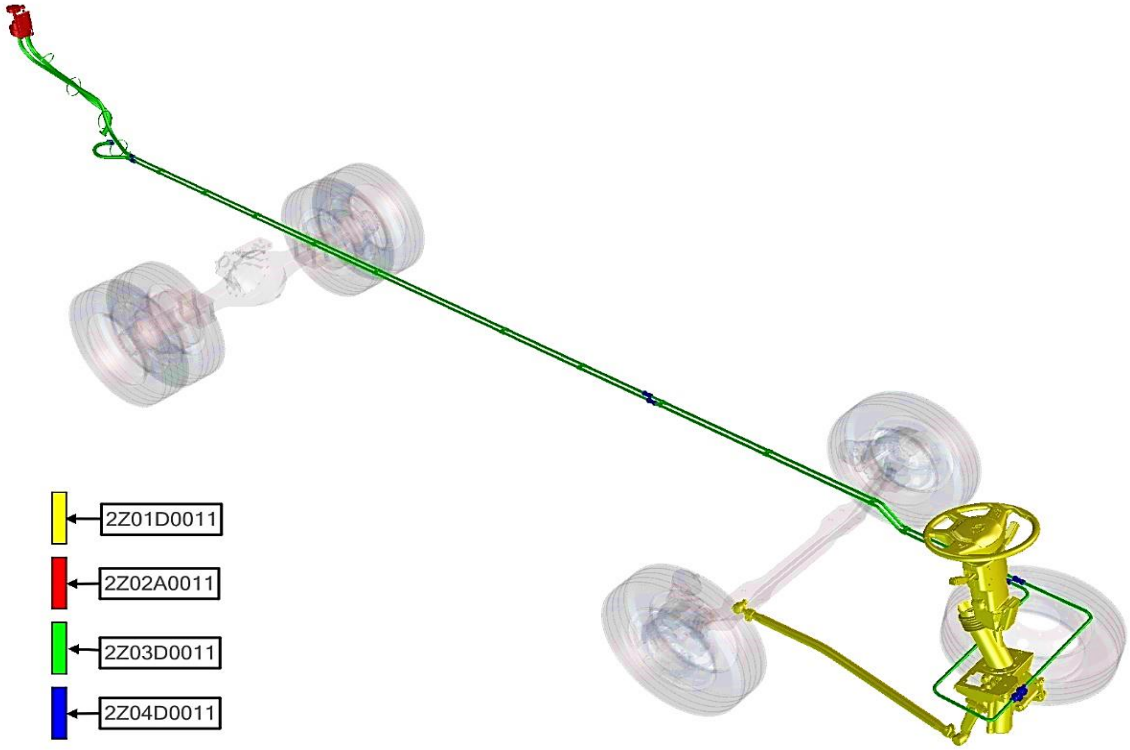

NAME_ASSB	CODE_PART NO	NAME	QTY
STEERING SYSTEM	2Z02A0011	THE POWER STEERING	1
	2Z04D0011	CONNECTOR SYSTEM	1
	2Z03D0011	STEERING SUPPORT PIPE - ASSY	1
	2Z01D0011	STEERING DRIVE - ASSY	1

NAME_ASSB	CODE_PART NO	NAME	QTY
STEERING SYSTEM			

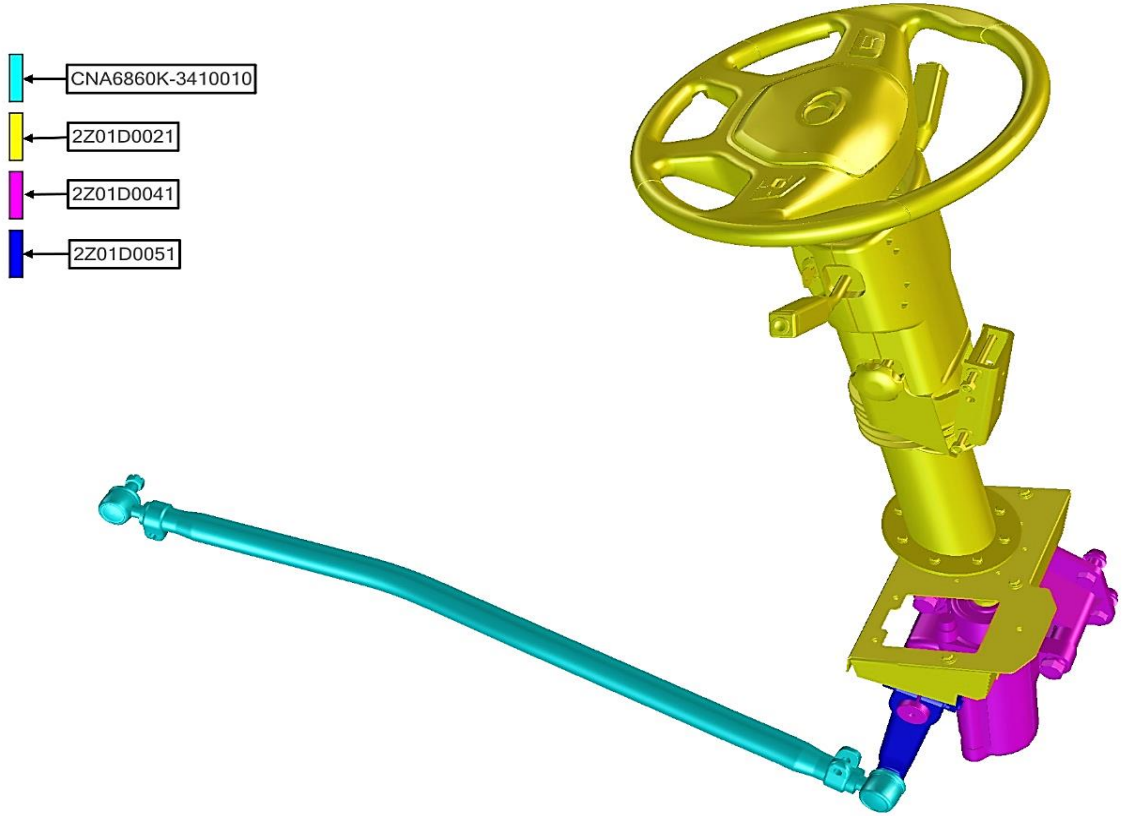

NAME_ASSB	CODE_PART NO	NAME	QTY
STEERING DRIVE - ASSY	2Z01D0021	STEERING SHAFT - ASSY	1
	2Z01D0041	STEERING BOX - ASSY	1
	2Z01D0051	STEERING ARM - ASSY	1
	CNA6860K-3410010	STEERING POLE	1

NAME_ASSB	CODE_PART NO	NAME	QTY
STEERING DRIVE - ASSY			

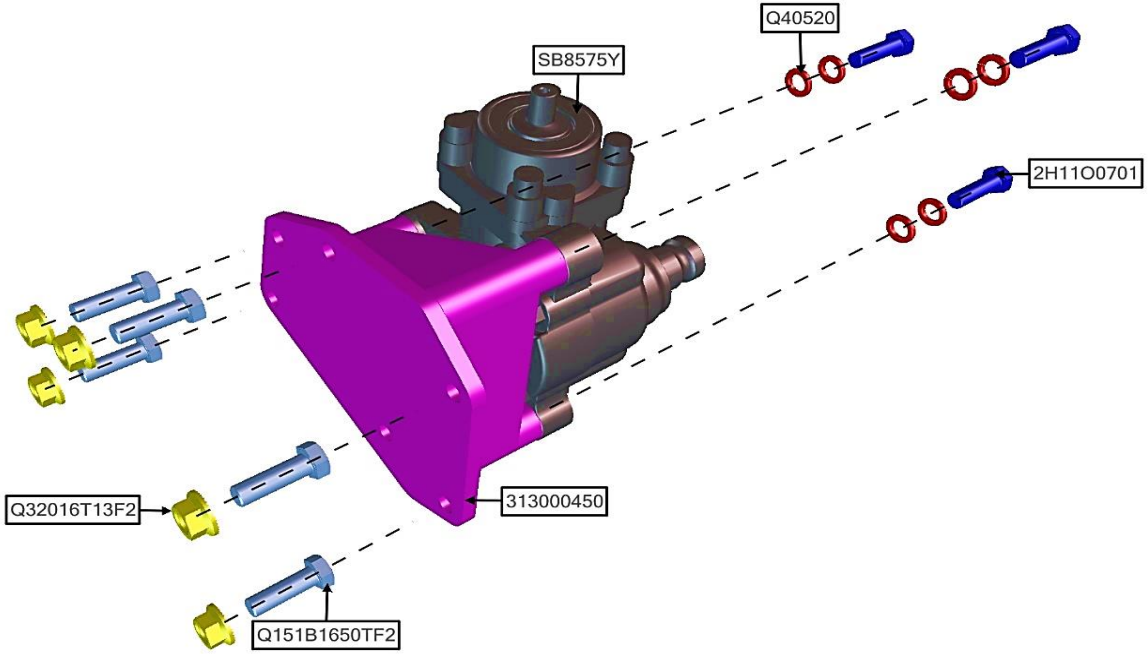

NAME_ASSB	CODE_PART NO	NAME	QTY
STEERING BOX - ASSY	Q40520	SPLIT WASHER Ø20	6
	2H11O0701	BOLT 20070150	6
	Q32016T13F2	NUT 16175	5
	Q151B1650TF2	BOLT 16050150	5
	313000450	BRACKET	1
	SB8575Y	STEERING BOX	1

NAME_ASSB	CODE_PART NO	NAME	QTY
STEERING BOX - ASSY			

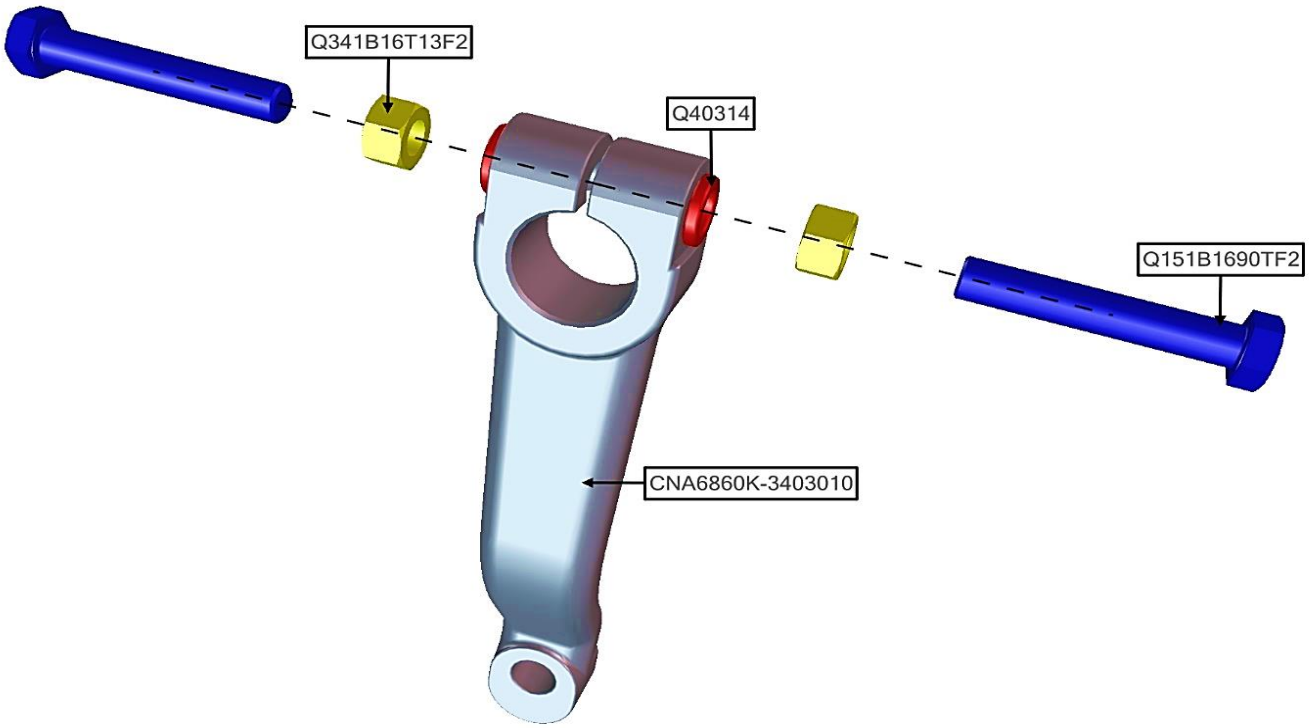

NAME_ASSB	CODE_PART NO	NAME	QTY
STEERING ARM - ASSY	Q40314	ĐỆM VÊNH Ø16	2
	Q341B16T13F2	NUT 16150	2
	Q151B1690TF2	BOLT 16090150	2
	CNA6860K-3403010	STEERING ARM - ASSY	1

NAME_ASSB	CODE_PART NO	NAME	QTY
STEERING ARM - ASSY			

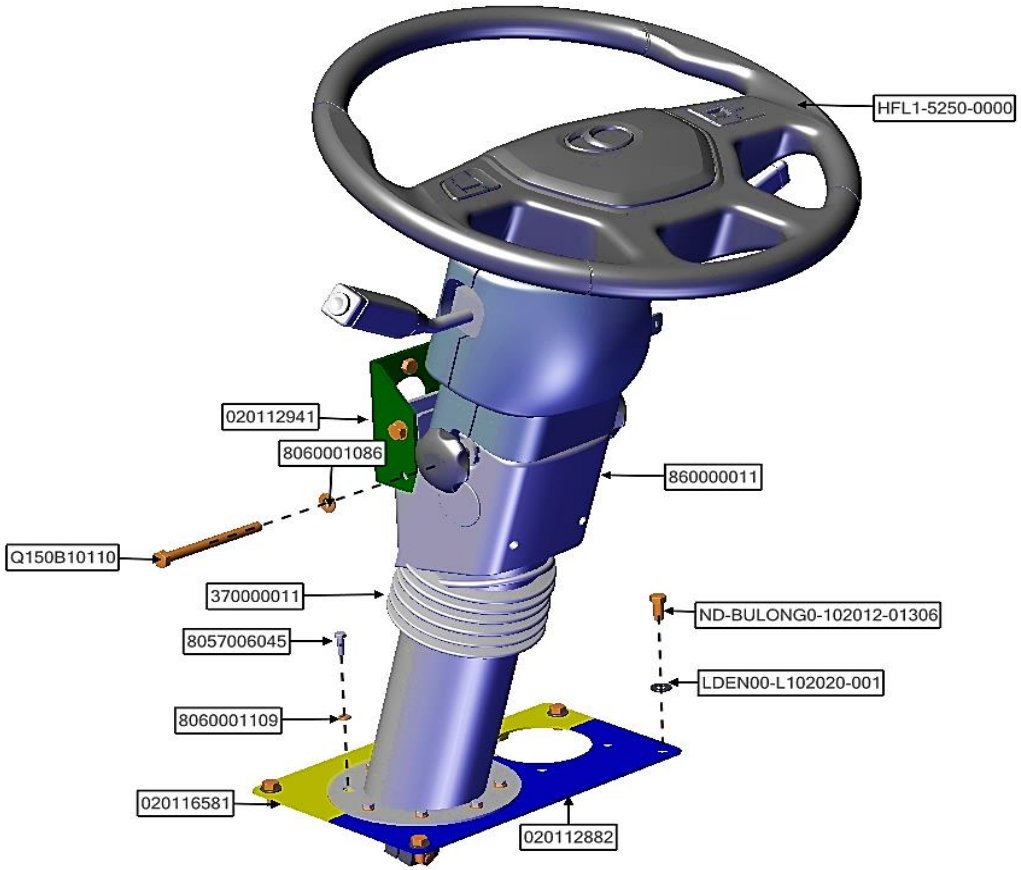

NAME_ASSB	CODE_PART NO	NAME	QTY
DRIVER - ASSY	HFL1-5250-0000	STEERING WHEEL	1
	LDEN00-L102020-001	WASHER Ø10	5
	8060001086	WASHER Ø10	1
	8060001109	WASHER Ø06	8
	860000011	STEERING SHAFT	1
	020112882	DUAL BRAKE BRACKET 02	1
	020116581	DUAL BRAKE BRACKET 01	1

NAME_ASSB	CODE_PART NO	NAME	QTY
DRIVER - ASSY	020112941	STEERING BRACKET	1
	370000011	STEERING SHAFT COVER	1
	Q150B10110	BOLT 10110150	2
	ND-BULONG0-102012-01306	BOLT 10020125	5
	8057006045	BOLT 06020100	6

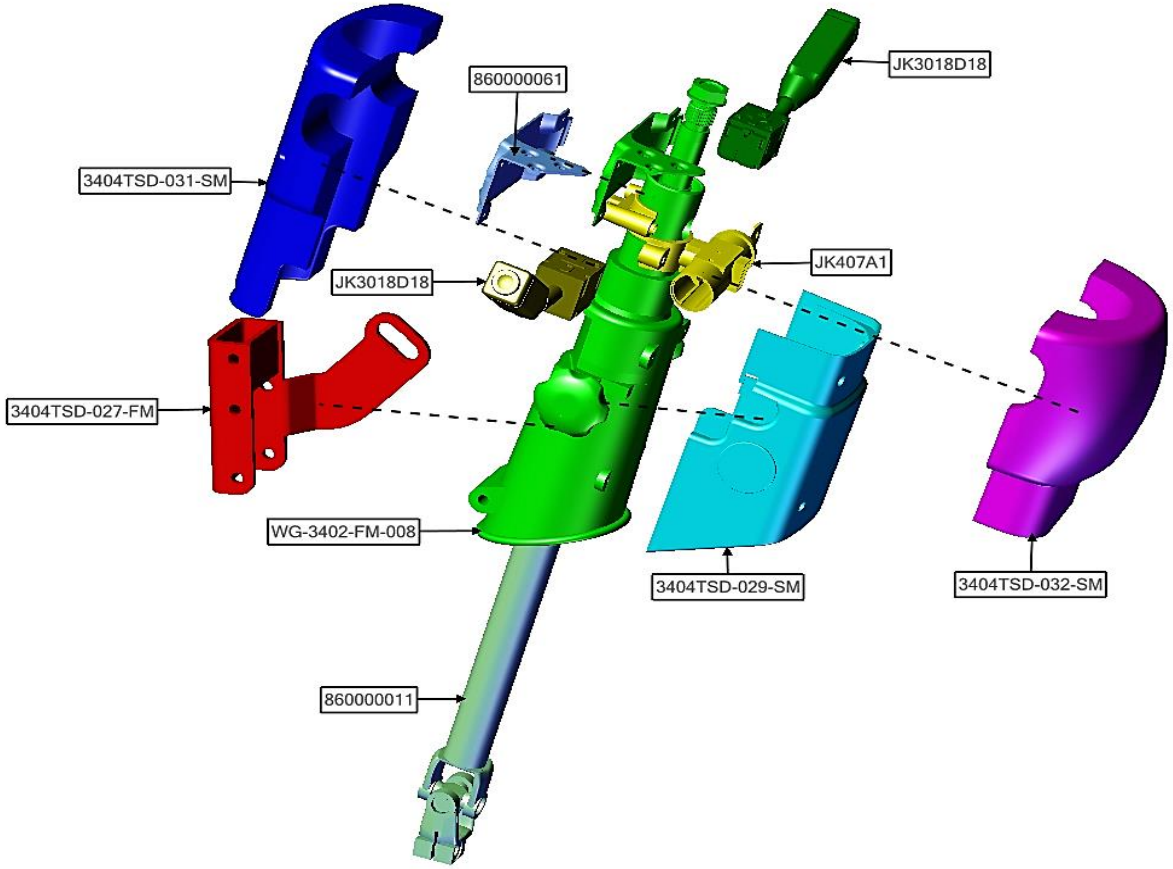

NAME_ASSB	CODE_PART NO	NAME	QTY
STEERING SHAFT	JK407A1	STEERING SHAFT LOCK	1
	3404TSD-031-SM	FRONT COVER	1
	3404TSD-032-SM	UPPER REAR COVER	1
	3404TSD-029-SM	LOWER REAR COVER	1
	WG-3402-FM-008	MAIN SHAFT	1
	3404TSD-027-FM	STEERING SHAFT BRACKET	1
	860000061	BRACKET	1

NAME_ASSB	CODE_PART NO	NAME	QTY
STEERING SHAFT	860000011	STEERING PROPELLER	1
	JK3018D18	LH LEVER ASSY	1
	JK3018D18	RH LEVER ASSY	1

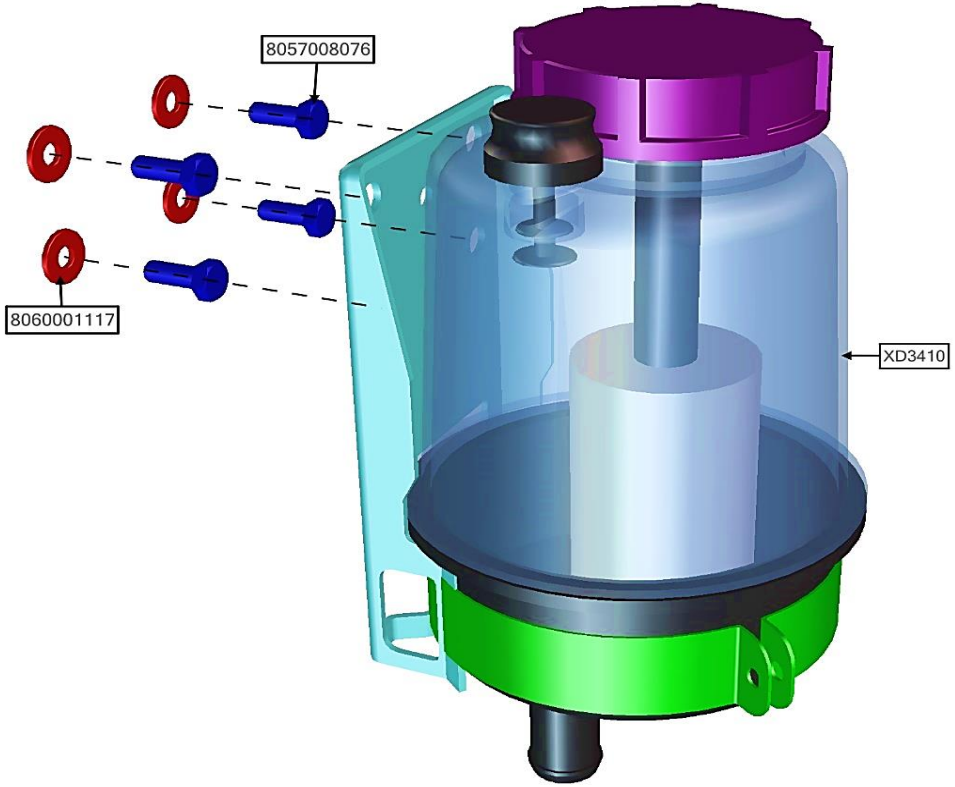

NAME_ASSB	CODE_PART NO	NAME	QTY
THE POWER STEERING	8060001117	WASHER Ø08	4
	8057008076	BOLT 08020125	4
	XD3410	THE POWER STEERING	1

NAME_ASSB	CODE_PART NO	NAME	QTY
THE POWER STEERING			

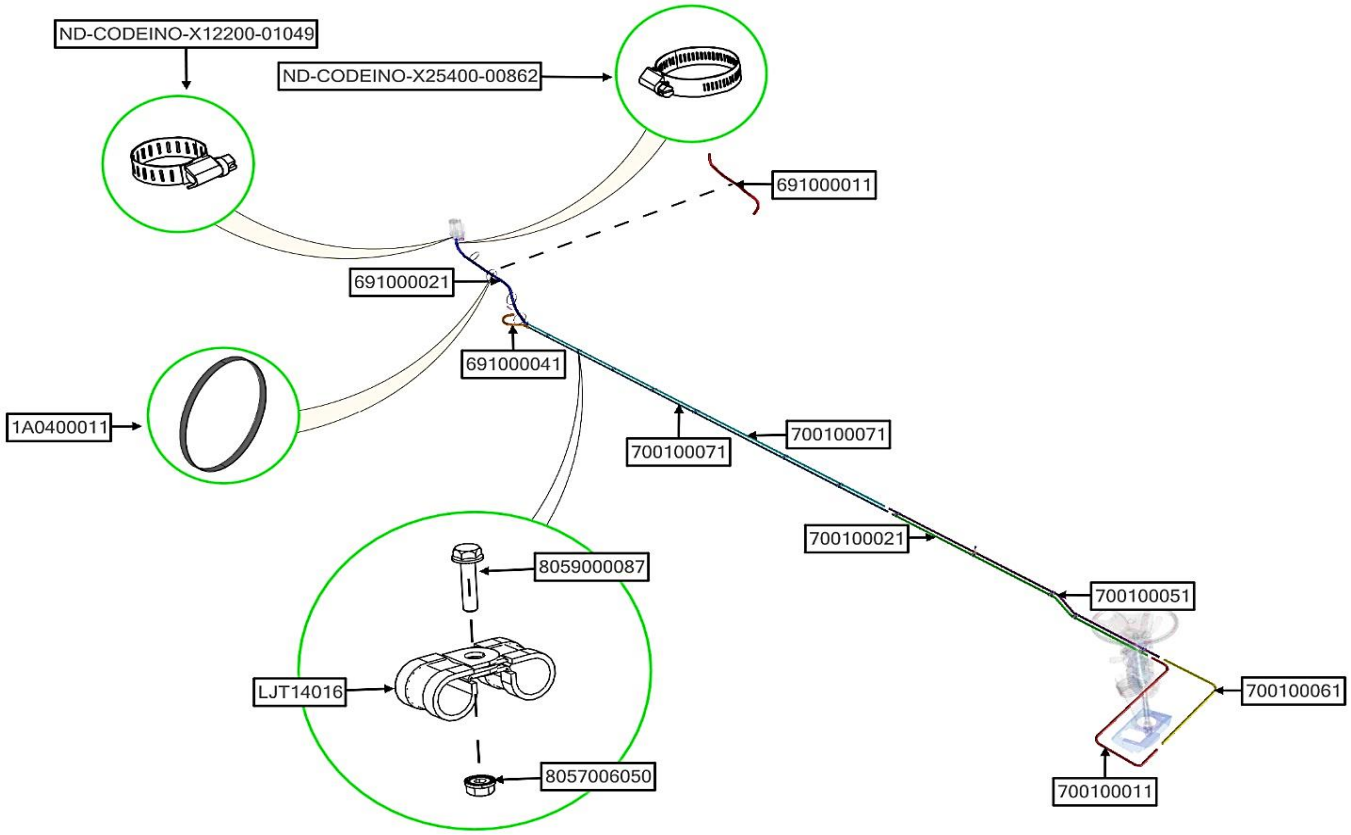

NAME_ASSB	CODE_PART NO	NAME	QTY
STEERING SUPPORT PIPE - ASSY	LJT14016	CLIP Ø16	24
	8059000087	NUT 06100	12
	8057006050	CONNECTOR 620044	12
	1A0400011	CABLE TIE 08400	4
	ND-CODEINO-X12200-01049	CLAMP 16-27	2
	ND-CODEINO-X25400-00862	CLAMP 30-45	2
	700100021	STEEL PIPE	1
	700100071	STEEL PIPE	1

NAME_ASSB	CODE_PART NO	NAME	QTY
STEERING SUPPORT PIPE - ASSY	700100051	STEEL PIPE	1
	691000041	PIPE	1
	700100061	STEEL PIPE	1
	700100011	STEEL PIPE	1
	691000021	RUBBER PIPE 03,STEERING SYSTEM	1
	691000011	RUBBER PIPE 02,STEERING SYSTEM	1
	700100081	STEEL PIPE	1

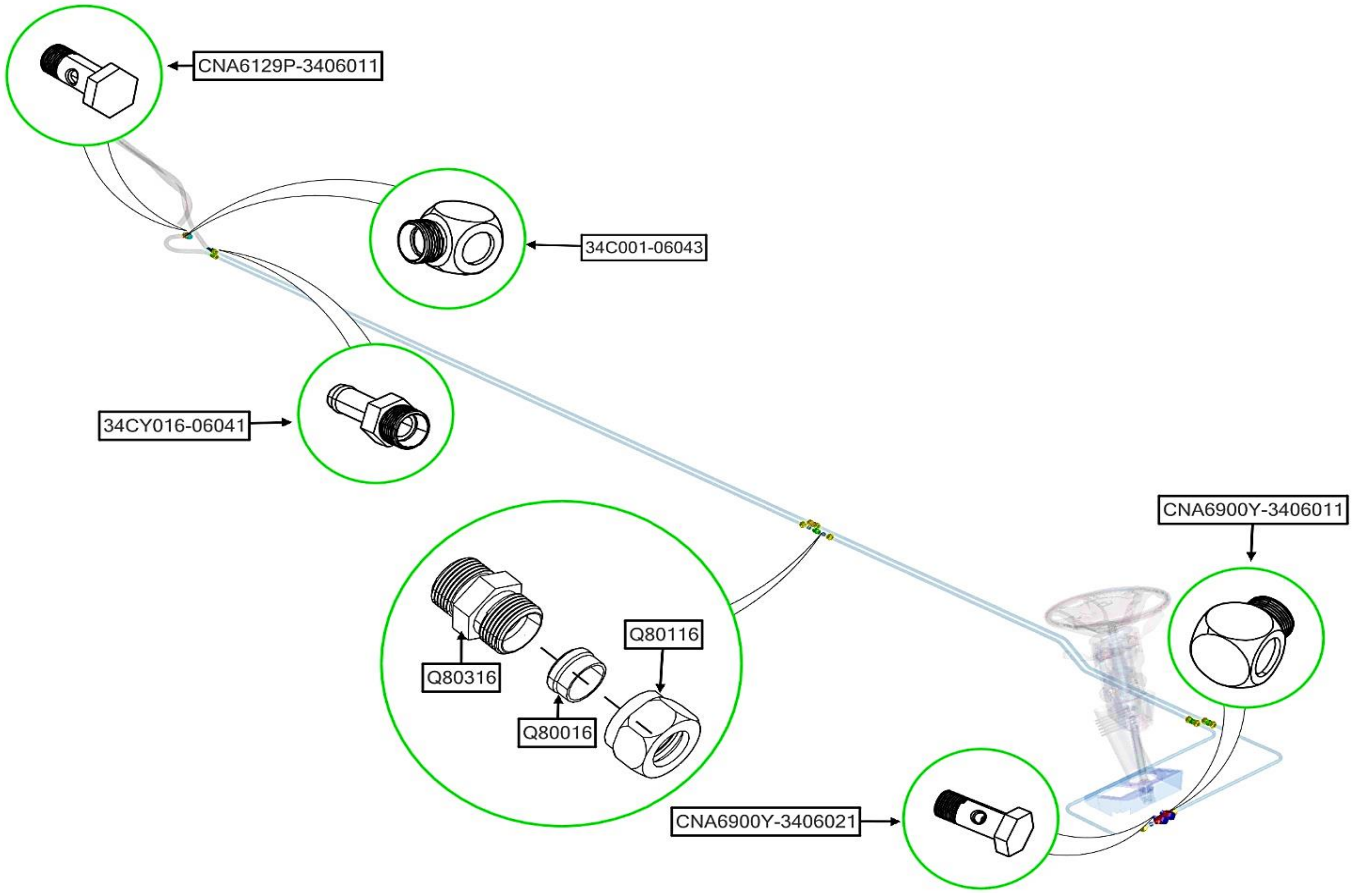

NAME_ASSB	CODE_PART NO	NAME	QTY
CONNECTOR SYSTEM	Q80116	NUT M22	12
	Q80016	OUTER CONNECTOR Ø16	12
	Q80316	CONNECTOR M22-M22	5
	CNA6900Y-3406011	HOLLOW BOLT M20	2
	CNA6900Y-3406021	FUEL DISTRIBUTOR Ø20	2
	34CY016-06041	CONNECTOR PIPE Ø16	1
	CNA6129P-3406011	HOLLOW BOLT M18	1

NAME_ASSB	CODE_PART NO	NAME	QTY
CONNECTOR SYSTEM	34C001-06043	FUEL DISTRIBUTOR Ø18	1

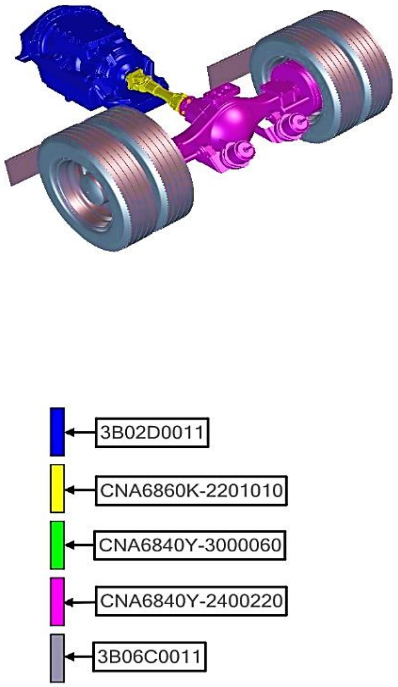

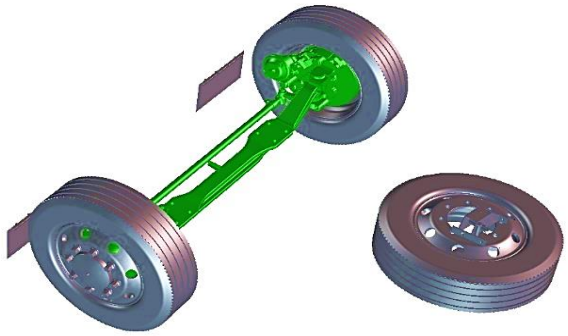

NAME_ASSB	CODE_PART NO	NAME	QTY
POWERTRAIN	CNA6840Y-2400220	REAR AXLE	1
	CNA6860K-2201010	PROPELLER - ASSY	1
	3B02D0011	GEAR BOX - ASSY	1
	3B06C0011	WHEEL ASSR	1
	CNA6840Y-3000060	FRONT AXLE	1

NAME_ASSB	CODE_PART NO	NAME	QTY
POWERTRAIN			

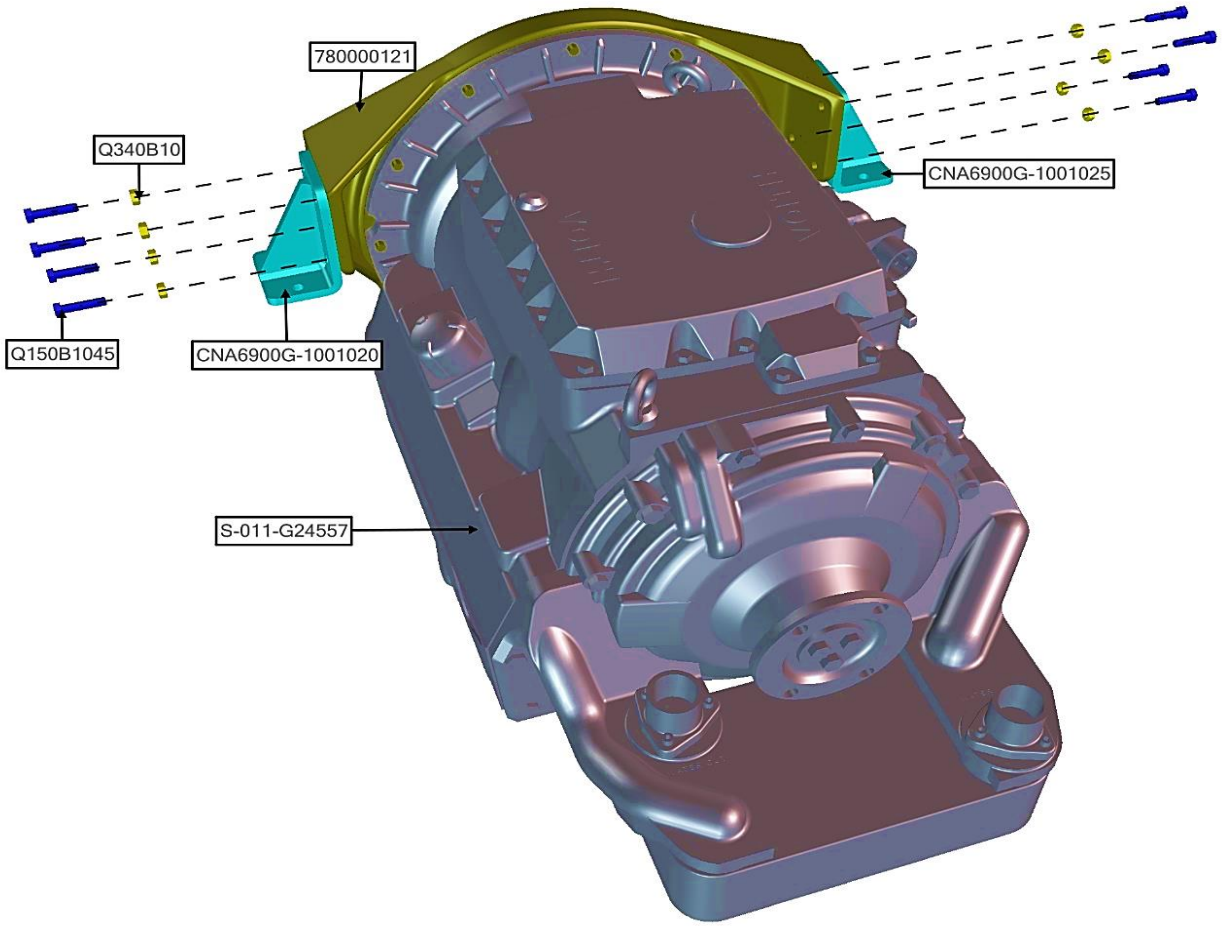

NAME_ASSB	CODE_PART NO	NAME	QTY
GEAR BOX - ASSY	Q340B10	NUT 10150	8
	Q150B1045	BOLT 10045150	8
	780000121	TORSIONAL	1
	CNA6900G-1001025	BRACKET	1
	CNA6900G-1001020	BRACKET	1
	S-011-G24557	GEAR BOX	1

NAME_ASSB	CODE_PART NO	NAME	QTY
GEAR BOX - ASSY			

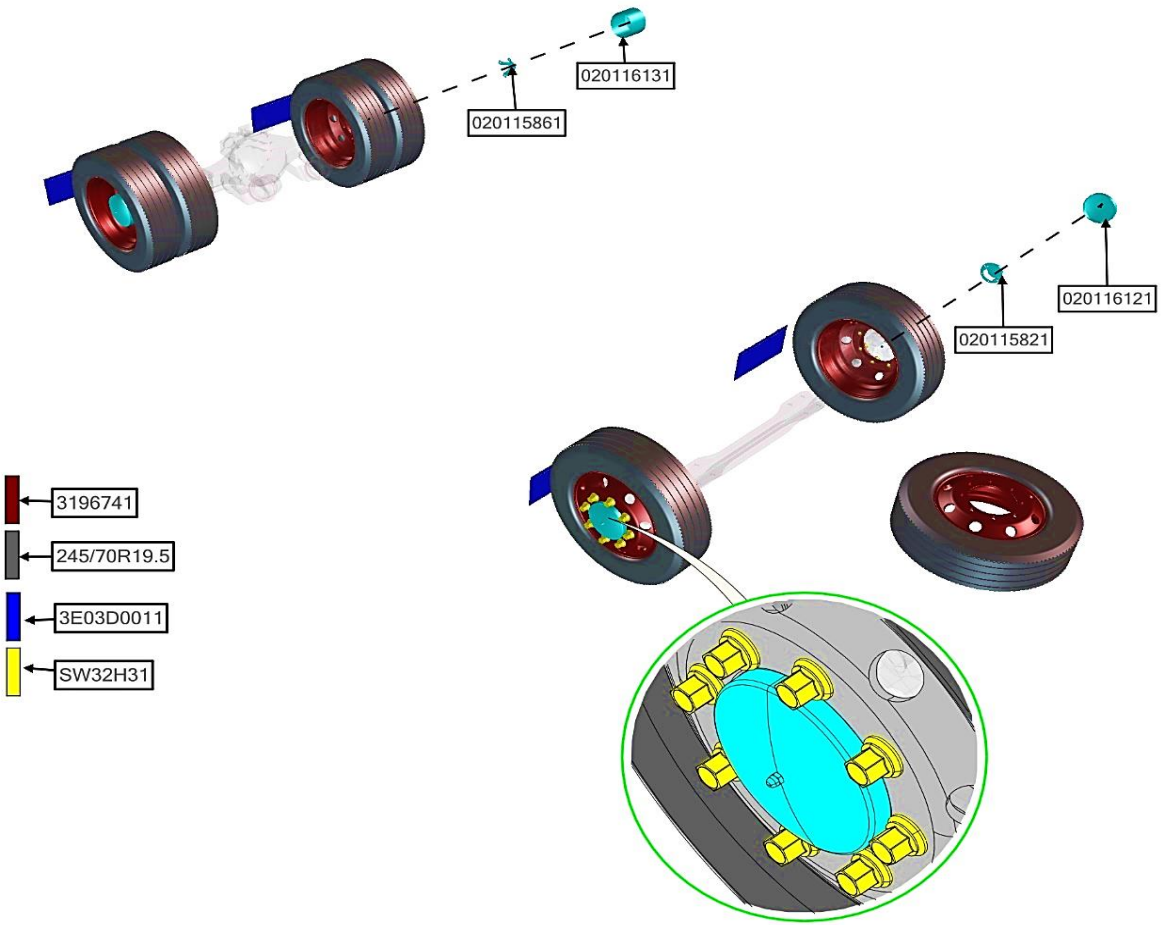

NAME_ASSB	CODE_PART NO	NAME	QTY
WHEEL ASSY	SW32H31	NUT	32
	3196741	RIM	7
	245/70R19.5	TIRE	7
	020116121	FRONT AXLE COVER	2
	020115821	BRACKET	2
	020116131	REAR AXLE COVER	2
	020115861	BRACKET	1

NAME_ASSB	CODE_PART NO	NAME	QTY
WHEEL ASSY	3E03D0011	DUSTY PANNEL	1

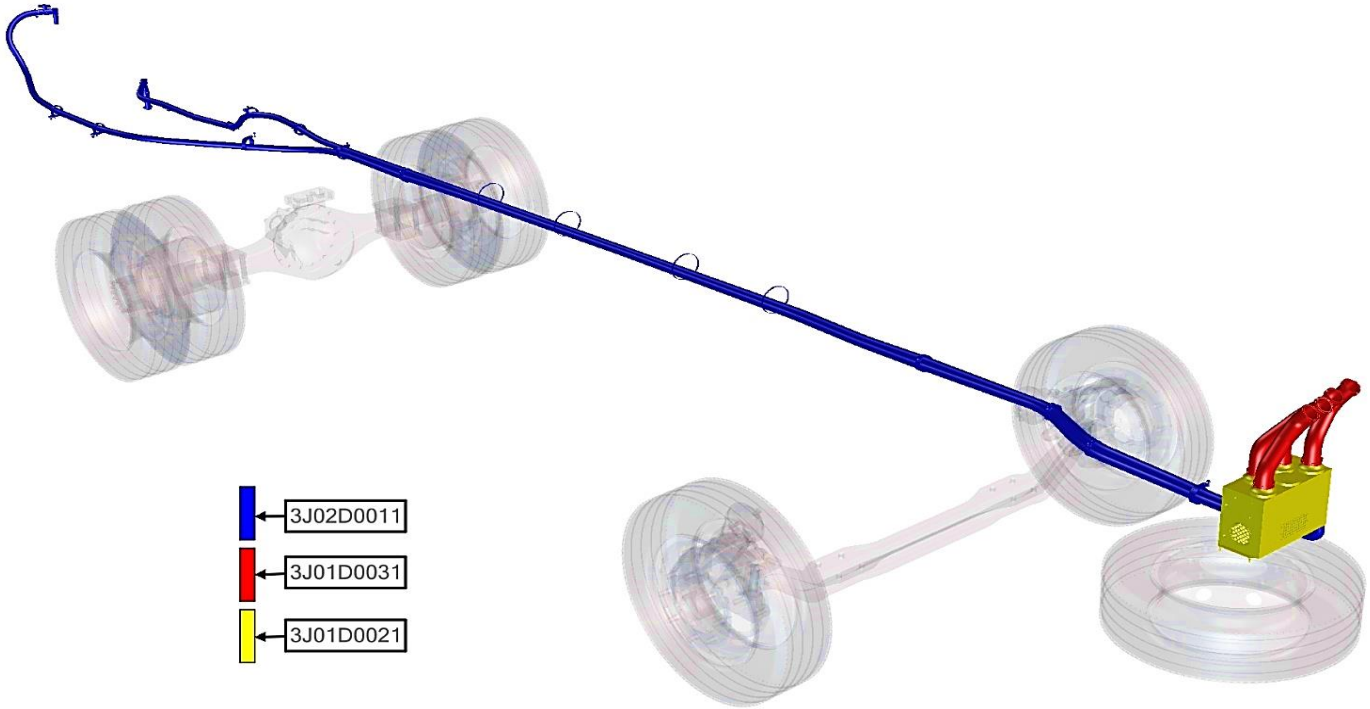

NAME_ASSB	CODE_PART NO	NAME	QTY
GLASS HEATING SYSTEM	3J01D0031	PIPE - ASSY	1
	3J01D0021	VALVE	1
	3J02D0011	PIPE - ASSY	1

NAME_ASSB	CODE_PART NO	NAME	QTY
GLASS HEATING SYSTEM			

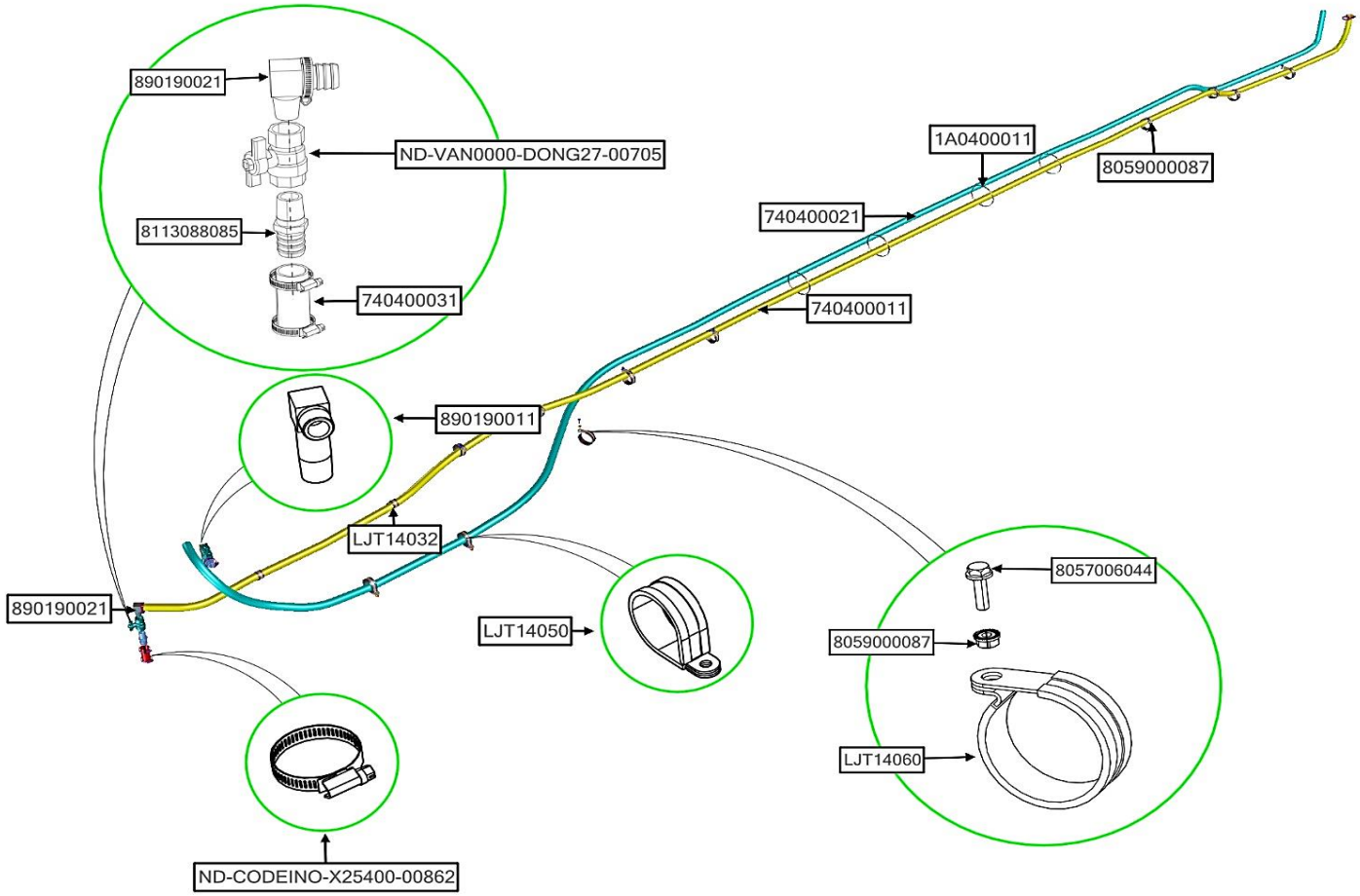

NAME_ASSB	CODE_PART NO	NAME	QTY
PIPE - ASSY	8059000087	NUT 06100	15
	8057006044	BOLT 06020100	15
	LJT14060	CLIP Ø60	7
	ND-CODEINO-X25400-00862	CLAMP 25-40	6
	1A0400011	CABLE TIE 08400	4
	LJT14050	CLAIM Ø50	4
	8113088085	CONECTOR Ø25	2

NAME_ASSB	CODE_PART NO	NAME	QTY
PIPE - ASSY	ND-VAN0000-DONG27-00705	HEATING WATER LOCK VALVE	2
	LJT14032	CLAIM Ø32	2
	890190011	CONECTOR	1
	890190021	CONECTOR	1
	740400011	PIPE 01	1
	740400021	PIPE 02	1
	740400031	PIPE 03	1

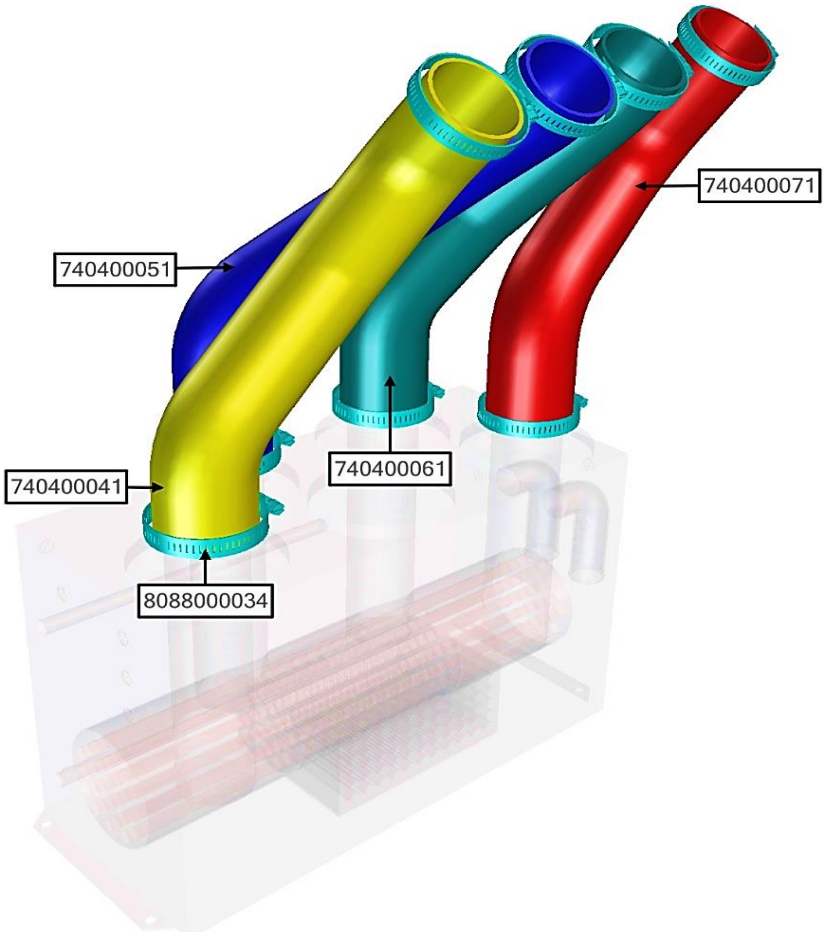

NAME_ASSB	CODE_PART NO	NAME	QTY
PIPE - ASSY	8088000034	CLAMP 40-60	8
	740400071	PIPE	1
	740400061	PIPE	1
	740400051	PIPE	1
	740400041	PIPE	1

NAME_ASSB	CODE_PART NO	NAME	QTY
PIPE - ASSY			

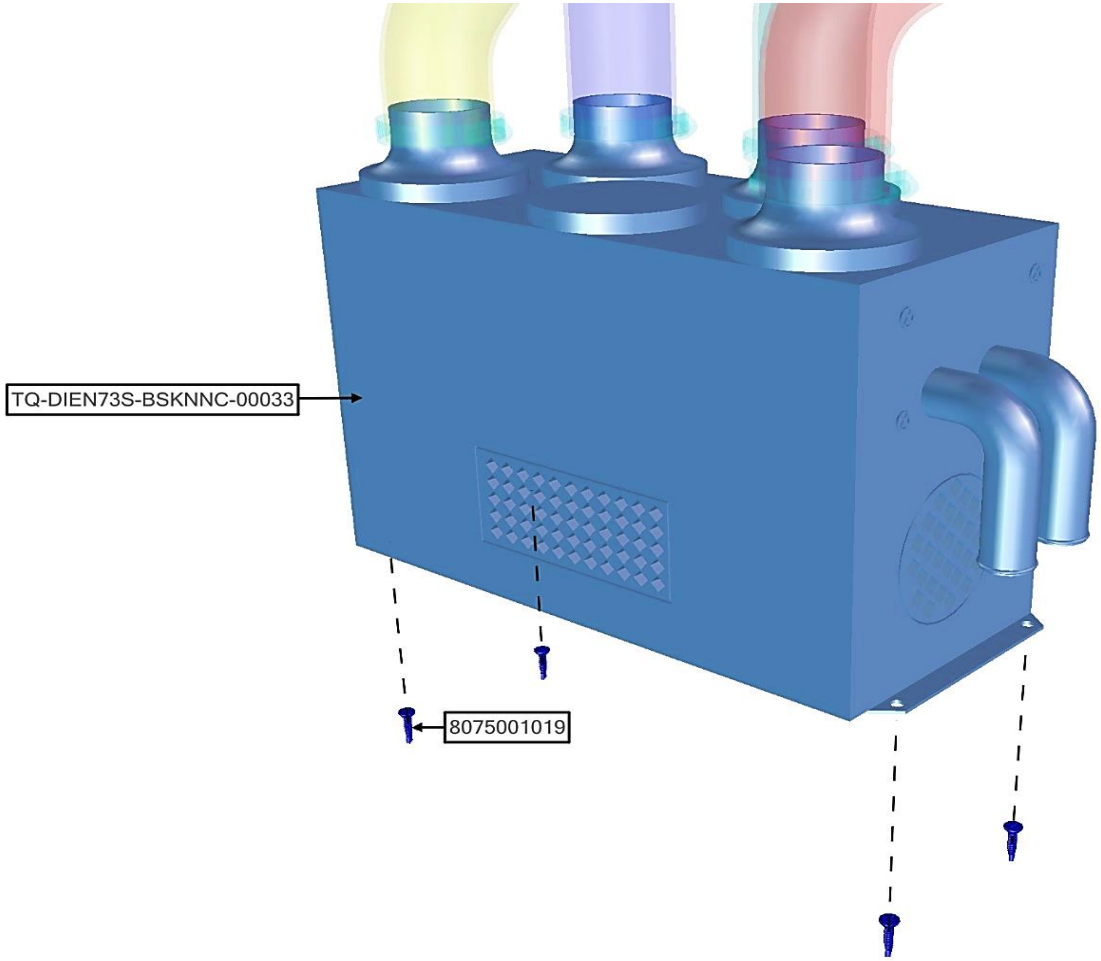

NAME_ASSB	CODE_PART NO	NAME	QTY
VALVE	8075001019	CREW 0525	4
	TQ-DIEN73S-BSKNNC-00033	GLASS HEATING TANK	1

NAME_ASSB	CODE_PART NO	NAME	QTY
VALVE			

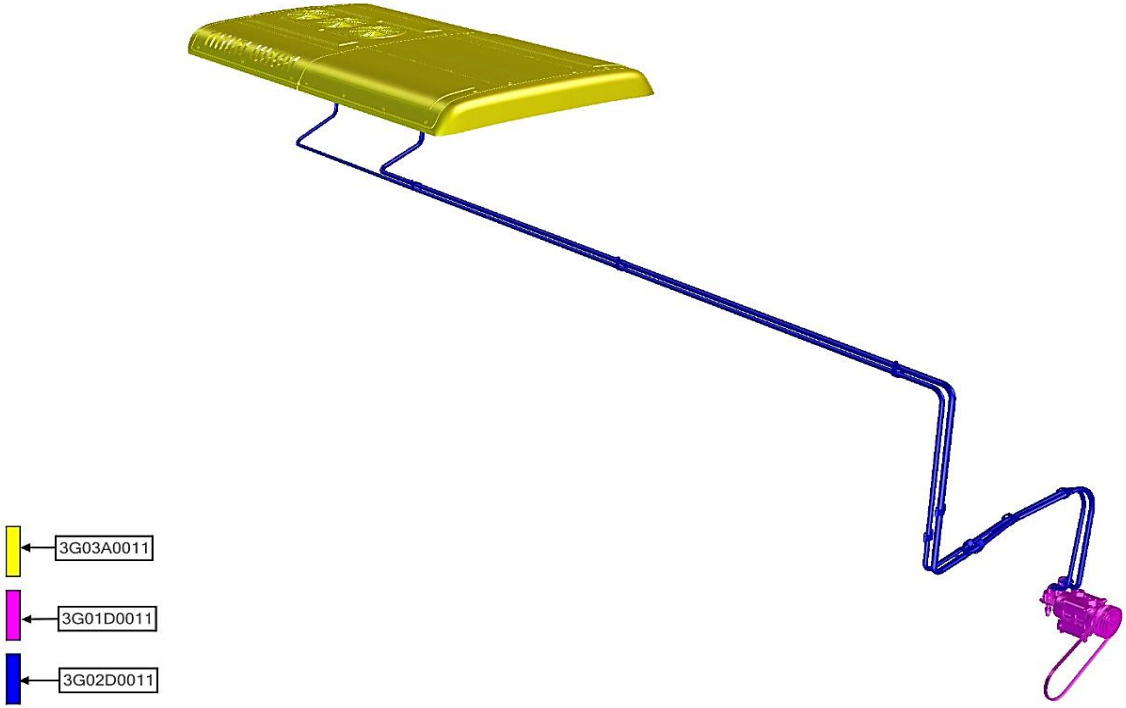

NAME_ASSB	CODE_PART NO	NAME	QTY
AIR CONDITIONING SYSTEM	3G02D0011	COMPRESSOR PIPE	1
	3G01D0011	COMPRESSOR - ASSY	1
	3G03A0011	AIR CONDITIONING PANEL	1

NAME_ASSB	CODE_PART NO	NAME	QTY
AIR CONDITIONING SYSTEM			

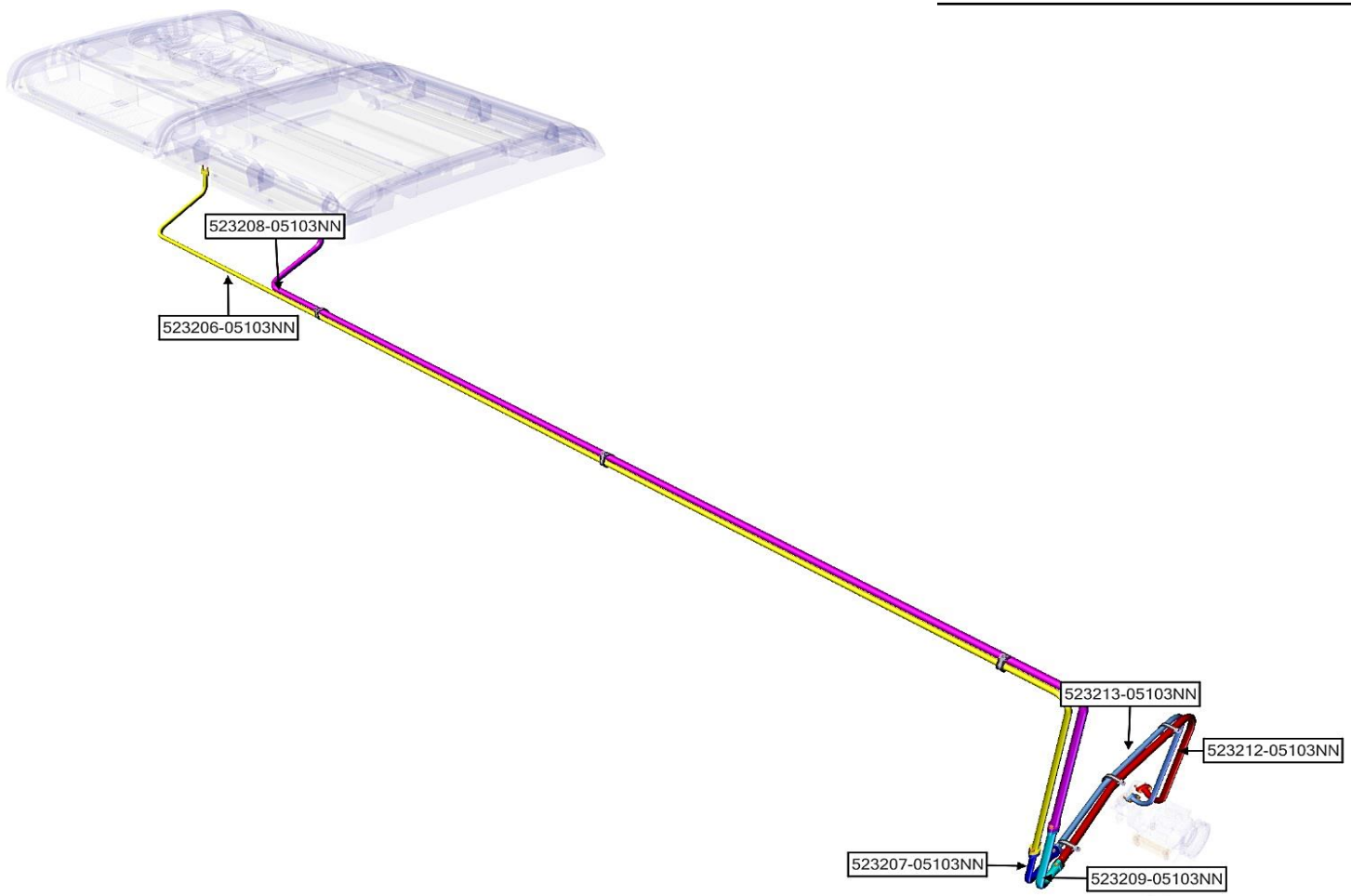

NAME_ASSB	CODE_PART NO	NAME	QTY
PIPE - ASSY	523206-05103NN	PIPE	1
	523207-05103NN	PIPE	1
	523208-05103NN	PIPE	1
	523209-05103NN	PIPE	1
	523212-05103NN	PIPE	1
	523213-05103NN	PIPE	1

NAME_ASSB	CODE_PART NO	NAME	QTY
PIPE - ASSY			

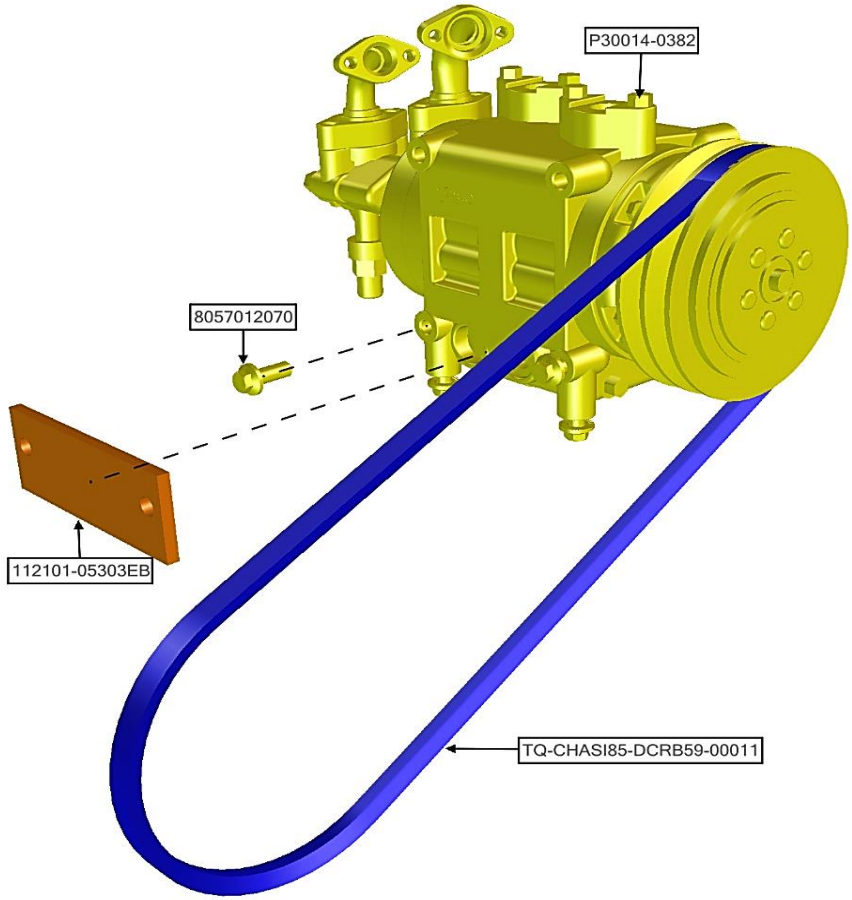

NAME_ASSB	CODE_PART NO	NAME	QTY
COMPRESSOR - ASSY	8057012070	BOLT 12030175	6
	TQ-CHASI85-DCRB59-00011	BELT - ASSY	1
	P30014-0382	COMPRESSOR	1
	112101-05303EB	BRACKET	1

NAME_ASSB	CODE_PART NO	NAME	QTY
COMPRESSOR - ASSY			