# TABLE OF CONTENTS

**EXTERIOR** 01
GLASS 02
GLASS SIDE 03
WIND GLASS 05
FRONT 06
FRONT BUMPER 07
FRONT MIDDLE BUMPER 08
BUMPER ASSY-FR,CORNER,RH 09
BUMPER ASSY-FR,CORNER,LH 10
FLAP ASSY - FRT BODY 11
LAMP FRONT - ASSY 12
LAMP ASSY- HEAD RH 13
LAMP ASSY- HEAD LH 14
WINDSHIELD WIPER - ASSY 15
MIRROR ASSY - OUTSIDE 16
SPOILER ASSY 17
FRONT SPOLIER - ASSY 18
FRONT SPOLIER - ASSY - RH 19
FRONT SPOLIER - ASSY - LH 20
FRONT MIDDLE PANEL - ASSY 21
COVER ASSY 22
REAR 23
REAR BUMPER - ASSY 24
REAR LAMP - ASSY 25
REAR LAMP LH - ASSY 26
REAR LAMP LH 27
REAR LAMP RH - ASSY 28
REAR LAMP RH 29
REAR SPOILER - ASSY 30
REAR PANEL - ASSY 31
SIDE BUS 32

**INTERIOR** 33
WIND DUCT ASSY 34
CURTAIN ASSY 35
SUNVISOR ASSY 36
SIDE CURTAIN ASSY 37
REAR CURTAIN ASSY 38

HANDRAIL ASSY 39
LUGGAGE COMPARTMENT 41
DASHBOARD ASSY 43
FACIA PANEL 44
CONNECTION DETAILS 45
SWITCH PANEL ASSEMBLY 46
SWITCH ASSEMBLY 47
PANEL ASSEMBLY 48
COMPONENT PART 49
SEATS 50
REAR RIGHT DOUBLE SEAT 52
REAR LEFT DOUBLE SEAT 53
LUGGAGE COMPARTMENT 54
PANEL ASSY 55
FLOOR ASSY,LUGGAGE COMPARTMENT 57
SAFETY SYSTEM 58
SIDE BUS 59
SIDE RH 60
SIDE LH 62
FLOOR ASSY 64
HATCHES - ASSY 65
FLOOR SPLINT 66
COVER ASSY,FLOOR SPLINT 68
COVER ASSY, AISLE LIGHTS 69
SLIDING RAIL ASSY,SEAT 70
FLOORING BOARD - ASSY 71
COVER ASSY, STEP 73
FUNCTIONAL SYSTEM 74
CEILING 75
FRONT HEADLINING ASSY 76
REAR HEADLINING ASSY 78
MIDDLE CEILING 79
FLOORING CELING 80

**BODY** 81
FLAP - ASSY 82
REAR FLAP ASSY 83
REAR FLAP LEVER ARM - ASSY 85
LUGGAGE FLAP ASSY 86
LUGGAGE FLAP LEVER ARM - ASSY 88
LINK - ASSY 89
GRID FLAP ASSY 90

GRID FLAP RH 91
GRID FLAP LH 93
ELECTRICAL CABINET FLAP ASSY 95
LH ELECTRICAL CABINET FLAP ASSY 96
RH ELECTRICAL CABINET FLAP ASSY 98
TANK FUEL FLAP ASSY 100
TANK FUEL FLAP RH ASSY 101
TANK FUEL FLAP LH ASSY 102
REAR FENDER FLAP ASSY 103
REAR FENDER FLAP RH 104
REAR FENDER FLAP LH 106
FRONT FENDER FLAP ASSY 108
FRONT FENDER FLAP RH 109
FRONT FENDER FLAP LH 111
DOOR - ASSY 113
PASSENGER DOOR - ASSY 114
PASSENGER DOOR LEVER ARM ASSY 115
STOPPER - ASSY 116
PASSENGER DOOR TURNBUCKLE - ASSY 117
PASSENGER DOOR PUMB PILLAR - ASSY 118
PASSENGER DOOR 119
MOULDING 120
WEATHERSTRIP 121
EMERGENCY DOOR 122
FRONT FRAME - ASSY 123
CONNECTING ITEM 124
WINDSCREEN WIPER CONNECTING ITEM 125
EXTERIOR CONNECTING ITEM 126
INTERIOR CONNECTING ITEM 128
FRONT FRAME 129
REAR FRAME - ASSY 131
CONNECTING ITEM 132
REAR FRAME 133
SIDE FRAME - ASSY 135
RH SIDE FRAME - ASSY 136
CONNECTING ITEM 137
RH SIDE STEEL SHEET - ASSY 139
BODY SIDE RH 140
LH SIDE FRAME - ASSY 142
CONNECTING ITEM 143
LH SIDE STEEL SHEET - ASSY 145
BODY SIDE LH 146

ROOF FRAME - ASSY 148
CONNECTING ITEM 149
ROOF STEEL SHEET - ASSY 151
ROOF FRAME 152
FLOOR FRAME - ASSY 154
CHASSIS 155
FRONT OF CONNECTING ITEM 156
REAR OF CONNECTING ITEM 157
MIDDLE CONNECTING ITEM 159
STEEL SHEET 160
STAIRS FRAME - ASSY 162
CABIN FLOOR FRAME - ASSY 164
MAIN FLOOR FRAME - ASSY 166
CONNECTING ITEM 167
STEEL SHEET - ASSY 168
MAIN FLOOR FRAME - ASSY 169
ENGINE FLOOR FRAME - ASSY 171
INSULATION 172
STEEL SHEET 173
ENGINE FLOOR FRAME 175
STEEL SHEET - ASSY 176
BATTERY COVER ASSY 177
BATTERY STEEL SHEET 178
BATTERY FRAME 179
SCR TANK COVER ASSY 180
UREA TANK COVER ASSY 181
LUGGAGE COMPARTMENTS TOLE ASSY 183
RADIATOR STEEL SHEET ASSY 184
ELECTRICAL CABINET STEEL SHEET ASSY 186

**ELECTRIC SYSTEM** 188
CONDUCTOR WIRE SYSTEM 189
REAR ELECTRICAL HARNESS - ASSY 190
CHASSIS ELECTRICAL HARNESS - ASSY 191
BATTERY WIRE 193
CHASSIS WIRE 194
A/C ELECTRICAL HARNESS 195
HEADLINING ELECTRICAL HARNESS - ASSY 196
DASHBOARD ELECTRICAL HARNESS - ASSY 197
INTERGRATED DASHBOARD WIRE 198
ELECTRICAL DEVICE 199
HEADLIGHT SYSTEM 200

LED 3D ASSY 201
SAFETY AND CONVENIENCE SYSTEM 202
TRANSFOMER POWER 203
SENSOR 204
FUSE AND RELAY 205
SWITCHS 206
SIGNAL PROCESSOR 207
HORN 208
BATTERY - ASSY 209
SOUND, IMAGE SYSTEM 210

**BARE CHASSIS 211**

CHASSIS FUNCTION SYSTEM 212
ELECTROMAGNETIC BRAKE - ASSY 213
AIR COMPRESION SYSTEM 214
SENSOR 215
DRYER ASSY 216
AIR TANK ASSY 217
WATER EXHAUST TANK ASSY 218
PURGE TANK ASSY 219
AIR PIPING 220
CONNECTOR SYSTEM 221
AIR VALVE 223
HAND BRAKE LEVER ASSY 224
ABS VALVE ASSY 225
ASR VAVLE ASSY 226
CLEAVAGE VALVE ASSY 227
REAR DISTRIBUTOR VALVE ASSY 228
FRONT DISTRIBUTOR VALVE ASSY 229
EMERGENCY VALVE ASSY 230
EMERGENCY VALVE ASSY 231
CHECK VALVE ASSY 232
TOTAL CHECK VALVE ASSY 233
LOADING VALVE ASSY 234
BRAKE VALVE ASSY 235
QUICK-RELEASE COUPLING ASSY 236
STEERING SYSTEM 237
STEERING DRIVE ASSY 238
STEERING ARM ASSY 239
STEERING BOX ASSY 240
STEERING SHAFT ASSY 241
STEERING SHAFT 242

STEERING SUPPORT PIPE ASSY 243
CONNECTOR SYSTEM 245
THE POWER STEERING 246
REAR SUSPENSION SYSTEM 247
REAR AXLE MOUNTING ASSY 248
FENDER ASSY 249
REAR AIRBAG ASSY 250
VERTICAL BALANCE BAR ASSY 01 251
VERTICAL BALANCE BAR ASSY 02 252
VERTICAL BALANCE BAR MOUNTING ASSY 253
VERTICAL BALANCE BAR MOUNTING ASSY 254
FRONT SUSPENSION SYSTEM 255
BRACKET ASSY,FRN AIR SPRING 256
LONGITUDINAL BRACING 01 257
LONGITUDINAL BRACING 02 258
LATERAL BRACING 259
FRONT STABILIZER 260
HANGER ASSY,FRT 261
AIR CONDITIONING SYSTEM 262
GAS PIPE SYSTEM 263
GAS COMPRESION ASSY 264
GLASS HEATING SYSTEM 265
POWERTRAIN 267
WHEEL ASSY 268
DIESEL ENGINE ASSY 269
MINOR ITEMS 270
ENGINE 272
ENGINE 273
HYDRAULIC PUMP ASSY 274
STARTER MOTOR ASSY 275
AIR COMPRESSOR ASSEMBLY 276
ALTERNATOR ASSY 278
TURBOCHARGER ASSY 279
OIL PIPE ASSY 280
TURBOCHARGER 281
AIR PIPE 282
BLOCK ENGINE 283
CYLINDER GROUP 284
CRANKCASE ASSEMBLY 285
CRANKCASE ASSEMBLY 286
CRANKCASE PRE-ASSEMBLY 287
OIL SEAL GROUP 288

SPRAY NOZZLE GROUP 289
ENGINE BLOCK REINFORCING PLATE GROUP 290
MAIN BEARING GROUP 291
THRUST PLATE GROUP 292
CYLINDER HEAD GROUP 293
CYLINDER HEAD ASSEMBLY 294
CYLINDER HEAD SUBASSEMBLY 295
CYLINDER HEAD COVER GROUP 296
VALVE SYSTEM 297
VALVE TRAIN GROUP 298
INTAKE ROCKER ARM SET 399
FUEL SYSTEM, ENGINE 301
FUEL INJECTION PUMP GROUP 302
FUEL INJECTION PUMP OIL PIPE GROUP 303
FUEL INJECTOR GROUP 304
FUEL INJECTOR 305
LOW PRESSURE FUEL PIPE GROUP 306
FUEL FILTER GROUP 308
INTAKE AND EXHAUST SYSTEM 309
COMMON RAIL GROUP 310
INTAKE MANIFOLD GROUPS 311
EXHAUST MANIFOLD GROUP 312
COOLING SYSTEM 313
WATER PUMP GROUP 314
WATER OUTLET PIPE GROUP 315
COOLANT FILTER GROUP 316
VENTING PIPE GROUP 317
THERMOSTAT GROUP 318
THERMOSTAT ASSEMBLY 319
ELECTRICAL AND SENSOR 320
SPEED SENSOR 321
ELECTRONIC CONTROL UNIT GROUP 322
ELECTRONIC CONTROL SYSTEM HARNESS GROUP 323
FUEL INJECTOR HARNESS 324
OIL SYSTEM 325
OIL PAN GROUP 326
OIL PAN ASSEMBLY 327
OIL DIPSTICK GROUP 328
OIL PUMP GROUP 329
OIL STRAINER GROUP 330
OIL COOLER GROUP 331
OIL COOLER AND FILTER ASSEMBLY 332

OIL FILTER ELEMENT 333
OIL FILLING TUBE GROUP 334
OIL-GAS SEPARATOR GROUP 335
TRANSMISSION SYSTEM 337
CRANKSHAFT GROUP 338
PISTON AND CONNECTING ROD GROUP 339
CONNECTING ROD ASSEMBLY 340
GEAR DRIVE GROUP 341
IDLER GEAR SET 342
IDLER GEAR ASSEMBLY 343
FLYWHEEL GROUP 344
FLYWHEEL HOUSING GROUP 345
FLYWHEEL GROUP 346
FLYWHEEL ASSEMBLY 347
MINOR ITEMS 348
FRONT COVER GROUP 349
EYE RING GROUP 350
FAN BRACKET GROUP 351
TENSIONER AND BELT GROUP 352
EXHAUST AIR SYSTEM 353
EXHAUST PIPE ASSY 354
UREA TANK ASSEMBLY 355
SCR TANK ASSEMBLY 356
COOLING SYSTEM 357
COOLING PIPE 358
RADIATOR ASSEMBLY 360
FUEL SYSTEM 361
FUEL PIPE ASSY 362
ACCELERATOR ASSEMBLY 364
FUEL FILTER ASSY 365
FUEL TANK ASSY 366

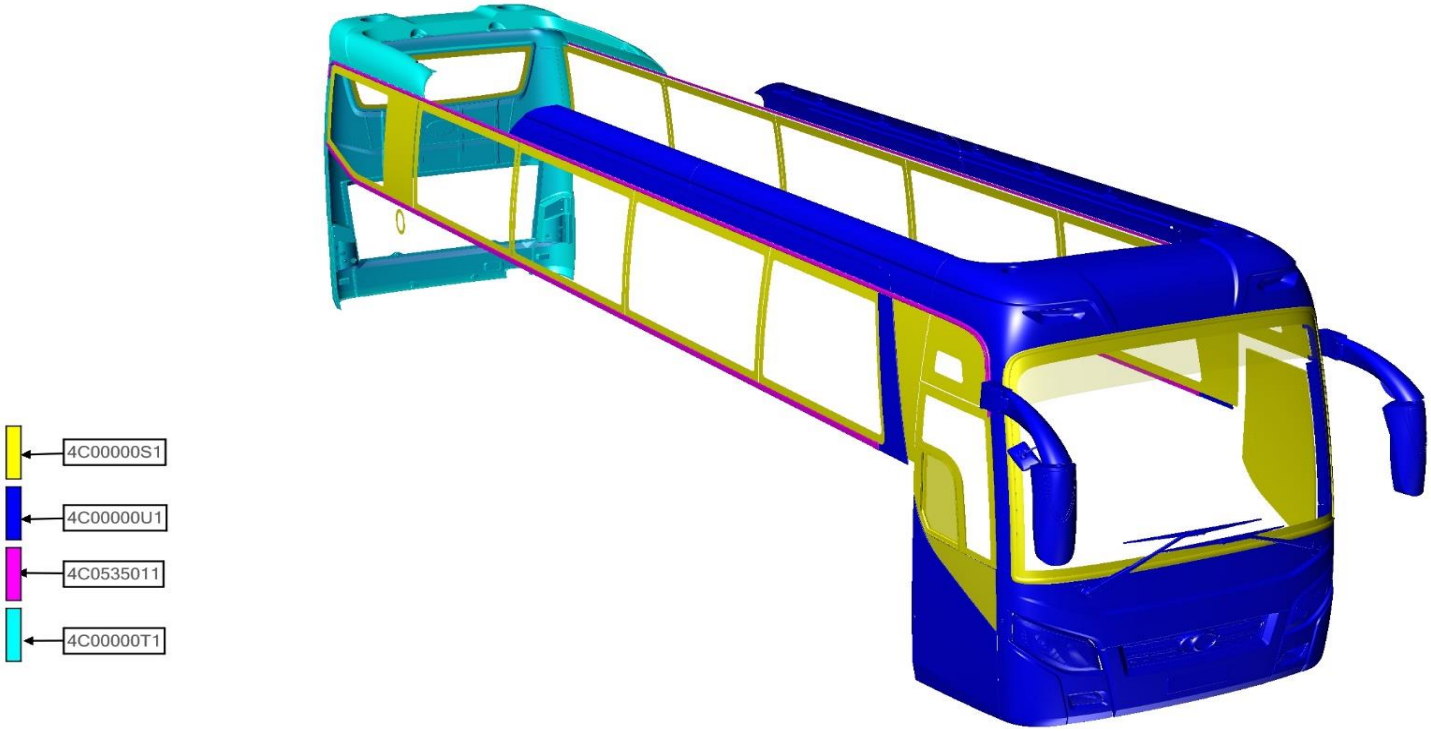


| ASSB_NAME | PART NO. | NAME | QTY |
|---|---|---|---|
| EXTERIOR | 4C00000S1 | GLASS | 1 |
| | 4C00000U1 | FRONT | 1 |
| | 4C00000T1 | REAR | 1 |
| | 4C0535011 | SIDE BUS | 1 |
| | | | |
| | | | |
| | | | |

| ASSB_NAME | PART NO. | NAME | QTY |
|---|---|---|---|
| EXTERIOR | | | |
| | | | |
| | | | |
| | | | |
| | | | |
| | | | |
| | | | |

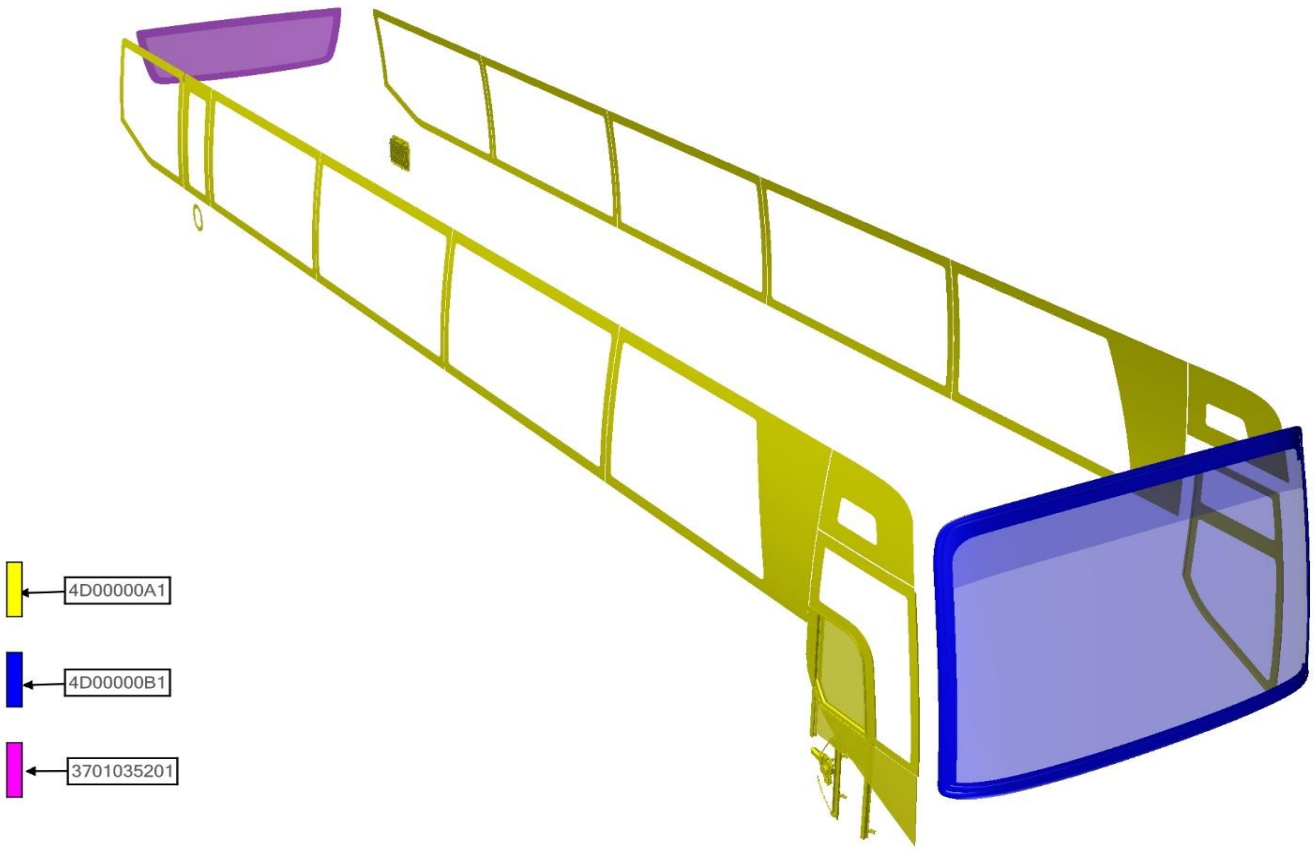


| ASSB_NAME | PART NO. | NAME | QTY |
|---|---|---|---|
| GLASS ASSY | 3701035201 | GLASS REAR | 1 |
| | 4D00000B1 | WIND GLASS | 1 |
| | 4D00000A1 | GLASS SIDE | 1 |
| | | | |
| | | | |
| | | | |
| | | | |

| ASSB_NAME | PART NO. | NAME | QTY |
|---|---|---|---|
| GLASS ASSY | | | |
| | | | |
| | | | |
| | | | |
| | | | |
| | | | |
| | | | |

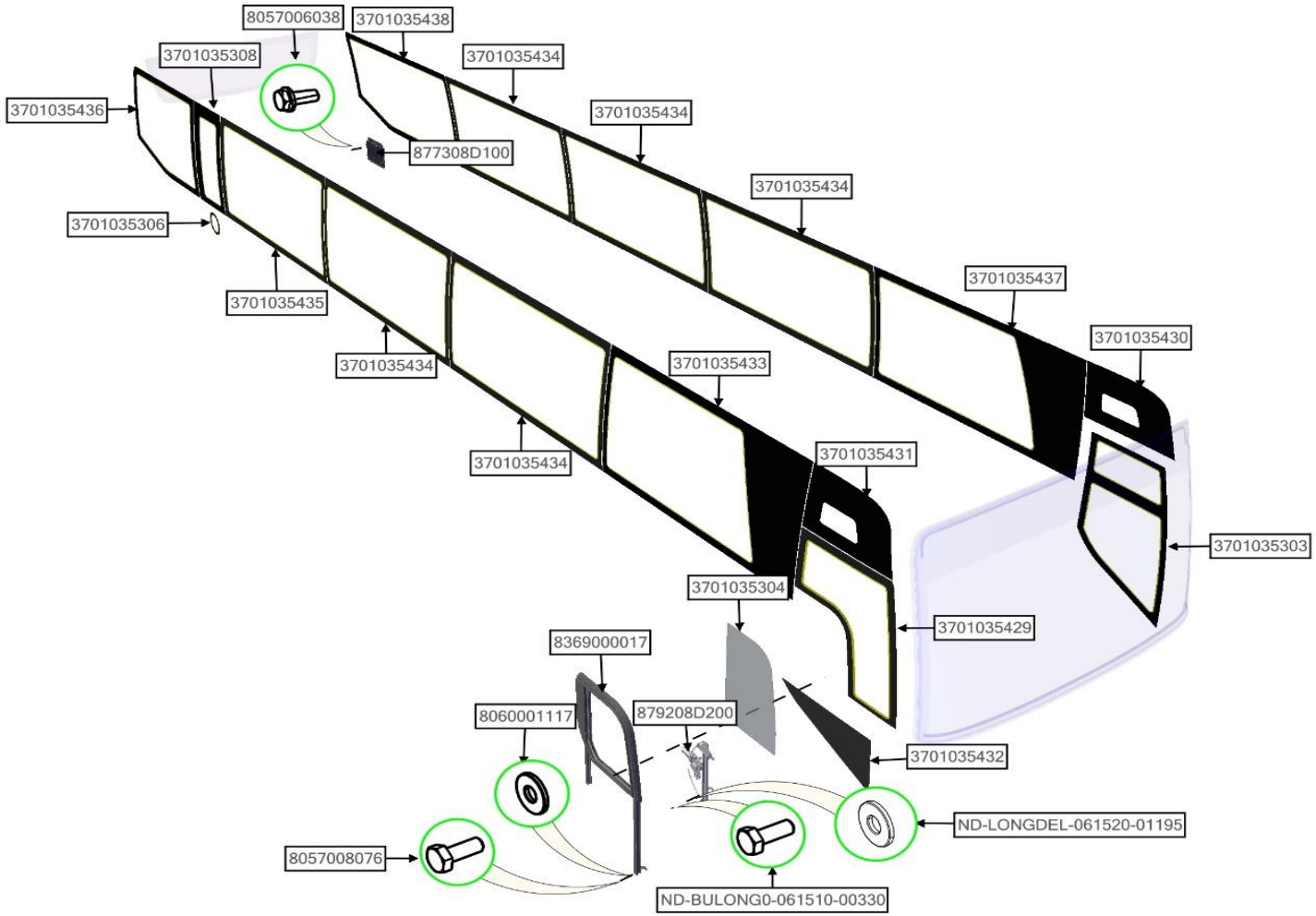


| ASSB_NAME | PART NO. | NAME | QTY |
|---|---|---|---|
| GLASS SIDE ASSY | 8369000017 | ALUMINUM FRAME DOOR | 1 |
| | 3701035437 | LH SIDE GLASS 01 | 1 |
| | 3701035433 | RH SIDE GLASS 01 | 1 |
| | 3701035438 | LH SIDE GLASS 02 | 1 |
| | 3701035436 | RH SIDE GLASS 04 | 1 |
| | 3701035435 | RH SIDE GLASS 03 | 1 |
| | 3701035303 | PASSENGER DOOR GLASS | 1 |

| ASSB_NAME | PART NO. | NAME | QTY |
|---|---|---|---|
| GLASS SIDE ASSY | 3701035429 | DRIVER DOOR GLASS | 1 |
| | 3701035432 | FIXED GLASS | 1 |
| | 3701035431 | RH FIXED GLASS | 1 |
| | 3701035430 | LH FIXED GLASS | 1 |
| | 3701035308 | EMERGENCY EXIT GLASS 01 | 1 |
| | 3701035306 | EMERGENCY EXIT GLASS 02 | 1 |
| | 879208D200 | MOTOR SLOW GLASS | 1 |

| ASSB_NAME | PART NO. | NAME | QTY |
|---|---|---|---|
| GLASS SIDE ASSY | 3701035304 | DRIVER SLOW GLASS | 1 |
| | 877308D100 | WIND FILTER | 1 |
| | 8057006038 | BOLT 06015100 | 1 |
| | 8057008076 | BOLT 08020125 | 2 |
| | 8060001117 | WASHER Ø08 | 2 |
| | 3701035434 | RH SIDE GLASS 02 | 5 |
| | ND-LONGDEL-061520-01195 | WASHER Ø06 | 7 |
| | ND-BULONG0-061510-00330 | BOLT 06015100 | 7 |

| ASSB_NAME | PART NO. | NAME | QTY |
|---|---|---|---|
| GLASS SIDE ASSY | | | |

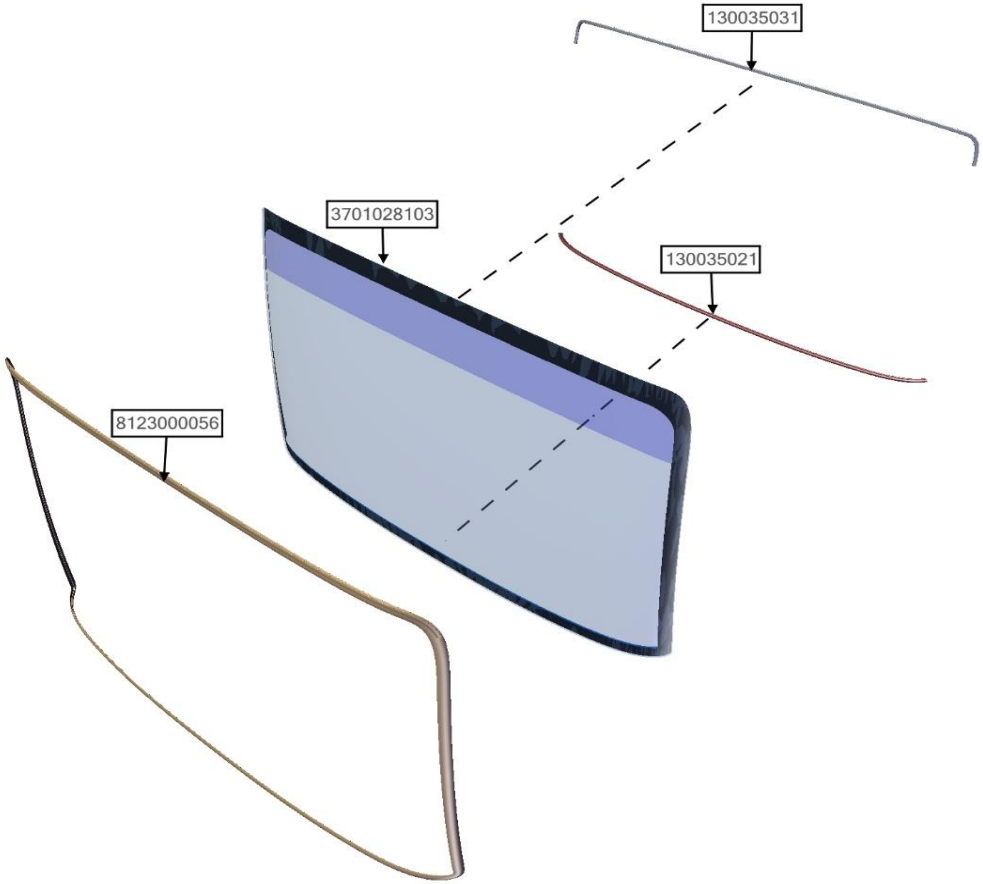


| ASSB_NAME | PART NO. | NAME | QTY |
|---|---|---|---|
| WIND GLASS | 130035031 | WEATHERSTRIP | 1 |
| | 130035021 | WEATHERSTRIP | 1 |
| | 8123000056 | WEATHERSTRIP | 1 |
| | 3701028103 | WIND GLASS | 1 |
| | | | |
| | | | |
| | | | |

| ASSB_NAME | PART NO. | NAME | QTY |
|---|---|---|---|
| WIND GLASS | | | |
| | | | |
| | | | |
| | | | |
| | | | |
| | | | |
| | | | |

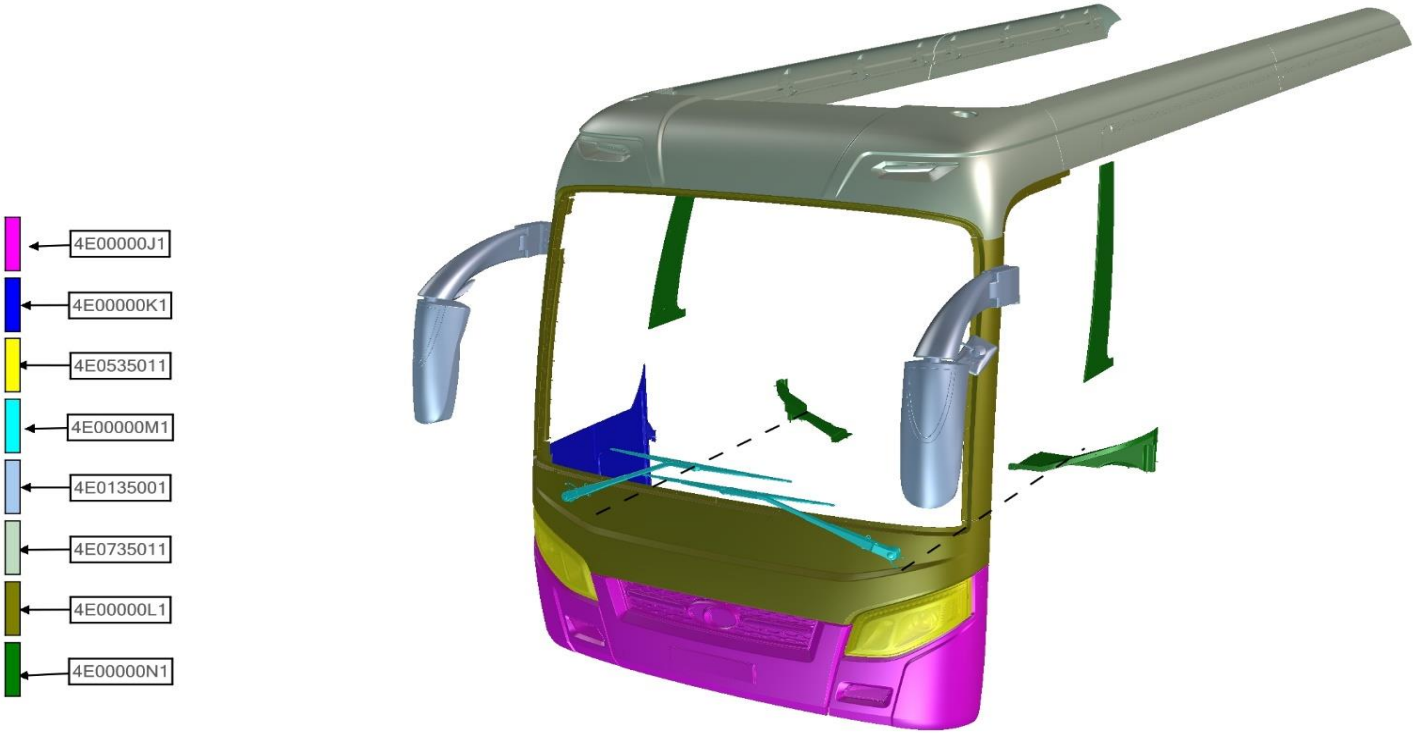


| ASSB_NAME | PART NO. | NAME | QTY |
|---|---|---|---|
| FRONT | 4E00000J1 | FRONT BUMPER | 1 |
| | 4E00000K1 | FLAP ASSY - FRT BODY | 1 |
| | 4E0535011 | LAMP FRONT - ASSY | 1 |
| | 4E00000M1 | WINDSHIELD WIPER - ASSY | 1 |
| | 4E0135001 | MIRROR ASSY - OUTSIDE | 1 |
| | 4E0735011 | SPOILER ASSY | 1 |
| | 4E00000L1 | FRONT MIDDLE PANEL - ASSY | 1 |

| ASSB_NAME | PART NO. | NAME | QTY |
|---|---|---|---|
| FRONT | 4E00000N1 | COVER ASSY | |
| | | | |
| | | | |
| | | | |
| | | | |
| | | | |
| | | | |

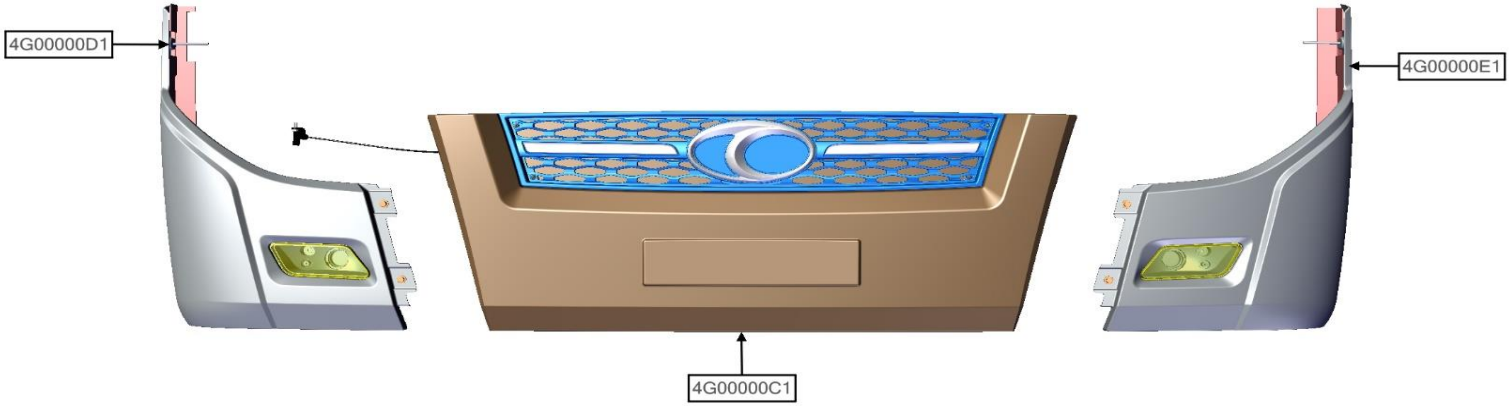


| ASSB_NAME | PART NO. | NAME | QTY |
|---|---|---|---|
| FRONT BUMPER ASSY | 4G00000C1 | FRONT MIDDLE BUMPER | 1 |
| | 4G00000E1 | BUMPER ASSY-FR,CORNER,LH | 1 |
| | 4G00000D1 | BUMPER ASSY-FR,CORNER,RH | 1 |
| | | | |
| | | | |
| | | | |
| | | | |

| ASSB_NAME | PART NO. | NAME | QTY |
|---|---|---|---|
| FRONT BUMPER ASSY | | | |
| | | | |
| | | | |
| | | | |
| | | | |
| | | | |
| | | | |

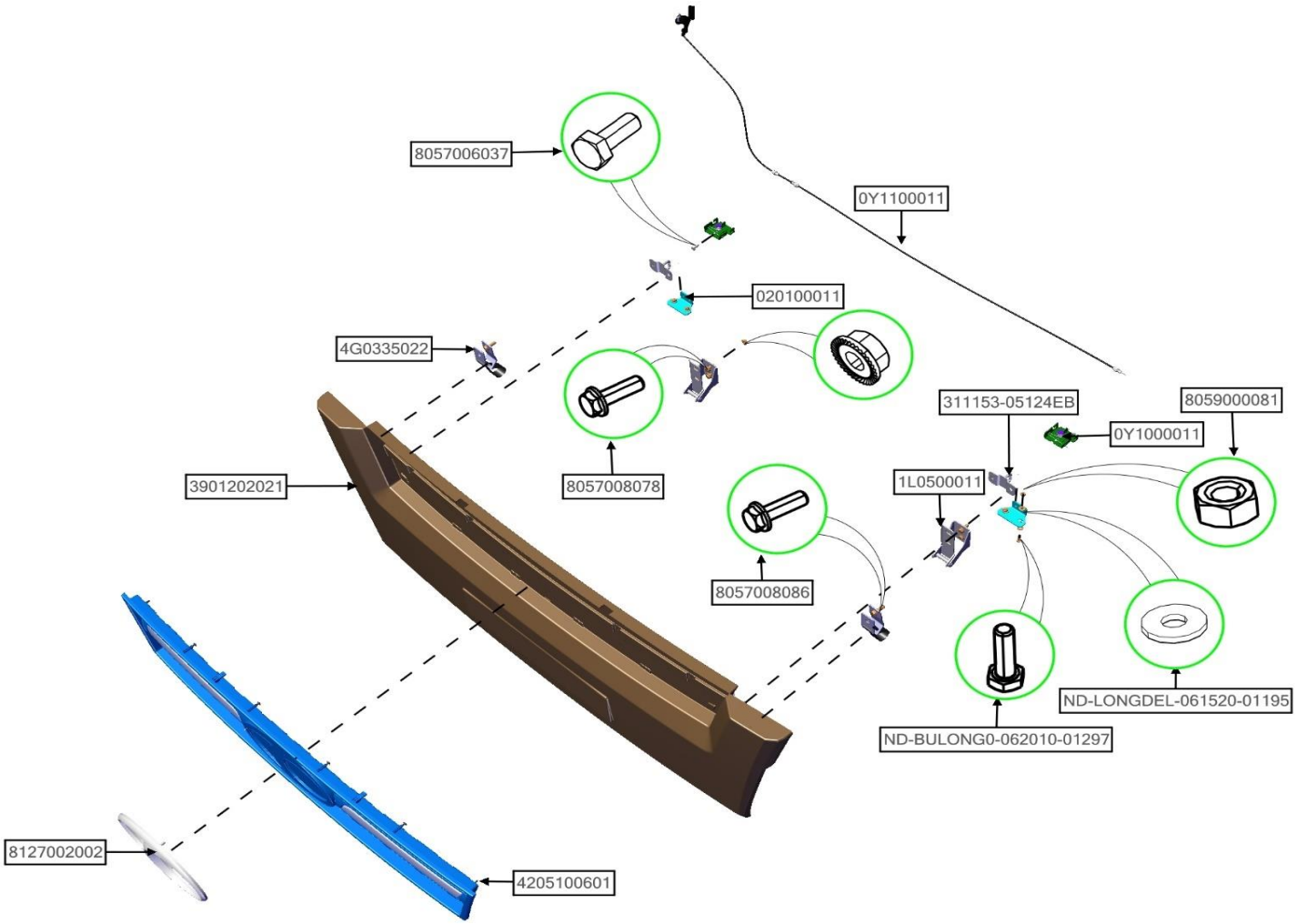


| ASSB_NAME | PART NO. | NAME | QTY |
|---|---|---|---|
| FRONT MIDDLE BUMPER | 4205100601 | GARNISH ASSY-FR | 4 |
| | 8057006037 | BOLT 06015100 | 4 |
| | ND-BULONG0-062010-01297 | BOLT 06020100 | 6 |
| | 8059000081 | NUT 06100 | 2 |
| | ND-LONGDEL-061520-01195 | WASHER Ø06 | 1 |
| | 8127002002 | LOGO | 2 |
| | 8057008086 | BOLT 08025125 | 1 |
| | 8057008078 | BOLT 08020125 | 1 |

| ASSB_NAME | PART NO. | NAME | QTY |
|---|---|---|---|
| FRONT MIDDLE BUMPER | 3901202021 | FRONT MIDDLE BUMPER | 1 |
| | 0Y1100011 | CABLE CATCH RELEASE | 1 |
| | 020100011 | BRACKET | 2 |
| | 0Y1000011 | LATCH | 2 |
| | 4G0335022 | BELT | 2 |
| | 1L0500011 | HINGE | 2 |
| | 311153-05124EB | STRIKER | 2 |
| | | | |

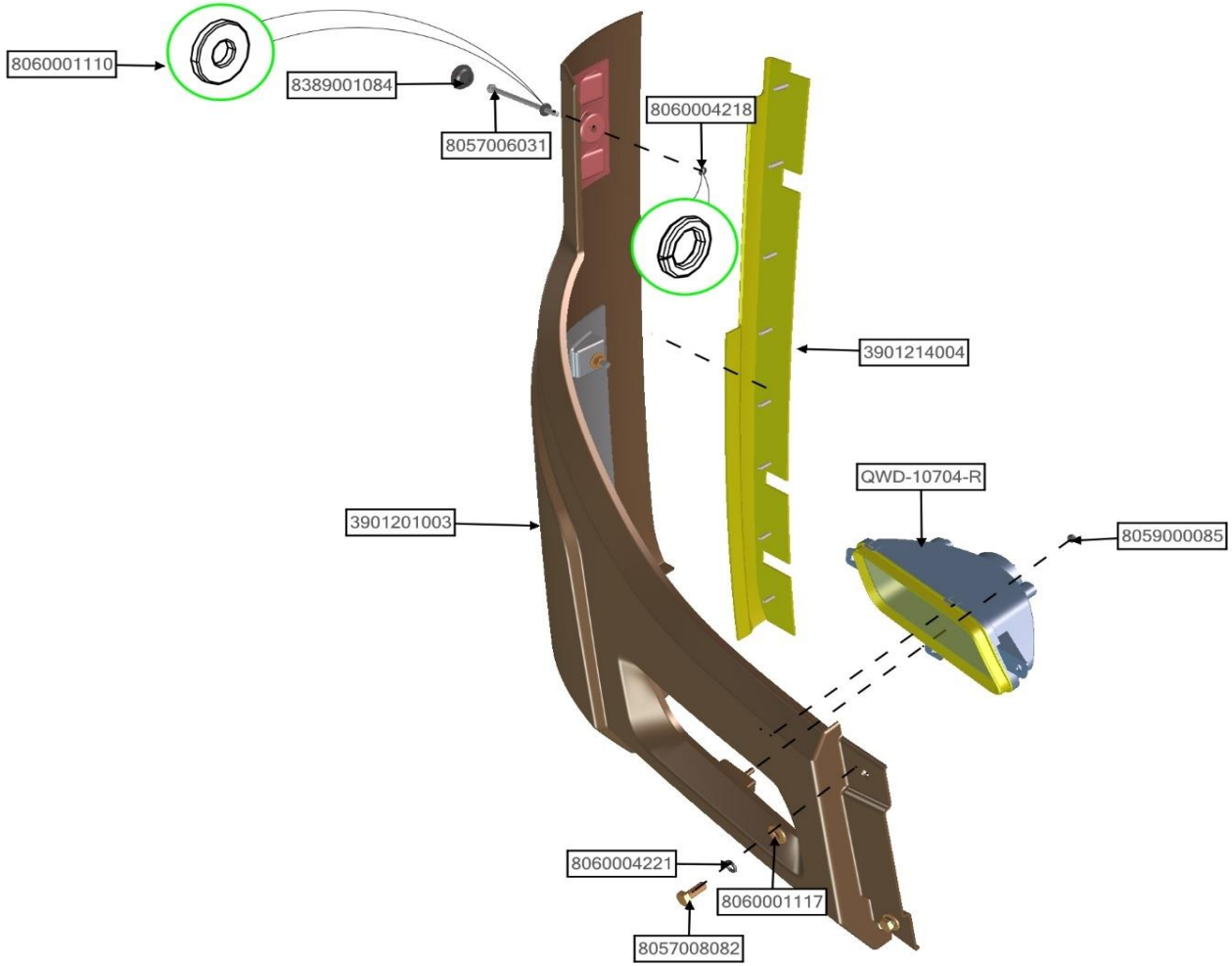


| ASSB_NAME | PART NO. | NAME | QTY |
|---|---|---|---|
| BUMPER ASSY-FR,CORNER,RH | 8057006031 | BOLT 06100100 | 1 |
| | 8057008082 | BOLT 08020125 | 1 |
| | 8389001084 | COVER | 1 |
| | 3901201003 | FRONT BUMPER SIDE RH | 1 |
| | 8060001110 | WASHER Ø06 | 1 |
| | 8060001117 | WASHER Ø08 | 1 |
| | 8059000085 | NUT 06100 | 1 |

| ASSB_NAME | PART NO. | NAME | QTY |
|---|---|---|---|
| BUMPER ASSY-FR,CORNER,RH | QWD-10704-R | LAMP BUMPER FRONT RH | 1 |
| | 8060004218 | SPLIT WASHER Ø06 | 1 |
| | 8060004221 | SPLIT WASHER Ø08 | 1 |
| | 3901214004 | FRONT PILLAR PANEL RH | 1 |
| | | | |
| | | | |
| | | | |

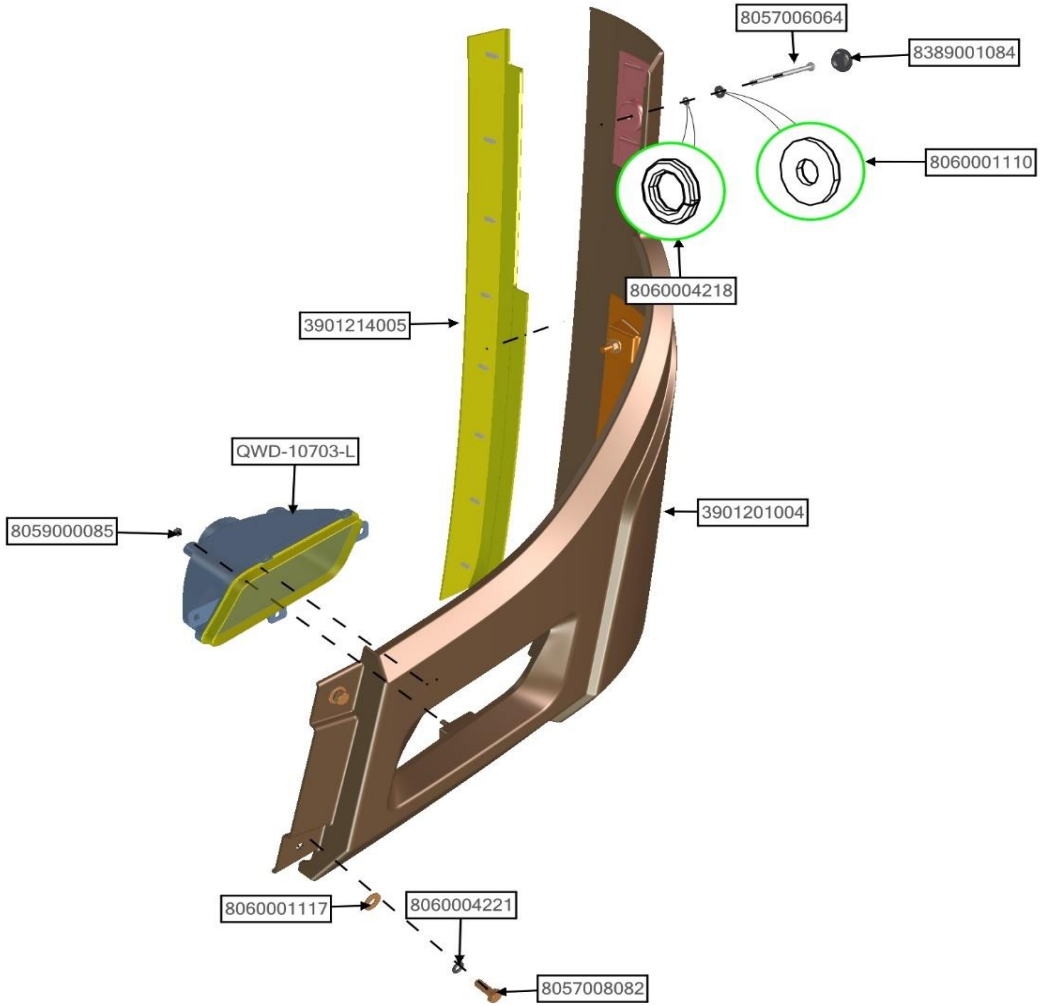


| ASSB_NAME | PART NO | NAME | QTY |
|---|---|---|---|
| BUMPER ASSY-FR,CORNER,LH | 8057006064 | BOLT 06100100 | 1 |
| | 8057008082 | BOLT 08025125 | 1 |
| | 8389001084 | COVER | 1 |
| | 3901201004 | FRONT BUMPER SIDE LH | 1 |
| | 8071000078 | SCREW 0520 | 1 |
| | 8060001110 | WASHER Ø06 | 1 |
| | 8060001117 | WASHER Ø08 | 1 |

| ASSB_NAME | PART NO. | NAME | QTY |
|---|---|---|---|
| BUMPER ASSY-FR,CORNER,LH | 8059000085 | NUT 06100 | 1 |
| | QWD-10703-L | LAMP BUMPER FRONT LH | 1 |
| | 8060004218 | SPLIT WASHER Ø06 | 1 |
| | 8060004221 | SPLIT WASHER Ø08 | 1 |
| | 3901214005 | FRONT PILLAR PANEL LH | 1 |
| | | | |
| | | | |

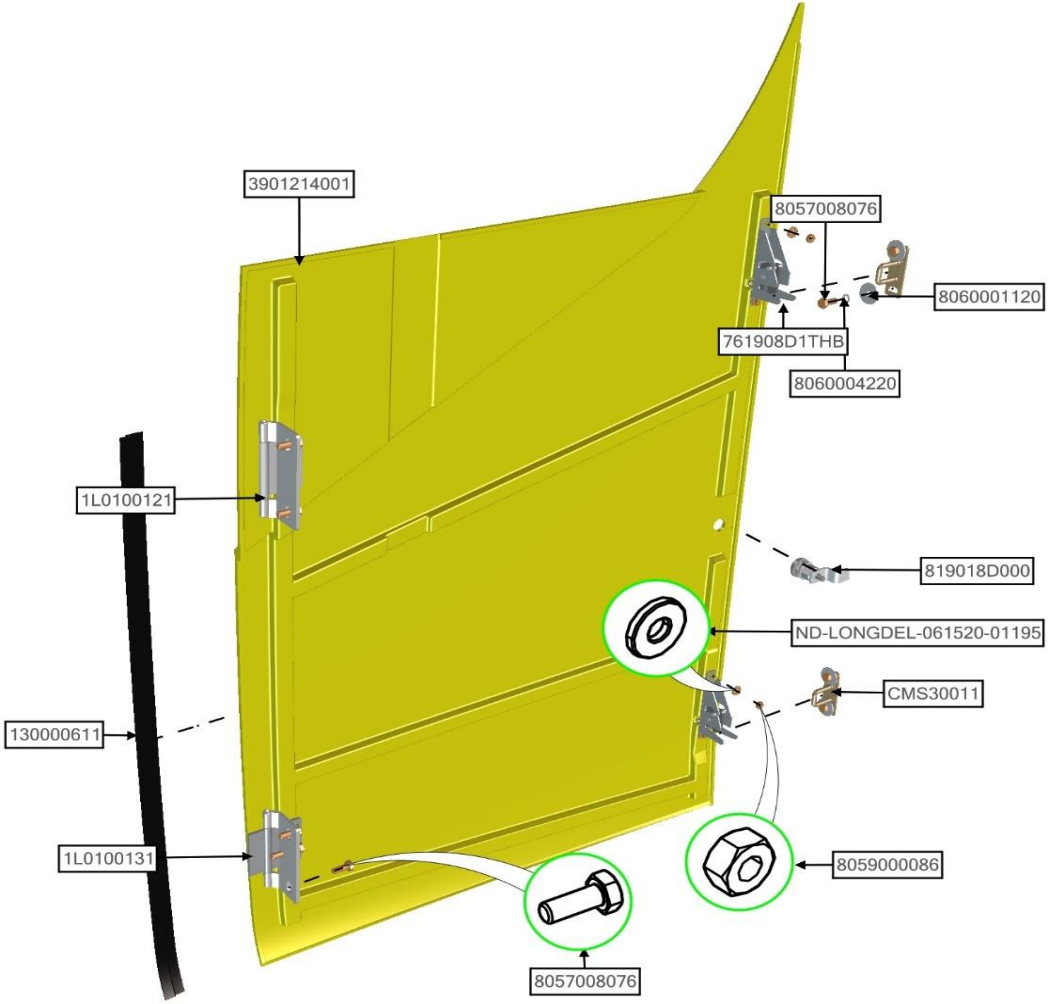


| ASSB_NAME | PART NO. | NAME | QTY |
|---|---|---|---|
| FLAP ASSY - FRT BODY | 8057008076 | BOLT 08020125 | 1 |
| | 3901214001 | FLAP FRONT | 1 |
| | 761908D1THB | LOCK FLAP FRONT | 2 |
| | 1L0100121 | HINGE | 1 |
| | 1L0100131 | HINGE | 1 |
| | CMS30011 | STRIKER | 2 |
| | 130000611 | WEATHERSTRIP | 1 |

| ASSB_NAME | PART NO. | NAME | QTY |
|---|---|---|---|
| FLAP ASSY - FRT BODY | ND-LONGDEL-061520-01195 | WASHER Ø06 | 1 |
| | 8060001120 | WASHER Ø08 | 1 |
| | 8059000086 | NUT 06100 | 1 |
| | 8060004220 | SPLIT WASHER Ø08 | 1 |
| | 819018D000 | LOCK | 1 |
| | | | |
| | | | |

| ASSB_NAME | PART NO. | NAME | QTY |
|---|---|---|---|
| LAMP FRONT - ASSY | 51310202124 | LAMP ASSY- HEAD RH | 1 |
| | 51310102124 | LAMP ASSY- HEAD LH | 1 |
| | | | |
| | | | |
| | | | |
| | | | |
| | | | |

| ASSB_NAME | PART NO. | NAME | QTY |
|---|---|---|---|
| LAMP FRONT - ASSY | | | |
| | | | |
| | | | |
| | | | |
| | | | |
| | | | |
| | | | |

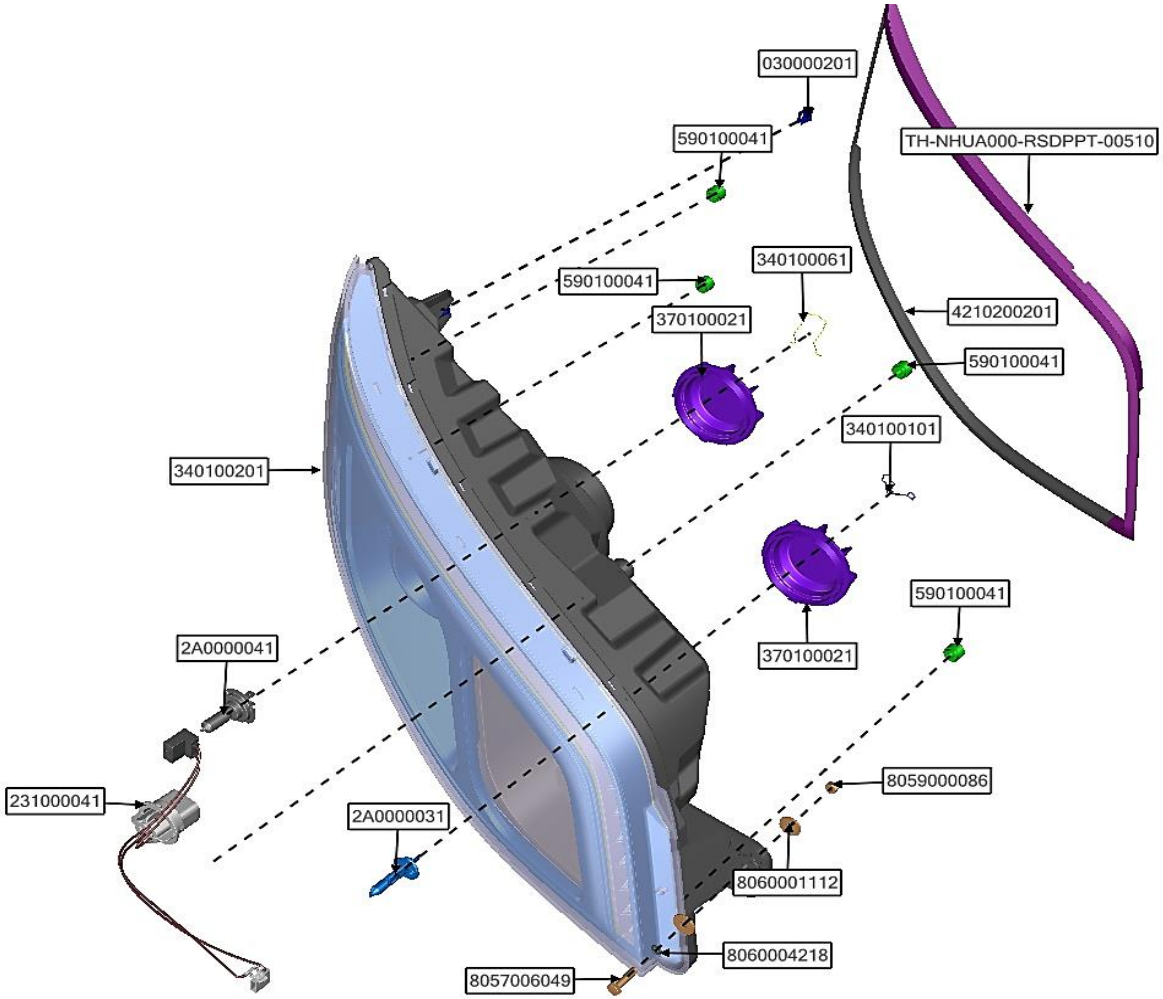


| ASSB_NAME | PART NO. | NAME | QTY |
|---|---|---|---|
| LAMP RH FRONT | 2A0000031 | BULB | 1 |
| | 2A0000041 | BULB | 1 |
| | 030000201 | CLIP | 1 |
| | 231000041 | WIRING ASSY | 1 |
| | 340100061 | CLAMP BULD | 1 |
| | 340100101 | CLAMP BULD | 1 |
| | 340100201 | COVER LAMP RH | 1 |
| | 370100021 | COVER DUST | 2 |

| ASSB_NAME | PART NO. | NAME | QTY |
|---|---|---|---|
| LAMP RH FRONT | 590100041 | RETAINER | 4 |
| | 4210200201 | WEATHERSTRIP | 1 |
| | 8057006049 | BOLT | 1 |
| | 8059000086 | NUT 06100 | 1 |
| | 8060001112 | WASHER Ø06 | 1 |
| | 8060004218 | SPLIT WASHER Ø06 | 1 |
| | TH-NHUA000-RSDPPT-00510 | WEATHERSTRIP | 1 |
| | | | |

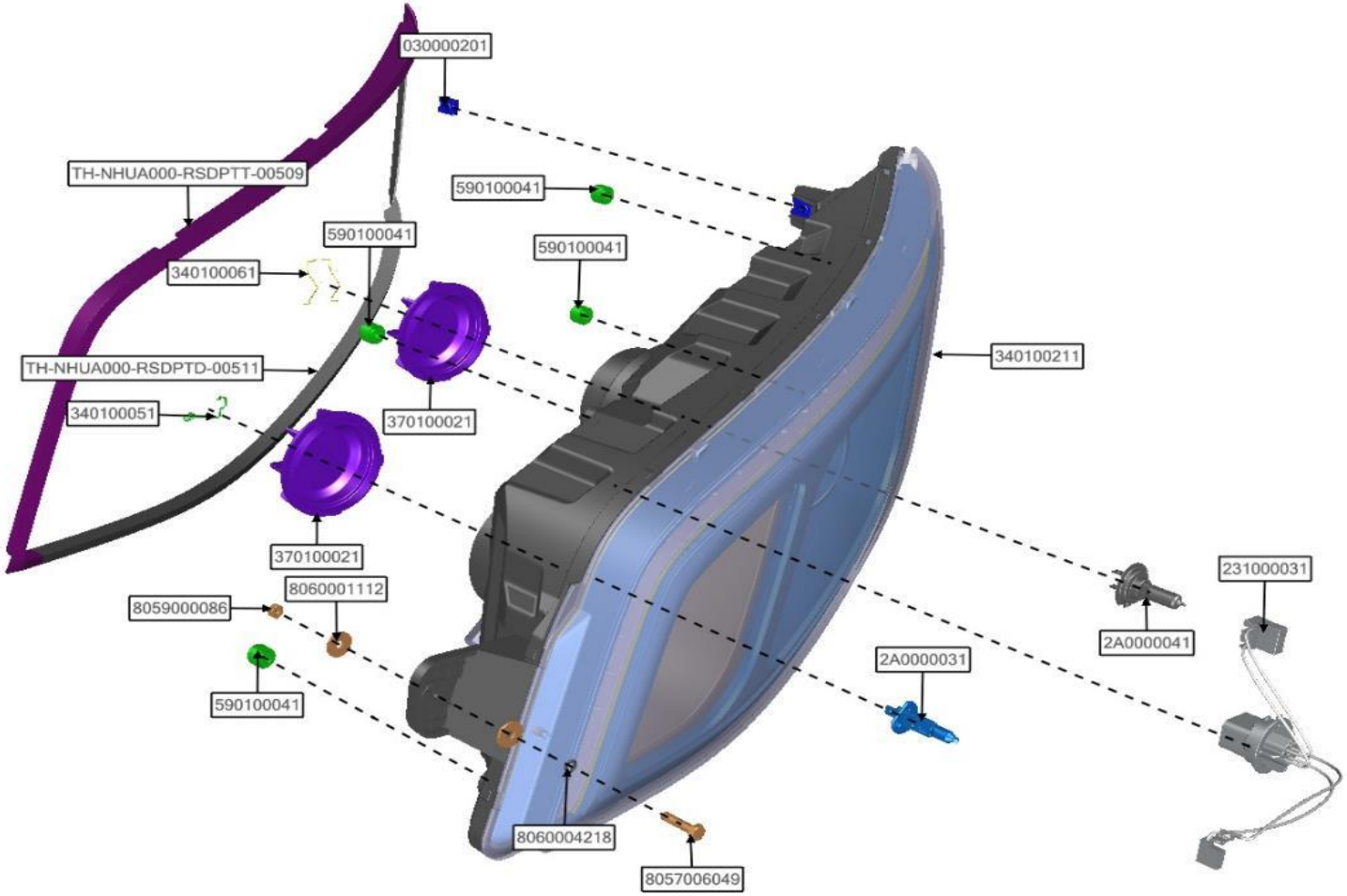


| ASSB_NAME | PART NO. | NAME | QTY |
|---|---|---|---|
| LAMP LH FRONT | 2A0000031 | BULB | 1 |
| | 2A0000041 | BULB | 1 |
| | 030000201 | CLIP | 1 |
| | 231000031 | WIRING ASSY | 1 |
| | 340100051 | CLAMP BULD | 1 |
| | 340100061 | CLAMP BULD | 1 |
| | 340100211 | COVER LAMP LH | 1 |
| | 370100021 | COVER DUST | 2 |

| ASSB_NAME | PART NO. | NAME | QTY |
|---|---|---|---|
| LAMP LH FRONT | 590100041 | RETAINER | 4 |
| | 8057006049 | BOLT | 1 |
| | 8059000086 | NUT 06100 | 1 |
| | 8060001112 | WASHER Ø08 | 1 |
| | 8060004218 | SPLIT WASHER Ø06 | 1 |
| | TH-NHUA000-RSDPTD-00511 | WEATHERSTRIP | 1 |
| | TH-NHUA000-RSDPTT-00509 | WEATHERSTRIP | 1 |
| | | | |

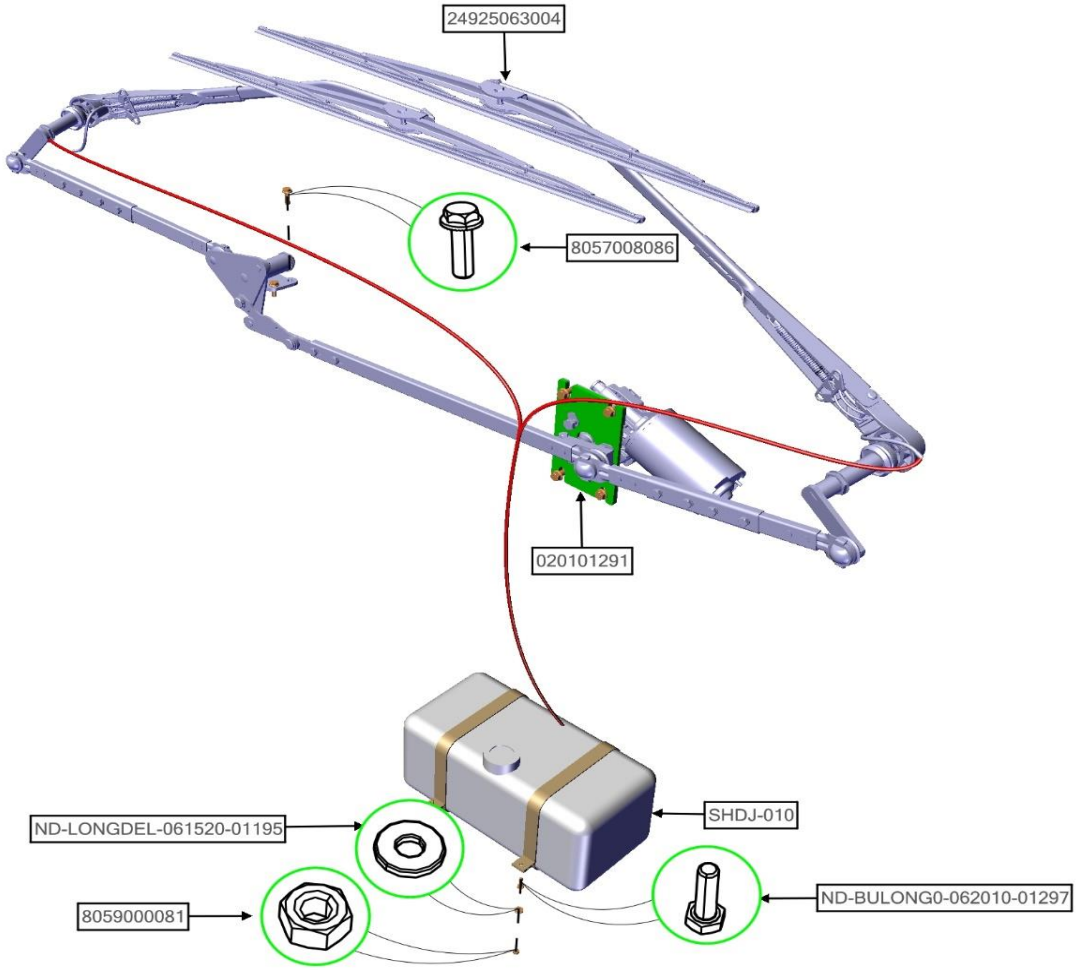


| ASSB_NAME | PART NO. | NAME | QTY |
|---|---|---|---|
| WINDSHIELD WIPER - ASSY | 8059000081 | NUT 06100 | 2 |
| | ND-LONGDEL-061520-01195 | WASHER Ø06 | 2 |
| | 020101291 | BRACKET | 1 |
| | 24925063004 | WINDSHIELD WIPER | 1 |
| | SHDJ-010 | RESEVOIR -FR | 1 |
| | 8057010075 | BOLT 10025125 | 5 |
| | 8057008086 | BOLT 08025125 | 4 |

| ASSB_NAME | PART NO. | NAME | QTY |
|---|---|---|---|
| | ND-BULONG0-062010-01297 | BOLT 06020100 | 2 |
| | | | |
| | | | |
| | | | |
| | | | |
| | | | |
| | | | |

| ASSB_NAME | PART NO. | NAME | QTY |
|---|---|---|---|
| MIRROR ASSY - OUTSIDE | 876118D550SE | MIRROR - OUTSIDE | 1 |
| | ND-BULONG0-053512-00338 | BOLT 08035125 | 12 |
| | | | |
| | | | |
| | | | |
| | | | |
| | | | |

| ASSB_NAME | PART NO. | NAME | QTY |
|---|---|---|---|
| MIRROR ASSY - OUTSIDE | | | |
| | | | |
| | | | |
| | | | |
| | | | |
| | | | |
| | | | |

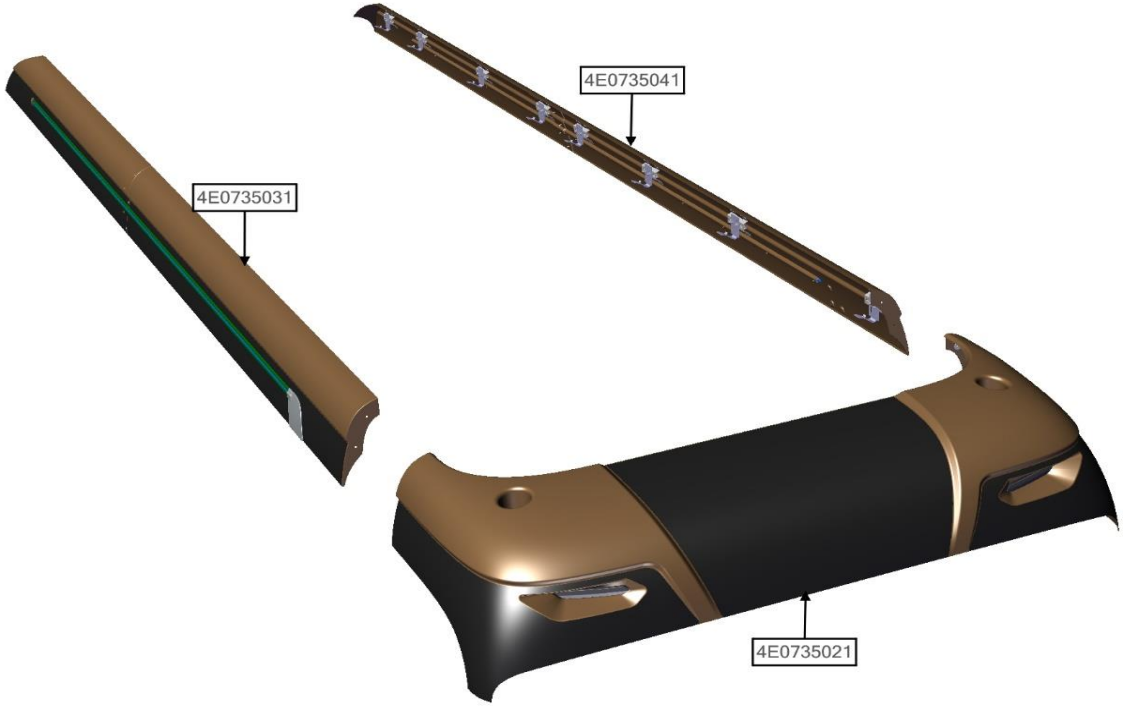


| ASSB_NAME | PART NO. | NAME | QTY |
|---|---|---|---|
| SPOILER ASSY | 4E0735021 | FRONT SPOLIER - ASSY | 1 |
| | 4E0735041 | FRONT SPOLIER - ASSY - LH | 1 |
| | 4E0735031 | FRONT SPOLIER - ASSY - RH | 1 |
| | | | |
| | | | |
| | | | |
| | | | |

| ASSB_NAME | PART NO. | NAME | QTY |
|---|---|---|---|
| SPOILER ASSY | | | |
| | | | |
| | | | |
| | | | |
| | | | |
| | | | |
| | | | |

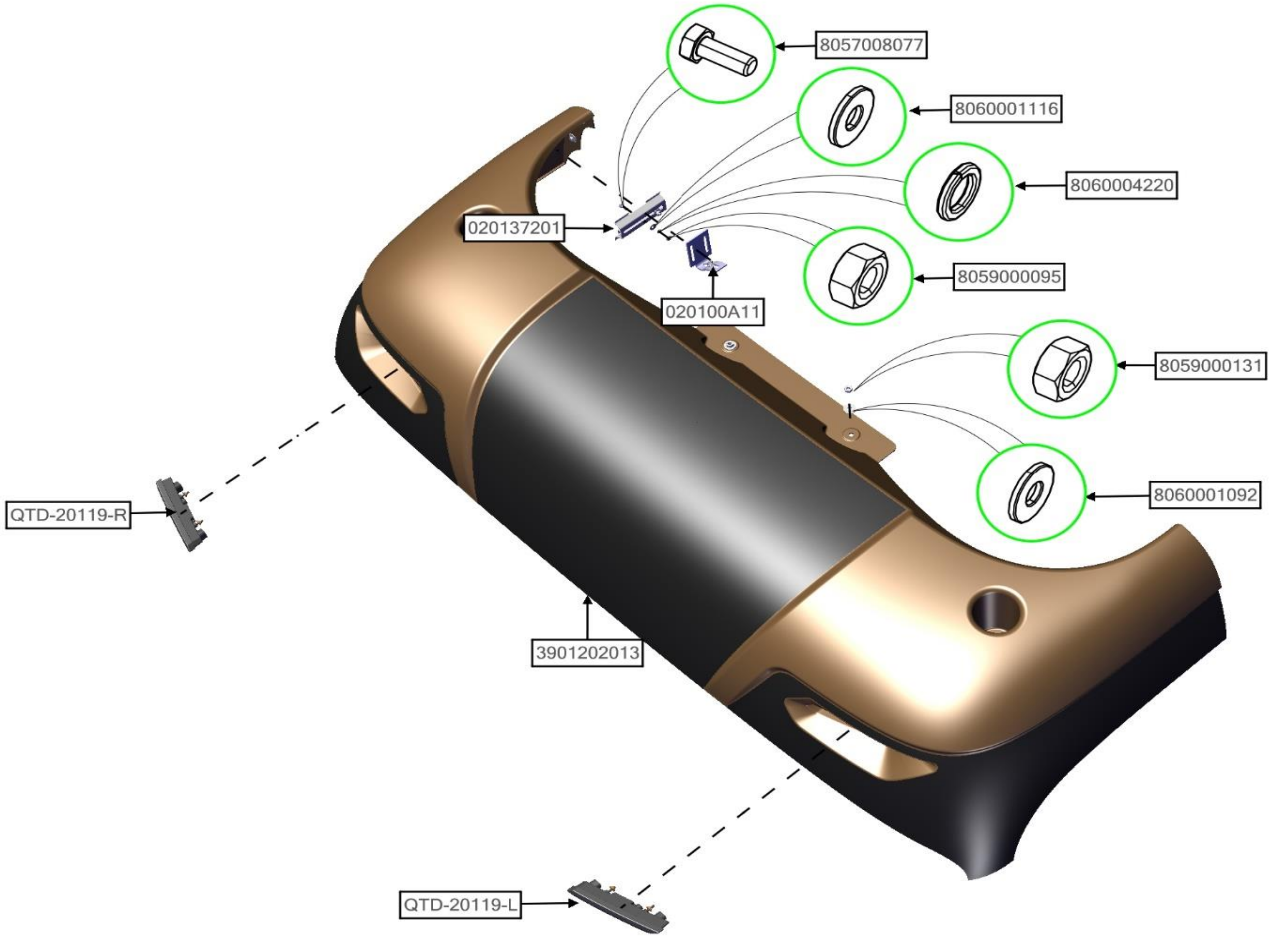


| ASSB_NAME | PART NO. | NAME | QTY |
|---|---|---|---|
| FRONT SPOLIER - ASSY | 8060004220 | WASHER Ø08 | 6 |
| | QTD-20119-L | LH SPOLIER FRONT LAMP | 1 |
| | QTD-20119-R | RH SPOLIER FRONT LAMP | 1 |
| | 8059000131 | NUT 10150 | 4 |
| | 8059000095 | NUT 08125 | 10 |
| | 8060001092 | WASHER Ø10 | 4 |
| | 8060001116 | WASHER Ø08 | 1 |

| ASSB_NAME | PART NO. | NAME | QTY |
|---|---|---|---|
| FRONT SPOLIER - ASSY | 020137201 | BRACKET | 1 |
| | 020100A11 | BRACKET | 1 |
| | 3901202013 | FRONT SPOILER | 1 |
| | 8057008077 | BOLT 08020125 | 8 |
| | | | |
| | | | |
| | | | |

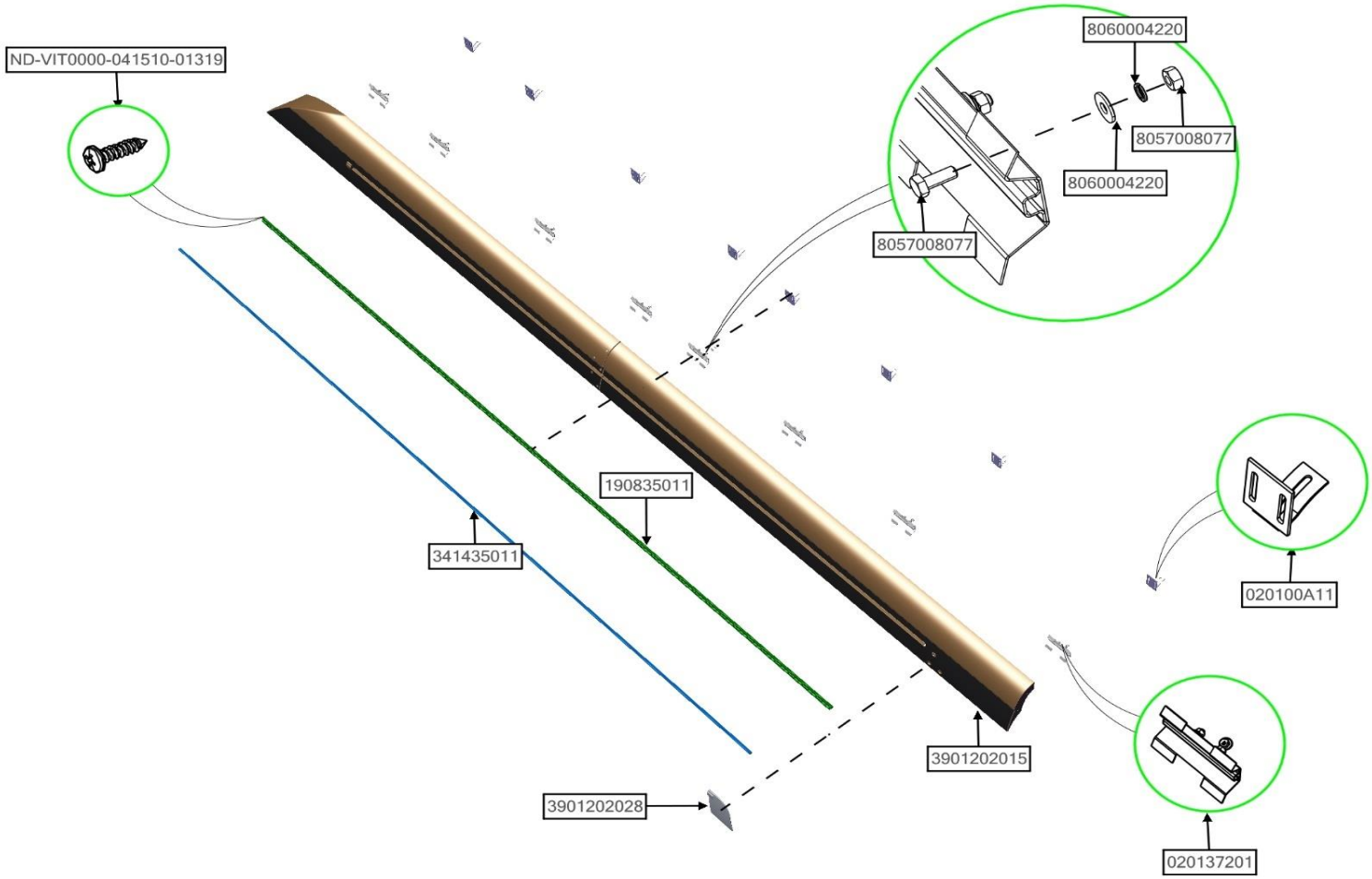


| ASSB_NAME | PART NO. | NAME | QTY |
|---|---|---|---|
| FRONT SPOLIER - ASSY - RH | 3901202028 | COVER | 1 |
| | 8060004220 | SPLIT WASHER Ø08 | 24 |
| | 8059000095 | NUT 08125 | 24 |
| | 8060001116 | WASHER Ø08 | 1 |
| | ND-VIT0000-041510-01319 | SCREW 0415 | 13 |
| | 020137201 | BRACKET | 8 |
| | 020100A11 | BRACKET | 8 |

| ASSB_NAME | PART NO. | NAME | QTY |
|---|---|---|---|
| FRONT SPOLIER - ASSY - RH | 190835011 | ALUMINIUM SPLINT | 1 |
| | 3901202015 | FRONT SPOLIER - RH | 1 |
| | 341435011 | LED LIGHT | 1 |
| | 8057008077 | BOLT 08020125 | 16 |
| | | | |
| | | | |
| | | | |

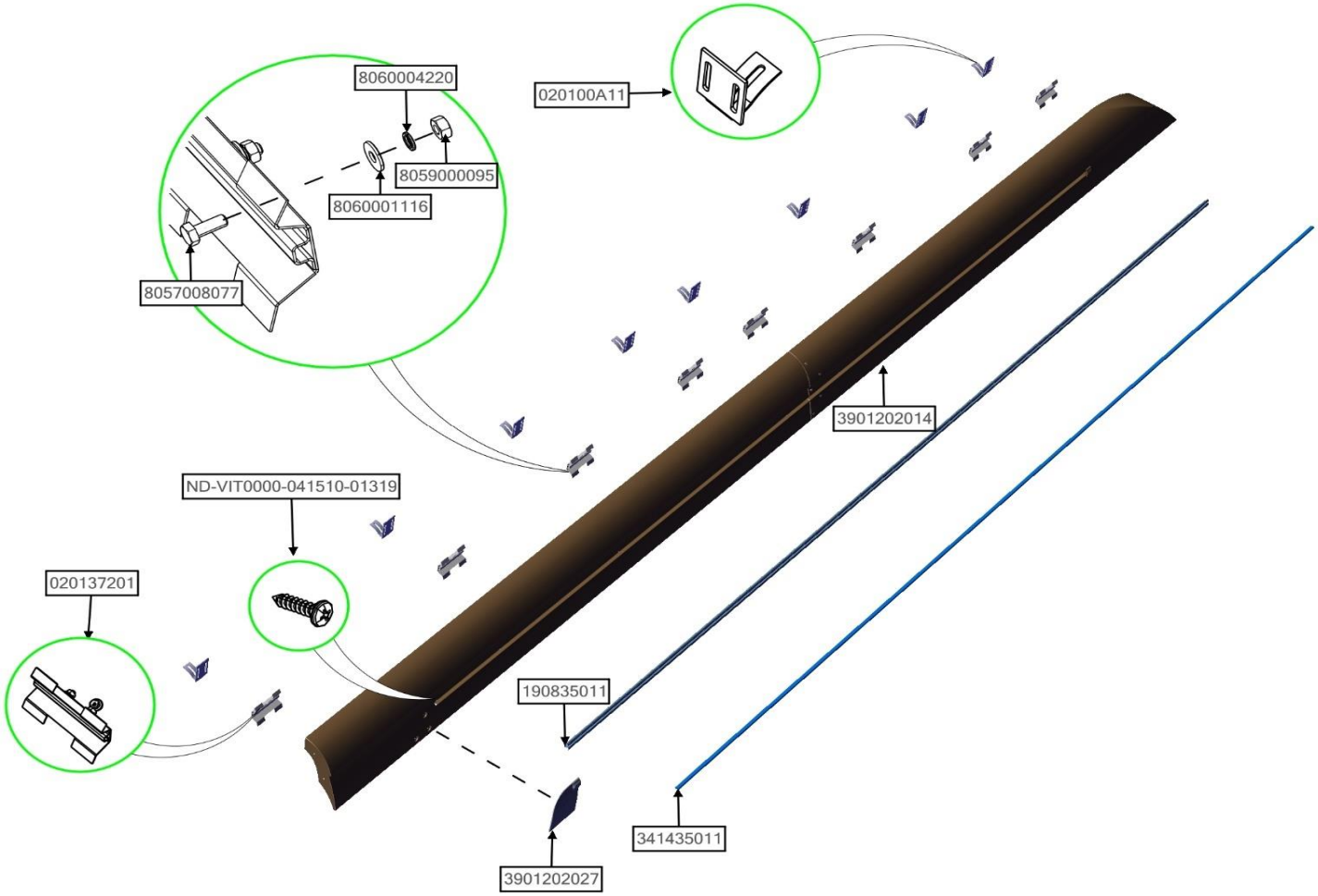


| ASSB_NAME | PART NO. | NAME | QTY |
|---|---|---|---|
| FRONT SPOLIER - ASSY - LH | 8057008077 | BOLT 08020125 | 16 |
| | 341435011 | LED LIGHT | 1 |
| | 3901202014 | FRONT SPOLIER - LH | 1 |
| | 190835011 | ALUMINIUM SPLINT | 1 |
| | 020100A11 | BRACKET | 8 |
| | 020137201 | BRACKET | 8 |
| | ND-VIT0000-041510-01319 | SCREW 0415 | 13 |

| ASSB_NAME | PART NO. | NAME | QTY |
|---|---|---|---|
| FRONT SPOLIER - ASSY - LH | 8059000095 | NUT 08125 | 24 |
| | 8060004220 | SPLIT WASHER Ø08 | 24 |
| | 3901202027 | COVER | 1 |
| | | | |
| | | | |
| | | | |
| | | | |

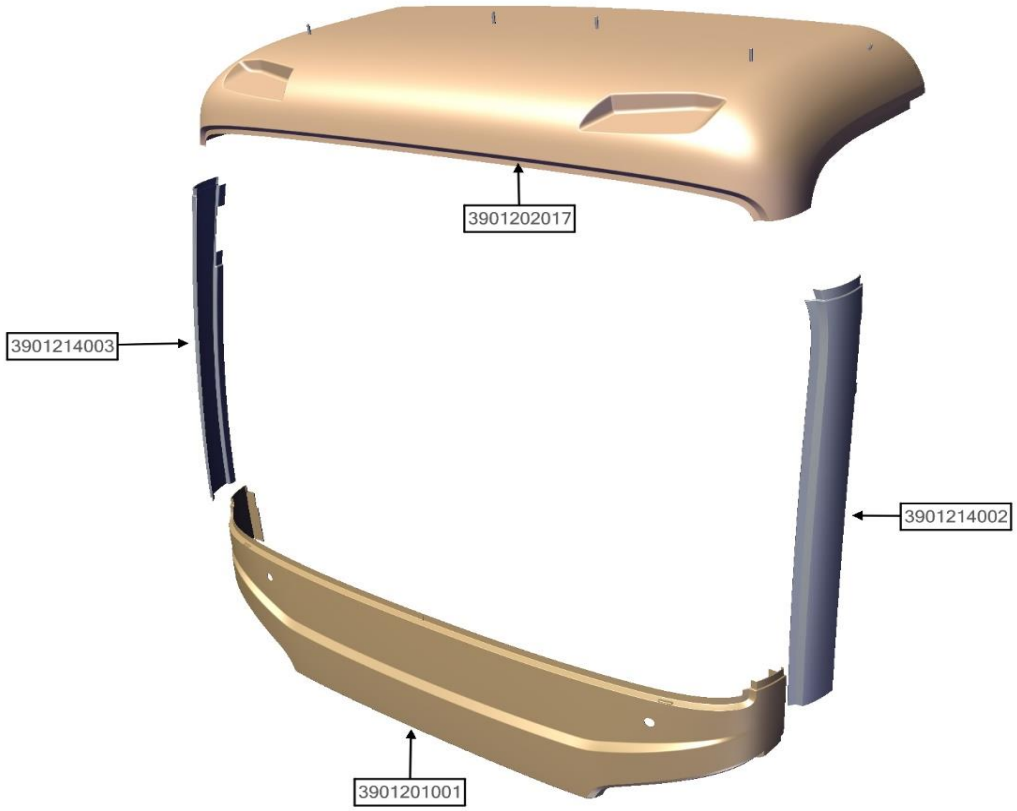


| ASSB_NAME | PART NO. | NAME | QTY |
|---|---|---|---|
| FRONT MIDDLE PANEL - ASSY | 3901202017 | FRONT ROOF PANEL | 1 |
| | 3901201001 | FRONT MIDDLE PANEL | 1 |
| | 3901214002 | FRONT PILLAR LH | 1 |
| | 3901214003 | FRONT PILLAR RH | 1 |
| | | | |
| | | | |
| | | | |

| ASSB_NAME | PART NO. | NAME | QTY |
|---|---|---|---|
| FRONT MIDDLE PANEL - ASSY | | | |
| | | | |
| | | | |
| | | | |
| | | | |
| | | | |
| | | | |

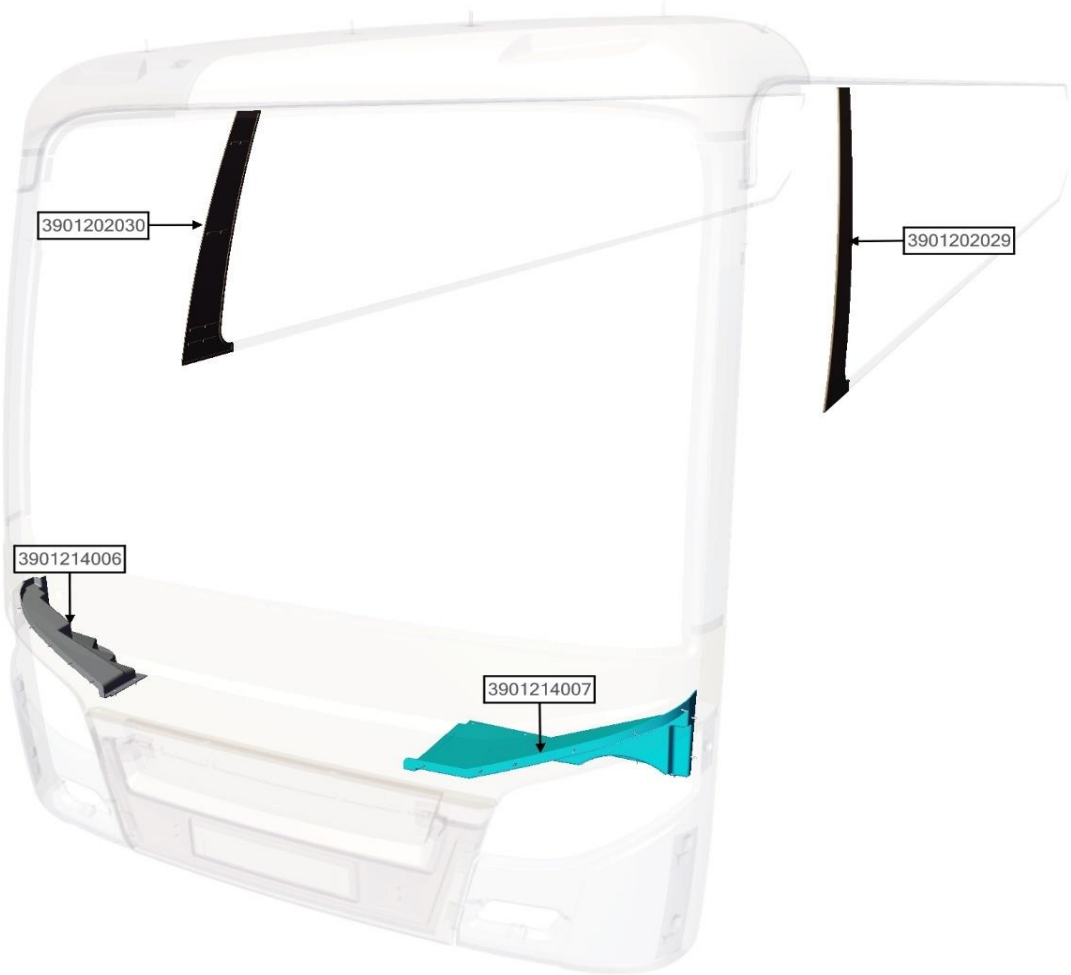


| ASSB_NAME | PART NO. | NAME | QTY |
|---|---|---|---|
| COVER ASSY | 3901202030 | PANEL RH | 1 |
| | 3901202029 | PANEL LH | 1 |
| | 3901214007 | LAMP COVER LH | 1 |
| | 3901214006 | LAMP COVER RH | 1 |
| | | | |
| | | | |
| | | | |

| ASSB_NAME | PART NO. | NAME | QTY |
|---|---|---|---|
| COVER ASSY | | | |
| | | | |
| | | | |
| | | | |
| | | | |
| | | | |
| | | | |

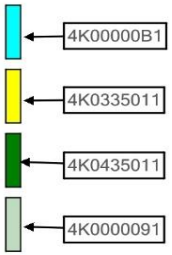

| ASSB_NAME | PART NO. | NAME | QTY |
|---|---|---|---|
| REAR | 4K0000091 | REAR PANEL - ASSY | 1 |
| | 4K00000B1 | REAR BUMPER - ASSY | 1 |
| | 4K0335011 | REAR LAMP - ASSY | 1 |
| | 4K0435011 | REAR SPOILER - ASSY | 1 |
| | | | |
| | | | |
| | | | |

| ASSB_NAME | PART NO. | NAME | QTY |
|---|---|---|---|
| COVER ASSY | | | |
| | | | |
| | | | |
| | | | |
| | | | |
| | | | |
| | | | |

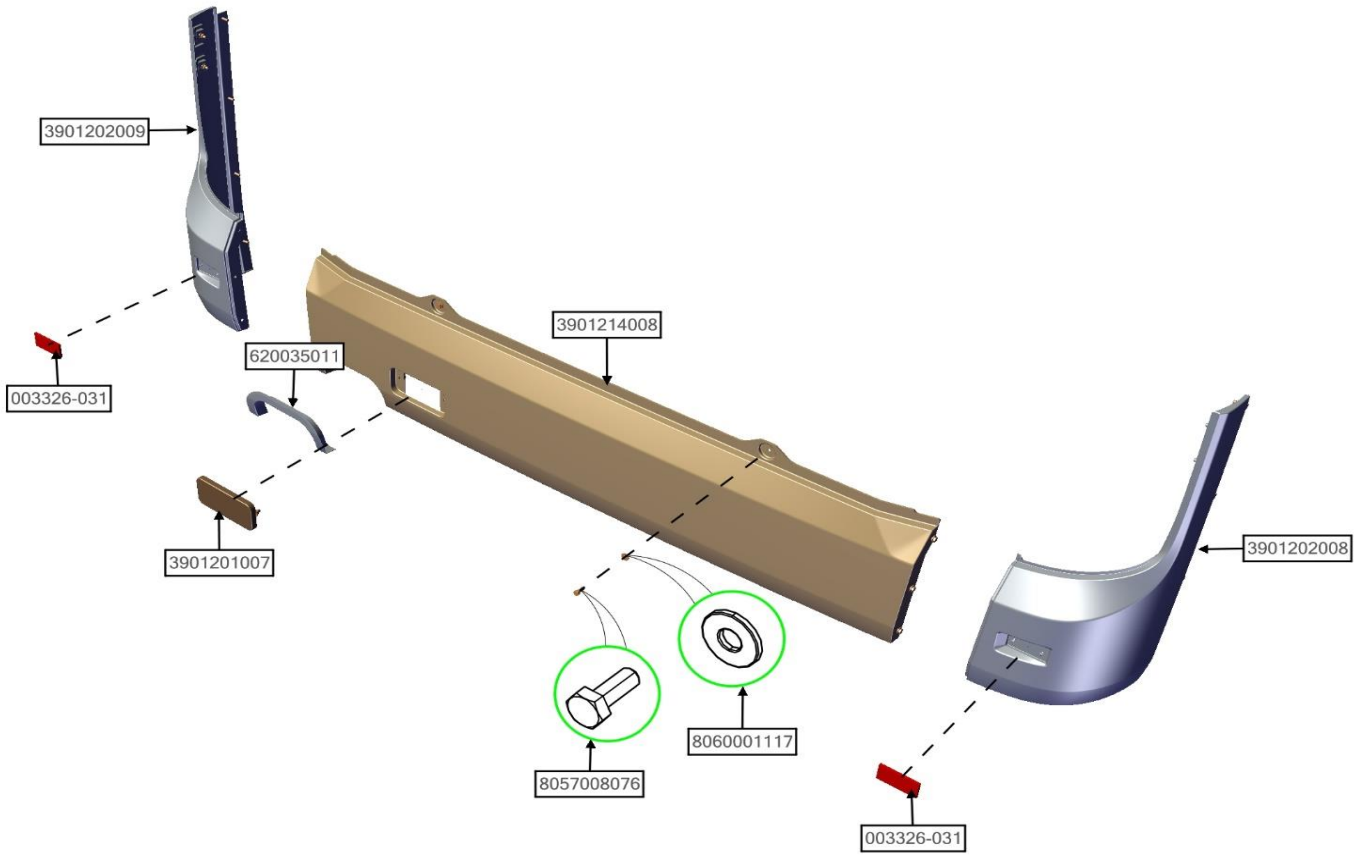


| ASSB_NAME | PART NO. | NAME | QTY |
|---|---|---|---|
| REAR BUMPER - ASSY | 8057008076 | TOWING HOOK | 1 |
| | 620012011 | REAR MIDDLE BUMPER | 1 |
| | 3901213006 | COVER | 1 |
| | 3901204033 | WASHER Ø08 | 1 |
| | 3901204032 | BUMPER ASSY-RR,CORNER,RH | 1 |
| | 3901204017 | BUMPER ASSY-RR,CORNER,LH | 1 |
| | 2E0000011 | BOLT 08020125 | 1 |

| ASSB_NAME | PART NO. | NAME | QTY |
|---|---|---|---|
| REAR BUMPER - ASSY | 003326-031 | RETRO-REFLECTIVE SHEETING | 2 |
| | | | |
| | | | |
| | | | |
| | | | |
| | | | |
| | | | |

| NAME_ASSB | CODE_PART NO | NAME | QTY |
|---|---|---|---|
| REAR LAMP--ASSY | 340200091 | REAR LAMP LH - ASSY | 1 |
| | 340200111 | REAR LAMP RH - ASSY | 1 |
| | | | |
| | | | |
| | | | |
| | | | |
| | | | |

| NAME_ASSB | CODE_PART NO | NAME | QTY |
|---|---|---|---|
| REAR LAMP--ASSY | | | |
| | | | |
| | | | |
| | | | |
| | | | |
| | | | |
| | | | |

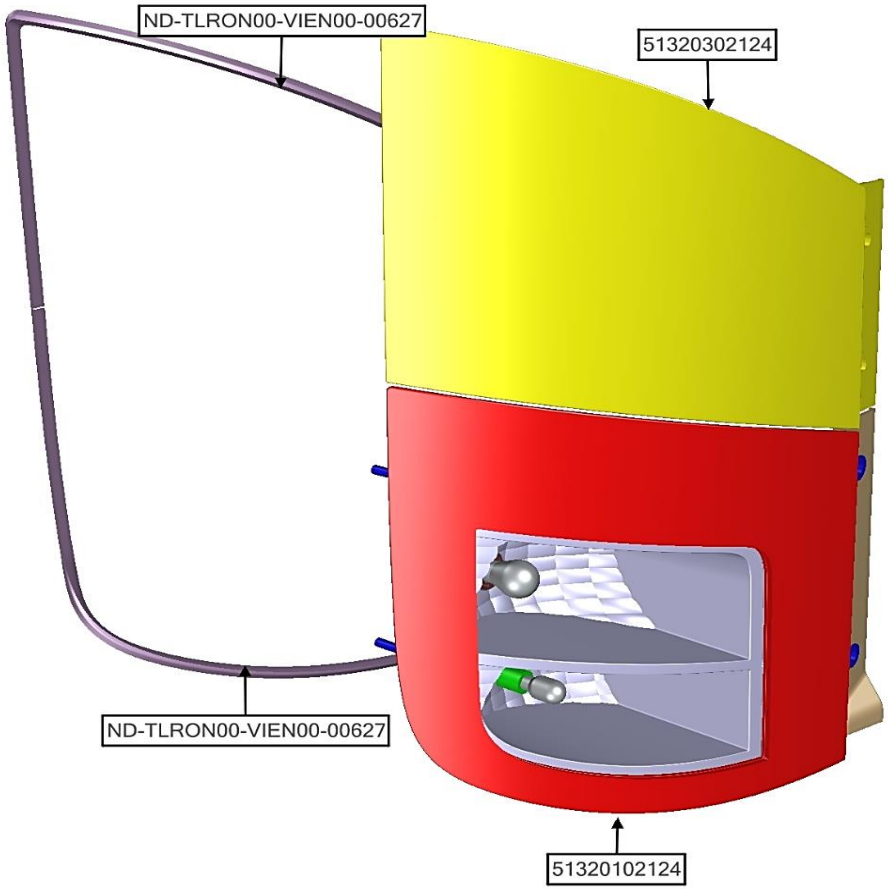


| NAME_ASSB | CODE_PART NO | NAME | QTY |
|---|---|---|---|
| REAR LAMP LH ASSY | 51320102124 | REAR LAMP LH | 1 |
| | 51320302124 | SAFETY REFLECTOR | 1 |
| | ND-TLRON00-VIEN00-00627 | RUBBER-SEALING | 1 |
| | ND-TLRON00-VIEN00-00627 | RUBBER-SEALING | 1 |
| | | | |
| | | | |
| | | | |

| NAME_ASSB | CODE_PART NO | NAME | QTY |
|---|---|---|---|
| REAR LAMP RH ASSY | | | |
| | | | |
| | | | |
| | | | |
| | | | |
| | | | |
| | | | |

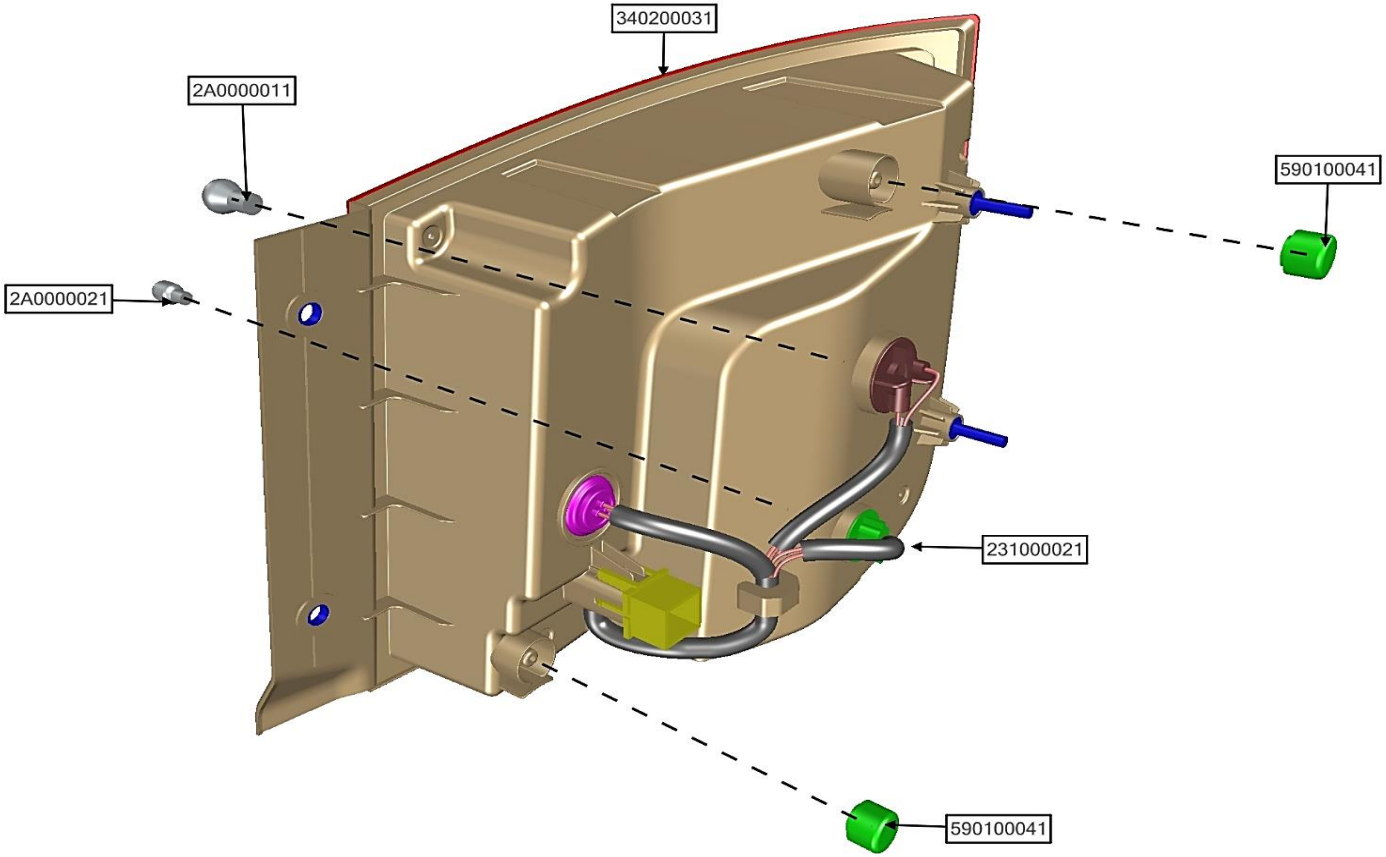


| NAME_ASSB | CODE_PART NO | NAME | QTY |
|---|---|---|---|
| REAR LAMP LH | 2A0000011 | BULD | 1 |
| | 2A0000021 | BULD | 1 |
| | 231000021 | WIRING ASSY | 1 |
| | 340200031 | COVER REAR LAMP LH | 1 |
| | 590100041 | RETAINER | 2 |
| | | | |
| | | | |

| NAME_ASSB | CODE_PART NO | NAME | QTY |
|---|---|---|---|
| REAR LAMP LH | | | |
| | | | |
| | | | |
| | | | |
| | | | |
| | | | |
| | | | |

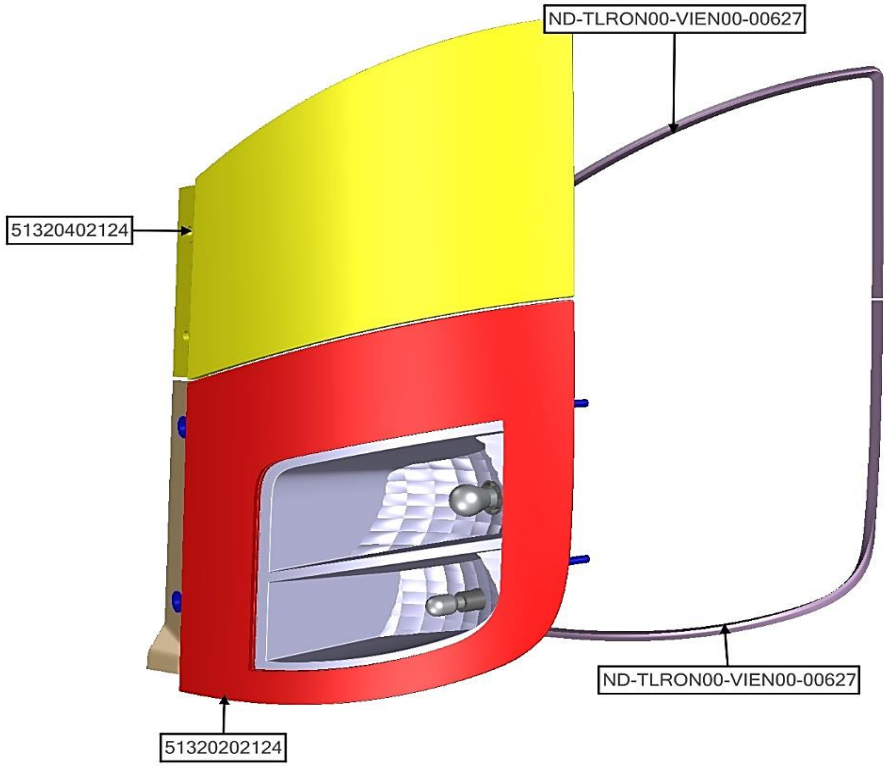


| NAME_ASSB | CODE_PART NO | NAME | QTY |
|---|---|---|---|
| REAR LAMP RH ASSY | 51320202124 | REAR LAMP RH | 1 |
| | 51320302124 | SAFETY REFLECTOR | 1 |
| | ND-TLRON00-VIEN00-00627 | RUBBER-SEALING | 1 |
| | ND-TLRON00-VIEN00-00627 | RUBBER-SEALING | 1 |
| | | | |
| | | | |
| | | | |

| NAME_ASSB | CODE_PART NO | NAME | QTY |
|---|---|---|---|
| REAR LAMP LH ASSY | | | |
| | | | |
| | | | |
| | | | |
| | | | |
| | | | |
| | | | |

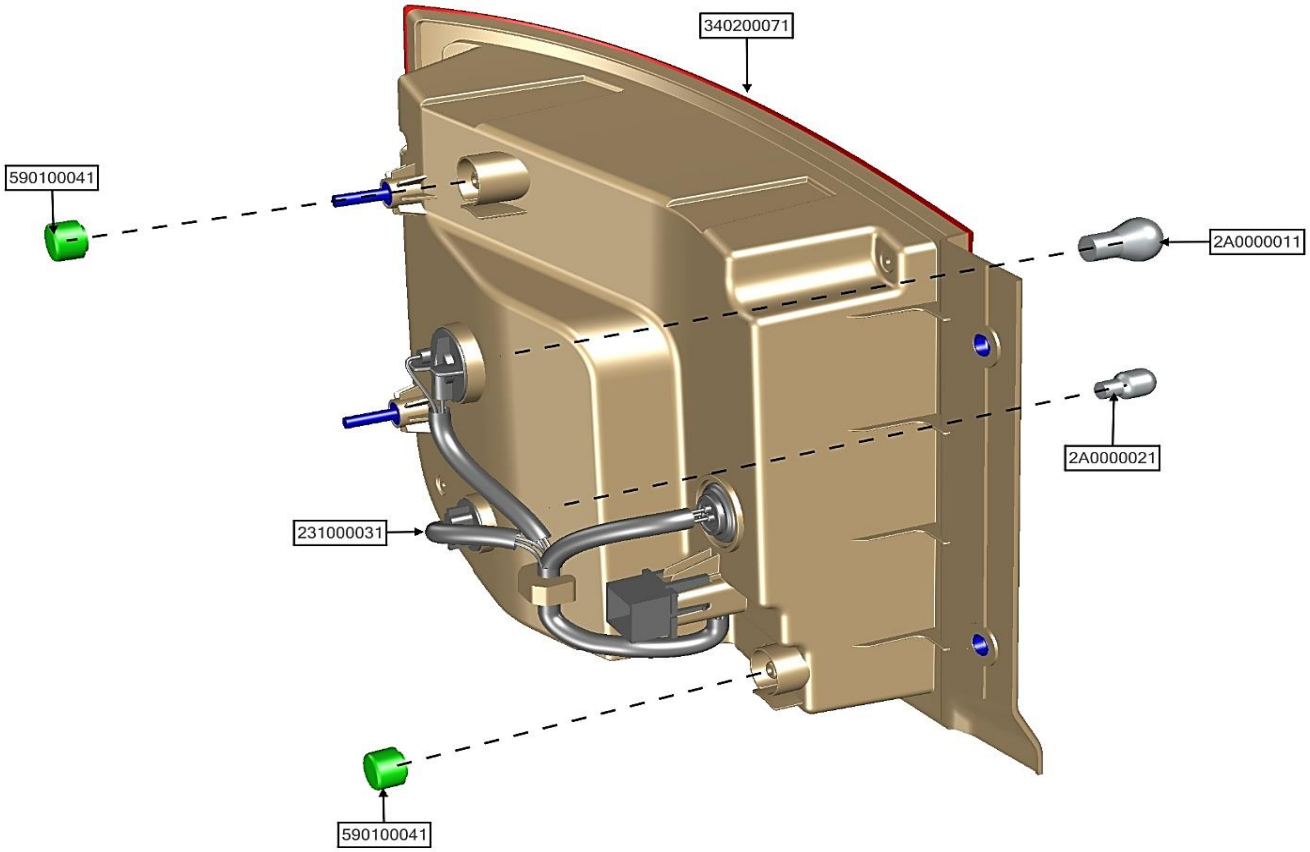


| NAME_ASSB | CODE_PART NO | NAME | QTY |
|---|---|---|---|
| REAR LAMP RH | 2A0000011 | BULD | 1 |
| | 2A0000021 | BULD | 1 |
| | 231000031 | WIRING ASSY | 1 |
| | 340200071 | COVER REAR LAMP RH | 1 |
| | 590100041 | RETAINER | 2 |
| | | | |
| | | | |

| NAME_ASSB | CODE_PART NO | NAME | QTY |
|---|---|---|---|
| REAR LAMP RH | | | |
| | | | |
| | | | |
| | | | |
| | | | |
| | | | |
| | | | |

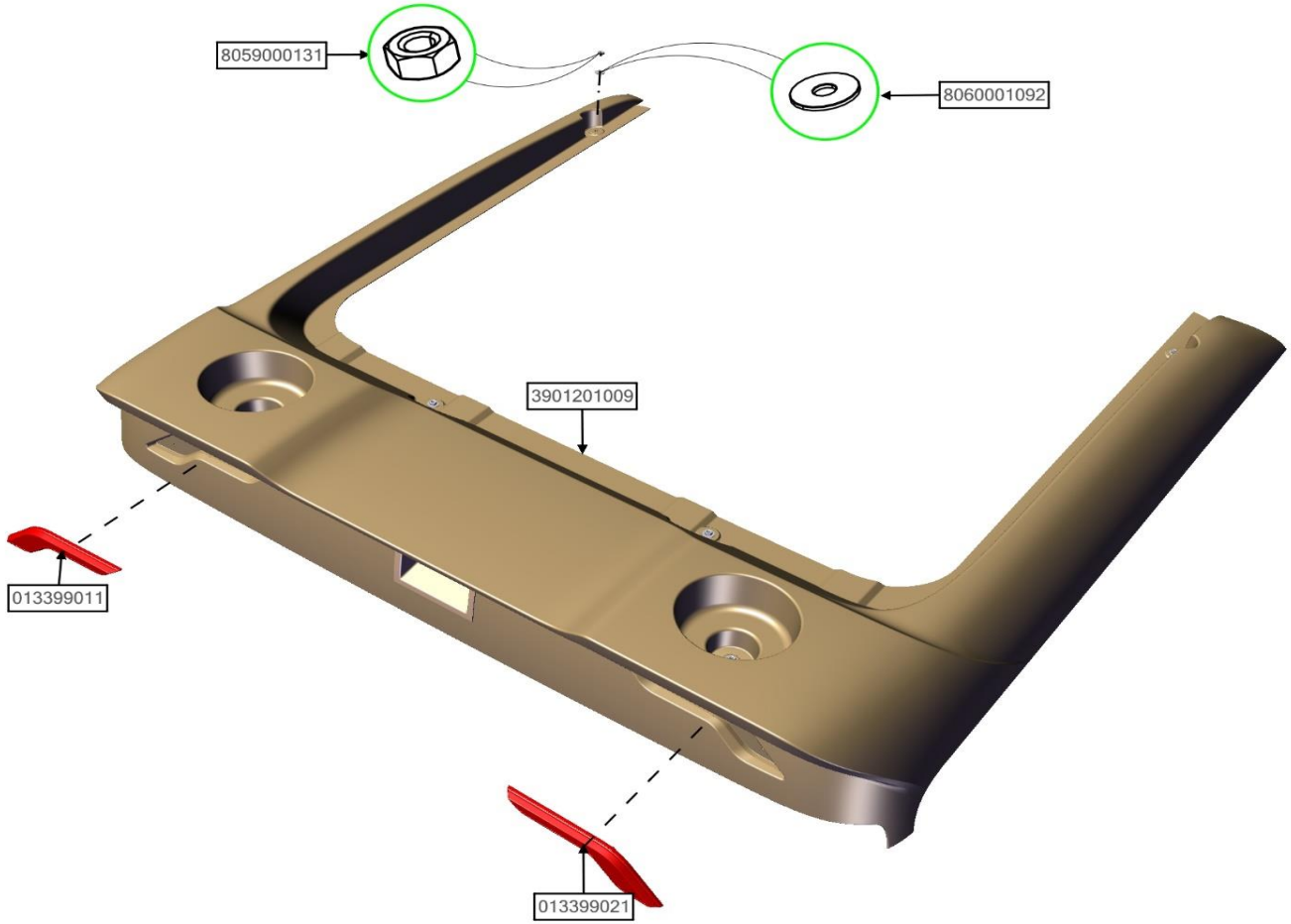


| ASSB_NAME | PART NO. | NAME | QTY |
|---|---|---|---|
| REAR SPOLIER ASSY | 3901201009 | REAR SPOLIER | 1 |
| | 8060001092 | WASHER Ø10 | 2 |
| | 8059000131 | NUT 10150 | 2 |
| | 13399021 | REAR LAMP SPOILER RH | 1 |
| | 13399011 | REAR LAMP SPOILER LH | 1 |
| | | | |
| | | | |

| ASSB_NAME | PART NO. | NAME | QTY |
|---|---|---|---|
| REAR SPOLIER ASSY | | | |
| | | | |
| | | | |
| | | | |
| | | | |
| | | | |
| | | | |

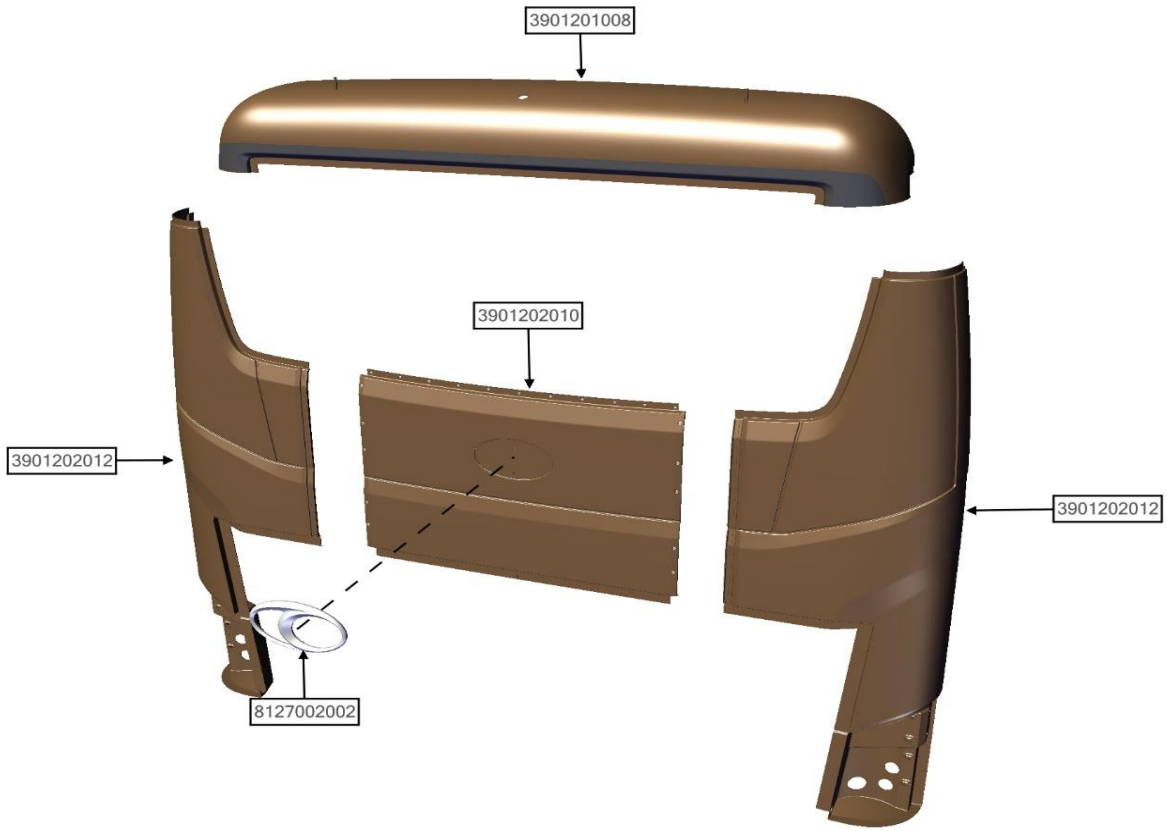


| ASSB_NAME | PART NO. | NAME | QTY |
|---|---|---|---|
| REAR MIDDLE PANEL-ASSY | 3901202010 | REAR MIDDLE PANEL | 1 |
| | 3901202012 | REAR PILLAR PANEL LH | 1 |
| | 3901202012 | REAR PILLAR PANEL RH | 1 |
| | 3901201008 | REAR ROOF PANEL | 1 |
| | 8127002002 | LOGO 280X150 | 1 |
| | | | |
| | | | |

| ASSB_NAME | PART NO. | NAME | QTY |
|---|---|---|---|
| REAR MIDDLE PANEL-ASSY | | | |
| | | | |
| | | | |
| | | | |
| | | | |
| | | | |
| | | | |

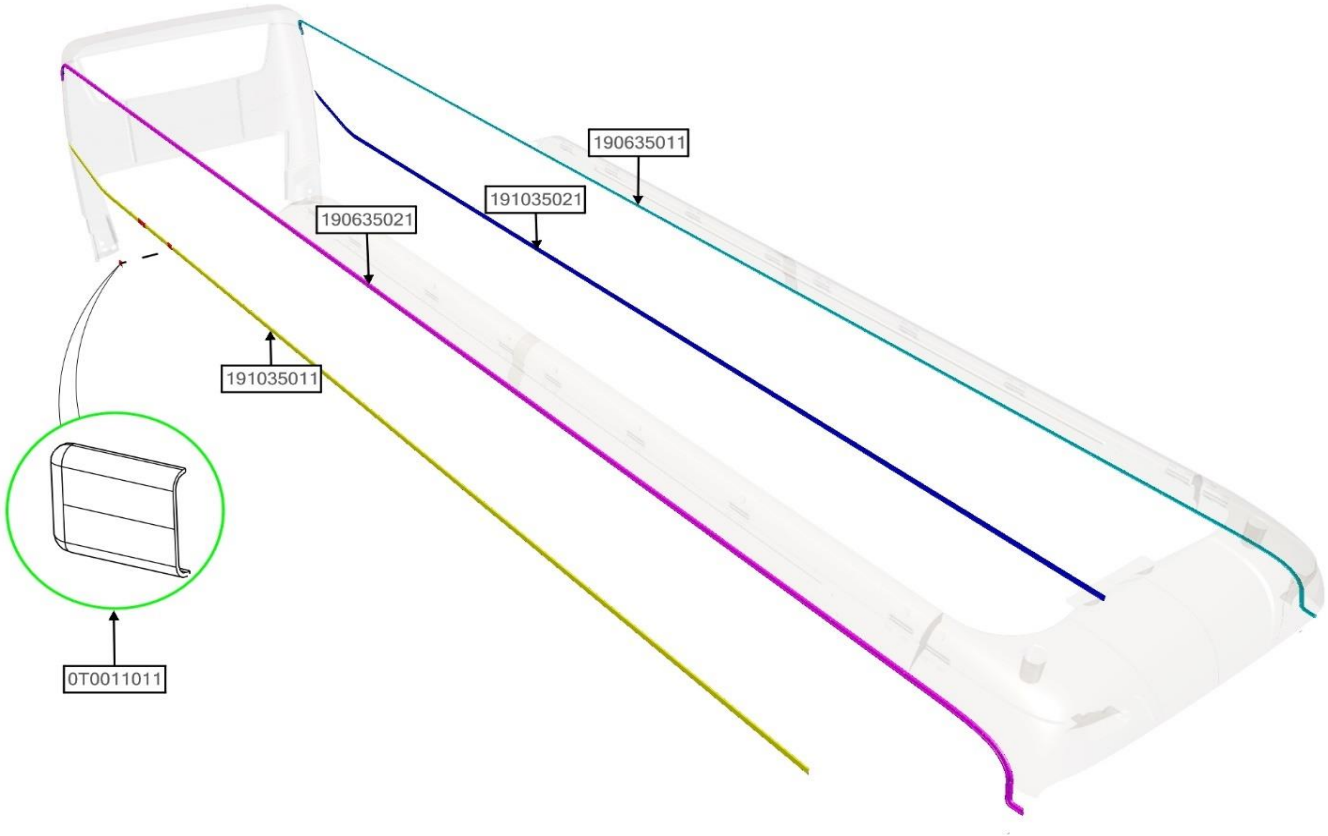


| ASSB_NAME | PART NO. | NAME | QTY |
|---|---|---|---|
| SIDE | 191035011 | MOULD | 1 |
| | 191035021 | MOULD | 1 |
| | 190635021 | MOULD | 1 |
| | 190635011 | MOULD | 1 |
| | 0T0011011 | COVER | 4 |
| | | | |
| | | | |

| ASSB_NAME | PART NO. | NAME | QTY |
|---|---|---|---|
| SIDE BUS | | | |
| | | | |
| | | | |
| | | | |
| | | | |
| | | | |
| | | | |

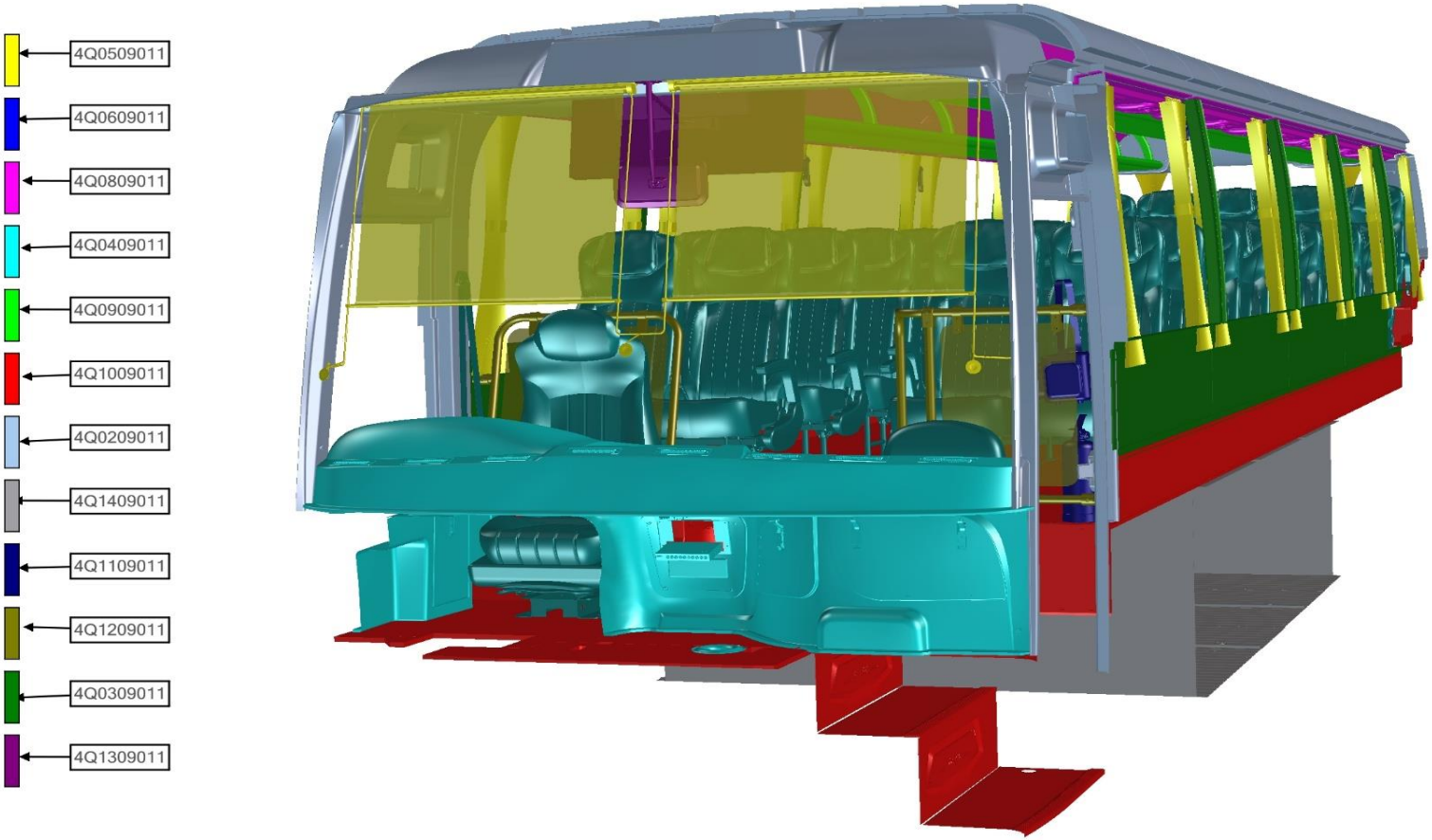


| ASSB_NAME | PART NO. | NAME | QTY |
|---|---|---|---|
| INTERIOR | 4Q0509011 | CURTAIN ASSY | 1 |
| | 4Q0309011 | SIDE BODY | 1 |
| | 4Q1109011 | SAFETY SYSTEM | 1 |
| | 4Q1409011 | LUGGAGE COMPARTMENT | 1 |
| | 4Q0609011 | SEATS | 1 |
| | 4Q0809011 | WIND DUCT ASSY | 1 |
| | 4Q0409011 | DASHBOARD ASSY | 1 |

| ASSB_NAME | PART NO. | NAME | QTY |
|---|---|---|---|
| INTERIOR | 4Q0909011 | HANDRAIL ASSY | 1 |
| | 4Q1009011 | FLOOR ASSY | 1 |
| | 4Q0209011 | CEILING | 1 |
| | 4Q1209011 | BRACE AND HANDRAIL | 1 |
| | 4Q1309011 | COMFORT | 1 |
| | | | |
| | | | |

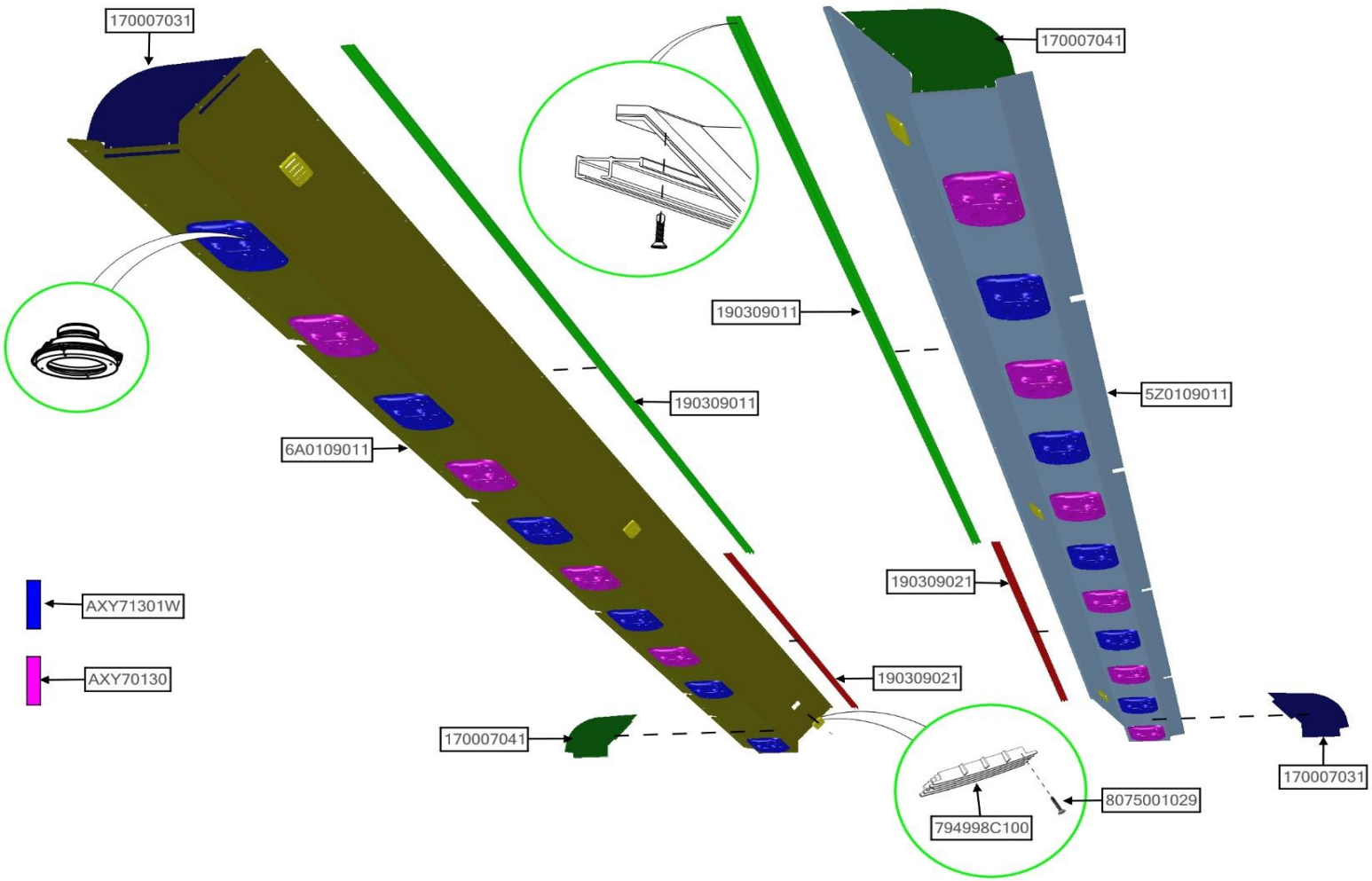


| ASSB_NAME | PART NO. | NAME | QTY |
|---|---|---|---|
| WIND DUCT ASSY | 8075001023 | SCREW 0420 | 1 |
| | 8075001029 | SCREW 03520 | 1 |
| | 5Z0109011 | LH WIND DUCT ASSY | 1 |
| | 6A0109011 | RH WIND DUCT ASSY | 1 |
| | 170007041 | RH WIND DUCT ASSY | 2 |
| | 190309011 | CLADDING 01 | 2 |
| | 190309021 | CLADDING 02 | 2 |

| ASSB_NAME | PART NO. | NAME | QTY |
|---|---|---|---|
| WIND DUCT ASSY | 170007031 | LH WIND DUCT ASSY | 2 |
| | 794998C100 | AIR-CONDITIONING DOOR | 6 |
| | AXY70130 | READING LIGHTS WITHOUT SPEAKERS | 10 |
| | AXY71301W | READING LIGHTS WITH SPEAKER | 11 |
| | SK51101 | SPEAKER | 11 |
| | | | |
| | | | |

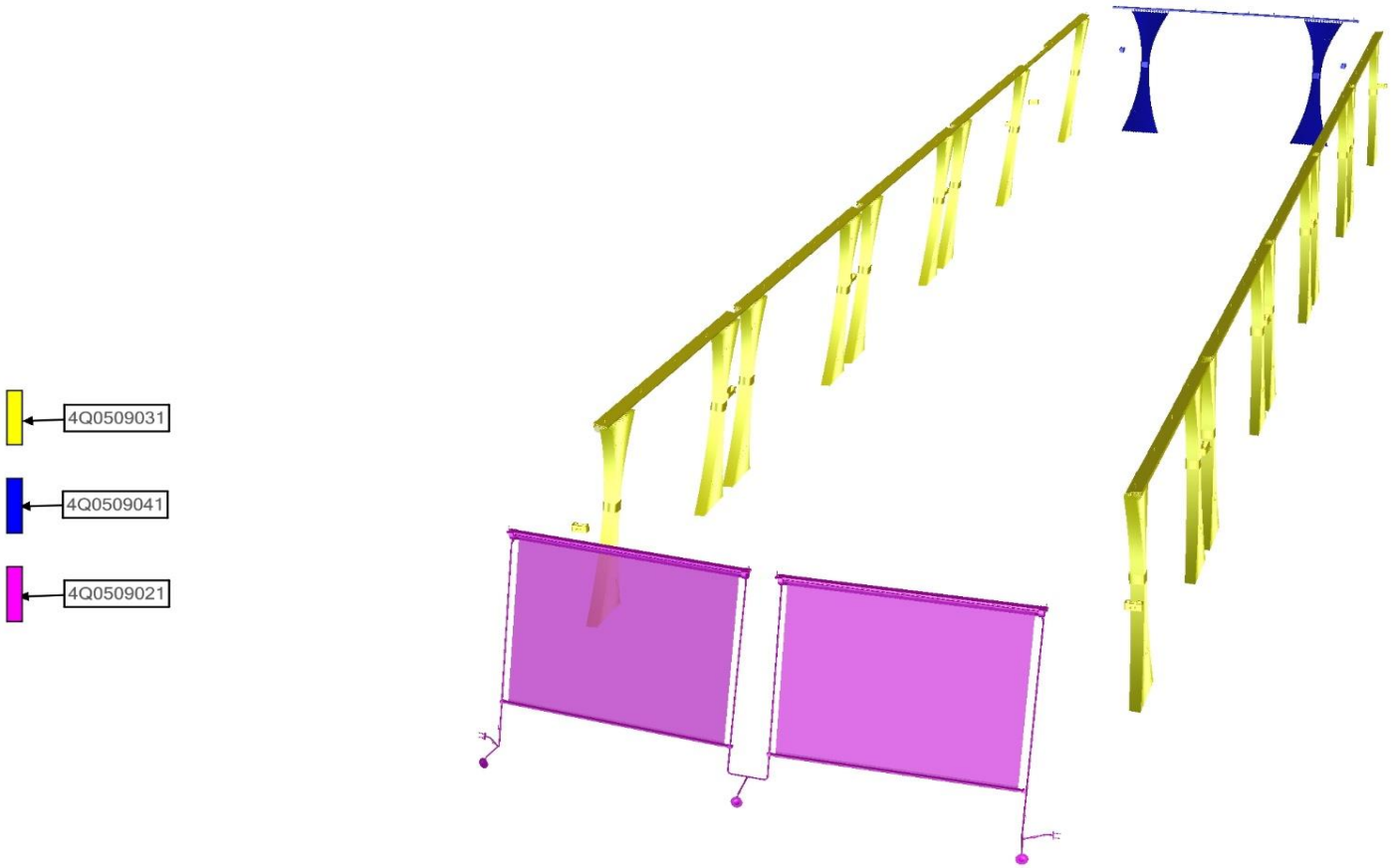


| ASSB_NAME | PART NO. | NAME | QTY |
|---|---|---|---|
| CURTAIN ASSY | 4Q0509031 | SIDE CURTAIN ASSY | 1 |
| | 4Q0509041 | REAR CURTAIN ASSY | 1 |
| | 4Q0509021 | SUNVISOR ASSY | 1 |
| | | | |
| | | | |
| | | | |
| | | | |

| ASSB_NAME | PART NO. | NAME | QTY |
|---|---|---|---|
| CURTAIN ASSY | | | |
| | | | |
| | | | |
| | | | |
| | | | |
| | | | |
| | | | |

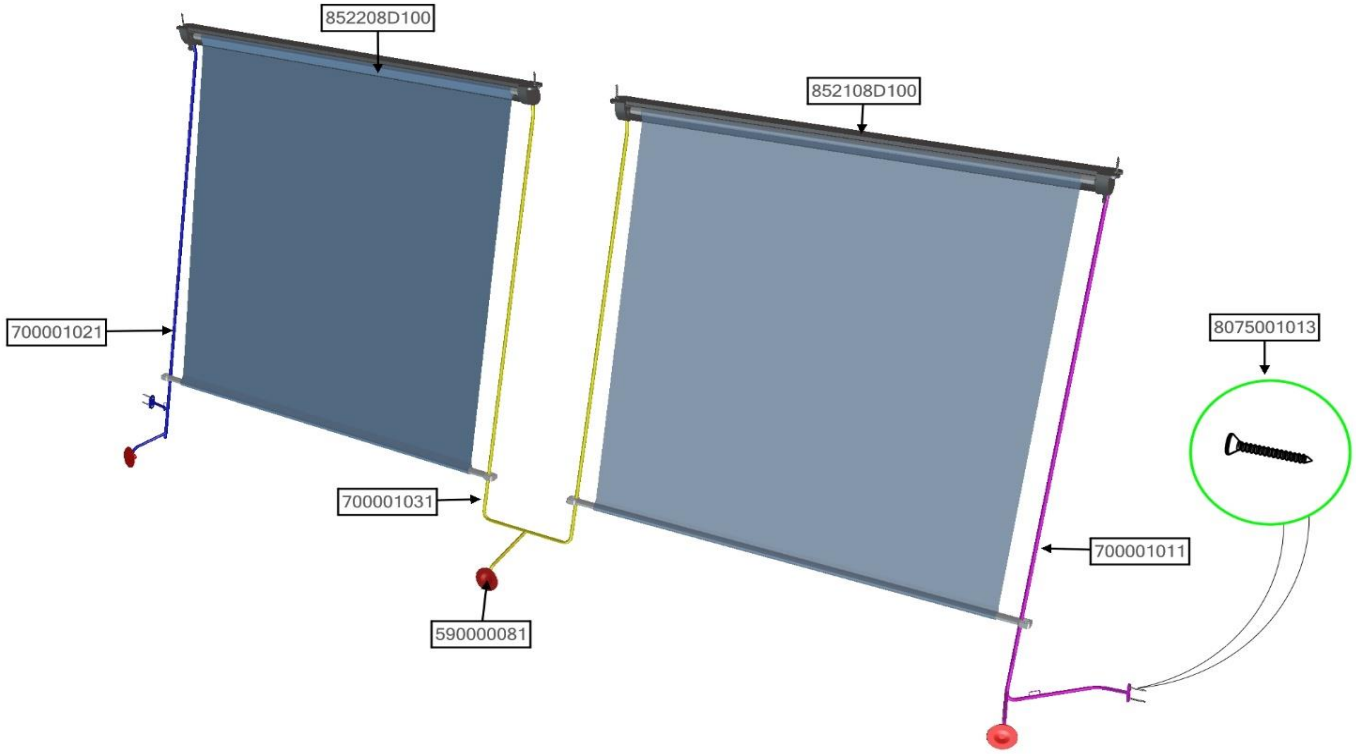


| ASSB_NAME | PART NO. | NAME | QTY |
|---|---|---|---|
| SUNVISOR ASSY | 852108D100 | LH SUNVISOR | 1 |
| | 852208D100 | RH SUNVISOR | 1 |
| | 590000081 | VACUUM RUBBER | 3 |
| | 700001031 | GUIDE BAR | 1 |
| | 700001021 | GUIDE BAR | 1 |
| | 700001011 | GUIDE BAR | 1 |
| | 8075001013 | SCREW 03530 | 1 |

| ASSB_NAME | PART NO. | NAME | QTY |
|---|---|---|---|
| SUNVISOR ASSY | | | |
| | | | |
| | | | |
| | | | |
| | | | |
| | | | |
| | | | |

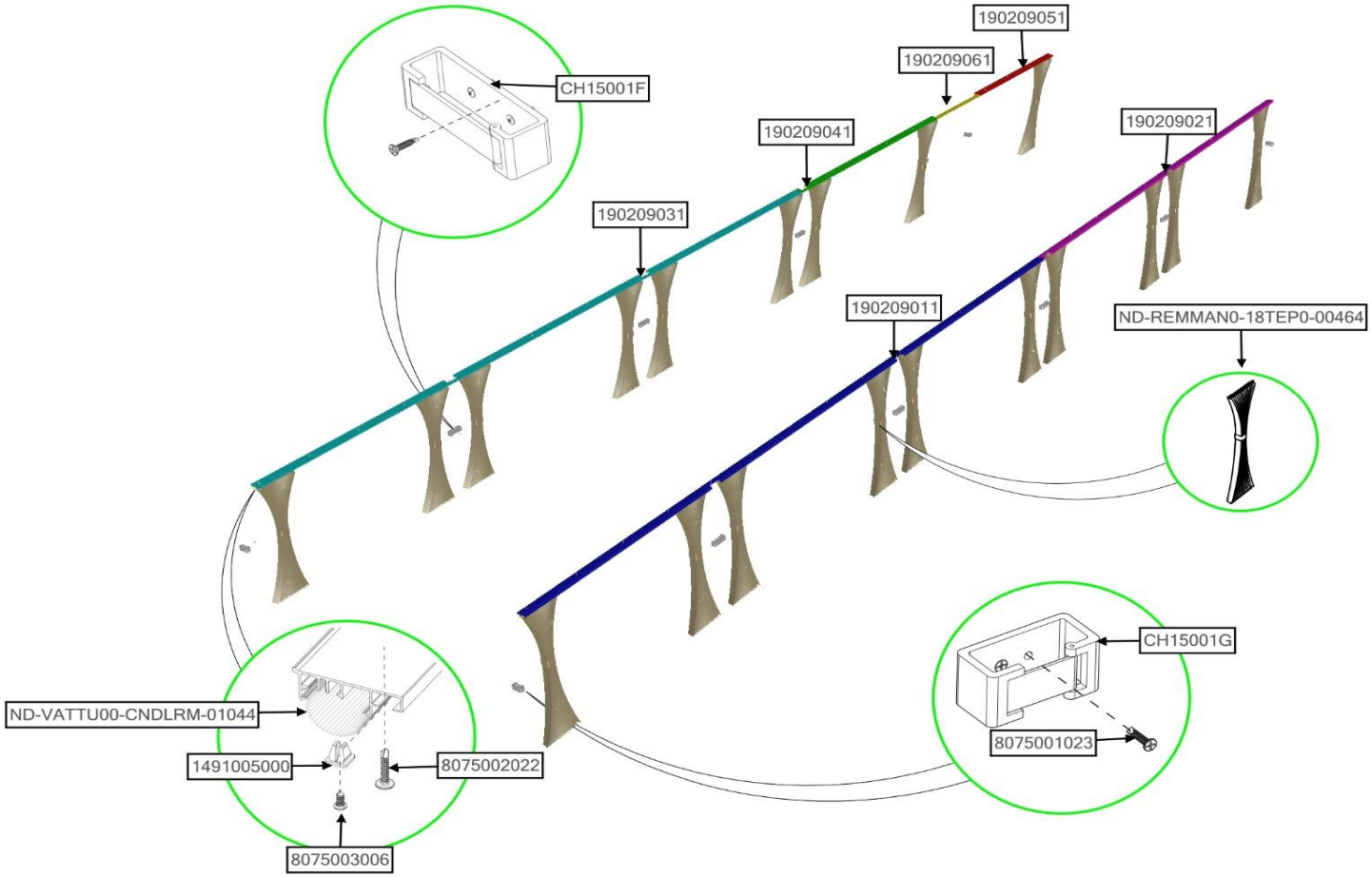


| ASSB_NAME | PART NO. | NAME | QTY |
|---|---|---|---|
| SIDE CURTAIN ASSY | 190209011 | LH CURTAIN RAIL 01 | 1 |
| | 190209021 | LH CURTAIN RAIL 02 | 1 |
| | 190209031 | RH CURTAIN RAIL 01 | 1 |
| | 190209041 | RH CURTAIN RAIL 02 | 1 |
| | 190209051 | RH CURTAIN RAIL 03 | 1 |
| | 1491005000 | CURTAIN BLINDS | 1 |
| | 8075003006 | SCREW 0410 | 1 |

| ASSB_NAME | PART NO. | NAME | QTY |
|---|---|---|---|
| SIDE CURTAIN ASSY | 8075002022 | SCREW 0425 | 1 |
| | 8075001023 | SCREW 0420 | 1 |
| | ND-REMMAN0-18TEP0-00464 | CURTAIN ASSY | 1 |
| | 190209061 | RH CURTAIN RAIL 04 | 1 |
| | ND-VATTU00-CNDLRM-01044 | CURTAIN LIGHT COVER | 2 |
| | CH15001G | CURTAIN HOOK | 5 |
| | CH15001F | CURTAIN HOOK | 7 |

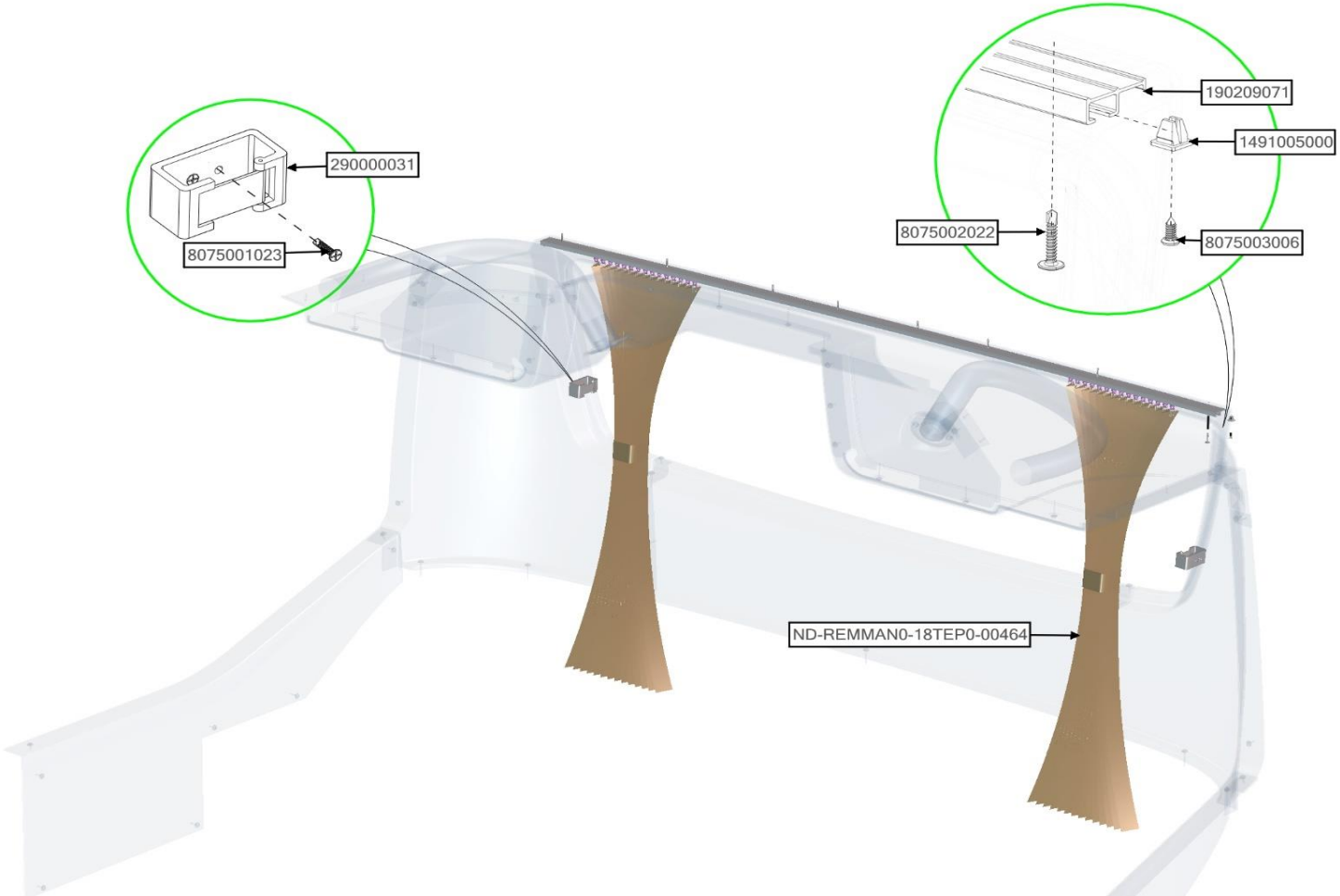


| ASSB_NAME | PART NO. | NAME | QTY |
|---|---|---|---|
| REAR CURTAIN ASSY | 8075003006 | SCREW 0410 | 1 |
| | 8075002022 | SCREW 0425 | 1 |
| | 1491005000 | CURTAIN BLINDS | 1 |
| | 190209071 | REAR CURTAIN RAIL | 1 |
| | 8075001023 | SCREW 0420 | 1 |
| | ND-REMMAN0-18TEP0-00464 | CURTAIN ASSY | 2 |
| | 290000031 | CURTAIN HOOK | 2 |

| ASSB_NAME | PART NO. | NAME | QTY |
|---|---|---|---|
| REAR CURTAIN ASSY | | | |
| | | | |
| | | | |
| | | | |
| | | | |
| | | | |
| | | | |

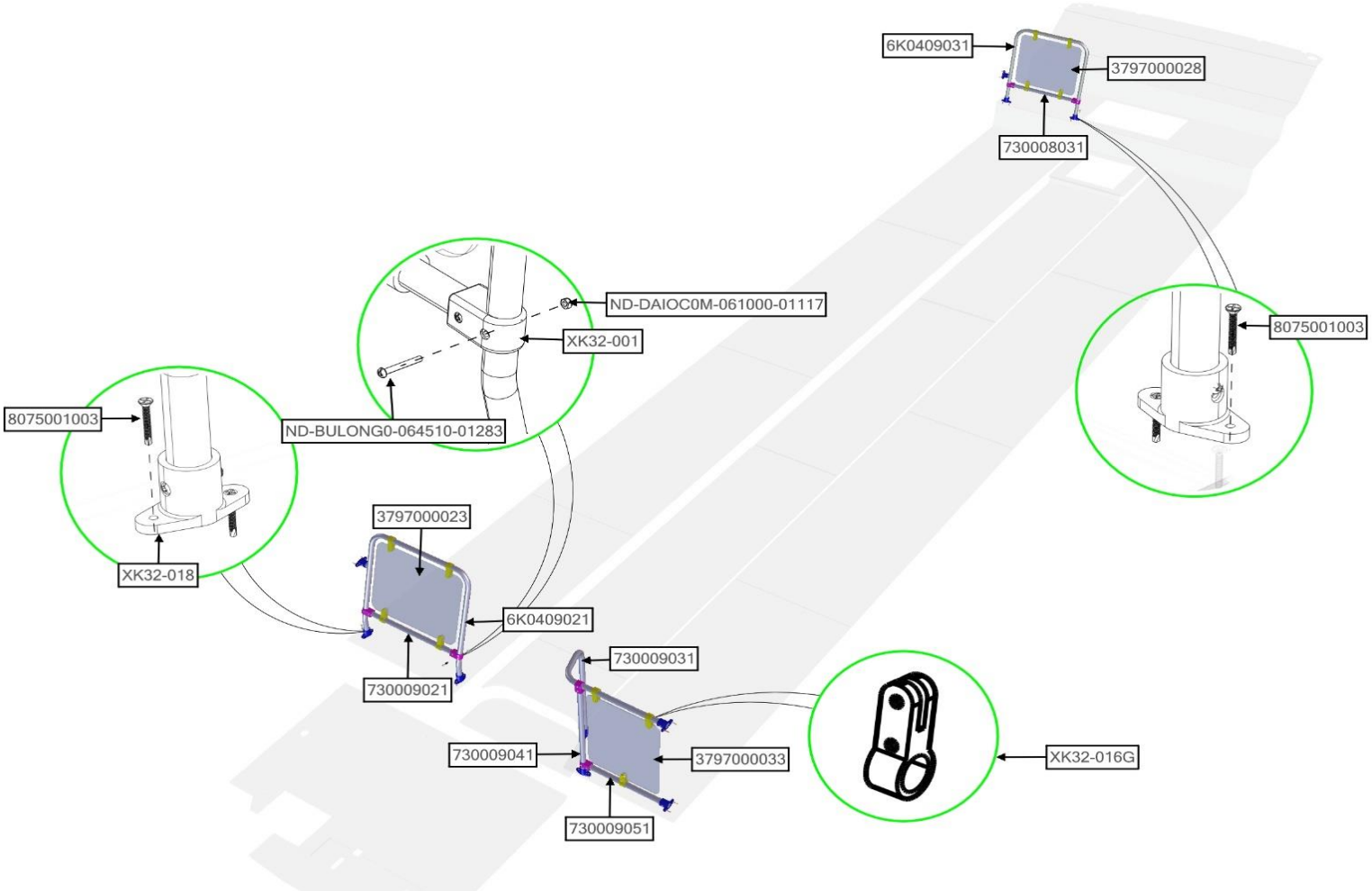


| ASSB_NAME | PART NO. | NAME | QTY |
|---|---|---|---|
| BRACE AND HANDRAIL | 730009031 | STAINLESS HANDRAIL 04 | 1 |
| | 730009041 | STAINLESS HANDRAIL 05 | 1 |
| | 730009051 | STAINLESS HANDRAIL 06 | 1 |
| | 730008031 | STAINLESS HANDRAIL 04 | 1 |
| | 6K0409021 | PARTITION FRAME 01 | 1 |
| | 6K0409031 | PARTITION FRAME 02 | 1 |
| | 3797000023 | PARTITION 03 | 1 |

| ASSB_NAME | PART NO. | NAME | QTY |
|---|---|---|---|
| BRACE AND HANDRAIL | 3797000033 | PARTITION 02 | 1 |
| | 3797000028 | PARTITION 01 | 1 |
| | 730009021 | STAINLESS HANDRAIL 02 | 1 |
| | 8075001003 | SCREW 0540 | 4 |
| | XK32-001 | POST MOUNTING | 6 |
| | XK32-018 | HANDRAIL POST MOUNT | 10 |
| | XK32-016G | PARTITION CLAMPS | 11 |

| ASSB_NAME | PART NO. | NAME | QTY |
|---|---|---|---|
| BRACE AND HANDRAIL | 8075001003 | SCREW 0540 | 16 |
| | ND-DAIOC0M-061000-01117 | NUT 06100 | 22 |
| | ND-BULONG0-064510-01283 | BOLT 06045100 | 23 |

| ASSB_NAME | PART NO. | NAME | QTY |
|---|---|---|---|
| BRACE AND HANDRAIL | | | |

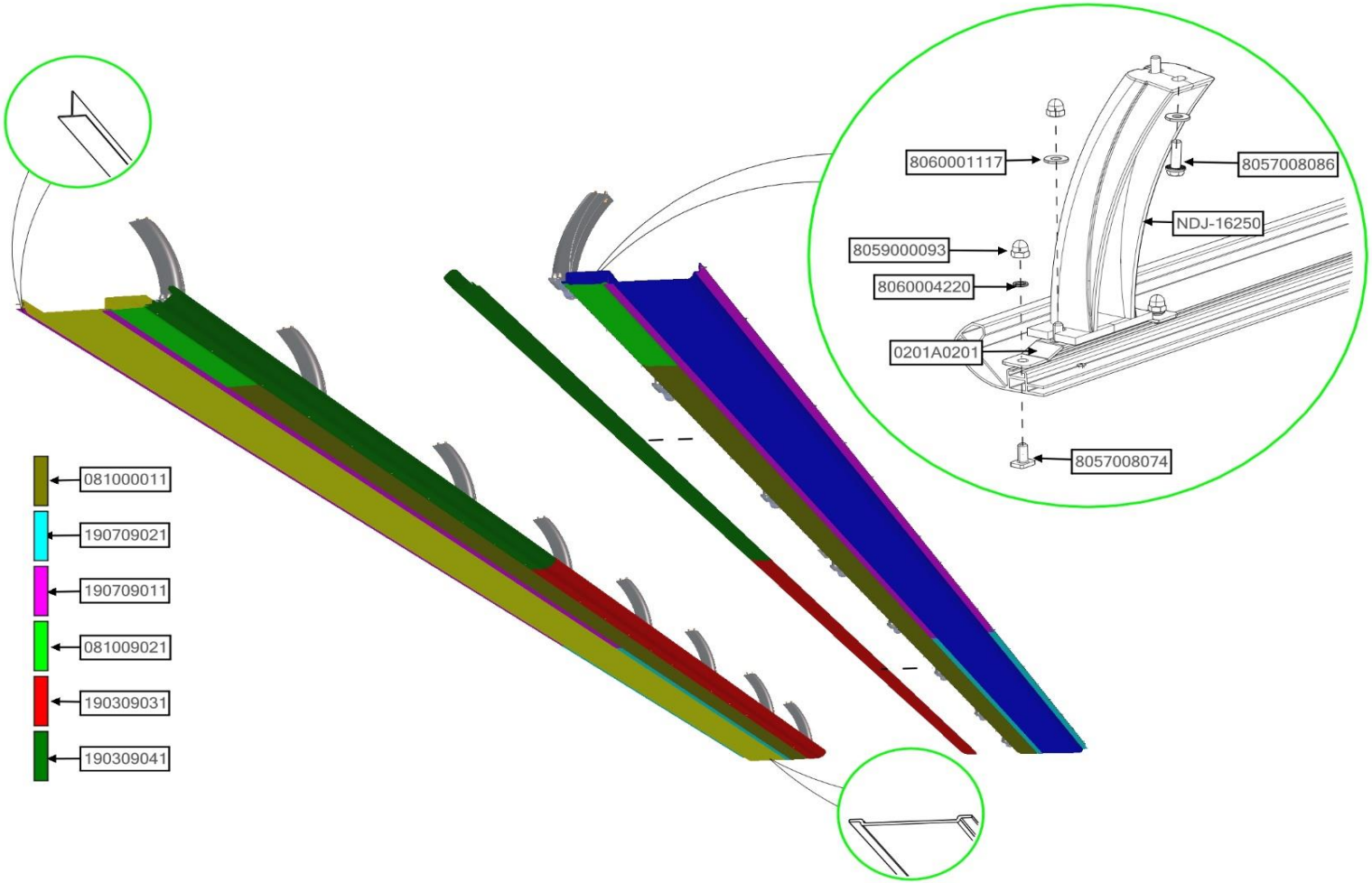


| ASSB_NAME | PART NO. | NAME | QTY |
|---|---|---|---|
| LUGGAGE SHELVES,ASSY | 6D0109011 | LUGGAGE SHELVES,LH | 1 |
| | 6E0109011 | LUGGAGE SHELVES,RH | 1 |
| | 8057008074 | BOLT 08015125 | 1 |
| | 8059000093 | NUT 08125 | 1 |
| | 8060004220 | WASHER Ø08 | 1 |
| | 8060001117 | WASHER Ø08 | 1 |
| | 0201A0201 | CONNECTOR BRACKET RAIL | 1 |

| ASSB_NAME | PART NO. | NAME | QTY |
|---|---|---|---|
| LUGGAGE SHELVES,ASSY | 8057008074 | BOLT 08015125 | 1 |
| | 8059000093 | NUT 08125 | 1 |
| | 0201A0161 | BRACKET SHELVES | 1 |
| | 8060004220 | WASHER Ø08 | 1 |
| | 8060001117 | WASHER Ø08 | 1 |
| | 081009021 | LINK COVER 02 | 2 |
| | 190309041 | RAIL,LUGGAGE SHELVES 02 | 2 |

| ASSB_NAME | PART NO. | NAME | QTY |
|---|---|---|---|
| LUGGAGE SHELVES,ASSY | 190309031 | RAIL,LUGGAGE SHELVES 01 | 2 |
| | 190709011 | SPLINT "T" 01 | 4 |
| | 190709021 | SPLINT "T" 02 | 4 |
| | NDJ-16250 | SHELVES | 16 |
| | 081000011 | LINK COVER 01 | 18 |
| | 8057008086 | BOLT 08025125 | 32 |

| ASSB_NAME | PART NO. | NAME | QTY |
|---|---|---|---|
| LUGGAGE SHELVES,ASSY | | | |

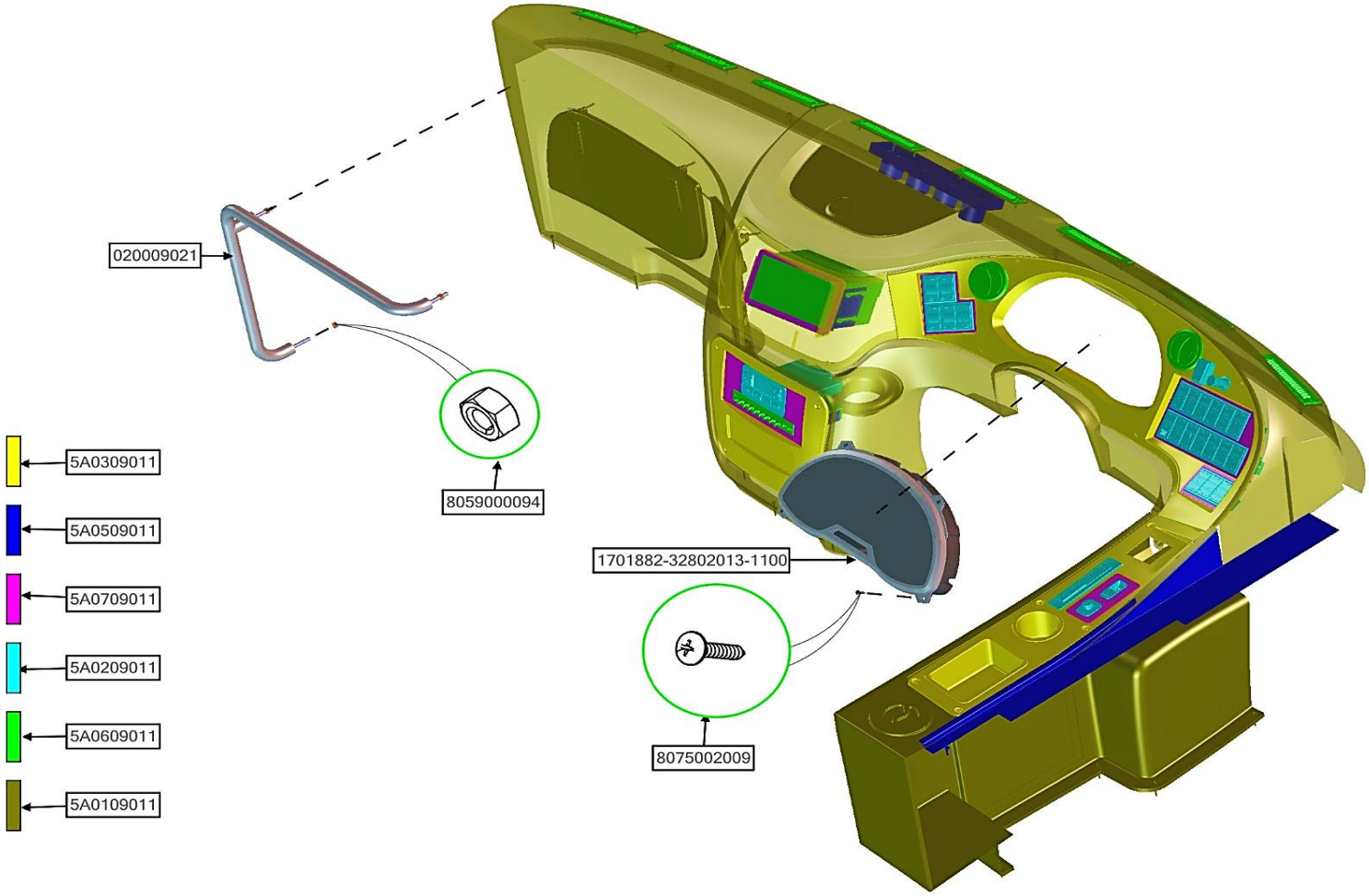


| ASSB_NAME | PART NO. | NAME | QTY |
|---|---|---|---|
| DASHBOARD ASSEMBLY | 5A0309011 | FACIA PANEL | 1 |
| | 1701882-32802013-1100 | FACIA | 1 |
| | 5A0509011 | CONNECTION DETAILS | 1 |
| | 5A0709011 | SWITCH PANEL ASSEMBLY | 1 |
| | 5A0209011 | SWITCH ASSEMBLY | 1 |
| | 5A0609011 | COMPONENT PART | 1 |
| | 5A0109011 | PANEL ASSEMBLY | 1 |

| ASSB_NAME | PART NO. | NAME | QTY |
|---|---|---|---|
| DASHBOARD ASSEMBLY | 020009021 | DASHBOARD HANDRAIL | 1 |
| | 8059000094 | NUT 08125 | 3 |
| | 8075002009 | SCREW 0420 | 4 |
| | | | |
| | | | |
| | | | |
| | | | |

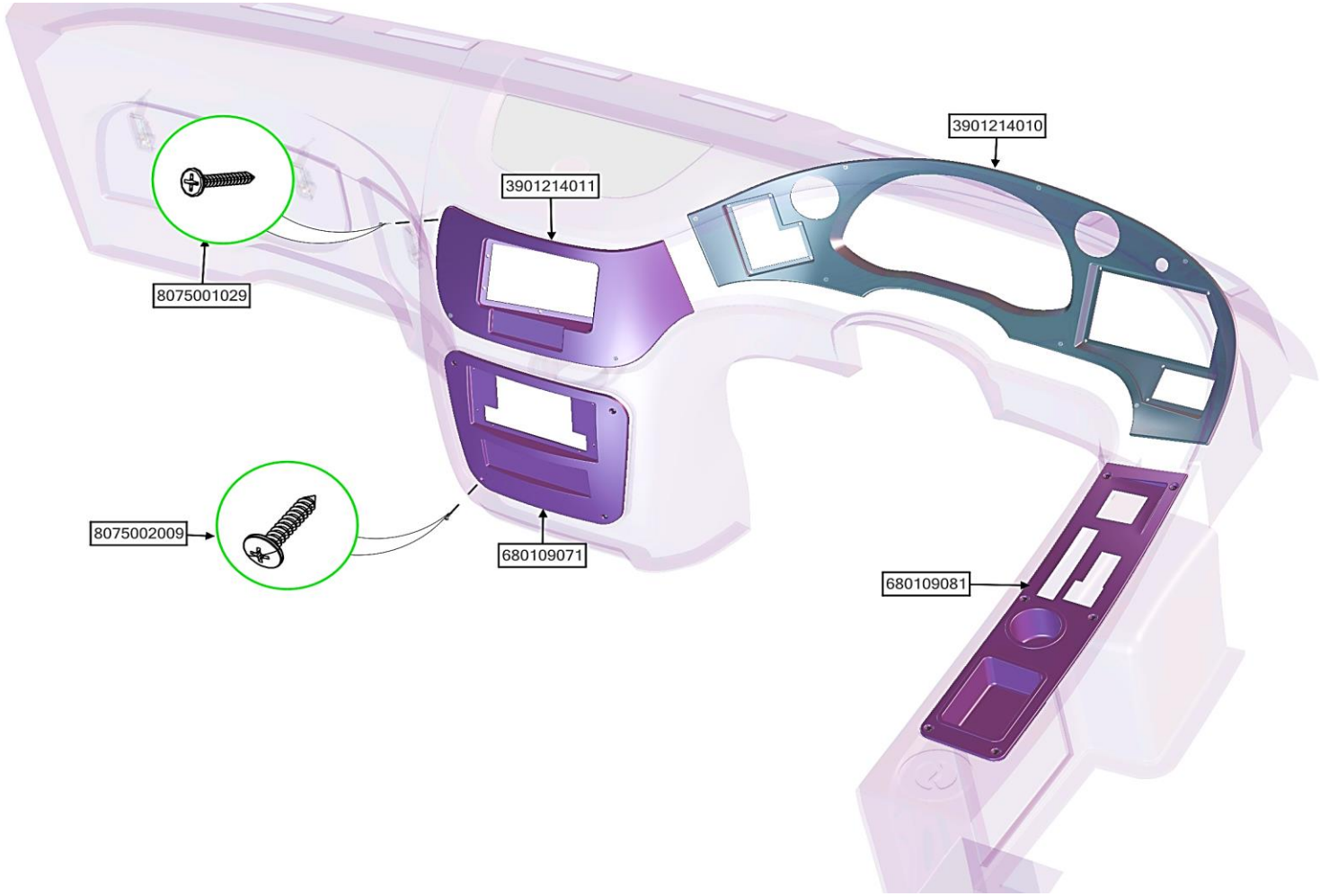


| ASSB_NAME | PART NO. | NAME | QTY |
|---|---|---|---|
| FACIA PANEL ASSY | 680109071 | MAIN FACIA PANEL 01 | 1 |
| | 680109081 | EXTRA FACIA PANEL | 1 |
| | 3901214010 | FACIA PANEL | 1 |
| | 3901214011 | MAIN FACIA PANEL 02 | 1 |
| | 8075002009 | SCREW 0420 | 1 |
| | 8075001029 | SCREW 03520 | 1 |
| | | | 1 |

| ASSB_NAME | PART NO. | NAME | QTY |
|---|---|---|---|
| FACIA PANEL ASSY | | | |
| | | | |
| | | | |
| | | | |
| | | | |
| | | | |
| | | | |

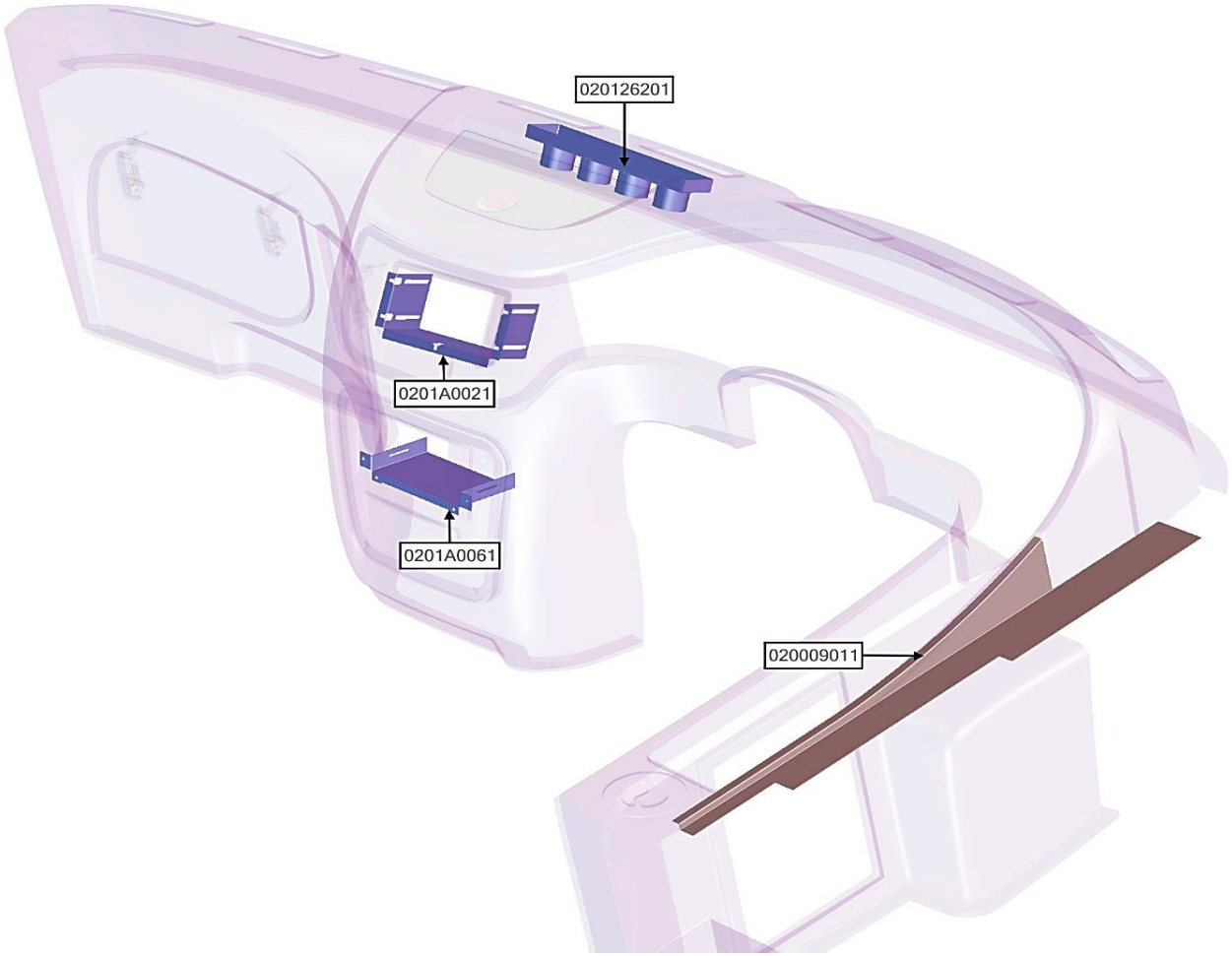


| ASSB_NAME | PART NO. | NAME | QTY |
|---|---|---|---|
| CONNECTION DETAILS | 0201A0021 | DVD BRACKET | 1 |
| | 020126201 | HEAT SEPARATOR | 1 |
| | 0201A0061 | MIXER BRACKET | 1 |
| | 020009011 | COVER,APPENDICAL PANEL | 1 |
| | | | |
| | | | |
| | | | |

| ASSB_NAME | PART NO. | NAME | QTY |
|---|---|---|---|
| CONNECTION DETAILS | | | |
| | | | |
| | | | |
| | | | |
| | | | |
| | | | |
| | | | |

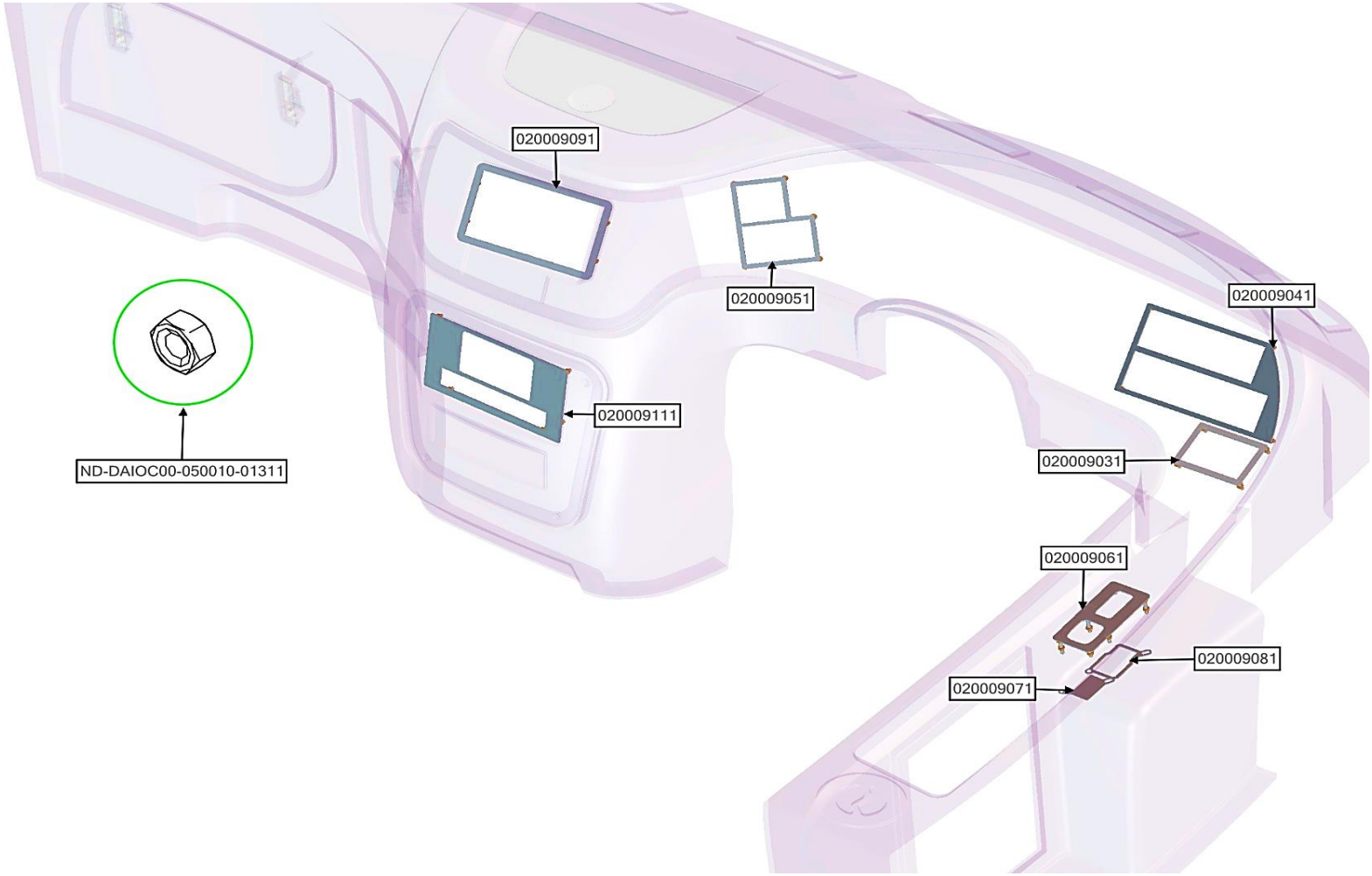


| ASSB_NAME | PART NO. | NAME | QTY |
|---|---|---|---|
| SWITCH SUPPORT ASSY | 020009041 | SWITCH SUPPORT 02 | 1 |
| | 020009051 | SWITCH SUPPORT 03 | 1 |
| | 020009031 | SWITCH SUPPORT 01 | 1 |
| | 020009091 | SUPPORT DVD 2 DIN | 1 |
| | 020009111 | SUPPORT MIXER | 1 |
| | 020009081 | SWITCH SUPPORT 06 | 1 |
| | 020009071 | SWITCH SUPPORT 05 | 1 |

| ASSB_NAME | PART NO. | NAME | QTY |
|---|---|---|---|
| SWITCH SUPPORT ASSY | 020009061 | SWITCH SUPPORT 04 | 1 |
| | ND-DAIOC00-050010-01311 | NUT 05100 | 33 |
| | | | |
| | | | |
| | | | |
| | | | |
| | | | |

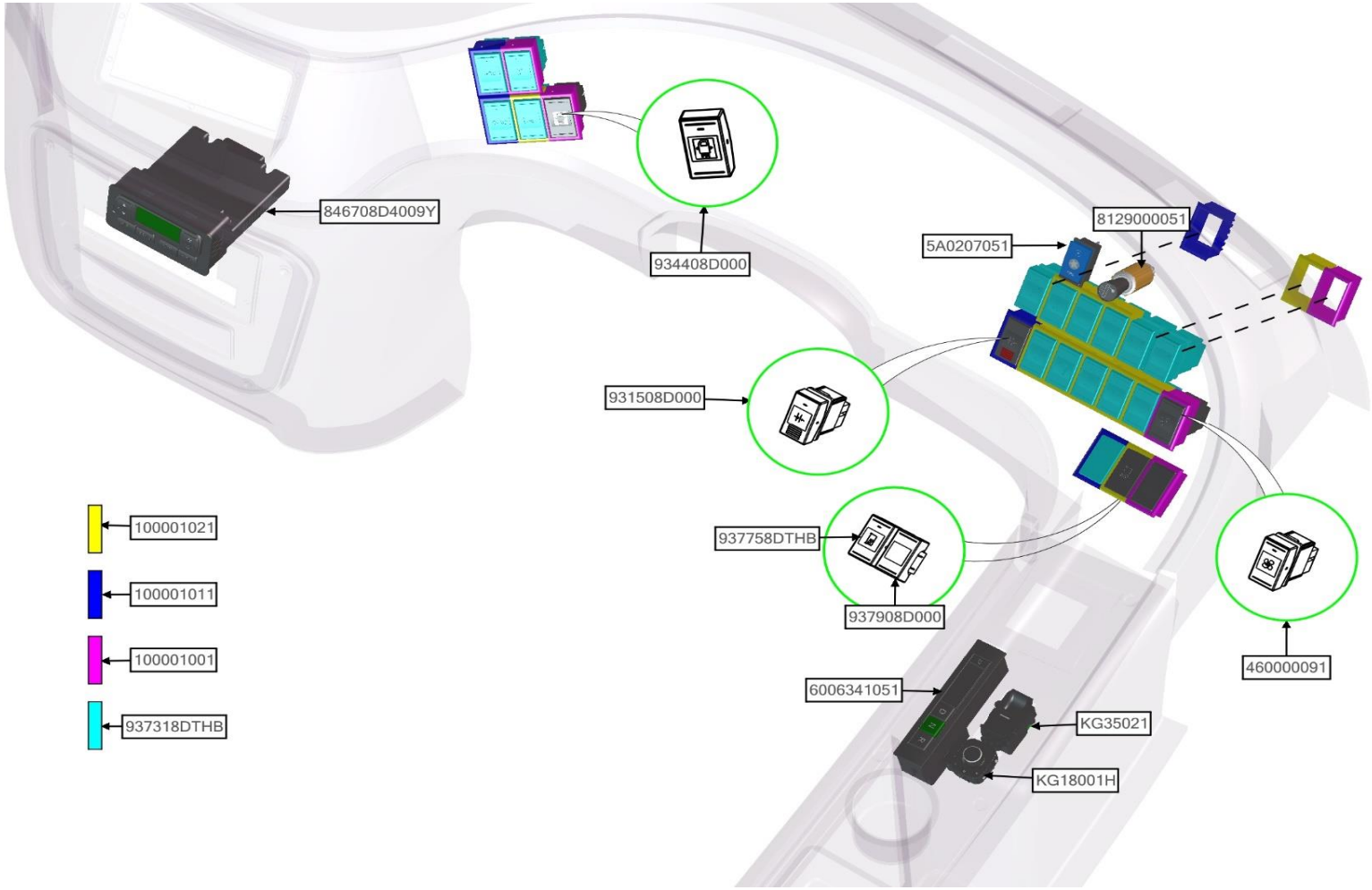


| ASSB_NAME | PART NO. | NAME | QTY |
|---|---|---|---|
| SWITCHES ASSY | 937908D000 | BACKGROUND SWITCH | 1 |
| | 931508D000 | POWER SWITCH | 1 |
| | 8129000051 | LIGHTERS | 1 |
| | 5A0207051 | FIRE FIGHTING SWITCH ASSY | 1 |
| | 937758DTHB | REAR MIRROR DRYING SWITCH | 1 |
| | 846708D4009Y | AIR SWITCH | 1 |
| | 934408D000 | PASSENGER DOOR CONTROL SWITCH | 1 |
| | 460000091 | CEILING FAN SWITCH | 1 |

| ASSB_NAME | PART NO. | NAME | QTY |
|---|---|---|---|
| SWITCHES ASSY | 6006341051 | NUMBER CONTROL SWITCH | 1 |
| | KG35021 | GLASS RAISE SWITCH | 1 |
| | KG18001H | REAR MIRROR CONTROL SWITCH | 1 |
| | 100001011 | LEFT SWITCH BRACKET | 5 |
| | 100001001 | RIGHT SWITCH BRACKET | 5 |
| | 100001021 | BETWEEN SWITCH BRACKET | 11 |
| | 937318DTHB | SWITCH | 16 |
| | | | |

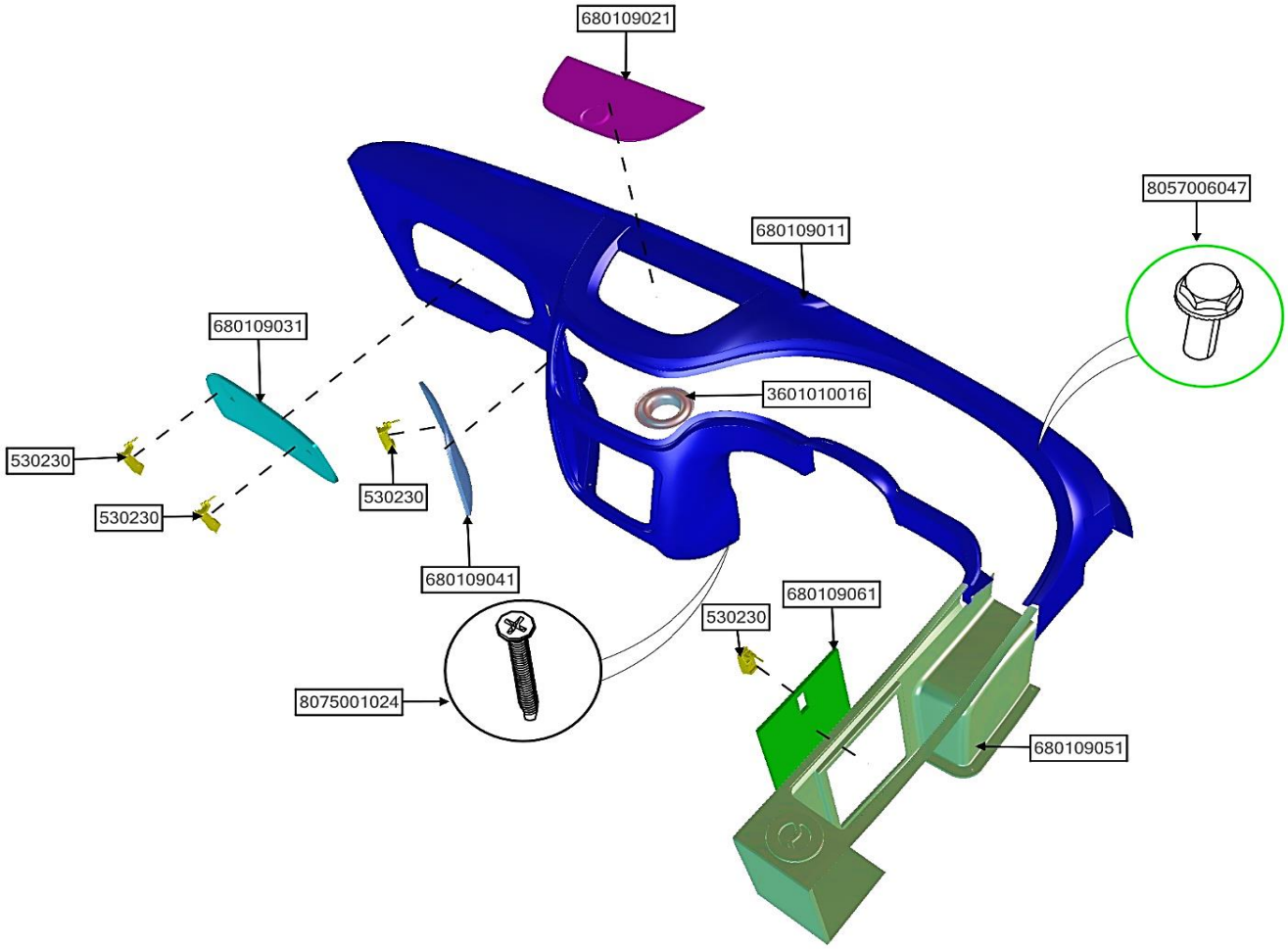


| ASSB_NAME | PART NO. | NAME | QTY |
|---|---|---|---|
| PANEL ASSEMBLY | 680109011 | MAIN PANEL | 1 |
| | 680109061 | COVER,APPENDICAL PANEL | 1 |
| | 680109051 | APPENDICAL PANEL | 1 |
| | 680109031 | COVER, MAIN PANEL 02 | 1 |
| | 680109041 | COVER, MAIN PANEL 03 | 1 |
| | 680109021 | COVER, MAIN PANEL 01 | 1 |
| | 3601010016 | WIRE COVER | 1 |

| ASSB_NAME | PART NO. | NAME | QTY |
|---|---|---|---|
| PANEL ASSEMBLY | 530230 | LOCK PIN | 4 |
| | 8057006047 | BOLT 06020100 | 6 |
| | 8075001024 | SCREW 0440 | 14 |
| | | | |
| | | | |
| | | | |
| | | | |

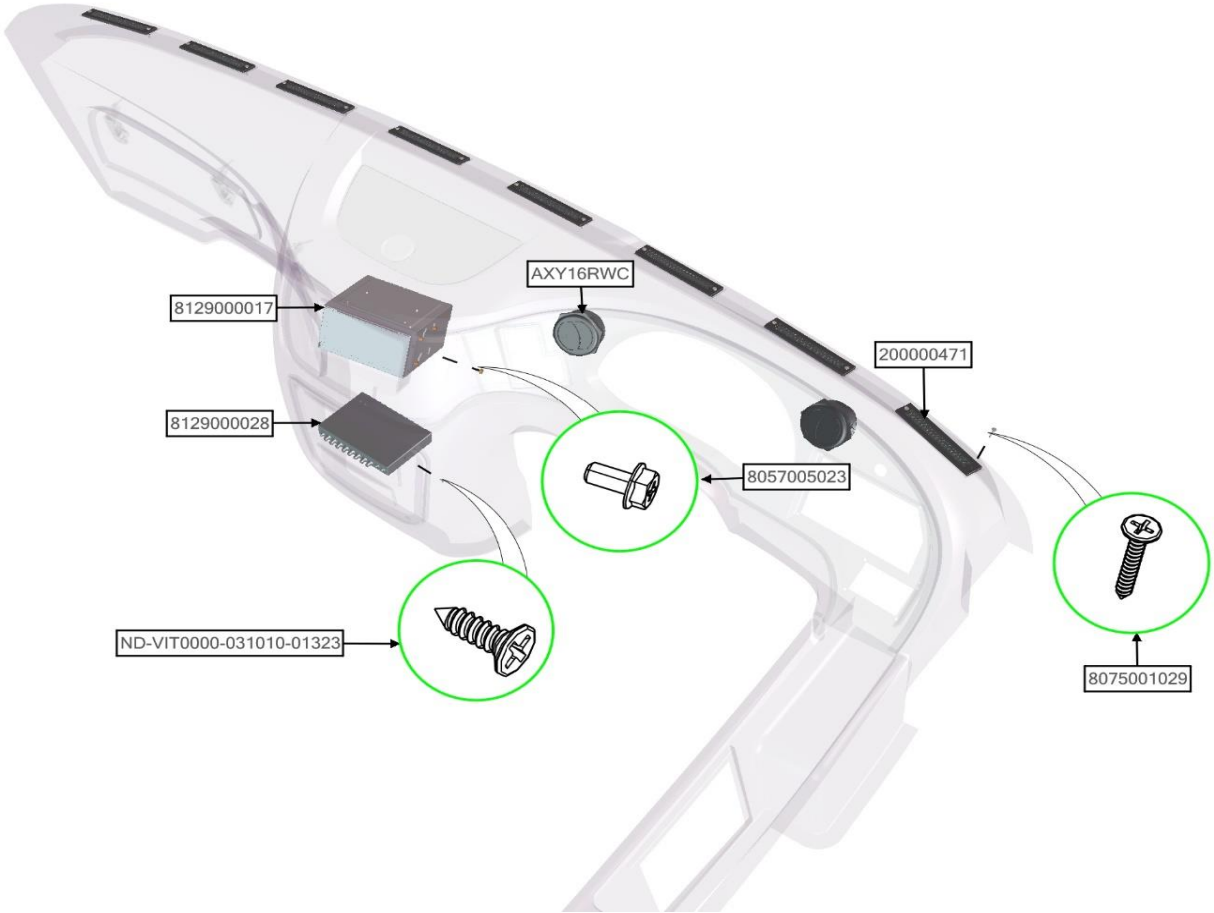


| ASSB_NAME | PART NO. | NAME | QTY |
|---|---|---|---|
| COMPONENT PART | 8129000017 | DVD ANDROID | 1 |
| | 8129000028 | MIXER | 1 |
| | AXY16RWC | AIR VENT | 2 |
| | ND-VIT0000-031010-01323 | SCREW 0310 | 4 |
| | 8057005023 | BOLT 05010100 | 8 |
| | 200000471 | HEAT VENT | 8 |
| | 8075001029 | SCREW 03520 | 16 |

| ASSB_NAME | PART NO. | NAME | QTY |
|---|---|---|---|
| COMPONENT PART | | | |
| | | | |
| | | | |
| | | | |
| | | | |
| | | | |
| | | | |

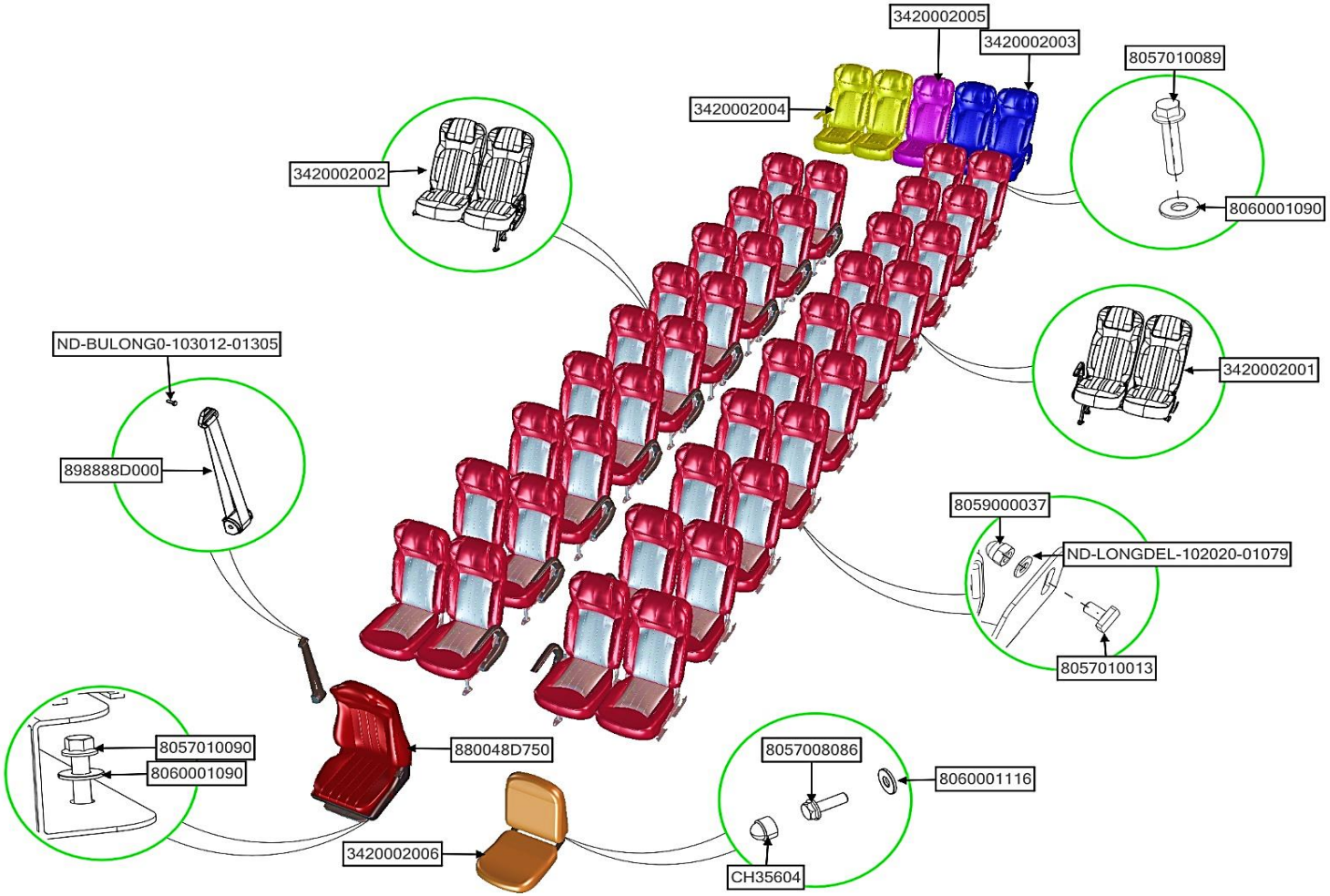


| ASSB_NAME | PART NO. | NAME | QTY |
|---|---|---|---|
| SEATS | 3420002006 | GUIDE SEAT | 1 |
| | 8057008086 | BOLT 08025125 | 1 |
| | 8060001116 | WASHER Ø08 | 1 |
| | CH35604 | BOLT COVER | 1 |
| | 880048D750 | DRIVER SEAT | 1 |
| | 8057010090 | BOLT 10045125 | 1 |
| | 3420002003 | REAR LEFT DOUBLE SEAT | 1 |

| ASSB_NAME | PART NO. | NAME | QTY |
|---|---|---|---|
| SEATS | 3420002004 | REAR RIGHT DOUBLE SEAT | 1 |
| | 3420002005 | REAR SINGLE SEAT | 1 |
| | 8059000037 | NUT 10125 | 1 |
| | ND-LONGDEL-102020-01079 | WASHER Ø10 | 1 |
| | 8057010013 | BOLT 10018125 | 1 |
| | 8057010089 | BOLT 10045125 | 1 |
| | 8060001090 | WASHER Ø10 | 1 |

| ASSB_NAME | PART NO. | NAME | QTY |
|---|---|---|---|
| SEATS | ND-BULONG0-103012-01305 | BOLT 10030125 | 1 |
| | 898888D000 | SEAT BELT | 1 |
| | 3420002002 | DOUBLE SEAT,RH | 9 |
| | 3420002001 | DOUBLE SEAT,LH | 10 |

| ASSB_NAME | PART NO. | NAME | QTY |
|---|---|---|---|
| SEATS | | | |

| ASSB_NAME | PART NO. | NAME | QTY |
|---|---|---|---|
| REAR RIGHT DOUBLE SEAT | 27303-B4100 | HANDRAIL | 1 |
| | 24205-B41O0 | RIGHT COVER HANDRAIL | 1 |
| | | | |
| | | | |
| | | | |
| | | | |
| | | | |

| ASSB_NAME | PART NO. | NAME | QTY |
|---|---|---|---|
| REAR RIGHT DOUBLE SEAT | | | |
| | | | |
| | | | |
| | | | |
| | | | |
| | | | |
| | | | |

| ASSB_NAME | PART NO. | NAME | QTY |
|---|---|---|---|
| REAR LEFT DOUBLE SEAT | 24105-B41O0 | LEFT COVER HANDRAIL | 1 |
| | 27303-B4100 | HANDRAIL | 1 |
| | | | |
| | | | |
| | | | |
| | | | |
| | | | |

| ASSB_NAME | PART NO. | NAME | QTY |
|---|---|---|---|
| REAR LEFT DOUBLE SEAT | | | |
| | | | |
| | | | |
| | | | |
| | | | |
| | | | |
| | | | |

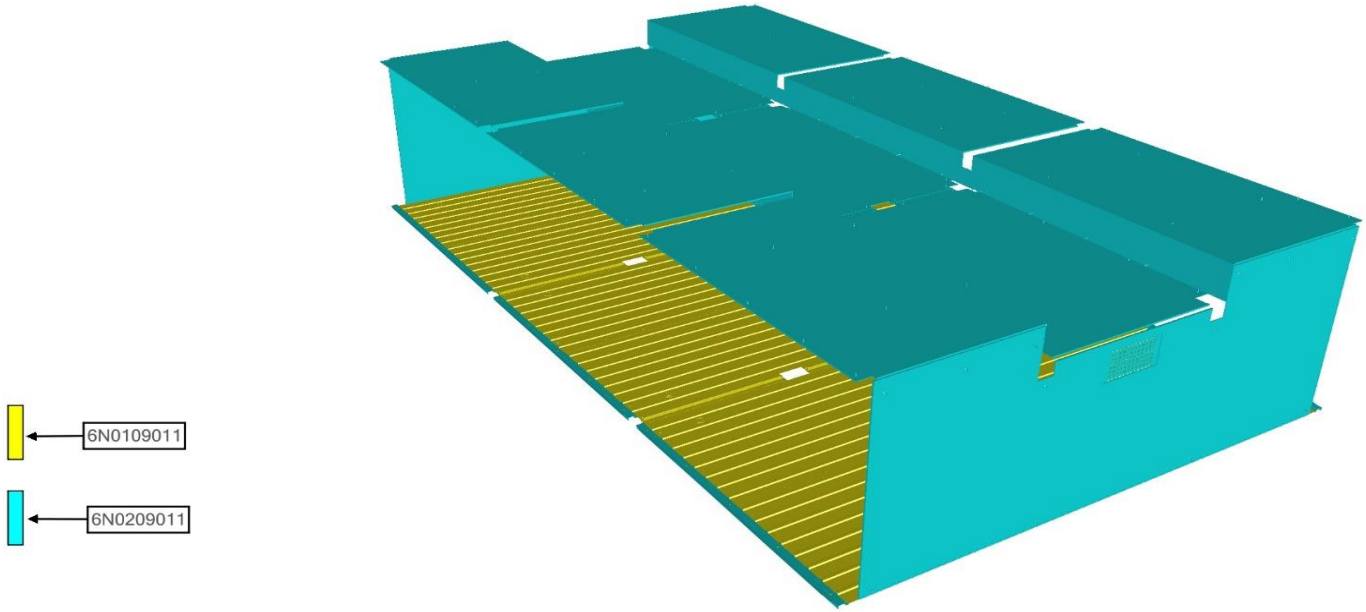


| ASSB_NAME | PART NO. | NAME | QTY |
|---|---|---|---|
| LUGGAGE COMPARTMENT | 6N0109011 | PANEL ASSY | 1 |
| | 6N0209011 | FLOOR ASSY,LUGGAGE COMPARTMENT | 1 |
| | | | |
| | | | |
| | | | |
| | | | |
| | | | |

| ASSB_NAME | PART NO. | NAME | QTY |
|---|---|---|---|
| LUGGAGE COMPARTMENT | | | |
| | | | |
| | | | |
| | | | |
| | | | |
| | | | |
| | | | |

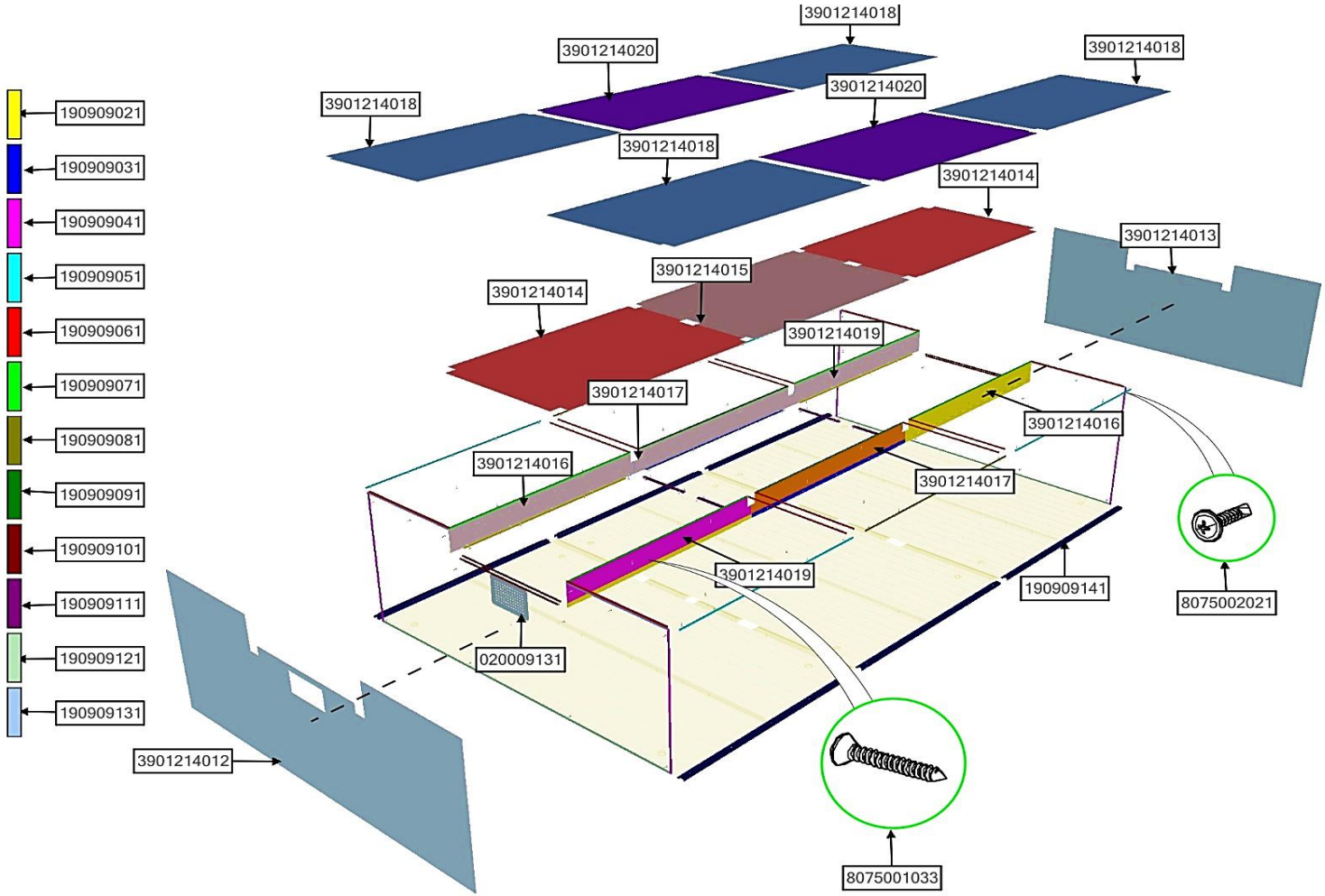


| ASSB_NAME | PART NO. | NAME | QTY |
|---|---|---|---|
| PANEL ASSY | 20009131 | LUGGAGE COMPARTMENT COVER | 1 |
| | 3901214013 | LUGGAGE COMPARTMENT PANEL 02 | 1 |
| | 3901214015 | LUGGAGE COMPARTMENT PANEL 04 | 1 |
| | 3901214012 | LUGGAGE COMPARTMENT PANEL 01 | 1 |
| | 8075002021 | SCREW 0420 | 1 |
| | 8075001033 | SCREW 0425 | 1 |
| | 190909121 | ALUMINIUM SPLINT 11 | 2 |

| ASSB_NAME | PART NO. | NAME | QTY |
|---|---|---|---|
| PANEL ASSY | 3901214014 | LUGGAGE COMPARTMENT PANEL 03 | 2 |
| | 3901214016 | LUGGAGE COMPARTMENT PANEL 05 | 2 |
| | 3901214017 | LUGGAGE COMPARTMENT PANEL 06 | 2 |
| | 190909031 | ALUMINIUM SPLINT 02 | 2 |
| | 3901214019 | LUGGAGE COMPARTMENT PANEL 08 | 2 |
| | 3901214020 | LUGGAGE COMPARTMENT PANEL 09 | 2 |
| | 190909081 | ALUMINIUM SPLINT 07 | 2 |

| ASSB_NAME | PART NO. | NAME | QTY |
|---|---|---|---|
| PANEL ASSY | 190909091 | ALUMINIUM SPLINT 08 | 2 |
| | 190909021 | ALUMINIUM SPLINT 01 | 4 |
| | 190909131 | ALUMINIUM SPLINT 12 | 4 |
| | 3901214018 | LUGGAGE COMPARTMENT PANEL 07 | 4 |
| | 190909041 | ALUMINIUM SPLINT 03 | 4 |
| | 190909051 | ALUMINIUM SPLINT 04 | 4 |
| | 190909071 | ALUMINIUM SPLINT 06 | 4 |
| | 190909101 | ALUMINIUM SPLINT 09 | 4 |
| | 190909141 | LUGGAGE COMPARTMENT SPLINT 01 | 6 |
| | 190909111 | ALUMINIUM SPLINT 10 | 8 |
| | 190909061 | ALUMINIUM SPLINT 05 | 12 |

| ASSB_NAME | PART NO. | NAME | QTY |
|---|---|---|---|
| PANEL ASSY | | | |

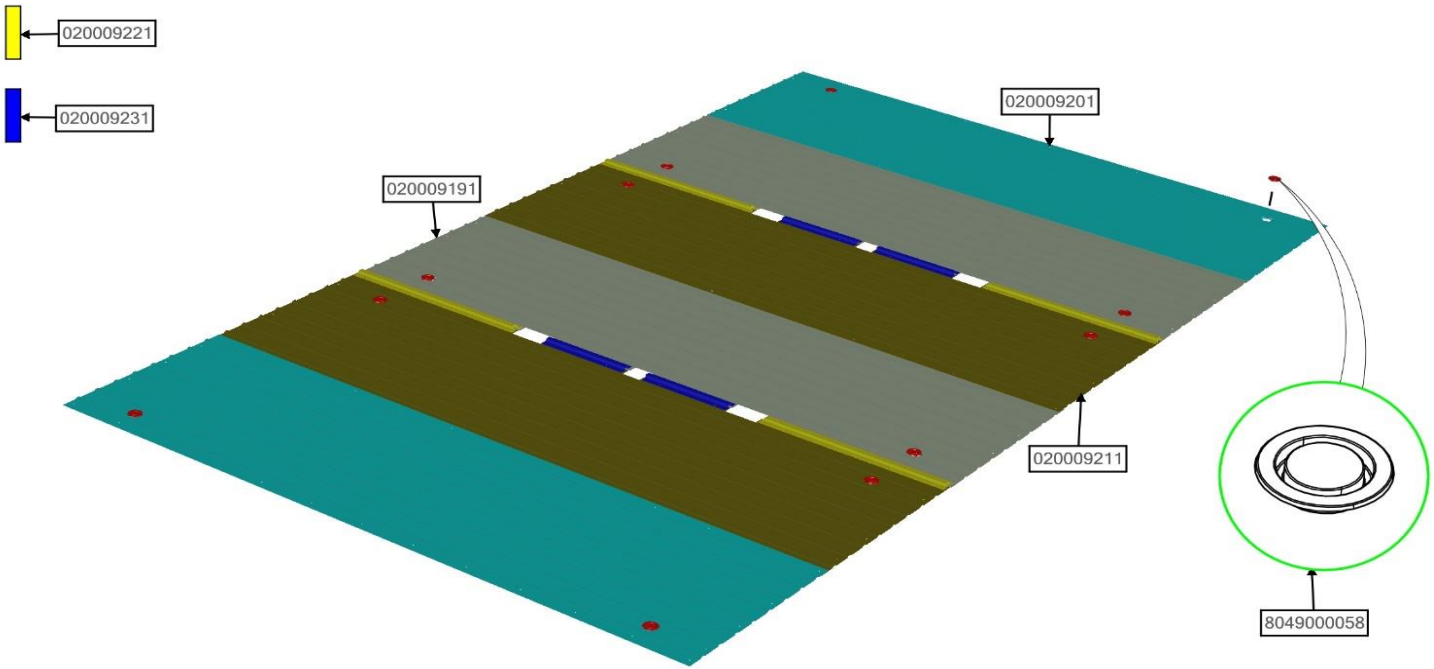


| ASSB_NAME | PART NO. | NAME | QTY |
|---|---|---|---|
| FLOOR ASSY,LUGGAGE COMPARTMENT | 20009191 | STAINLESS STEEL SHEET 01 | 2 |
| | 20009201 | STAINLESS STEEL SHEET 02 | 2 |
| | 20009211 | STAINLESS STEEL SHEET 03 | 2 |
| | 20009221 | OMEGA BULKHEAD 01 | 4 |
| | 20009231 | OMEGA BULKHEAD 02 | 4 |
| | 8049000058 | CUSHION | 12 |
| | | | |

| ASSB_NAME | PART NO. | NAME | QTY |
|---|---|---|---|
| FLOOR ASSY,LUGGAGE COMPARTMENT | | | |
| | | | |
| | | | |
| | | | |
| | | | |
| | | | |
| | | | |

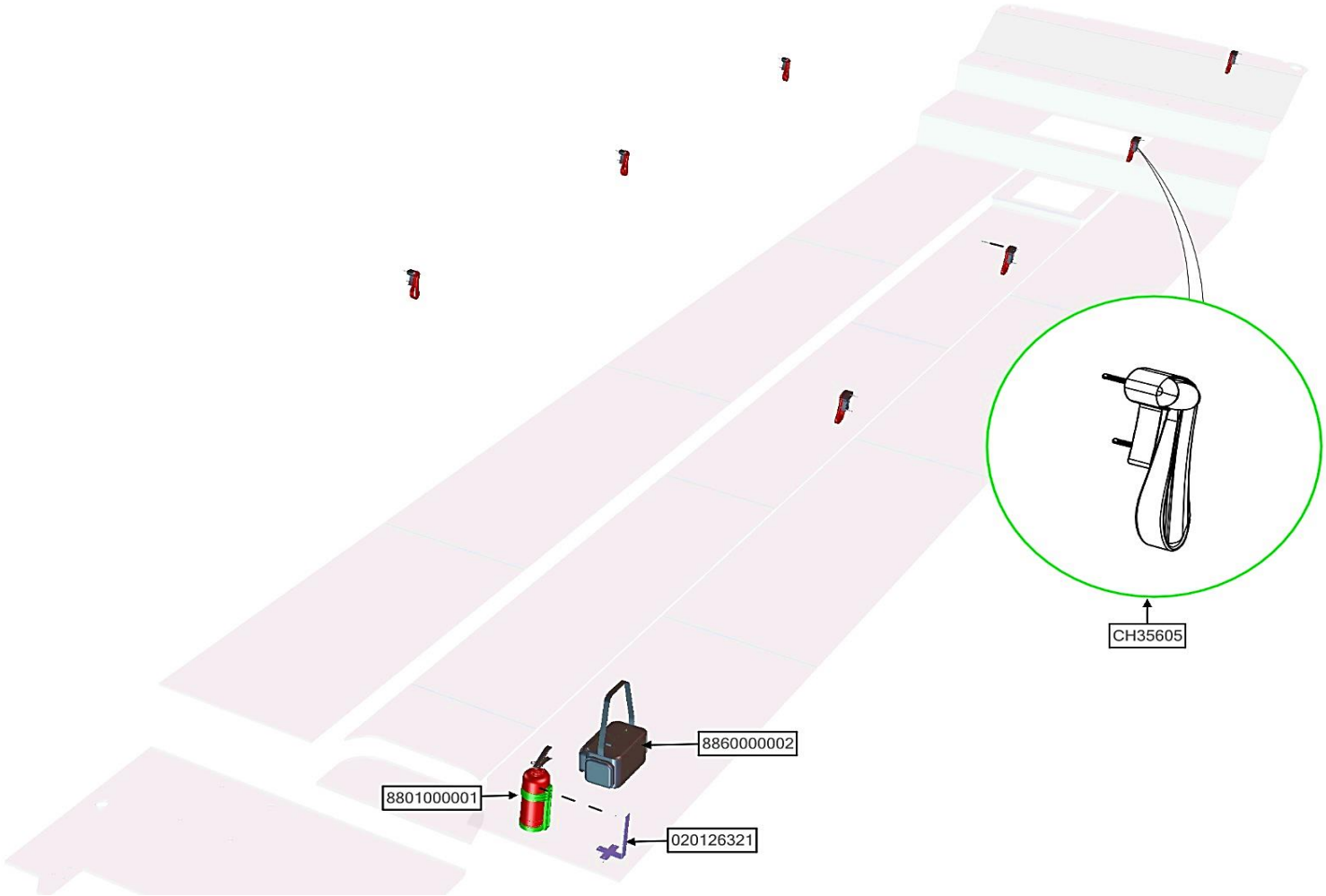


| ASSB_NAME | PART NO. | NAME | QTY |
|---|---|---|---|
| SAFETY SYSTEM | 8801000001 | FIRE EXTINGUISHER | 1 |
| | 020126321 | BRACKET FIRE EXTINGUISHER | 1 |
| | 8860000002 | AMBULANCE BAG | 1 |
| | CH35605 | HAMMER EMERGENCY | 7 |
| | | | |
| | | | |
| | | | |

| ASSB_NAME | PART NO. | NAME | QTY |
|---|---|---|---|
| SAFETY SYSTEM | | | |
| | | | |
| | | | |
| | | | |
| | | | |
| | | | |
| | | | |

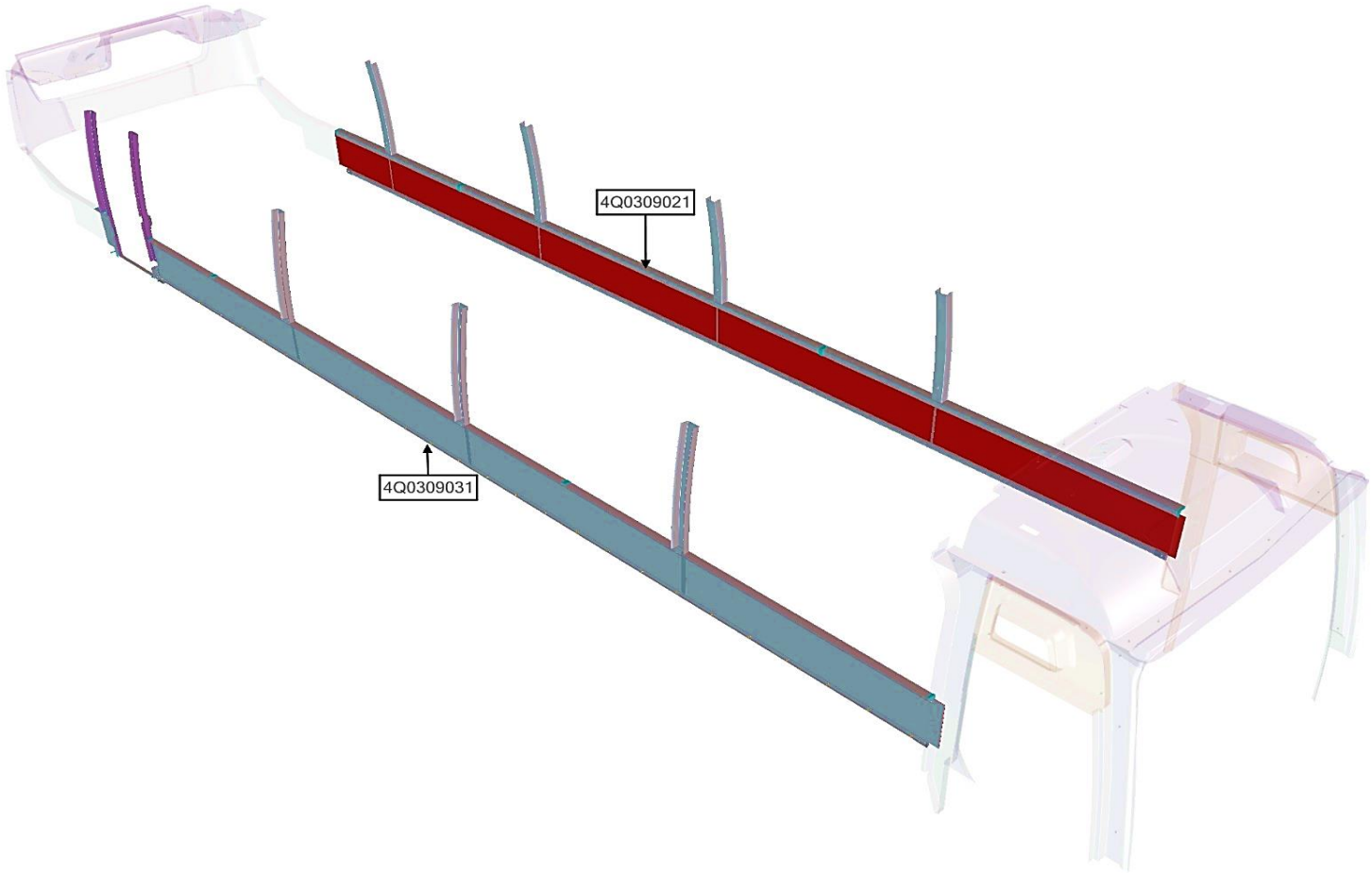


| ASSB_NAME | PART NO. | NAME | QTY |
|---|---|---|---|
| SIDE | 4Q0309031 | SIDE RH | 1 |
| | 4Q0309021 | SIDE LH | 1 |
| | | | |
| | | | |
| | | | |
| | | | |
| | | | |

| ASSB_NAME | PART NO. | NAME | QTY |
|---|---|---|---|
| SIDE | | | |
| | | | |
| | | | |
| | | | |
| | | | |
| | | | |
| | | | |

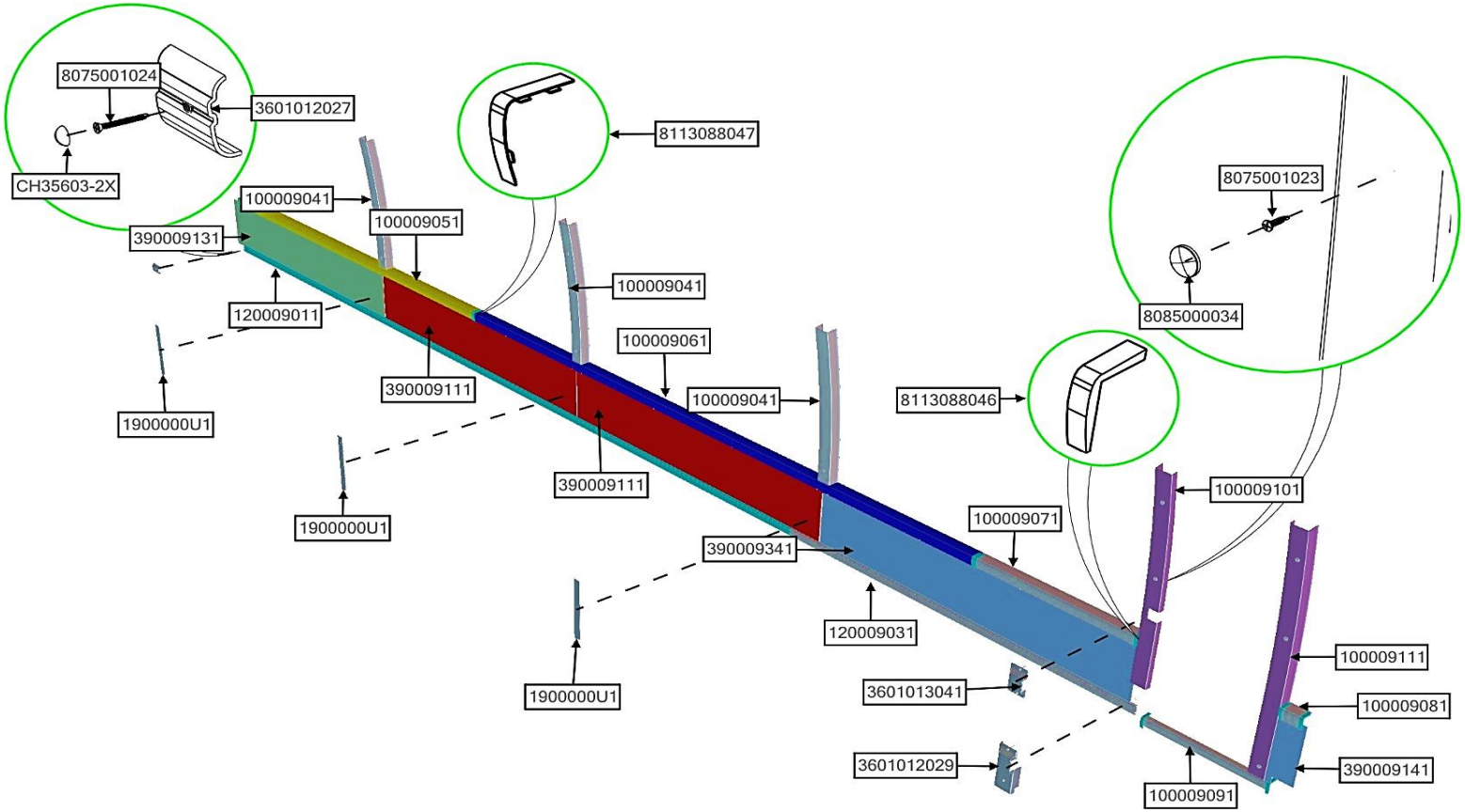


| ASSB_NAME | PART NO. | NAME | QTY |
|---|---|---|---|
| SIDE RH | 100009051 | PILLAR COVER 01 | 1 |
| | 100009061 | PILLAR COVER 02 | 1 |
| | 100009071 | PILLAR COVER 03 | 1 |
| | 3601012027 | SEAT RAIL COVER | 1 |
| | 120009031 | SIDE SEAT RAIL,RH 01 | 1 |
| | 120009011 | SIDE SEAT RAIL,LH 01 | 1 |
| | 390009141 | SIDE PANEL,RH 03 | 1 |

| ASSB_NAME | PART NO. | NAME | QTY |
|---|---|---|---|
| SIDE RH | 390009131 | SIDE PANEL,RH 01 | 1 |
| | 390009341 | SIDE PANEL,RH 04 | 1 |
| | 3601013041 | COVER 01 | 1 |
| | 3601012029 | COVER 02 | 1 |
| | 8075001024 | SCREW 0440 | 1 |
| | CH35603-2X | SCREW COVER | 1 |
| | 8075001023 | SCREW 0420 | 1 |

| ASSB_NAME | PART NO. | NAME | QTY |
|---|---|---|---|
| SIDE RH | 100009101 | PILLAR COVER,VERTICAL 02 | 1 |
| | 100009111 | PILLAR COVER,VERTICAL 03 | 1 |
| | 100009091 | PILLAR COVER | 1 |
| | 100009081 | PILLAR COVER 04 | 1 |
| | 390009111 | SIDE PANEL,LH 02 | 2 |
| | 1900000U1 | SIDE PANEL,RH COVER | 3 |
| | 100009041 | PILLAR COVER,VERTICAL | 3 |
| | 8113088046 | RH HORIZONTAL COVER CONNECTOR | 5 |
| | 8113088047 | LH HORIZONTAL COVER CONNECTOR | 5 |
| | 8085000034 | SCREW COVER | 9 |

| ASSB_NAME | PART NO. | NAME | QTY |
|---|---|---|---|
| SIDE RH | | | |

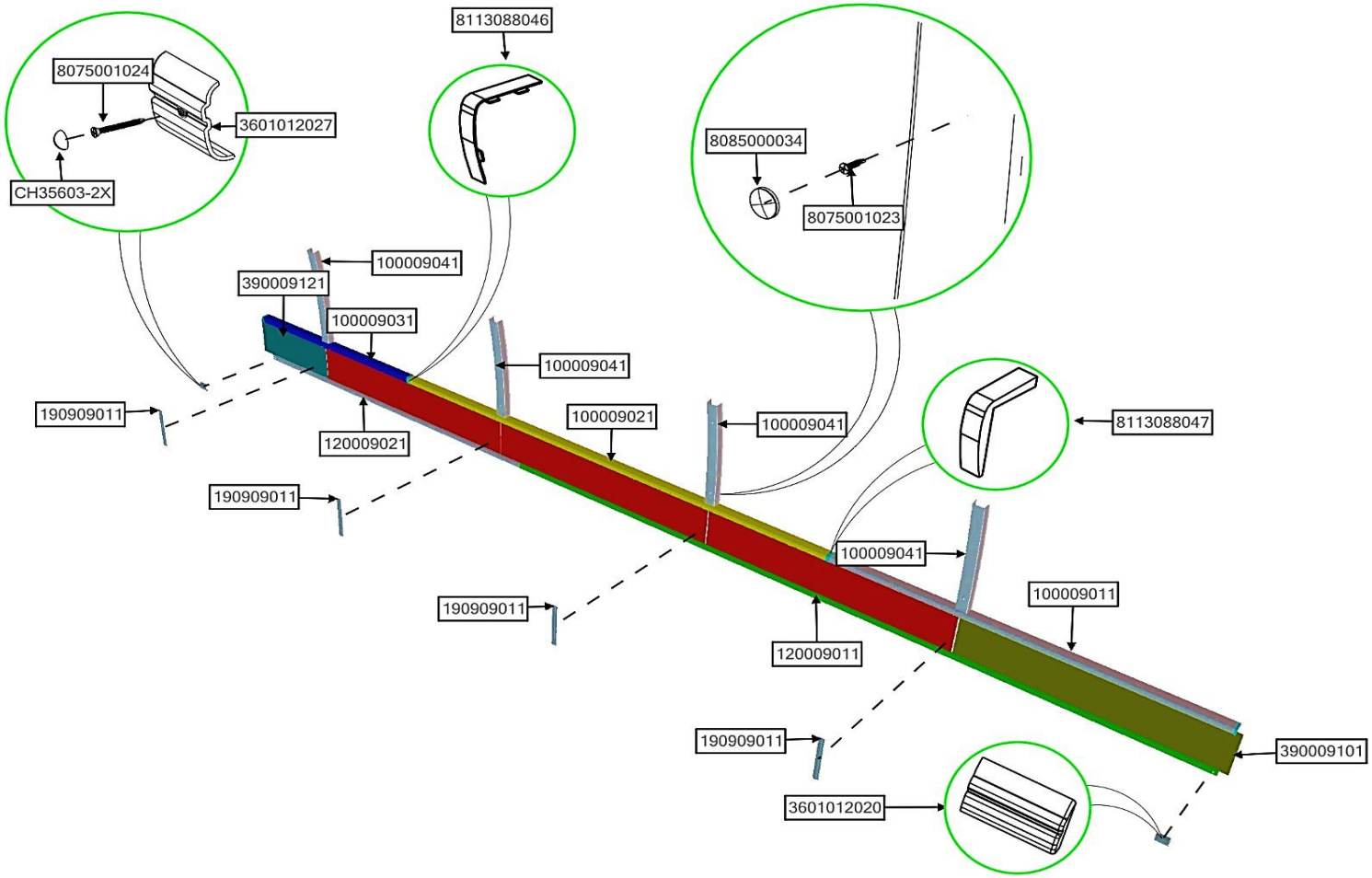


| ASSB_NAME | PART NO. | NAME | QTY |
|---|---|---|---|
| SIDE LH | 3601012027 | SEAT RAIL COVER | 1 |
| | 3601012020 | SEAT RAIL COVER 01 | 1 |
| | CH35603-2X | SCREW COVER | 1 |
| | 8075001024 | SCREW 0440 | 1 |
| | 120009011 | SIDE SEAT RAIL,LH 01 | 1 |
| | 120009021 | SIDE SEAT RAIL,LH 02 | 1 |
| | 390009101 | SIDE PANEL,LH 01 | 1 |

| ASSB_NAME | PART NO. | NAME | QTY |
|---|---|---|---|
| SIDE LH | 390009121 | SIDE PANEL,LH 03 | 1 |
| | ND-VITDU00-041500-00295 | SCREW 0415 | 1 |
| | 8075001023 | SCREW 0420 | 1 |
| | 100009011 | PILLAR COVER 01 | 1 |
| | 100009021 | PILLAR COVER 02 | 1 |
| | 100009031 | PILLAR COVER 03 | 1 |
| | 390009111 | SIDE PANEL,LH 02 | 3 |

| ASSB_NAME | PART NO. | NAME | QTY |
|---|---|---|---|
| SIDE LH | 8113088046 | RH HORIZONTAL COVER CONNECTOR | 3 |
| | 8113088047 | LH HORIZONTAL COVER CONNECTOR | 3 |
| | 190909011 | SIDE PANEL,LH COVER | 4 |
| | 100009041 | PILLAR COVER | 4 |
| | 8085000034 | SCREW COVER | 5 |

| ASSB_NAME | PART NO. | NAME | QTY |
|---|---|---|---|
| SIDE LH | | | |

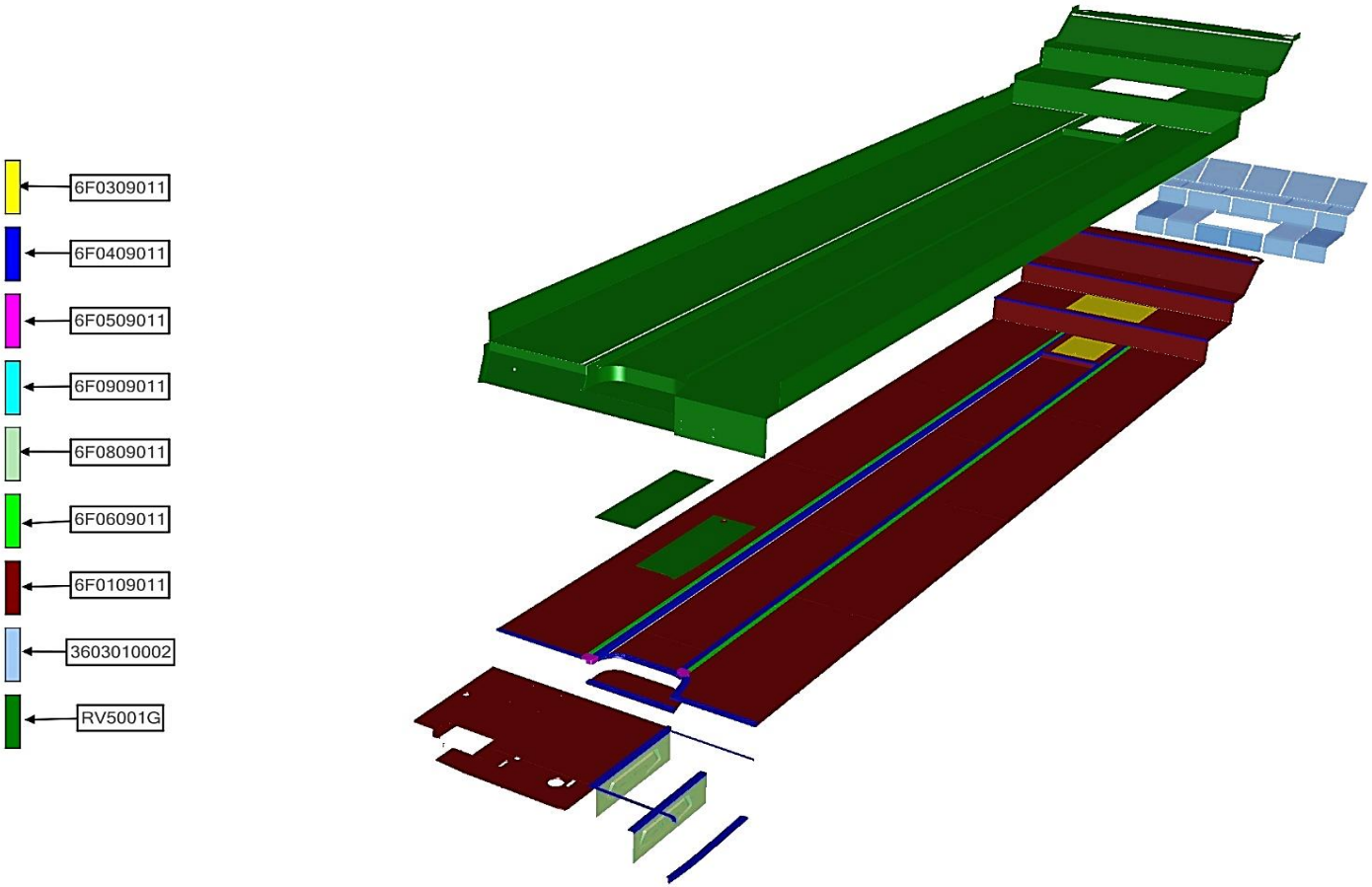


| ASSB_NAME | PART NO. | NAME | QTY |
|---|---|---|---|
| FLOOR ASSY | 6F0309011 | HATCHES - ASSY | 1 |
| | 6F0409011 | FLOOR SPLINT | 1 |
| | 6F0509011 | COVER ASSY,FLOOR SPLINT | 1 |
| | 6F0909011 | COVER ASSY, AISLE LIGHTS | 1 |
| | 6F0609011 | SLIDING RAIL ASSY,SEAT | 1 |
| | RV5001G | FLOOR SIMILI | 1 |
| | 6F0809011 | COVER ASSY, STEP | 1 |

| ASSB_NAME | PART NO. | NAME | QTY |
|---|---|---|---|
| FLOOR ASSY | 3603010002 | FLOOR INSULATION | 1 |
| | 6F0109011 | FLOORING BOARD - ASSY | 1 |
| | | | |
| | | | |
| | | | |
| | | | |
| | | | |

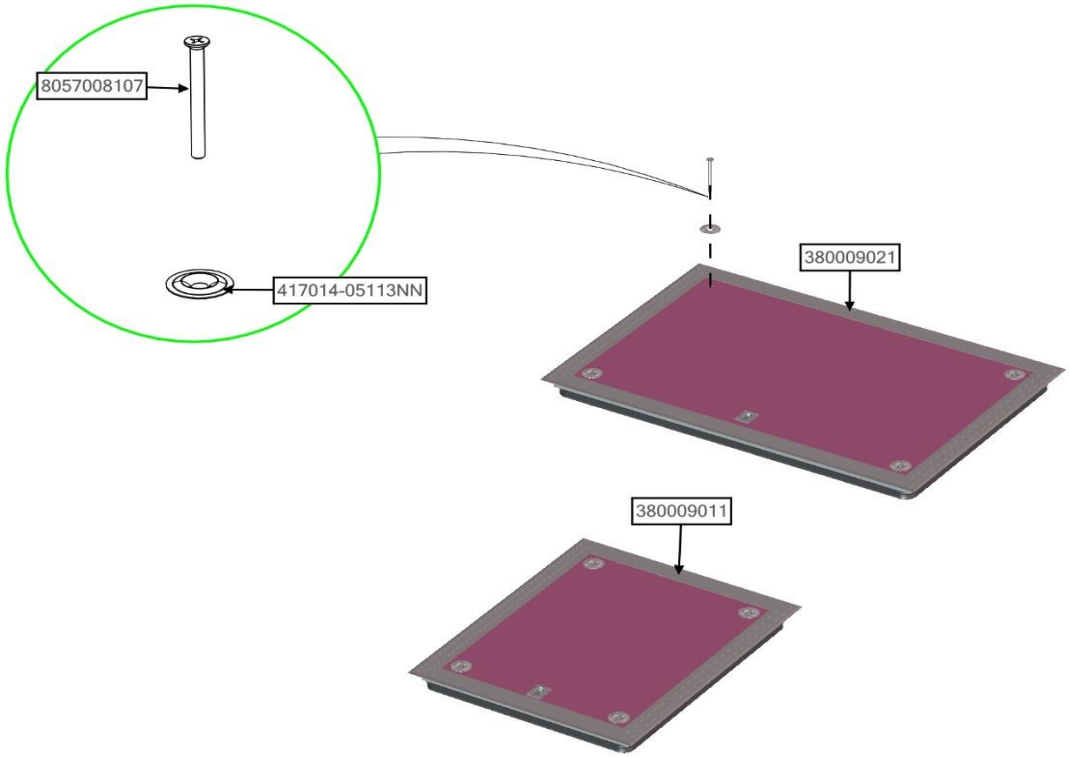


| ASSB_NAME | PART NO. | NAME | QTY |
|---|---|---|---|
| HATCHES ASSY | 380009011 | TRANSMISSION CHECKING HATCHES | 1 |
| | 380009021 | ENGINE CHECKING HATCHES | 1 |
| | 8057008107 | BOLT 08080125 | 8 |
| | 417014-05113NN | CHECKING HATCHES WASHER | 8 |
| | | | |
| | | | |
| | | | |

| ASSB_NAME | PART NO. | NAME | QTY |
|---|---|---|---|
| HATCHES ASSY | | | |
| | | | |
| | | | |
| | | | |
| | | | |
| | | | |
| | | | |

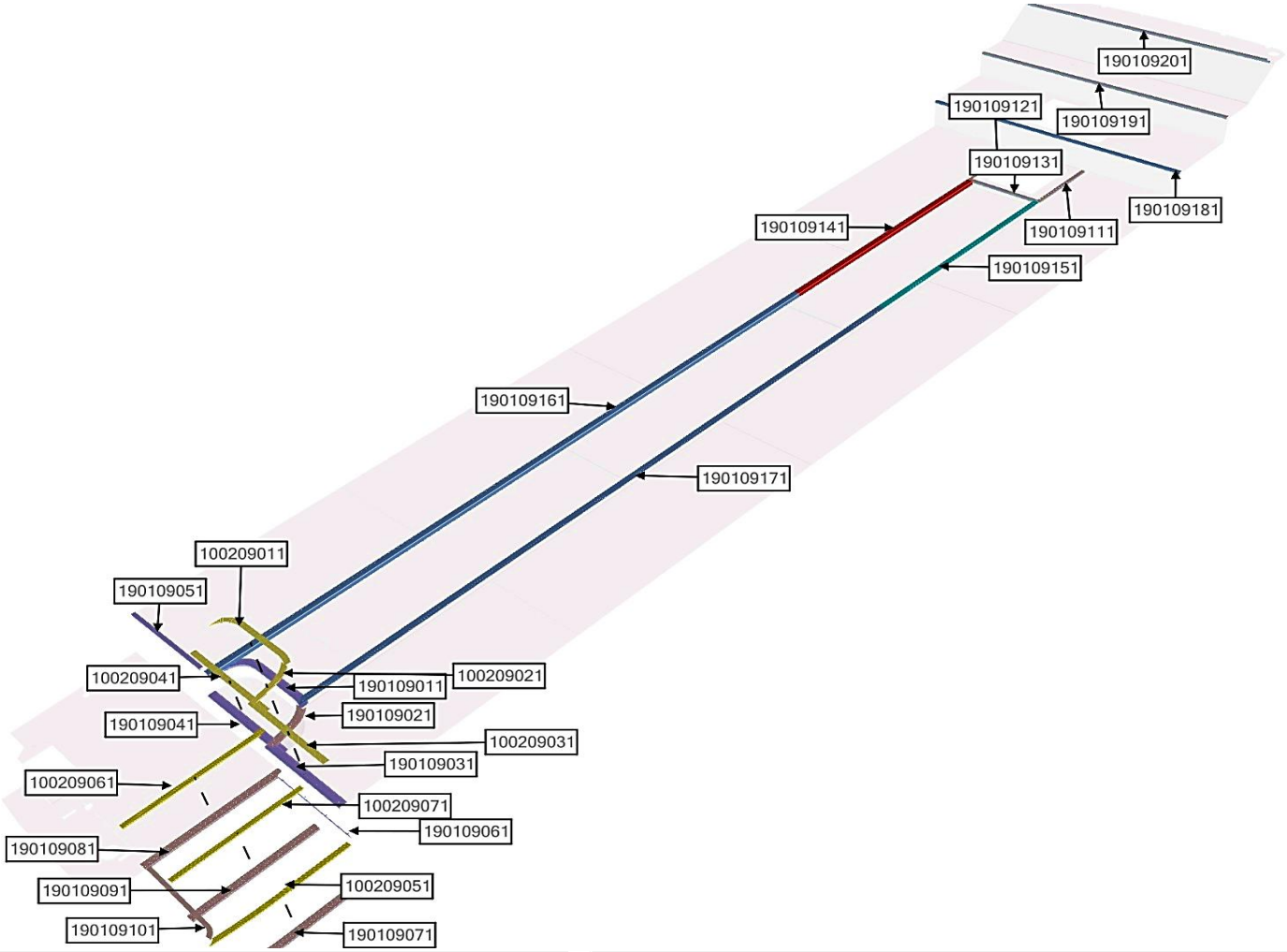


| ASSB_NAME | PART NO. | NAME | QTY |
|---|---|---|---|
| FLOOR SPLINT ASSY | 190109191 | FLOOR SPLINT ASSY,BACK SEAT 02 | 1 |
| | 190109011 | ALUMINIUM SPLINT,STEP 1 | 1 |
| | 190109031 | ALUMINIUM SPLINT,STEP 03 | 1 |
| | 190109051 | ALUMINIUM SPLINT,STEP 5 | 1 |
| | 190109061 | ALUMINIUM SPLINT,STEP 6 | 1 |
| | 100209061 | STEP STAIRCASE COVER 08 | 1 |
| | 100209071 | STEP STAIRCASE COVER 09 | 1 |

| ASSB_NAME | PART NO. | NAME | QTY |
|---|---|---|---|
| FLOOR SPLINT ASSY | 100209051 | ALUMINIUM SPLINT COVER,STEP 07 | 1 |
| | 100209031 | ALUMINIUM SPLINT COVER, STEP 3 | 1 |
| | 100209011 | ALUMINIUM SPLINT COVER,STEP 01 | 1 |
| | 100209041 | ALUMINIUM SPLINT COVER,STEP 4 | 1 |
| | 190109201 | FLOOR SPLINT, BACK SEAT 03 | 1 |
| | 100209021 | ALUMINIUM SPLINT COVER,STEP 02 | 1 |
| | 190109151 | ALUMINIUM SPLINT,MAIN FLOOR 05 | 1 |

| ASSB_NAME | PART NO. | NAME | QTY |
|---|---|---|---|
| FLOOR SPLINT ASSY | 190109141 | ALUMINIUM SPLINT,MAIN FLOOR 04 | 1 |
| | 190109111 | ALUMINIUM SPLINT,MAIN FLOOR 1 | 1 |
| | 190109161 | ALUMINIUM SPLINT,MAIN FLOOR 6 | 1 |
| | 190109171 | ALUMINIUM SPLINT,MAIN FLOOR 07 | 1 |
| | 190109121 | ALUMINIUM SPLINT,MAIN FLOOR 2 | 1 |
| | 190109131 | ALUMINIUM SPLINT,MAIN FLOOR 03 | 1 |
| | 190109181 | FLOOR SPLINT, BACK SEAT 01 | 1 |
| | 190109081 | ALUMINIUM SPLINT,STEP 08 | 1 |
| | 190109091 | STEP SPLINT 09 | 1 |
| | 190109101 | ALUMINIUM SPLINT,STEP 10 | 1 |
| | 190109071 | ALUMINIUM SPLINT,STEP 7 | 1 |
| | 190109021 | ALUMINIUM SPLINT,STEP 02 | 1 |
| | 190109041 | ALUMINIUM SPLINT,STEP 04 | 1 |

| ASSB_NAME | PART NO. | NAME | QTY |
|---|---|---|---|
| FLOOR SPLINT ASSY | | | |

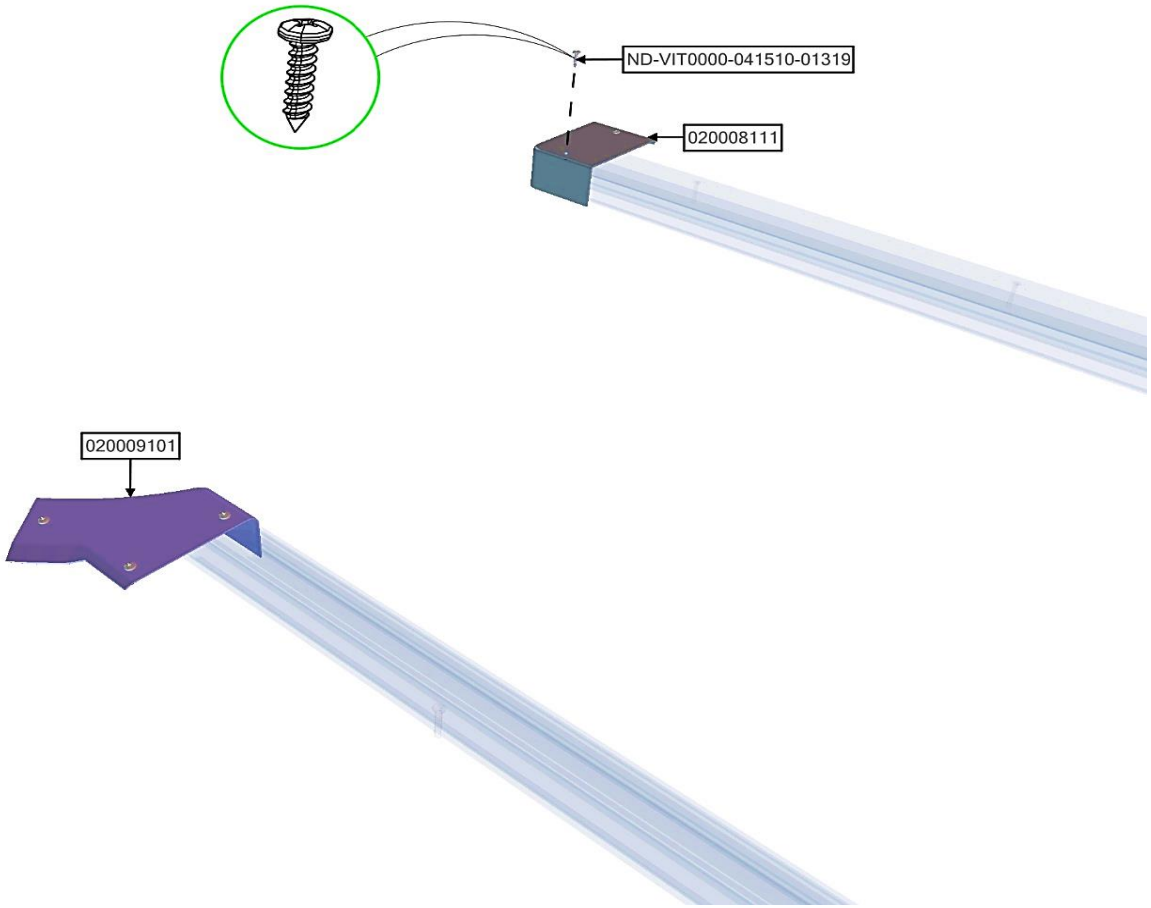


| ASSB_NAME | PART NO. | NAME | QTY |
|---|---|---|---|
| FLOOR SPLINT COVER ASSY | 020008111 | STAIRS SPLINT COVER 02 | 1 |
| | 020009101 | STAIRS SPLINT COVER 01 | 1 |
| | ND-VIT0000-041510-01319 | SCREW 0415 | 1 |
| | | | |
| | | | |
| | | | |
| | | | |

| ASSB_NAME | PART NO. | NAME | QTY |
|---|---|---|---|
| FLOOR SPLINT COVER ASSY | | | |
| | | | |
| | | | |
| | | | |
| | | | |
| | | | |
| | | | |

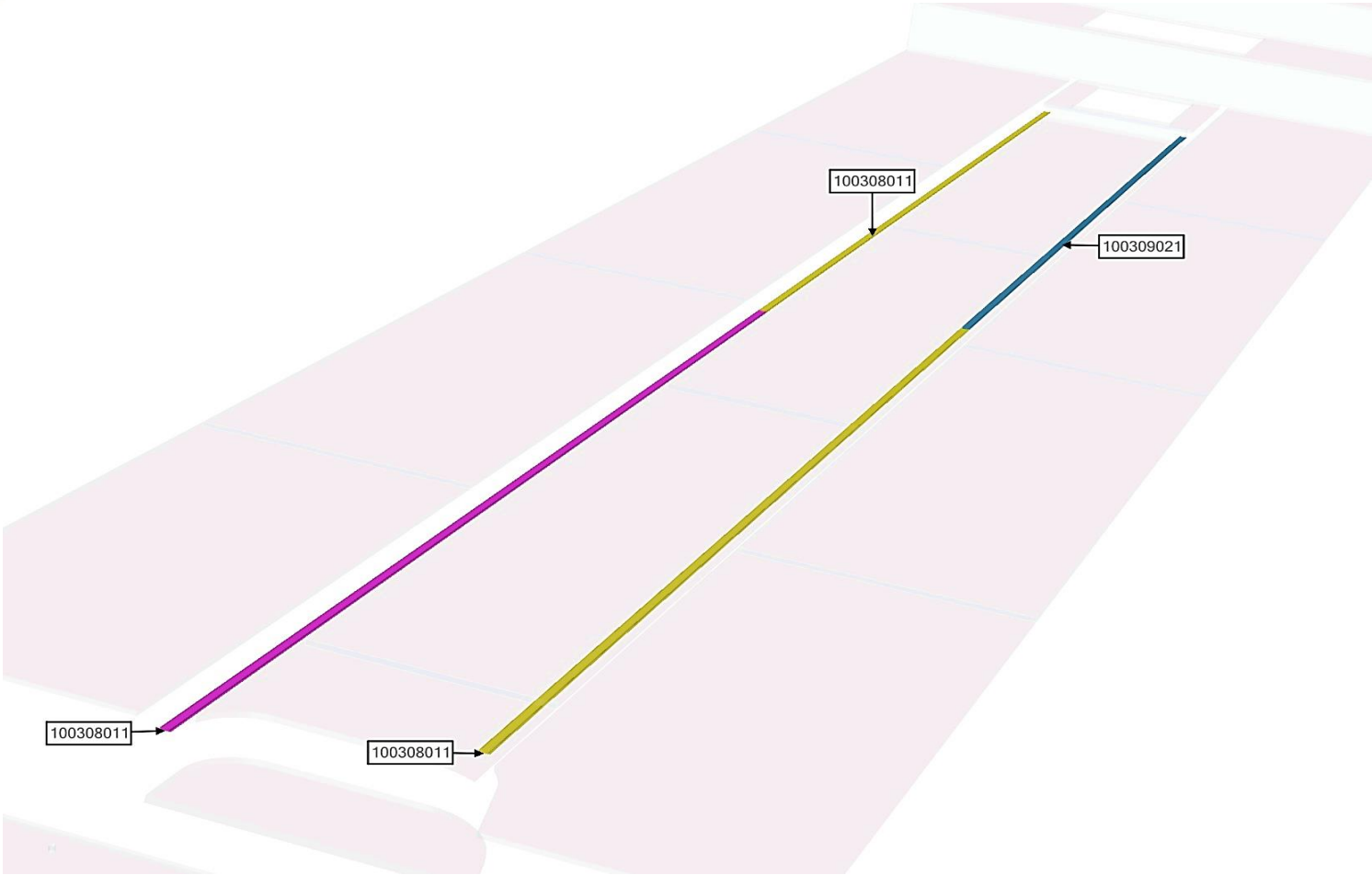


| ASSB_NAME | PART NO. | NAME | QTY |
|---|---|---|---|
| COVER ASSY, AISLE LIGHTS | 100309021 | AISLE LIGHTS COVER 02 | 1 |
| | 100308011 | AISLE LIGHTS COVER 01 | 3 |
| | | | |
| | | | |
| | | | |
| | | | |
| | | | |

| ASSB_NAME | PART NO. | NAME | QTY |
|---|---|---|---|
| COVER ASSY, AISLE LIGHTS | | | |
| | | | |
| | | | |
| | | | |
| | | | |
| | | | |
| | | | |

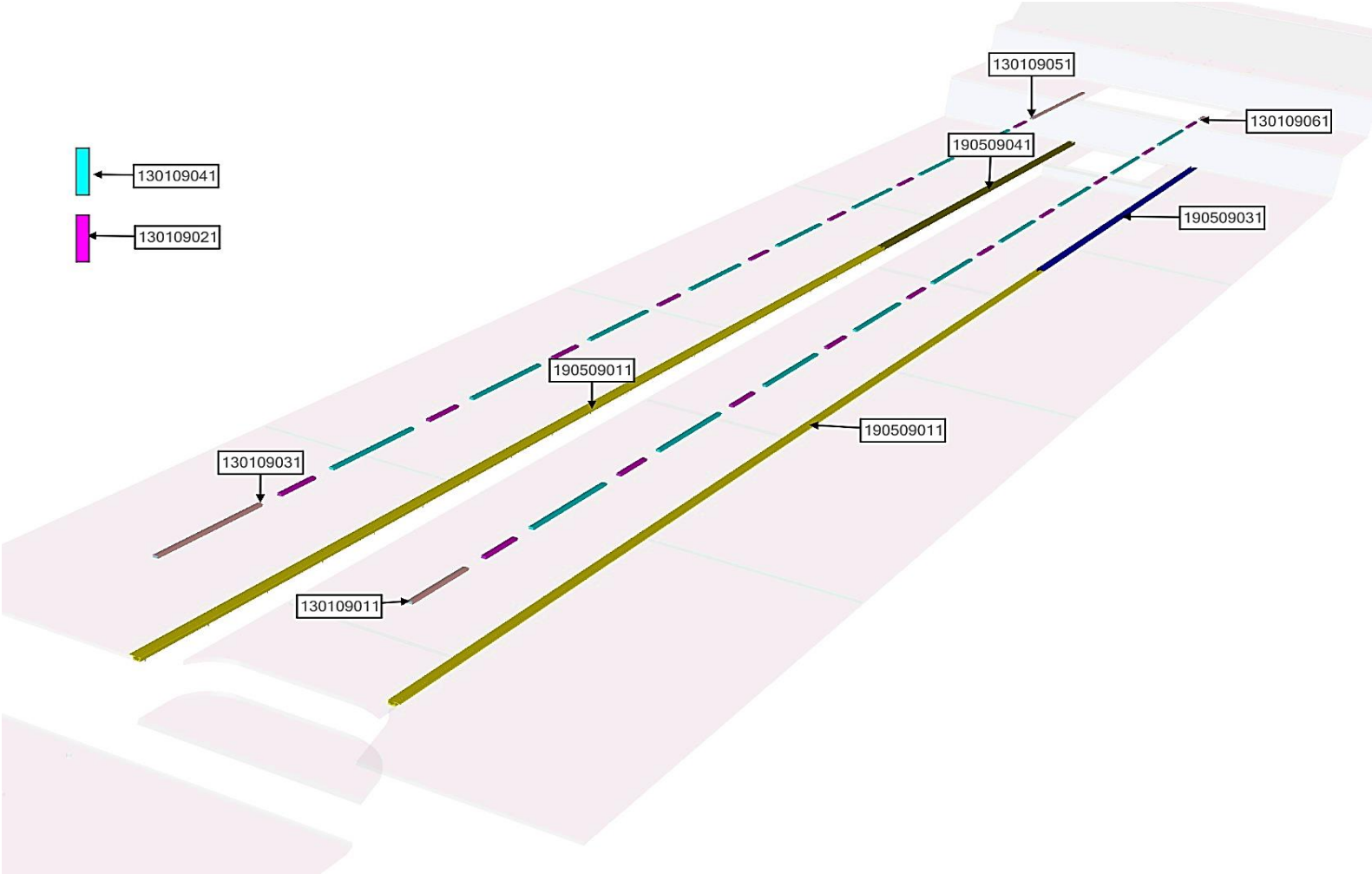


| ASSB_NAME | PART NO. | NAME | QTY |
|---|---|---|---|
| SEAT RAIL ASSY | 190509031 | SEAT RAIL SPLINT 2 | 1 |
| | 190509041 | SEAT RAIL SPLINT 03 | 1 |
| | 130109011 | FLOOR SEAT RAIL RUBBER 01 | 1 |
| | 130109031 | FLOOR SEAT RAIL RUBBER 03 | 1 |
| | 130109051 | FLOOR SEAT RAIL RUBBER 05 | 1 |
| | 130109061 | FLOOR SEAT RAIL RUBBER 06 | 1 |
| | 190509011 | SEAT RAIL SPLINT 01 | 2 |

| ASSB_NAME | PART NO. | NAME | QTY |
|---|---|---|---|
| SEAT RAIL ASSY | 130109041 | FLOOR SEAT RAIL RUBBER 04 | 17 |
| | 130109021 | FLOOR SEAT RAIL RUBBER 02 | 19 |
| | | | |
| | | | |
| | | | |
| | | | |
| | | | |

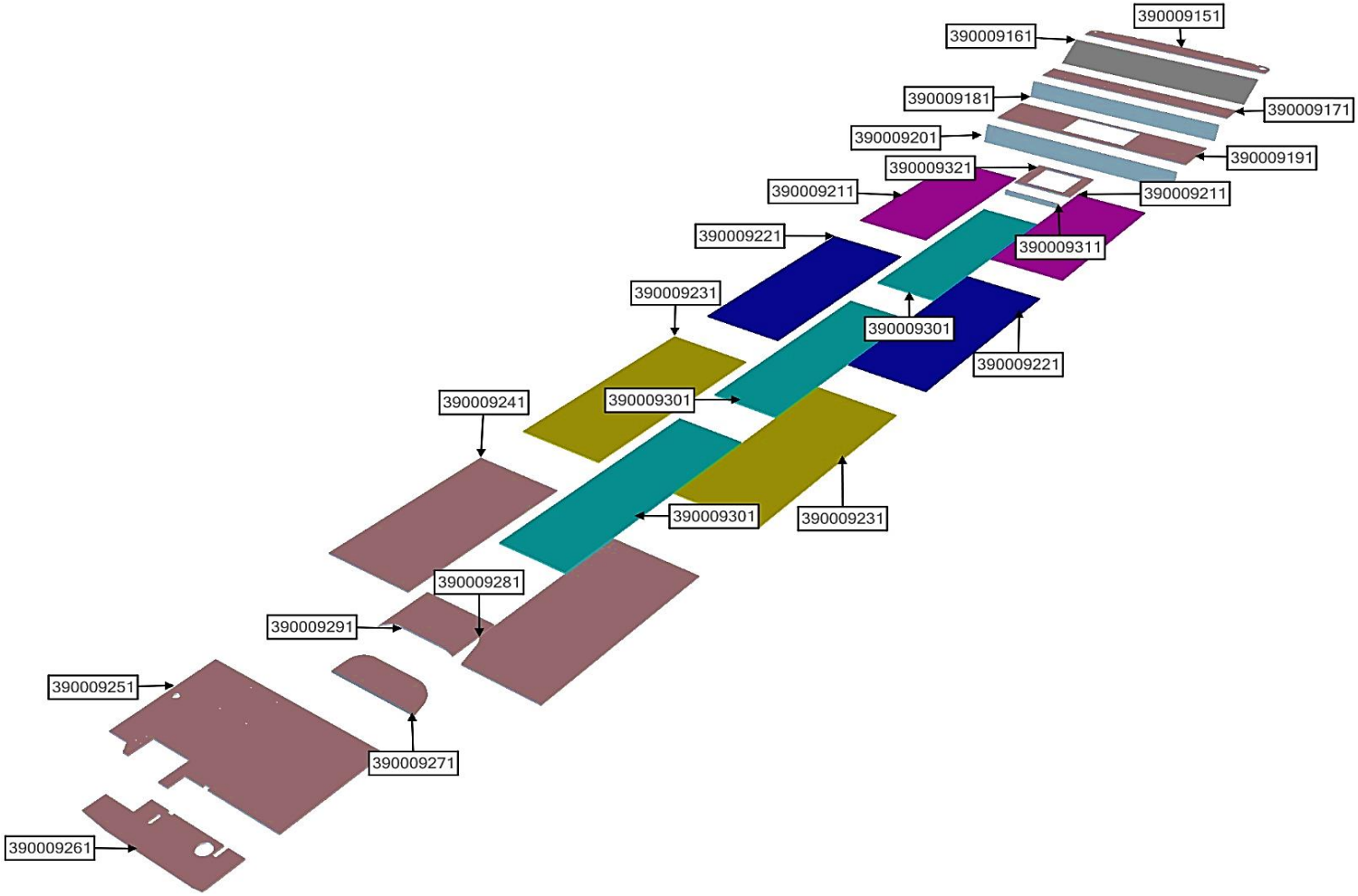


| ASSB_NAME | PART NO. | NAME | QTY |
|---|---|---|---|
| FLOORING BOARD ASSY | 390009281 | FLOORING BOARD 14 | 1 |
| | 390009311 | FLOORING BOARD 17 | 1 |
| | 390009201 | FLOORING BOARD 06 | 1 |
| | 390009191 | FLOORING BOARD 05 | 1 |
| | 390009241 | FLOORING BOARD 10 | 1 |
| | 390009181 | FLOORING BOARD 04 | 1 |
| | 390009171 | FLOORING BOARD 03 | 1 |

| ASSB_NAME | PART NO. | NAME | QTY |
|---|---|---|---|
| FLOORING BOARD ASSY | 390009161 | FLOORING BOARD 02 | 1 |
| | 390009151 | FLOORING BOARD 01 | 1 |
| | 390009291 | FLOORING BOARD 15 | 1 |
| | 390009271 | FLOORING BOARD 13 | 1 |
| | 390009251 | FLOORING BOARD 11 | 1 |
| | 390009261 | FLOORING BOARD 12 | 1 |
| | 390009321 | FLOORING BOARD 18 | 1 |

| ASSB_NAME | PART NO. | NAME | QTY |
|---|---|---|---|
| FLOORING BOARD ASSY | 390009231 | FLOORING BOARD 09 | 2 |
| | 390009211 | FLOORING BOARD 07 | 2 |
| | 390009221 | FLOORING BOARD 08 | 2 |
| | 390009301 | FLOORING BOARD 16 | 3 |

| ASSB_NAME | PART NO. | NAME | QTY |
|---|---|---|---|
| FLOORING BOARD ASSY | | | |

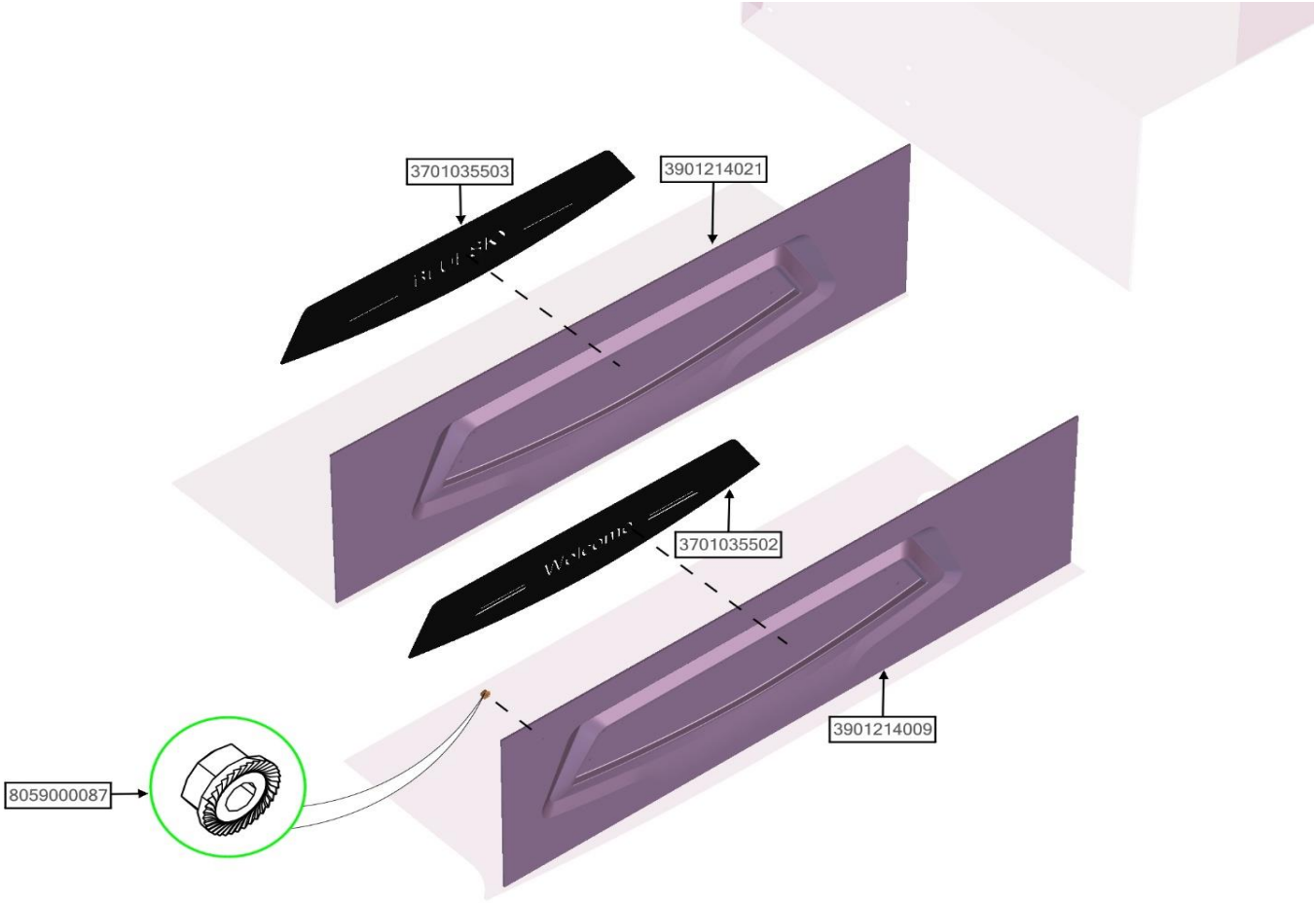


| ASSB_NAME | PART NO. | NAME | QTY |
|---|---|---|---|
| STAIRS COVER | 8059000087 | NUT 06100 | 1 |
| | 3901214009 | STAIRS COVER 02 | 1 |
| | 3901214021 | STAIRS COVER 01 | 1 |
| | 3701035502 | STAIRS COVER GLASS 01 | 1 |
| | 3701035503 | STAIRS COVER GLASS 02 | 1 |
| | | | |
| | | | |

| ASSB_NAME | PART NO. | NAME | QTY |
|---|---|---|---|
| STAIRS COVER | | | |
| | | | |
| | | | |
| | | | |
| | | | |
| | | | |
| | | | |

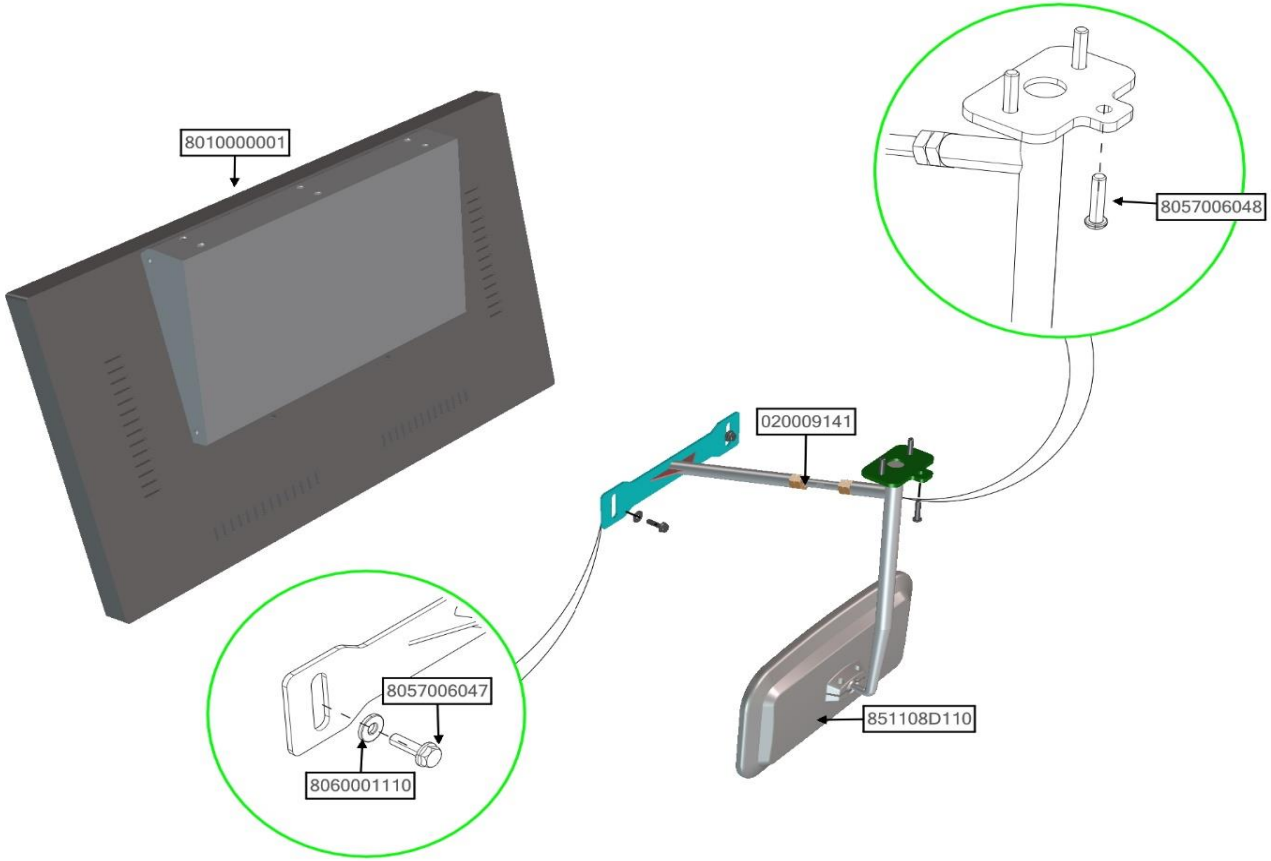


| ASSB_NAME | PART NO. | NAME | QTY |
|---|---|---|---|
| FUNCTIONAL SYSTEM | 8010000001 | LCD 32 INCH | 1 |
| | 020009141 | BRACKET | 1 |
| | 851108D110 | REAR-VIEW MIRROR,CABIN | 1 |
| | 8057006047 | BOLT 06020100 | 2 |
| | 8060001110 | WASHER Ø06 | 2 |
| | 8057006048 | BOLT 06025100 | 3 |
| | | | |

| ASSB_NAME | PART NO. | NAME | QTY |
|---|---|---|---|
| FUNCTIONAL SYSTEM | | | |
| | | | |
| | | | |
| | | | |
| | | | |
| | | | |
| | | | |

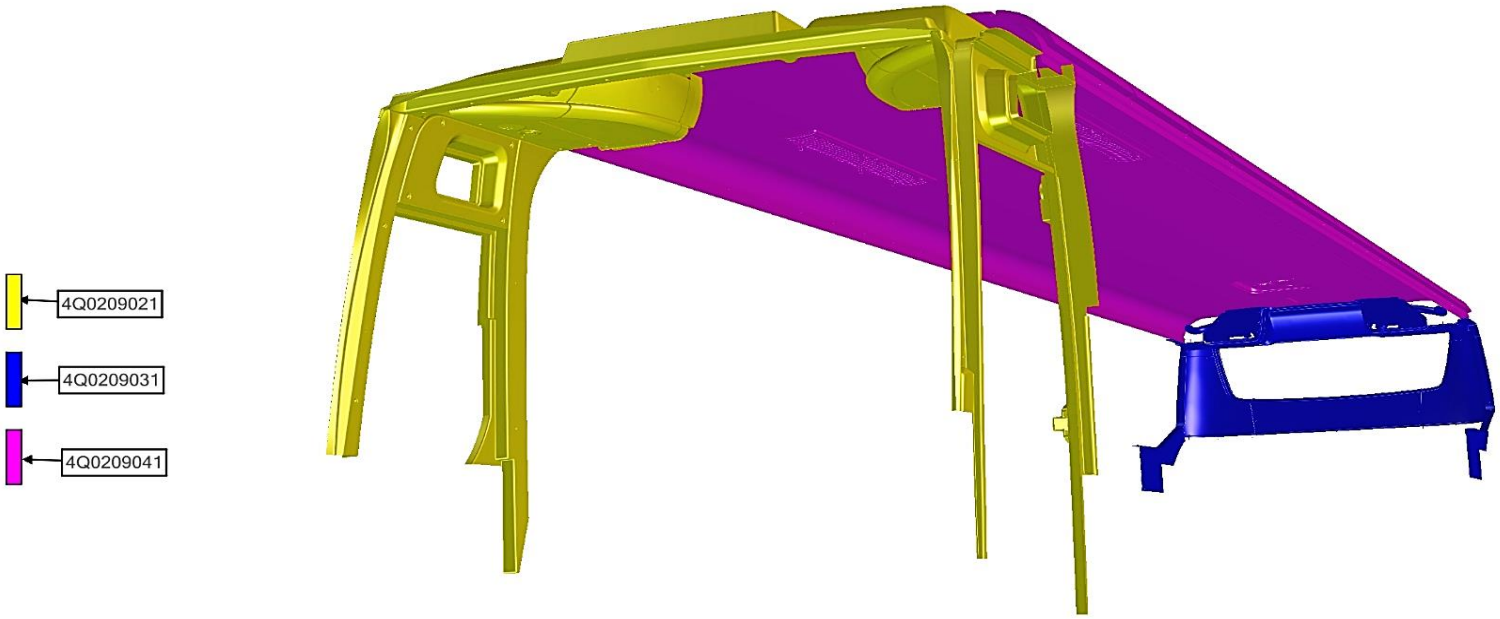


| ASSB_NAME | PART NO. | NAME | QTY |
|---|---|---|---|
| CEILING | 4Q0209021 | FRONT HEADLINING ASSY | 1 |
| | 4Q0209031 | REAR HEADLINING ASSY | 1 |
| | 4Q0209041 | MIDDLE CEILING | 1 |
| | | | |
| | | | |
| | | | |
| | | | |

| ASSB_NAME | PART NO. | NAME | QTY |
|---|---|---|---|
| CEILING | | | |
| | | | |
| | | | |
| | | | |
| | | | |
| | | | |
| | | | |

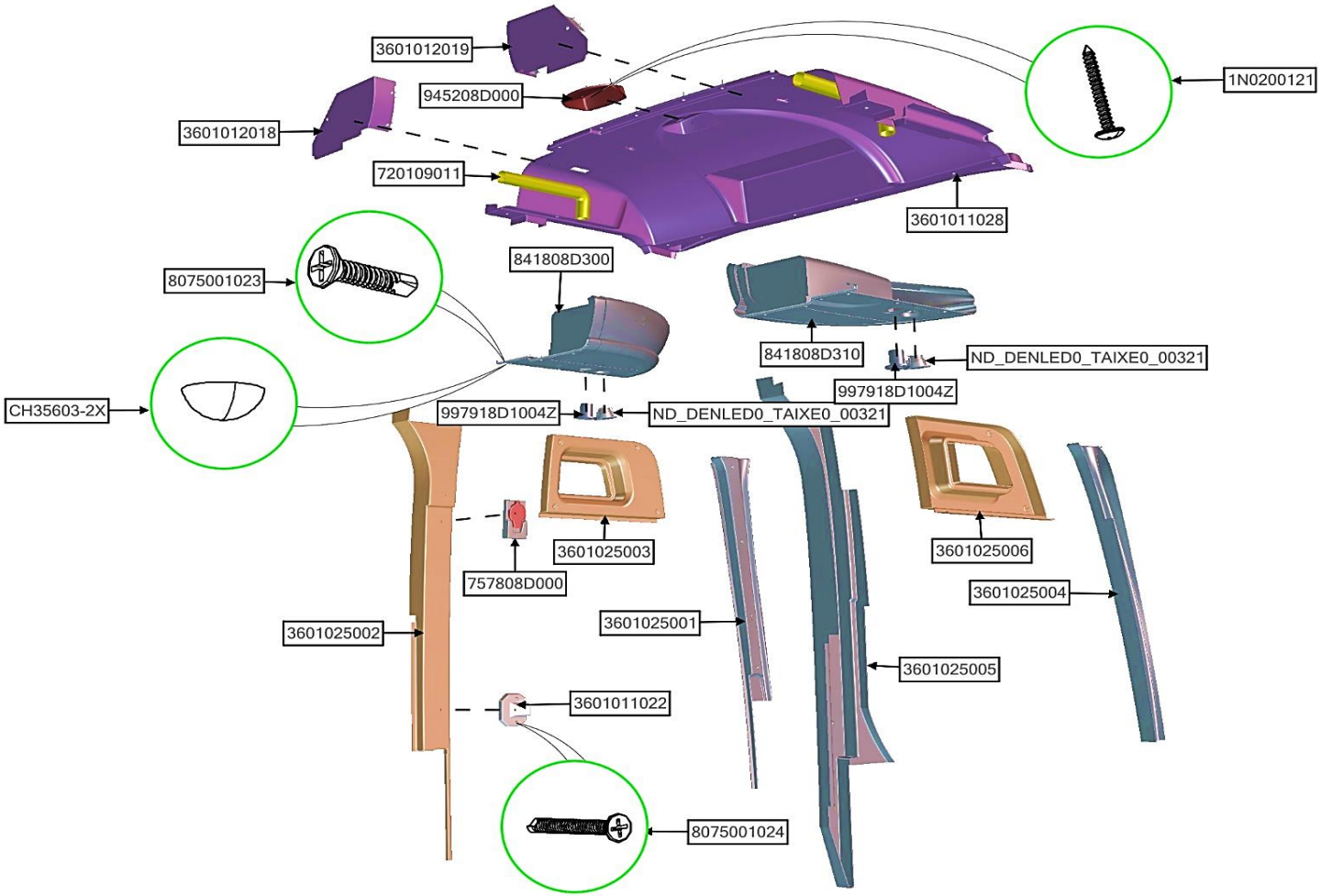


| ASSB_NAME | PART NO. | NAME | QTY |
|---|---|---|---|
| FRONT HEADLINING ASSY | 3601025005 | DRIVER DOOR REAR COVER | 1 |
| | 757808D000 | COVER,E/VALVE | 1 |
| | 3601011022 | COVER,DOOR CYL | 1 |
| | 3601025003 | GARNISH COVER,LH | 1 |
| | 3601025002 | GUEST DOOR REAR PILLAR | 1 |
| | 3601025001 | WINDSHIELD COVER, LH | 1 |
| | 841808D300 | HOLDALL ASSEMBLY,LH | 1 |

| ASSB_NAME | PART NO. | NAME | QTY |
|---|---|---|---|
| FRONT HEADLINING ASSY | 841808D310 | HOLDALL ASSEMBLY,RH | 1 |
| | 8075001023 | SCREW 0420 | 1 |
| | 1N0200121 | SCREW 0430 | 1 |
| | 8075001024 | SCREW 0440 | 1 |
| | CH35603-2X | SCREW COVER | 1 |
| | 945208D000 | CLOCK | 1 |
| | 3601011028 | FRONT HEADLINING | 1 |

| ASSB_NAME | PART NO. | NAME | QTY |
|---|---|---|---|
| FRONT HEADLINING ASSY | 3601012019 | RH LUGGAGE SHELVES COVER | 1 |
| | 3601012018 | LH LUGGAGE SHELVES COVER | 1 |
| | 3601025006 | GARNISH COVER,RH | 1 |
| | 3601025004 | WINDSHIELD COVER, RH | 1 |
| | 997918D1004Z | HEADLINING WIND DOOR | 2 |
| | ND_DENLED0_TAIXE0_00321 | HEADLINING LIGHTS | 2 |
| | 720109011 | FLEXIBLE PIPE 01 | 2 |

| ASSB_NAME | PART NO. | NAME | QTY |
|---|---|---|---|
| FRONT HEADLINING ASSY | | | |

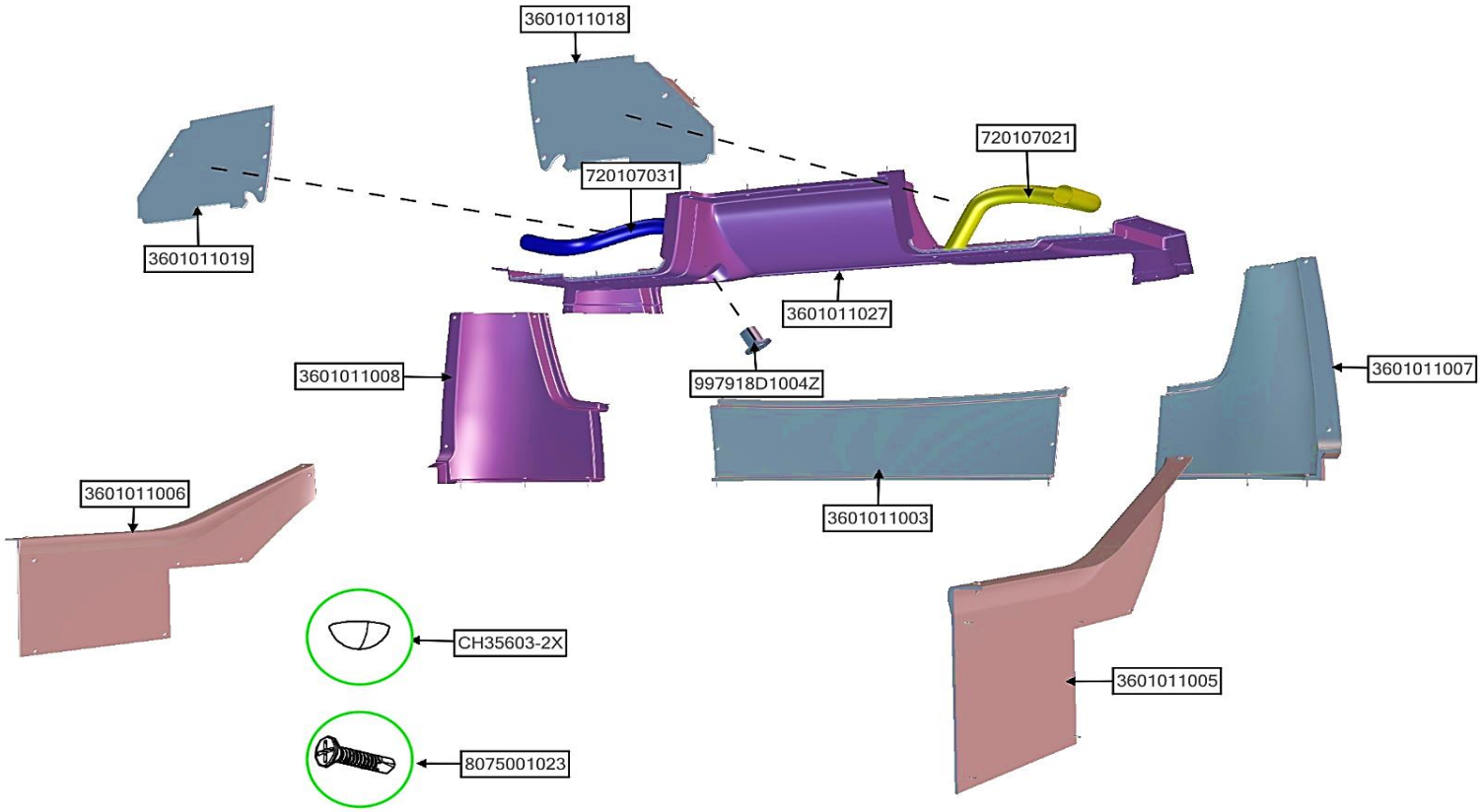


| ASSB_NAME | PART NO. | NAME | QTY |
|---|---|---|---|
| REAR HEADLINING ASSY | 720107021 | FLEXIBLE PIPE 02 | 1 |
| | 720107031 | FLEXIBLE PIPE 03 | 1 |
| | 8075001023 | SCREW 0420 | 1 |
| | CH35603-2X | SCREW COVER | 1 |
| | 3601011027 | REAR HEADLINING | 1 |
| | 3601011019 | SHELVES BOARD,RH | 1 |
| | 3601011018 | SHELVES BOARD,LH | 1 |

| ASSB_NAME | PART NO. | NAME | QTY |
|---|---|---|---|
| REAR HEADLINING ASSY | 3601011006 | REAR HEADLINING SIDE COVER, RH | 1 |
| | 3601011005 | REAR HEADLINING SIDE COVER, LH | 1 |
| | 3601011003 | REAR HEADLINING COVER, CTR | 1 |
| | 3601011008 | REAR HEADLINING COVER ,RH | 1 |
| | 3601011007 | REAR HEADLINING COVER, LH | 1 |
| | 997918D1004Z | HEADLINING WIND DOOR | 2 |
| | | | |

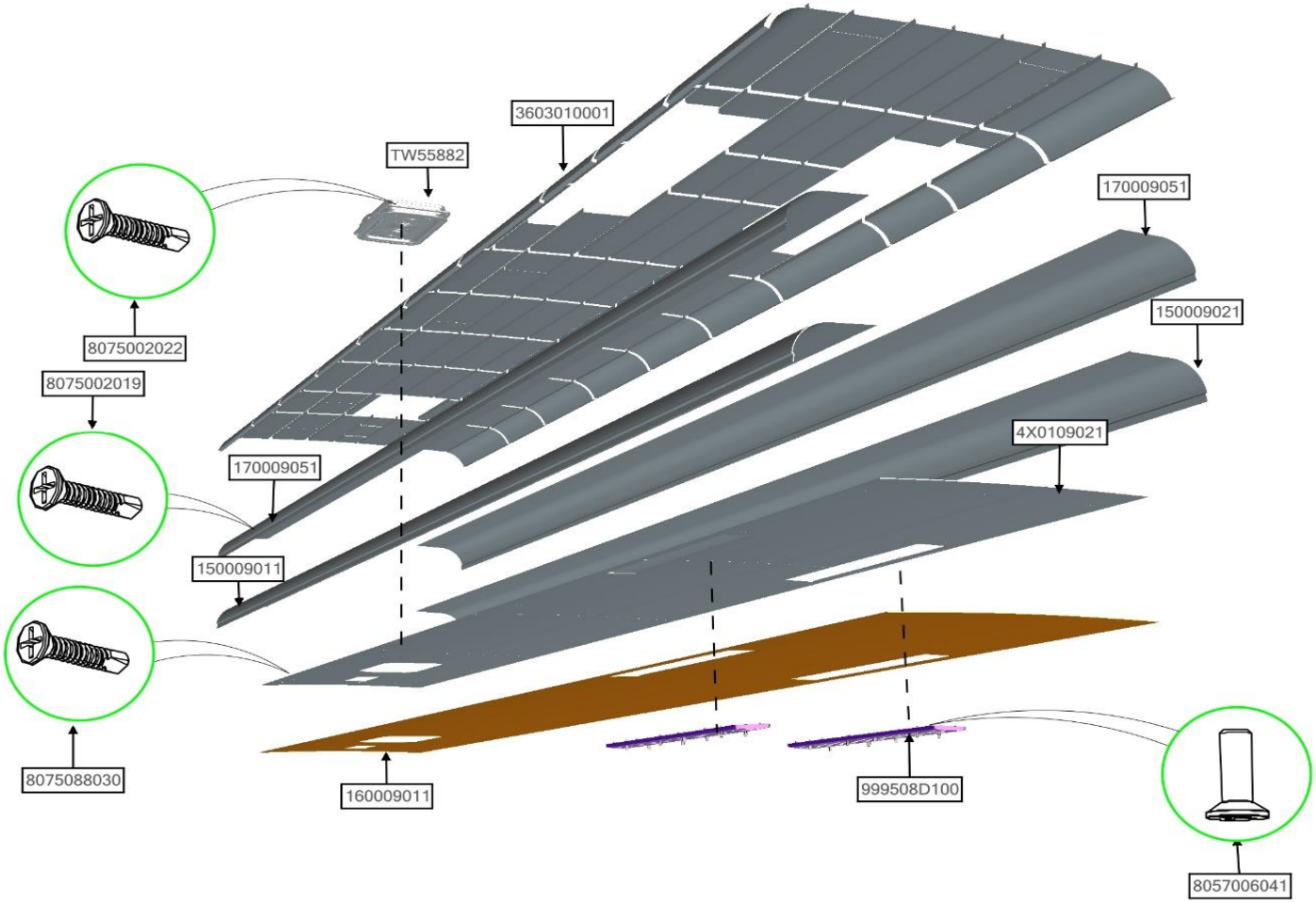


| ASSB_NAME | PART NO. | NAME | QTY |
|---|---|---|---|
| MIDDLE CEILING | 150009011 | INSULATION, LH | 1 |
| | 150009021 | INSULATION, RH | 1 |
| | 8075002019 | SCREW 0415 | 1 |
| | 3603010001 | CEILING INSULATION | 1 |
| | TW55882 | CEILING FAN | 1 |
| | 160009011 | SIMILI | 1 |
| | 4X0109021 | FLOORING CELING | 1 |

| ASSB_NAME | PART NO. | NAME | QTY |
|---|---|---|---|
| MIDDLE CEILING | 8075088030 | SCREW 0425 | 1 |
| | 170009051 | ALUMIUM INSULATION | 1 |
| | 170009051 | ALUMIUM INSULATION | 1 |
| | 999508D100 | AIR-CONDITIONIN GRID | 4 |
| | 8075002022 | SCREW 0425 | 14 |
| | 8057006041 | BOLT 06020100 | 24 |
| | | | |

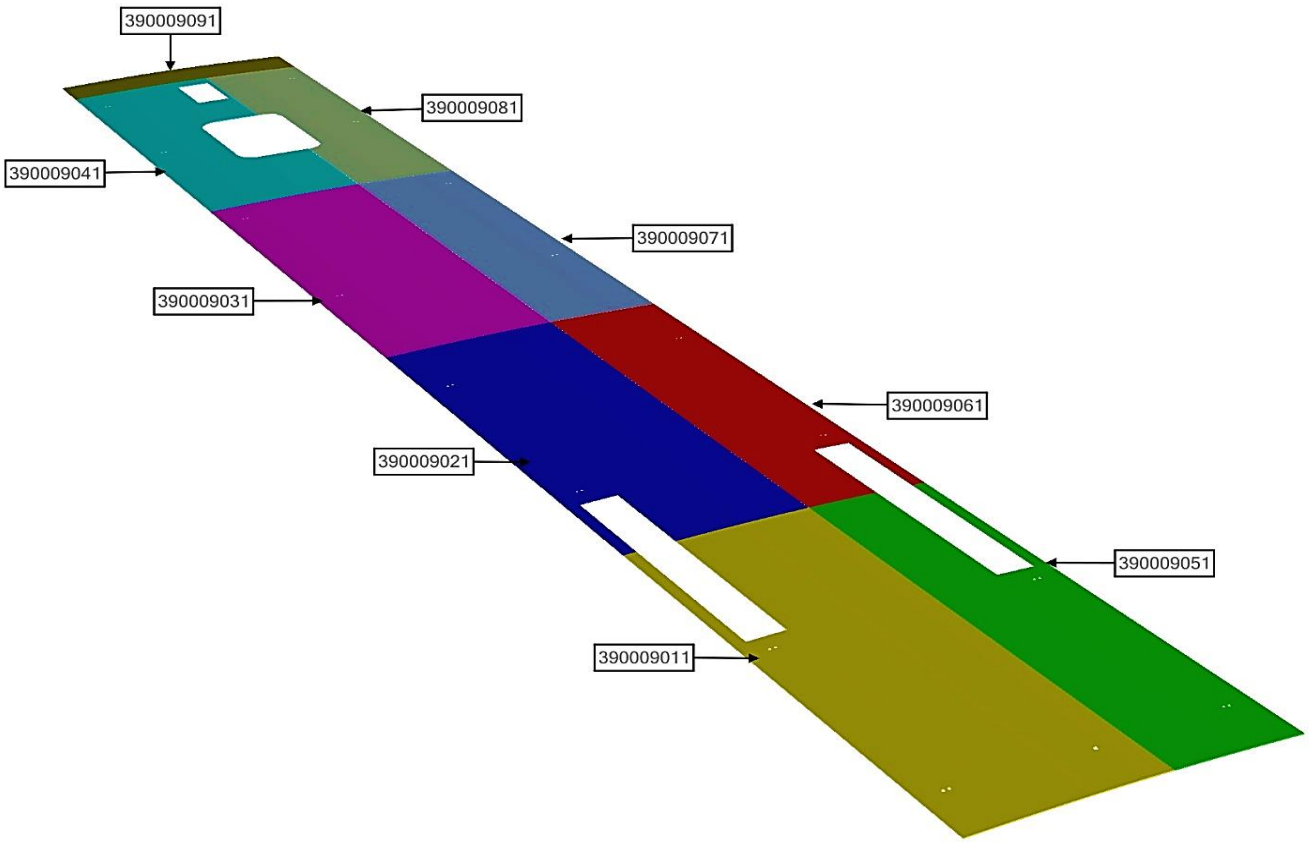


| ASSB_NAME | PART NO. | NAME | QTY |
|---|---|---|---|
| CEILING BOARD ASSY | 390009011 | CEILING BOARD 01 | 1 |
| | 390009021 | CEILING BOARD 02 | 1 |
| | 390009031 | CEILING BOARD 03 | 1 |
| | 390009041 | CEILING BOARD 04 | 1 |
| | 390009051 | CEILING BOARD 05 | 1 |
| | 390009061 | CEILING BOARD 06 | 1 |
| | 390009071 | CEILING BOARD 07 | 1 |

| ASSB_NAME | PART NO. | NAME | QTY |
|---|---|---|---|
| CEILING BOARD ASSY | 390009081 | CEILING BOARD 08 | 1 |
| | 390009091 | CEILING BOARD 09 | 1 |
| | | | |
| | | | |
| | | | |
| | | | |
| | | | |

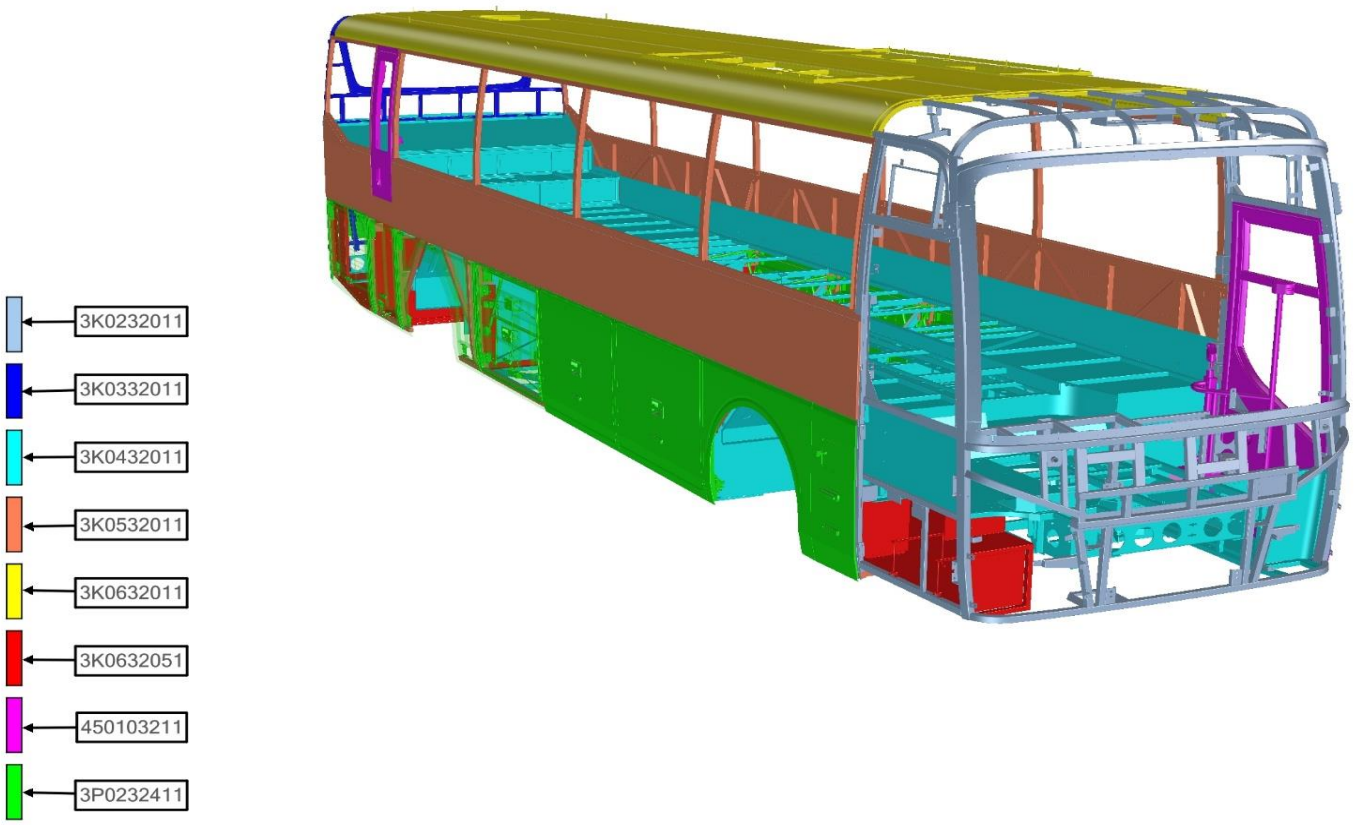


| ASSB_NAME | PART NO. | NAME | QTY |
|---|---|---|---|
| BODY | 3P0232411 | FLAP - ASSY | 1 |
| | 450103211 | DOOR - ASSY | 1 |
| | 3K0232011 | FRONT FRAME - ASSY | 1 |
| | 3K0332011 | REAR FRAME - ASSY | 1 |
| | 3K0532011 | SIDE FRAME - ASSY | 1 |
| | 3K0632011 | ROOF FRAME - ASSY | 1 |
| | 3K0432011 | FLOOR FRAME - ASSY | 1 |

| ASSB_NAME | PART NO. | NAME | QTY |
|---|---|---|---|
| BODY | 3K0632051 | STEEL SHEET - ASSY | 1 |
| | | | |
| | | | |
| | | | |
| | | | |
| | | | |
| | | | |

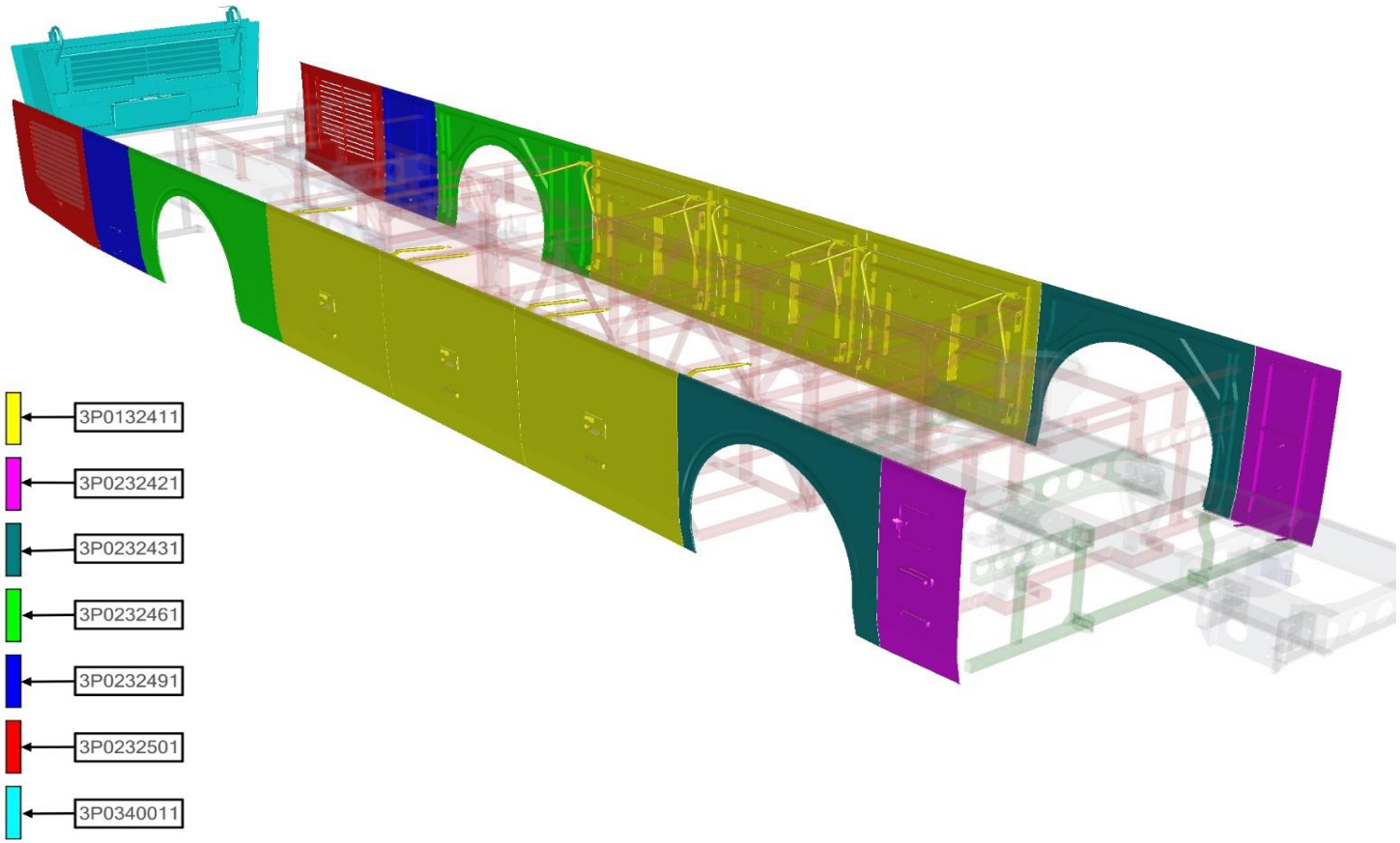


| ASSB_NAME | PART NO. | NAME | QTY | ASSB_NAME | PART NO. | NAME | QTY |
|---|---|---|---|---|---|---|---|
| FLAP - ASSY | 3P0340011 | REAR FLAP ASSY | 1 | FLAP - ASSY | | | |
| | 3P0132411 | LUGGAGE FLAP ASSY | 1 | | | | |
| | 3P0232501 | GRID FLAP ASSY | 1 | | | | |
| | 3P0232421 | TANK FUEL FLAP ASSY | 1 | | | | |
| | 3P0232491 | ELECTRICAL CABINET FLAP ASSY | 1 | | | | |
| | 3P0232461 | RH REAR FENDER FLAP | 1 | | | | |
| | 3P0232431 | FRONT FENDER FLAP ASSY | 1 | | | | |

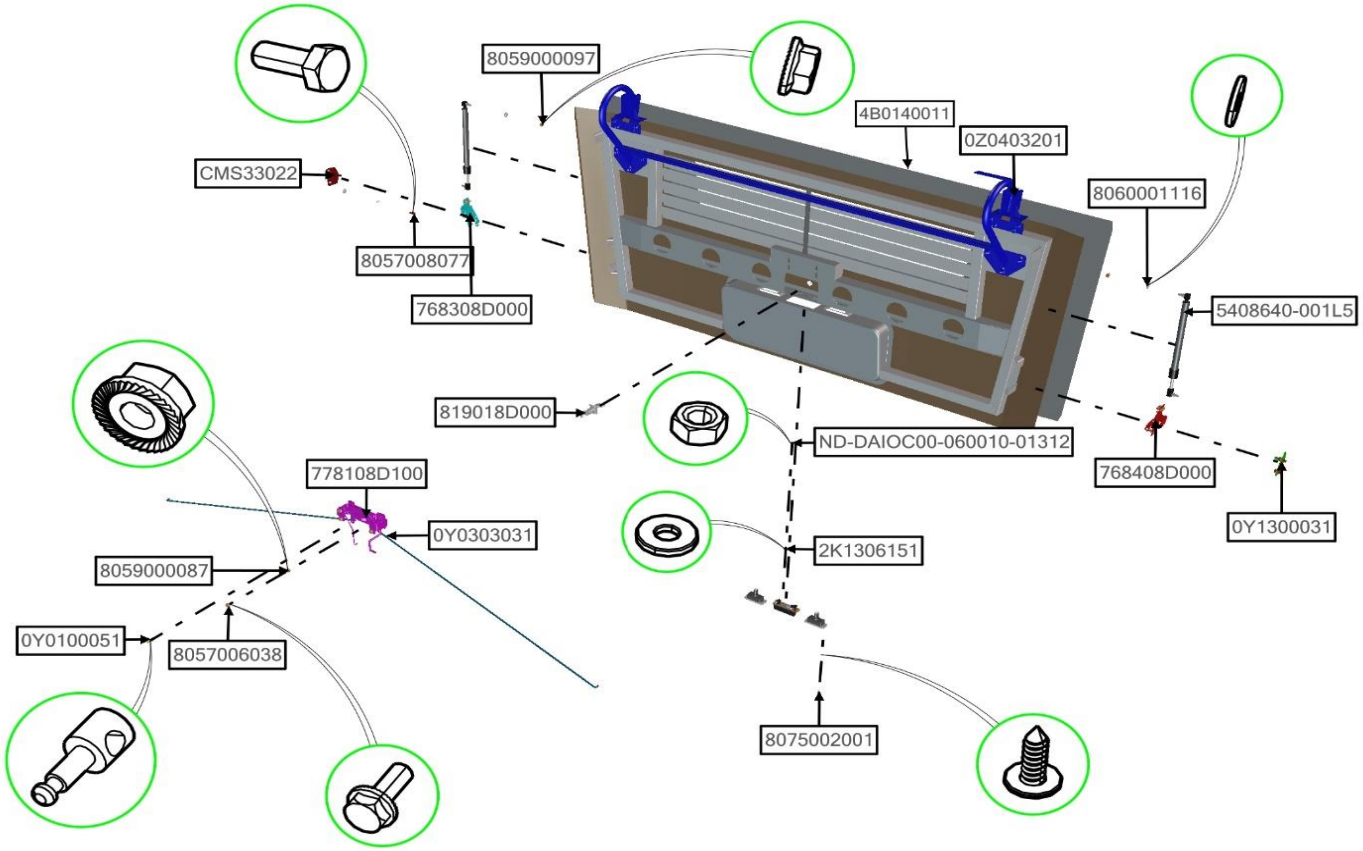


| ASSB_NAME | PART NO. | NAME | QTY |
|---|---|---|---|
| REAR FLAP ASSY | 8057006038 | BOLT 06015100 | 10 |
| | 8057008077 | BOLT 08020125 | 4 |
| | 778108D100 | REAR FLAP LINK - ASSY | 1 |
| | 4A0202011 | REAR FLAP LEVER ARM - ASSY | 1 |
| | 660200021 | LOCK - ASSY | 1 |
| | 0Y0100051 | LINK ROB 03 | 2 |
| | 768308D000 | RH REAR FLAP STOPPER | 1 |

| ASSB_NAME | PART NO. | NAME | QTY |
|---|---|---|---|
| REAR FLAP ASSY | 768408D000 | LH REAR FLAP STOPPER | 1 |
| | CMS33022 | RH STRIKER - ASSY | 1 |
| | 0Y1300031 | LH STRIKER - ASSY | 1 |
| | 4B0140011 | REAR FLAP COVER | 1 |
| | 778208DTHB | ENGINE FLAP HANDLE | 1 |
| | 5408640-001L5 | LIFTER - ASSY | 2 |
| | 0Y0303031 | ROD | 2 |

| ASSB_NAME | PART NO. | NAME | QTY |
|---|---|---|---|
| REAR FLAP ASSY | 8075002001 | SCREW 0515 | 4 |
| | 2K1306151 | WASHER Ø06 | 2 |
| | 8060001116 | WASHER Ø08 | 6 |
| | 8059000087 | NUT 06100 | 10 |
| | ND-DAIOC00-060010-01312 | NUT 06100 | 2 |
| | 8059000097 | NUT 08125 | 2 |
| | 926108A110 | NUMBER PLATE LAMP | 2 |
| | 8060004220 | SPLIT WASHER Ø08 | 4 |

| ASSB_NAME | PART NO. | NAME | QTY |
|---|---|---|---|
| REAR FLAP ASSY | | | |

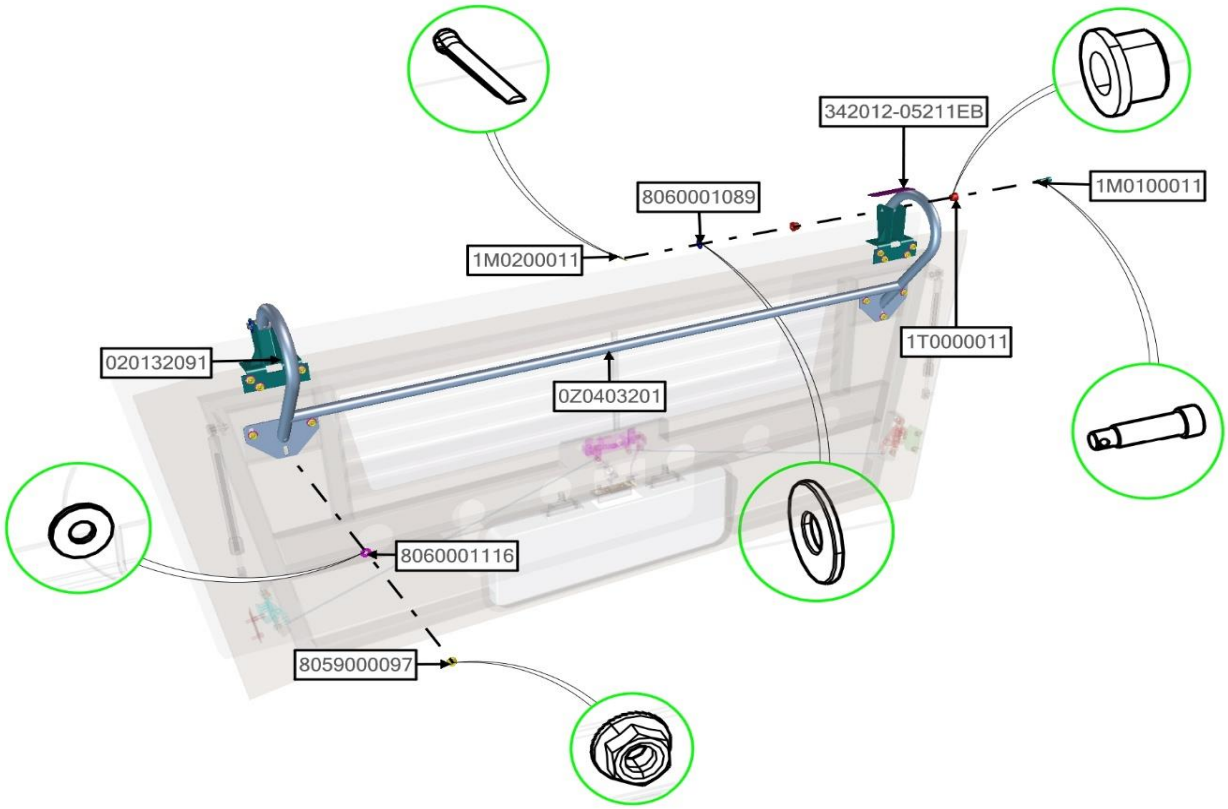


| ASSB_NAME | PART NO. | NAME | QTY |
|---|---|---|---|
| REAR FLAP LEVER ARM - ASSY | 1T0000011 | PLASTIC SPACER 01 | 4 |
| | 1M0200011 | SPLIT PIN | 2 |
| | 1M0100011 | PIN | 2 |
| | 0Z0403201 | #N/A | 1 |
| | 020132091 | BRACKET | 2 |
| | 342012-05211EB | BRACKET | 1 |
| | 8060001116 | WASHER Ø08 | 14 |

| ASSB_NAME | PART NO. | NAME | QTY |
|---|---|---|---|
| REAR FLAP LEVER ARM - ASSY | 8060001089 | WASHER Ø10 | 2 |
| | 8059000097 | NUT 08125 | 14 |
| | | | |
| | | | |
| | | | |
| | | | |
| | | | |

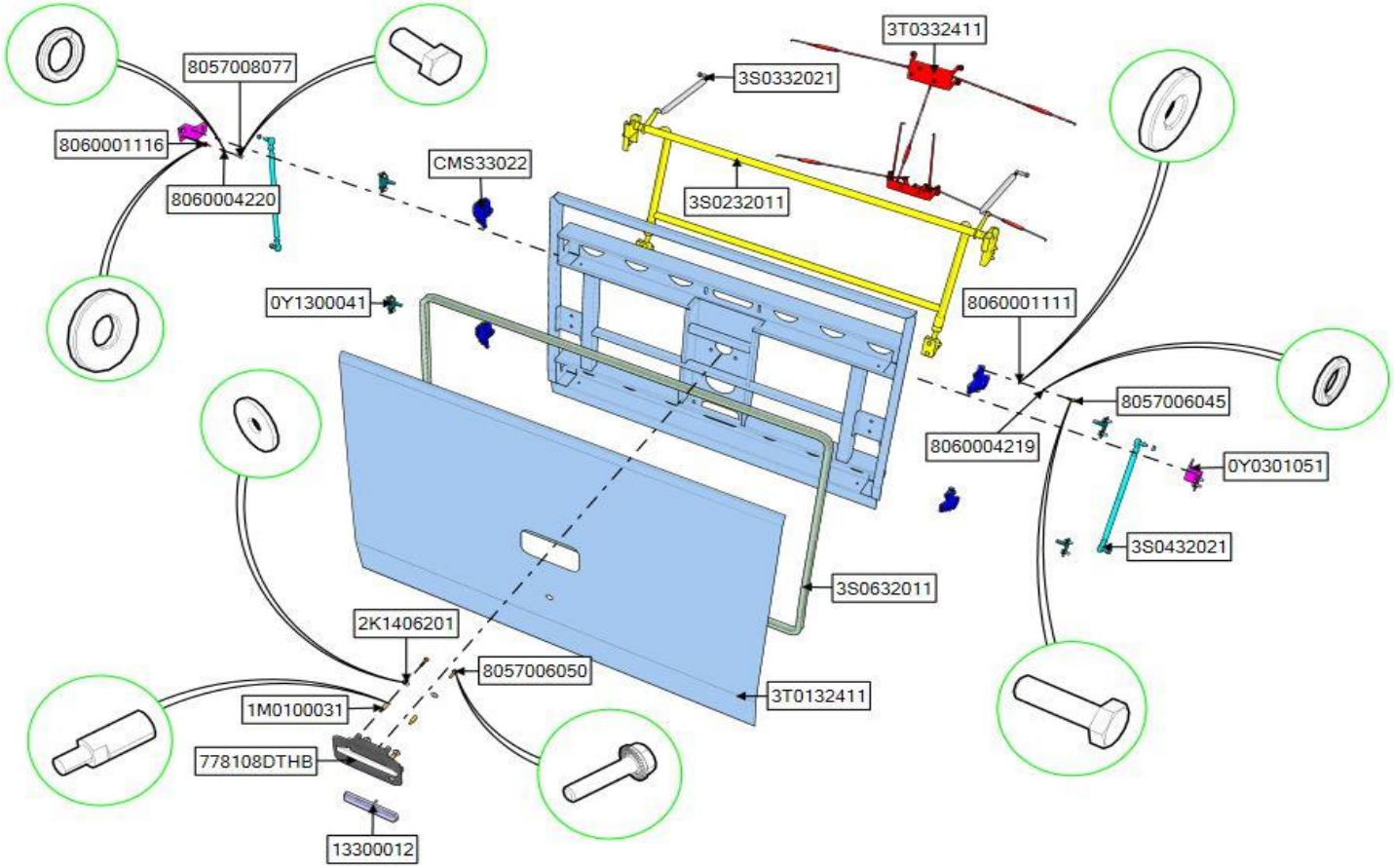


| ASSB_NAME | PART NO. | NAME | QTY |
|---|---|---|---|
| LUGGAGE FLAP ASSY | 0Y0301051 | BRACKET | 2 |
| | 0Y1300041 | LOCK - ASSY | 4 |
| | 1M0100031 | PIN | 4 |
| | 2K1406201 | WASHER Ø06 | 4 |
| | 3S0232011 | LUGGAGE FLAP LEVER ARM - ASSY | 1 |
| | 3S0332021 | LIFTER - ASSY | 2 |
| | 3S0432021 | LUGGAGE FLAP TURNBUCKLE | 2 |

| ASSB_NAME | PART NO. | NAME | QTY |
|---|---|---|---|
| LUGGAGE FLAP ASSY | 3T0332411 | LINK - ASSY | 1 |
| | 778108DTHB | LINK - ASSY | 1 |
| | 8057006045 | BOLT 06020100 | 12 |
| | 8057006050 | BOLT 06025100 | 4 |
| | 8057008077 | BOLT 08020125 | 12 |
| | 8060001111 | WASHER Ø06 | 12 |
| | 8060001116 | WASHER Ø08 | 12 |

| ASSB_NAME | PART NO. | NAME | QTY |
|---|---|---|---|
| LUGGAGE FLAP ASSY | 8060004219 | SPLIT WASHER Ø06 | 12 |
| | 8060004220 | SPLIT WASHER Ø08 | 12 |
| | CMS33022 | LH,RH STRIKER ASSY | 4 |
| | 3T0132411 | LUGGAGE FLAP | 1 |

| ASSB_NAME | PART NO. | NAME | QTY |
|---|---|---|---|
| LUGGAGE FLAP ASSY | | | |

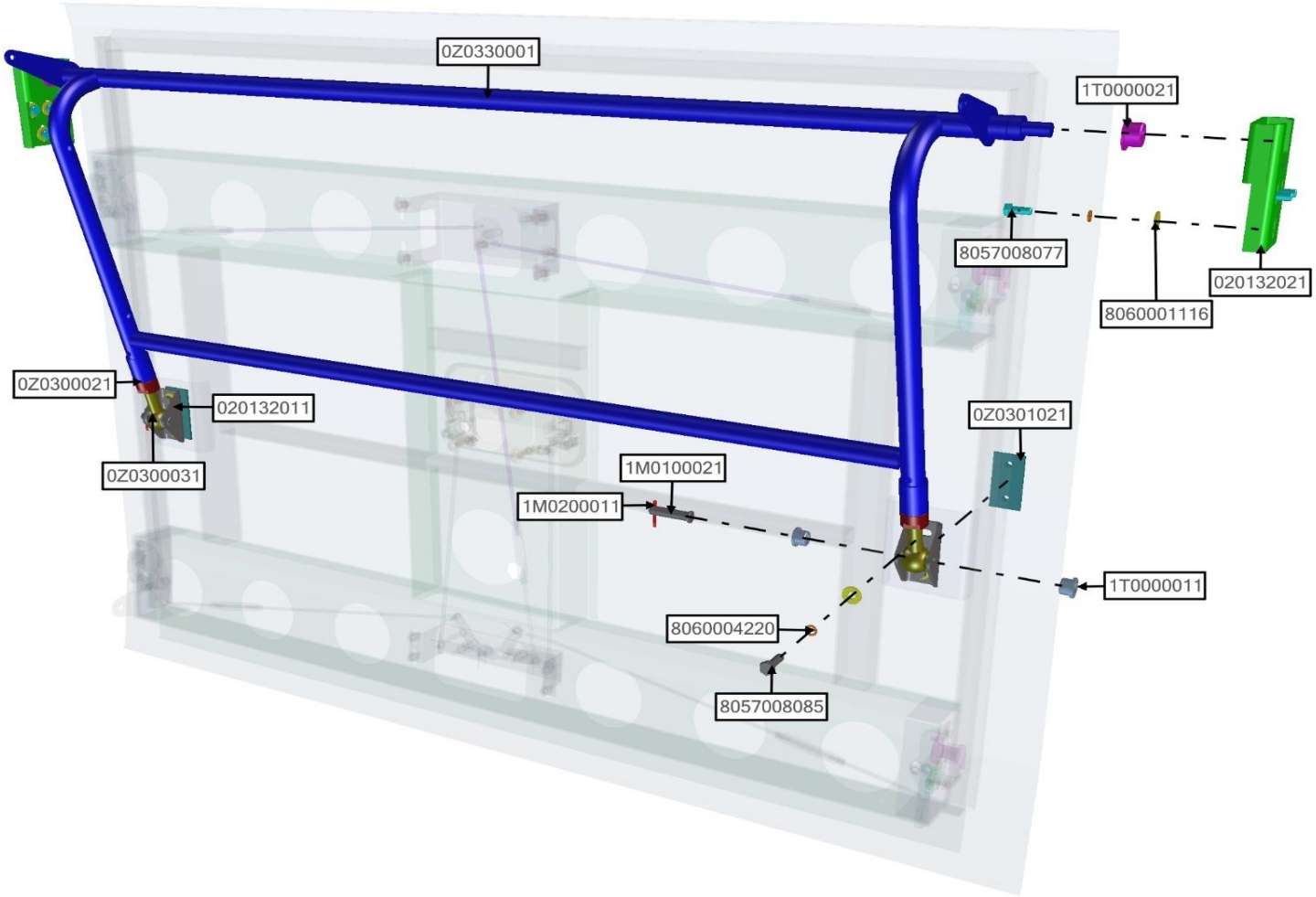


| ASSB_NAME | PART NO. | NAME | QTY |
|---|---|---|---|
| LUGGAGE FLAP LEVER ARM - ASSY | 0Z0300021 | LOCK NUT | 2 |
| | 0Z0300031 | TURNBUCKLE PIN | 2 |
| | 0Z0301021 | BRACKET | 2 |
| | 0Z0330001 | LUGGAGE FLAP LEVER ARM | 1 |
| | 1M0100021 | PIN | 2 |
| | 1M0200011 | SPLIT PIN | 2 |
| | 1T0000011 | PLASTIC SPACER 01 | 4 |

| ASSB_NAME | PART NO. | NAME | QTY |
|---|---|---|---|
| LUGGAGE FLAP LEVER ARM - ASSY | 1T0000021 | PLASTIC SPACER 02 | 2 |
| | 020132011 | BRACKET | 2 |
| | 020132021 | LUGGAGE FLAP HINGE | 2 |
| | 8057008077 | BOLT 08020125 | 6 |
| | 8057008085 | BOLT 08025125 | 4 |
| | 8060001116 | WASHER Ø08 | 10 |
| | 8060004220 | SPLIT WASHER Ø08 | 10 |

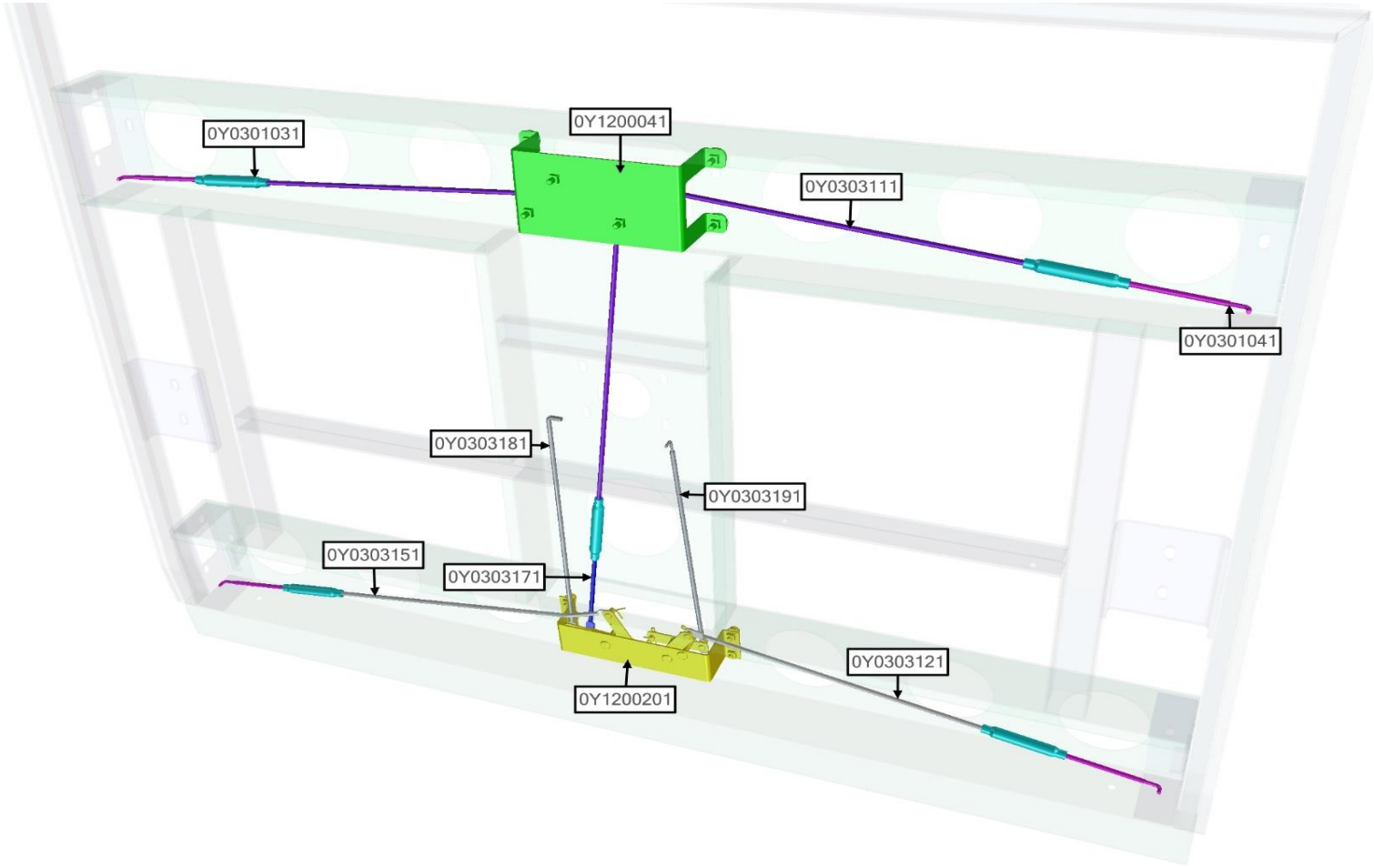


| ASSB_NAME | PART NO. | NAME | QTY |
|---|---|---|---|
| LINK - ASSY | 0Y0301031 | LINK ROB 03 | 5 |
| | 0Y0301041 | LINK ROB 04 | 4 |
| | 0Y0303111 | LINK ROB 02 | 2 |
| | 0Y0303121 | LINK ROB 05 | 1 |
| | 0Y0303151 | LINK ROB 06 | 1 |
| | 0Y0303171 | LINK ROB 09 | 1 |
| | 0Y0303181 | LINK ROB 07 | 1 |

| ASSB_NAME | PART NO. | NAME | QTY |
|---|---|---|---|
| LINK - ASSY | 0Y0303191 | LINK ROB 08 | 1 |
| | 0Y1200041 | HANDLE - ASSY | 1 |
| | 0Y1200201 | BELOW HANDLE - ASSY | 1 |
| | | | |
| | | | |
| | | | |
| | | | |

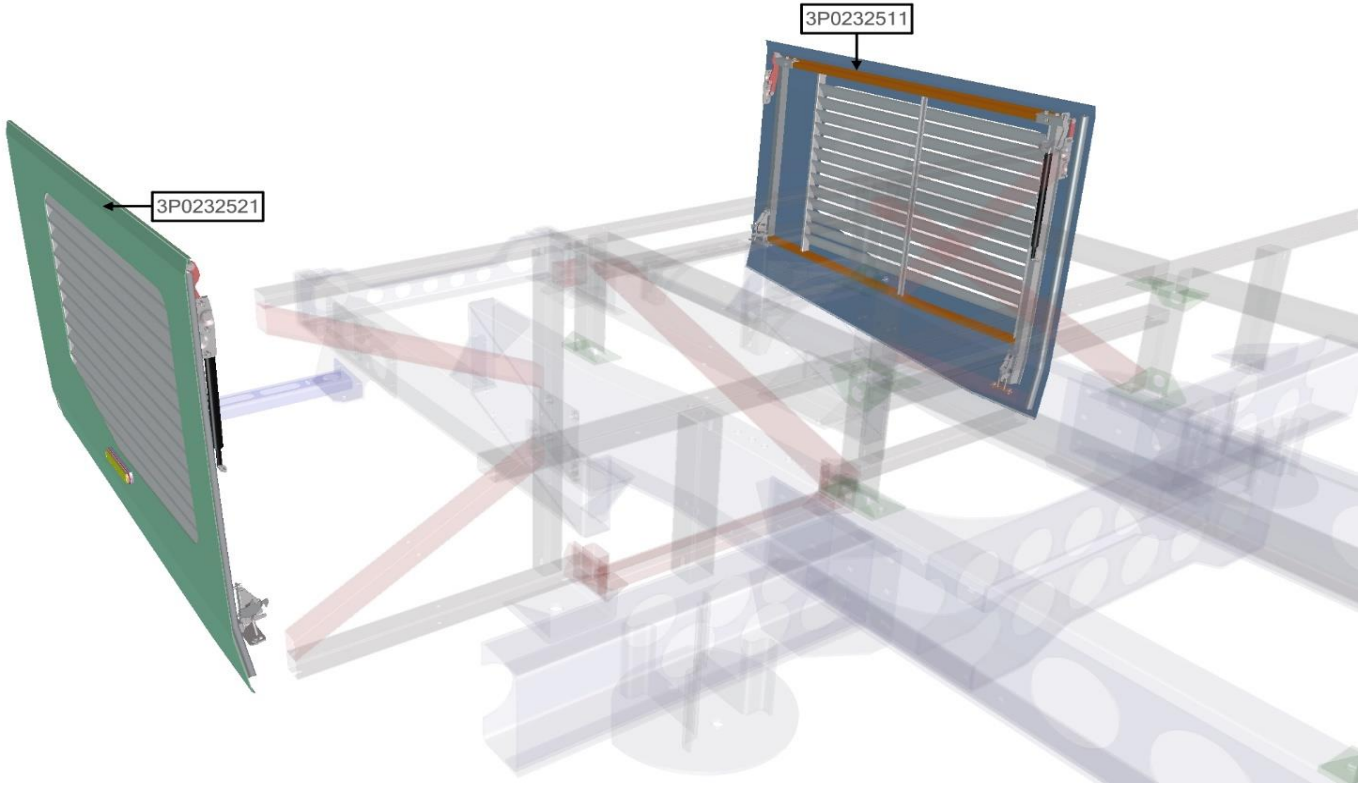


| ASSB_NAME | PART NO. | NAME | QTY |
|---|---|---|---|
| GRID FLAP ASSY | 3P0232521 | GRID FLAP RH | 1 |
| | 3P0232511 | GRID FLAP LH | 1 |
| | | | |
| | | | |
| | | | |
| | | | |
| | | | |

| ASSB_NAME | PART NO. | NAME | QTY |
|---|---|---|---|
| GRID FLAP ASSY | | | |
| | | | |
| | | | |
| | | | |
| | | | |
| | | | |
| | | | |

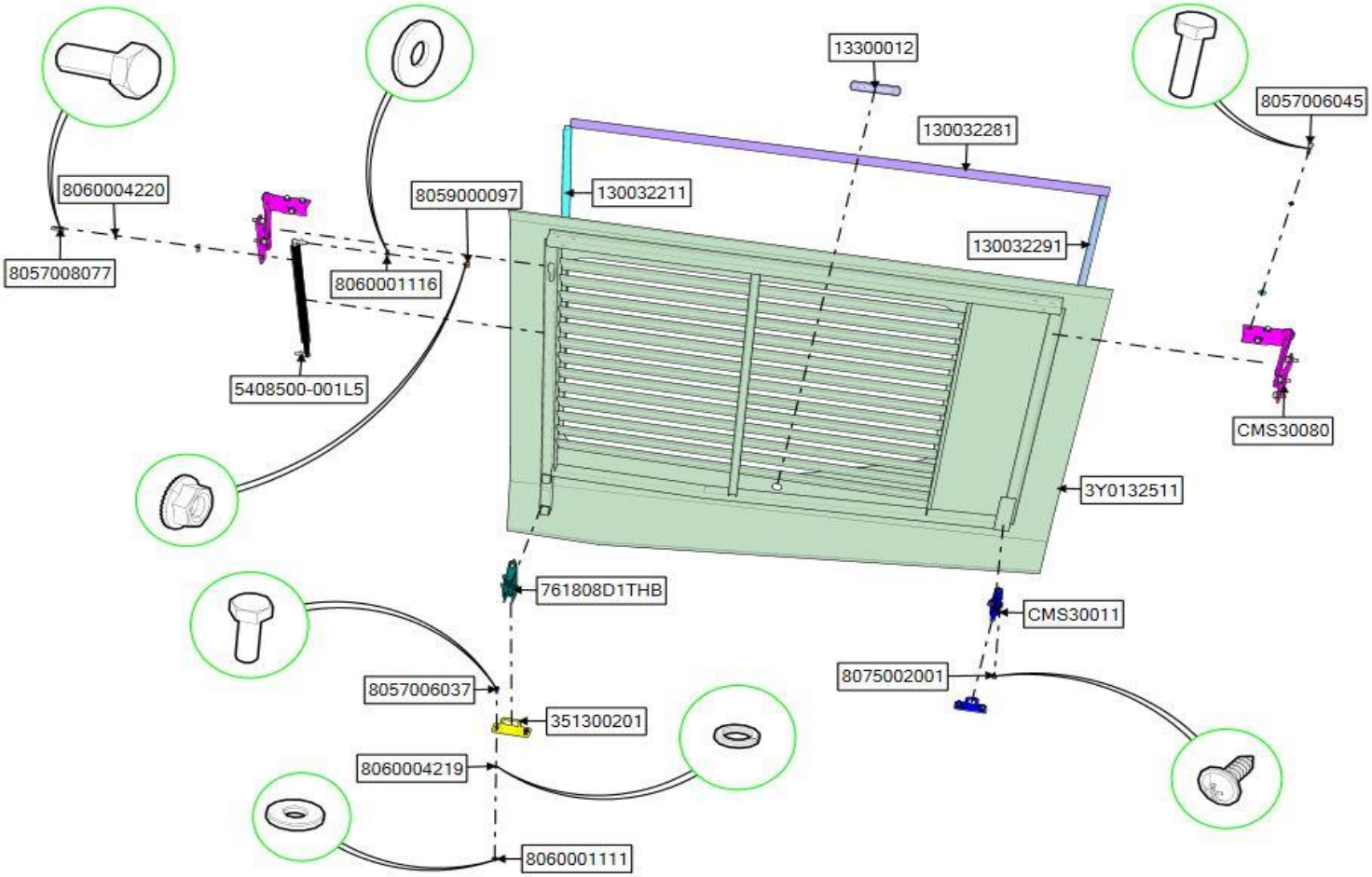


| ASSB_NAME | PART NO. | NAME | QTY |
|---|---|---|---|
| GRID FLAP RH | 761808D1THB | LOCK | 1 |
| | 5408500-001L5 | LIFTER - ASSY | 1 |
| | 13300012 | SIDE MARKER LAMP | 1 |
| | 130032211 | RUBBER-SEALING 01 | 1 |
| | 130032281 | RUBBER-SEALING 08 | 1 |
| | 130032291 | RUBBER-SEALING 09 | 1 |
| | 351300201 | STRIKER 02 | 1 |

| ASSB_NAME | PART NO. | NAME | QTY |
|---|---|---|---|
| GRID FLAP RH | 3Y0132511 | RH GRID FLAP COVER | 1 |
| | 8057006037 | BOLT 06015100 | 4 |
| | 8057006045 | BOLT 06020100 | 8 |
| | 8057008077 | BOLT 08020125 | 6 |
| | 8059000097 | NUT 08125 | 1 |
| | 8060001111 | WASHER Ø06 | 12 |
| | 8060001116 | WASHER Ø08 | 7 |

| ASSB_NAME | PART NO. | NAME | QTY |
|---|---|---|---|
| | 8060004219 | SPLIT WASHER Ø06 | 12 |
| | 8060004220 | SPLIT WASHER Ø08 | 6 |
| | 8075002001 | SCREW 0515 | 3 |
| | CMS30011 | LOCK - ASSY | 1 |
| | CMS30011 | LOCK | 1 |
| | CMS30080 | LH HINGE | 1 |
| | CMS30080 | RH HINGE | 1 |
| | | | |
| | | | |
| | | | |
| | | | |
| | | | |
| | | | |
| | | | |
| | | | |
| | | | |
| GRID FLAP RH | | | |
| | | | |
| | | | |
| | | | |
| | | | |
| | | | |
| | | | |
| | | | |
| | | | |
| | | | |
| | | | |
| | | | |
| | | | |
| | | | |
| | | | |
| | | | |
| | | | |

| ASSB_NAME | PART NO. | NAME | QTY |
|---|---|---|---|
| | | | |
| | | | |
| | | | |
| | | | |
| | | | |
| | | | |
| | | | |
| | | | |
| | | | |
| | | | |
| | | | |
| | | | |
| | | | |
| | | | |
| | | | |
| | | | |

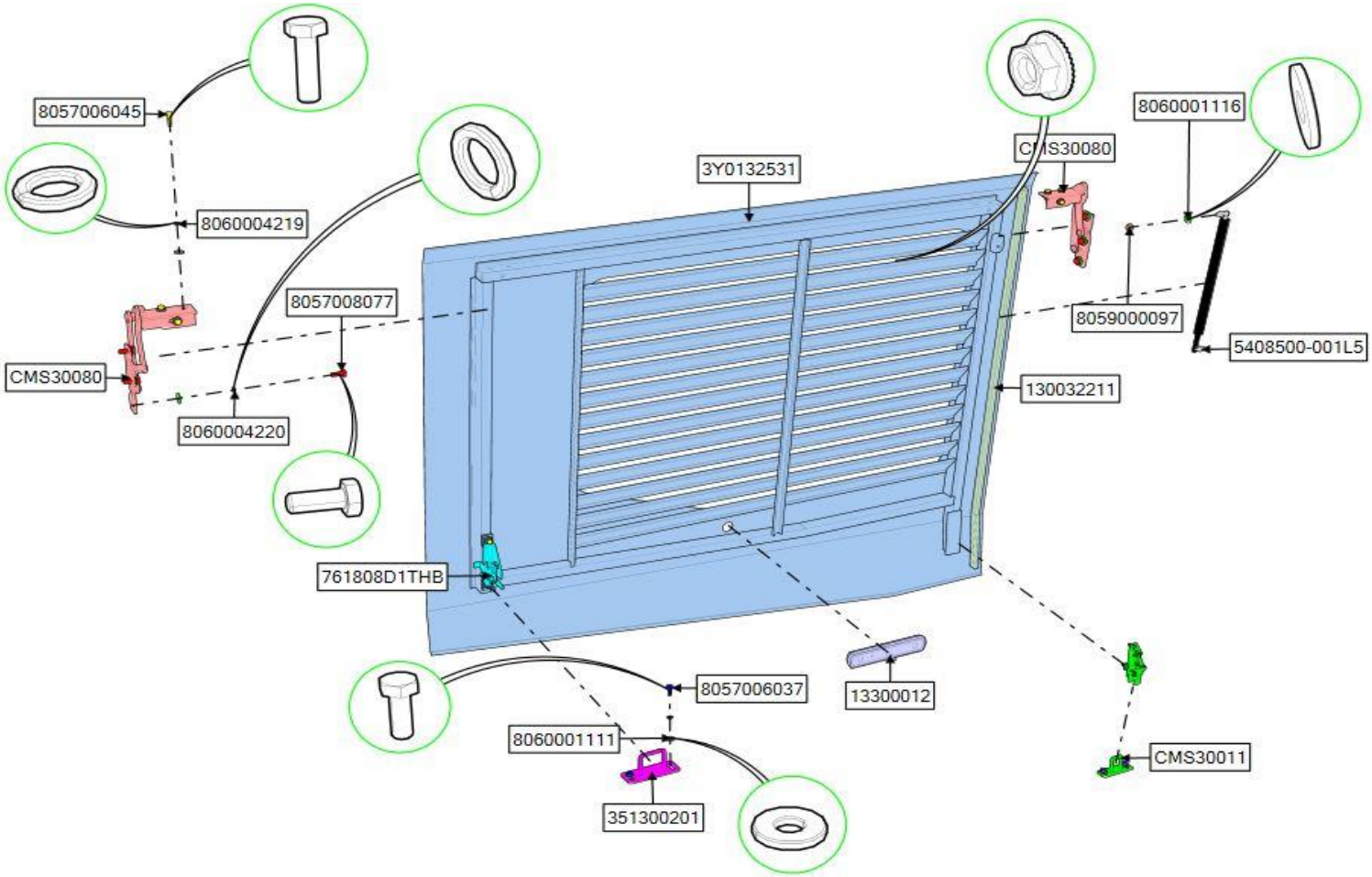


| ASSB_NAME | PART NO. | NAME | QTY |
|---|---|---|---|
| GRID FLAP LH | 761808D1THB | LOCK | 1 |
| | 5408500-001L5 | LIFTER - ASSY | 1 |
| | 13300012 | SIDE MARKER LAMP | 1 |
| | 130032211 | RUBBER-SEALING 01 | 1 |
| | 351300201 | STRIKER 02 | 1 |
| | 3Y0132531 | LH GRID FLAP COVER | 1 |
| | 8057006037 | BOLT 06015100 | 4 |

| ASSB_NAME | PART NO. | NAME | QTY |
|---|---|---|---|
| GRID FLAP LH | 8057006045 | BOLT 06020100 | 8 |
| | 8057008077 | BOLT 08020125 | 6 |
| | 8059000097 | NUT 08125 | 1 |
| | 8060001111 | WASHER Ø06 | 12 |
| | 8060001116 | WASHER Ø08 | 7 |
| | 8060004219 | SPLIT WASHER Ø06 | 12 |
| | 8060004220 | SPLIT WASHER Ø08 | 6 |

| ASSB_NAME | PART NO. | NAME | QTY |
|---|---|---|---|
| GRID FLAP LH | 8075002001 | SCREW 0515 | 3 |
| | CMS30011 | LOCK - ASSY | 1 |
| | CMS30080 | LH,RH HINGE | 1 |

| ASSB_NAME | PART NO. | NAME | QTY |
|---|---|---|---|
| GRID FLAP LH | | | |

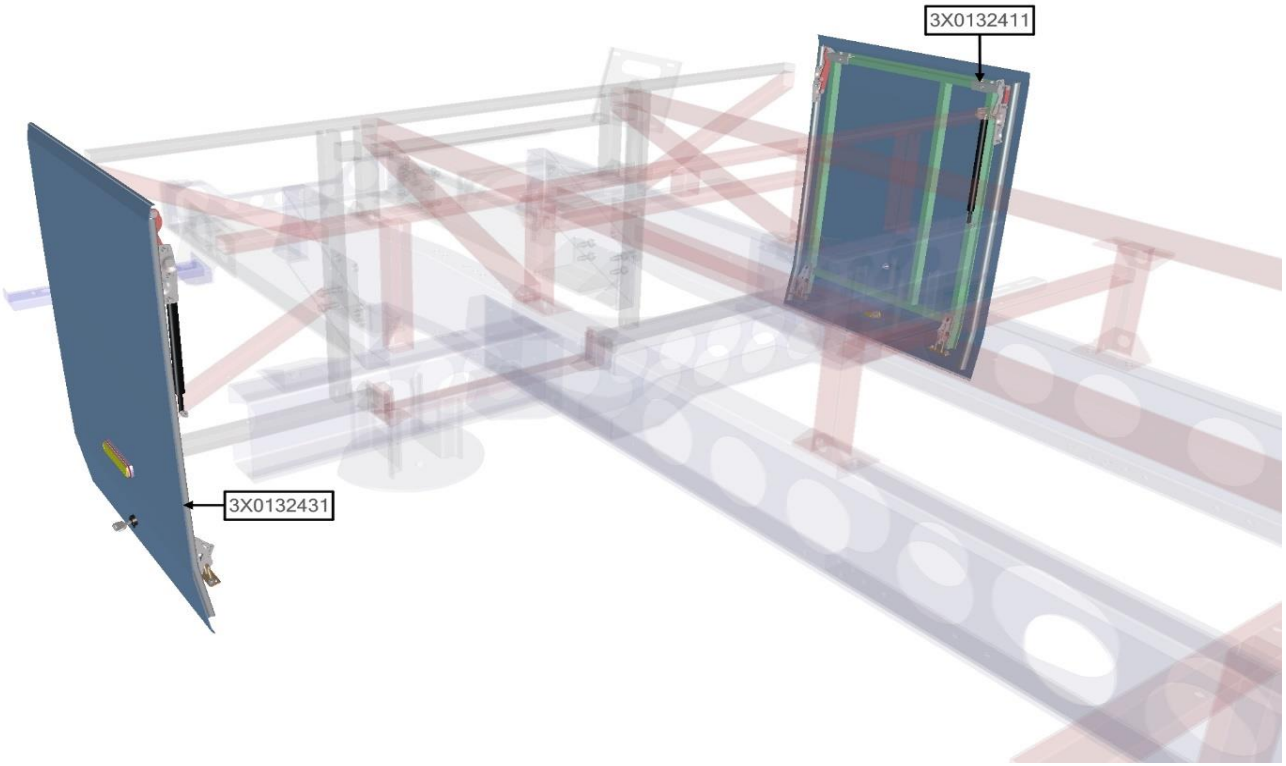


| ASSB_NAME | PART NO. | NAME | QTY |
|---|---|---|---|
| ELECTRICAL CABINET FLAP ASSY | 3X0132431 | RH ELECTRICAL CABINET FLAP ASSY | 1 |
| | 3X0132411 | LH ELECTRICAL CABINET FLAP ASSY | 1 |
| | | | |
| | | | |
| | | | |
| | | | |
| | | | |

| ASSB_NAME | PART NO. | NAME | QTY |
|---|---|---|---|
| ELECTRICAL CABINET FLAP ASSY | | | |
| | | | |
| | | | |
| | | | |
| | | | |
| | | | |
| | | | |

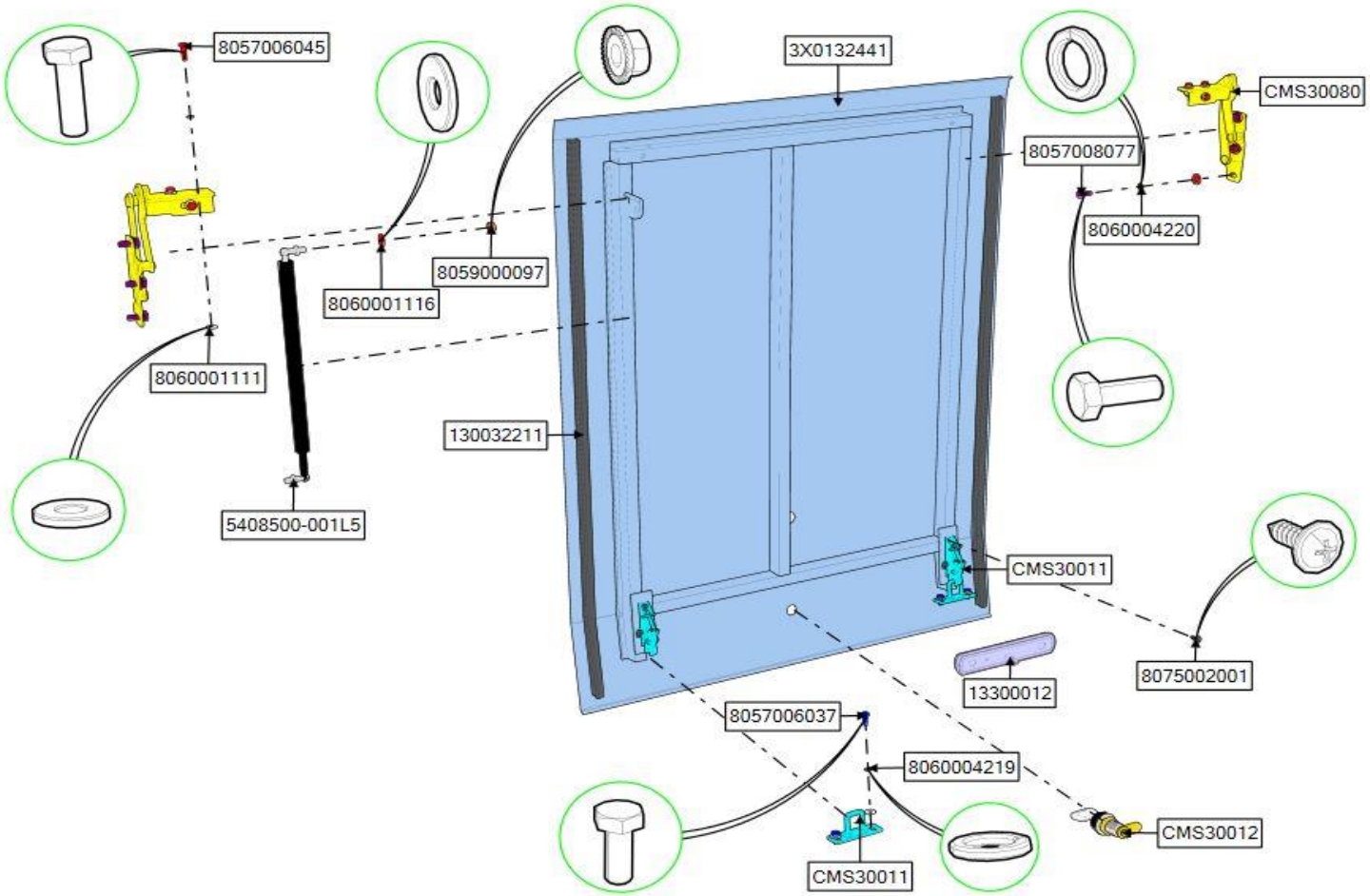


| ASSB_NAME | PART NO. | NAME | QTY |
|---|---|---|---|
| LH ELECTRICAL CABINET FLAP ASSY | 5408500-001L5 | LIFTER - ASSY | 1 |
| | 13300012 | SIDE MARKER LAMP | 1 |
| | 130032211 | RUBBER-SEALING 01 | 2 |
| | 3X0132441 | ELECTRICAL CABINET FLAP COVER | 1 |
| | 8057006037 | BOLT 06015100 | 4 |
| | 8057006045 | BOLT 06020100 | 6 |
| | 8057008077 | BOLT 08020125 | 6 |

| ASSB_NAME | PART NO. | NAME | QTY |
|---|---|---|---|
| LH ELECTRICAL CABINET FLAP ASSY | 8059000097 | NUT 08125 | 1 |
| | 8060001111 | WASHER Ø06 | 10 |
| | 8060001116 | WASHER Ø08 | 7 |
| | 8060004219 | SPLIT WASHER Ø06 | 10 |
| | 8060004220 | SPLIT WASHER Ø08 | 6 |
| | 8075002001 | SCREW 0515 | 6 |
| | CMS30011 | LOCK - ASSY | 2 |

| ASSB_NAME | PART NO. | NAME | QTY |
|---|---|---|---|
| LH ELECTRICAL CABINET FLAP ASSY | CMS30011 | LOCK - ASSY | 1 |
| | CMS30080 | LH,RH HINGE | 1 |

| ASSB_NAME | PART NO. | NAME | QTY |
|---|---|---|---|
| LH ELECTRICAL CABINET FLAP ASSY | | | |

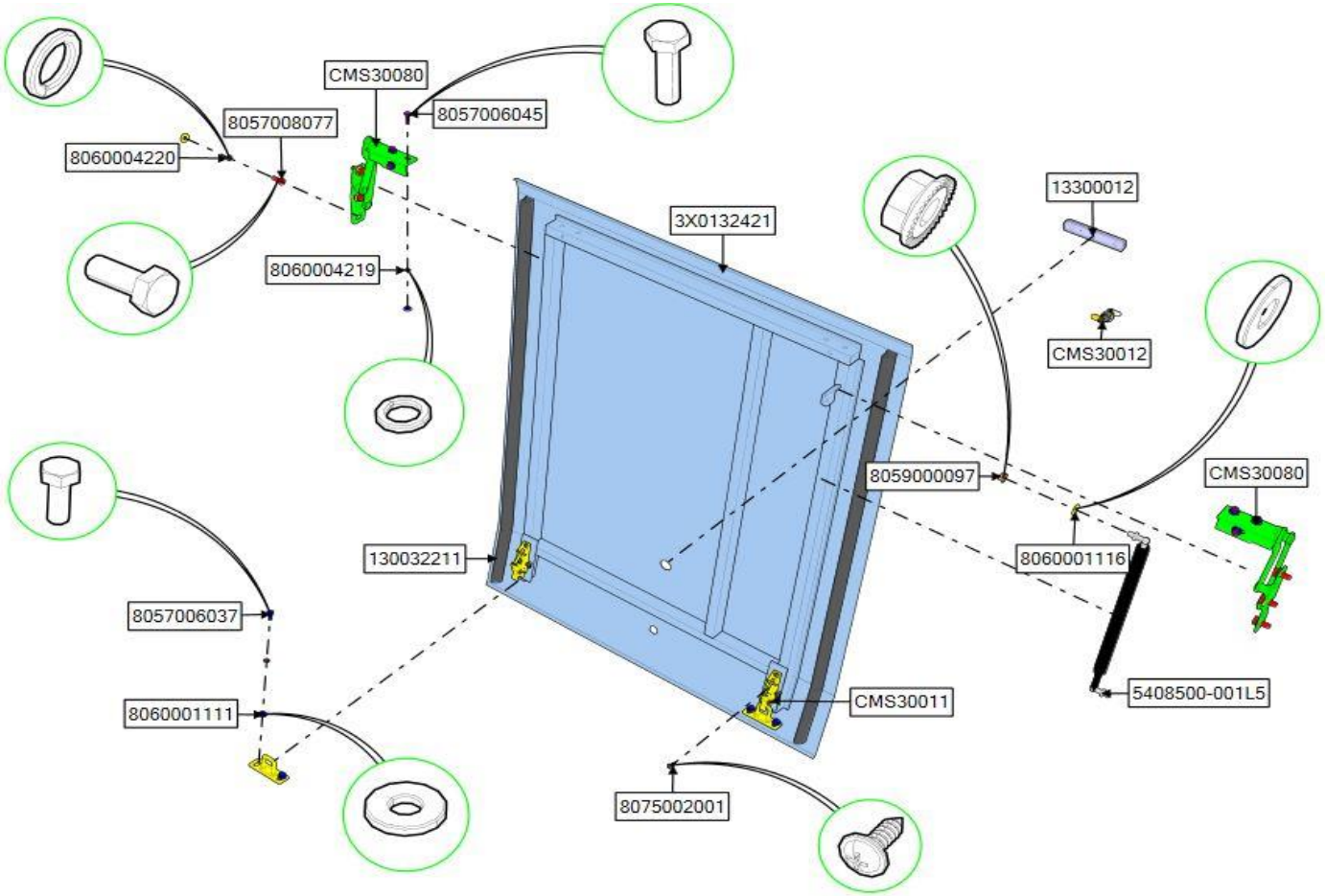


| ASSB_NAME | PART NO. | NAME | QTY |
|---|---|---|---|
| RH ELECTRICAL CABINET FLAP ASSY | 5408500-001L5 | LIFTER - ASSY | 1 |
| | 13300012 | SIDE MARKER LAMP | 1 |
| | 130032211 | RUBBER-SEALING 01 | 2 |
| | 3X0132421 | UREA TANK FLAP COVER | 1 |
| | 8057006037 | BOLT 06015100 | 4 |
| | 8057006045 | BOLT 06020100 | 6 |
| | 8057008077 | BOLT 08020125 | 6 |

| ASSB_NAME | PART NO. | NAME | QTY |
|---|---|---|---|
| RH ELECTRICAL CABINET FLAP ASSY | 8059000097 | NUT 08125 | 1 |
| | 8060001111 | WASHER Ø06 | 10 |
| | 8060001116 | WASHER Ø08 | 7 |
| | 8060004219 | SPLIT WASHER Ø06 | 10 |
| | 8060004220 | SPLIT WASHER Ø08 | 6 |
| | 8075002001 | SCREW 0515 | 6 |
| | CMS30011 | LOCK - ASSY | 2 |

| ASSB_NAME | PART NO. | NAME | QTY |
|---|---|---|---|
| RH ELECTRICAL CABINET FLAP ASSY | CMS30012 | LOCK - ASSY | 1 |
| | CMS30080 | LH,RH HINGE | 1 |

| ASSB_NAME | PART NO. | NAME | QTY |
|---|---|---|---|
| RH ELECTRICAL CABINET FLAP ASSY | | | |

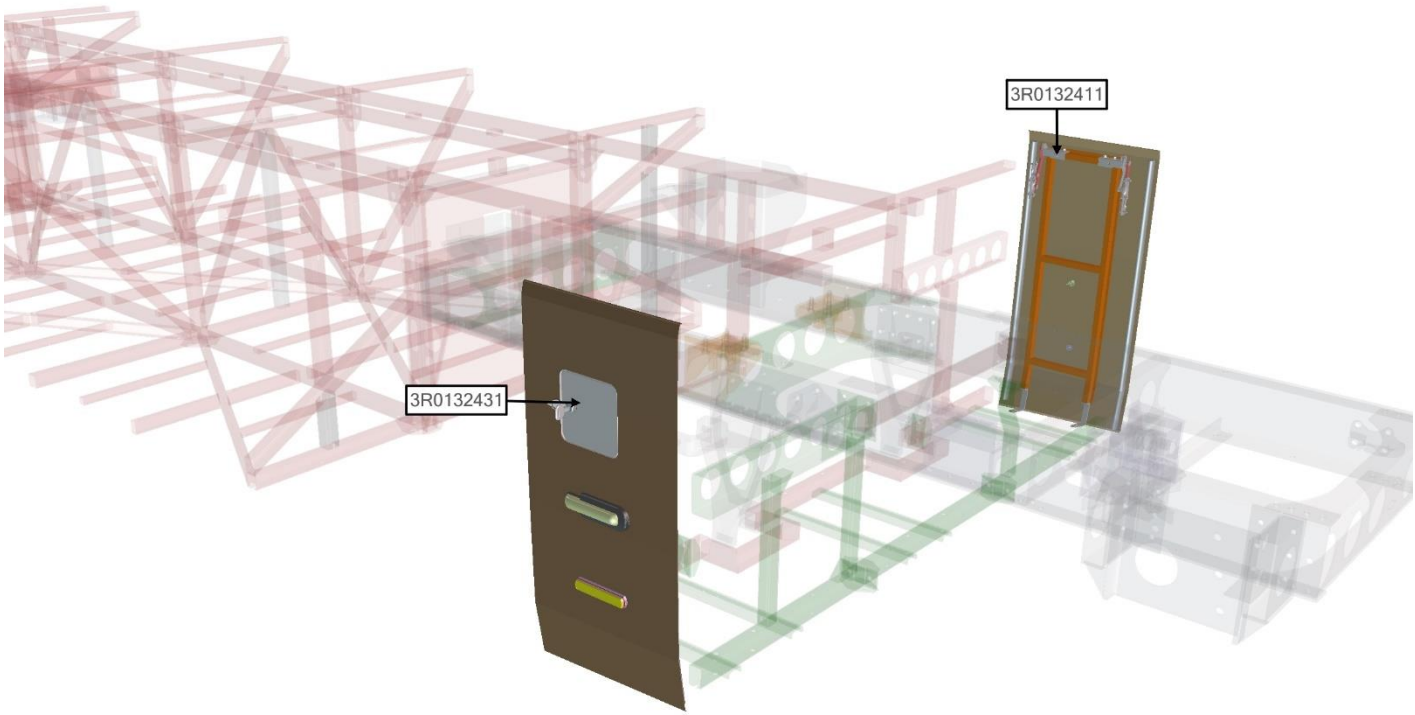


| ASSB_NAME | PART NO. | NAME | QTY |
|---|---|---|---|
| TANK FUEL FLAP ASSY | 3R0132431 | TANK FUEL FLAP RH ASSY | 1 |
| | 3R0132411 | TANK FUEL FLAP LH ASSY | 1 |
| | | | |
| | | | |
| | | | |
| | | | |
| | | | |

| ASSB_NAME | PART NO. | NAME | QTY |
|---|---|---|---|
| TANK FUEL FLAP ASSY | | | |
| | | | |
| | | | |
| | | | |
| | | | |
| | | | |
| | | | |

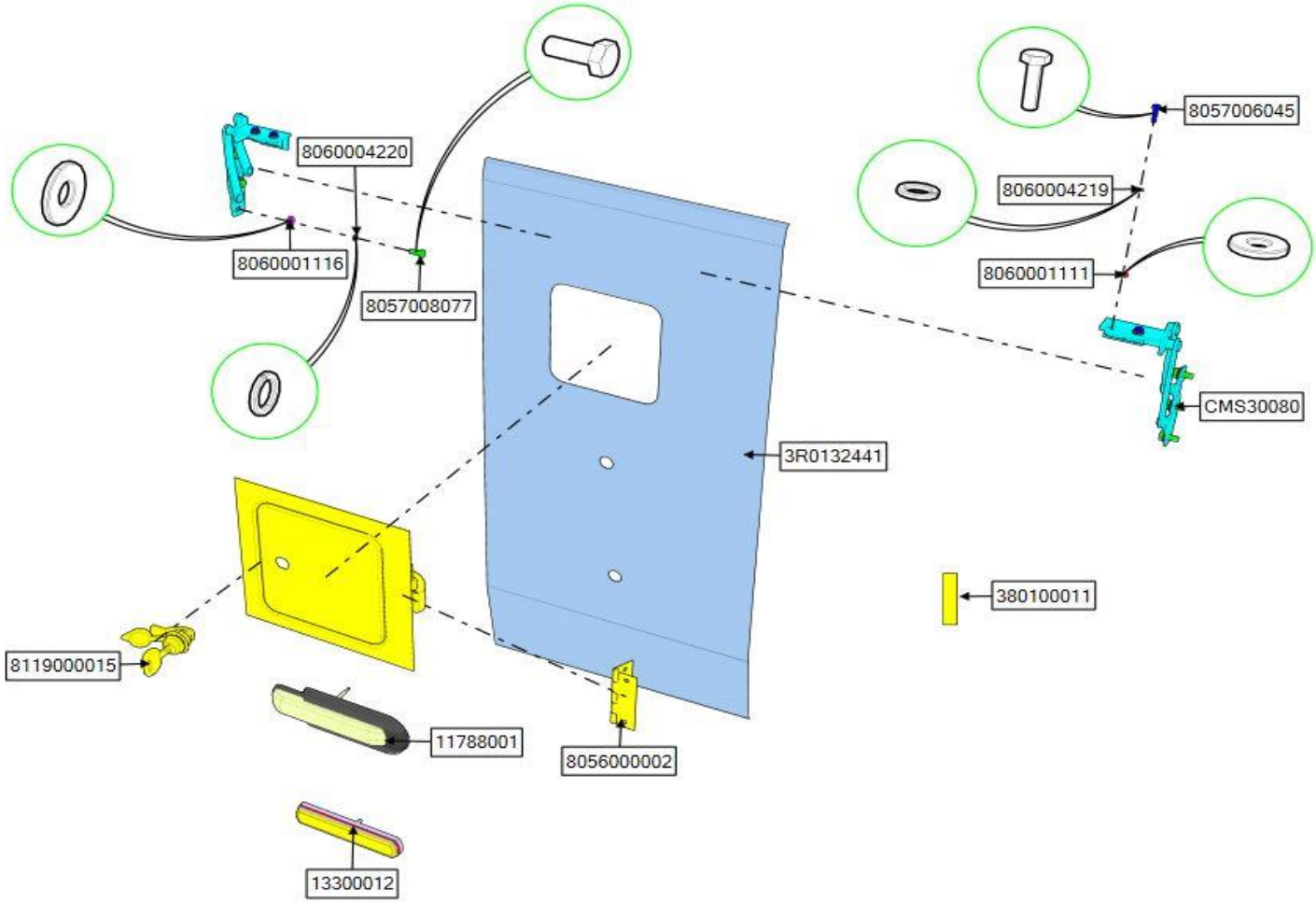


| ASSB_NAME | PART NO. | NAME | QTY |
|---|---|---|---|
| TANK FUEL FLAP RH ASSY | 11788001 | SIDELAMP | 1 |
| | 13300012 | SIDE MARKER LAMP | 1 |
| | 130032211 | RUBBER-SEALING 01 | 2 |
| | 3R0132441 | FUEL TANK CAP ASSY | 1 |
| | 520234191 | FLAP COVER | 1 |
| | 8056000002 | HINGE | 1 |
| | 8057006045 | BOLT 06020100 | 6 |

| ASSB_NAME | PART NO. | NAME | QTY |
|---|---|---|---|
| TANK FUEL FLAP RH ASSY | 8057008077 | BOLT 08020125 | 6 |
| | 8060001111 | WASHER Ø06 | 6 |
| | 8060001116 | WASHER Ø08 | 6 |
| | 8060004219 | SPLIT WASHER Ø06 | 6 |
| | 8060004220 | SPLIT WASHER Ø08 | 6 |
| | 8119000015 | LOCK - ASSY | 1 |
| | CMS30080 | LH,RH HINGE | 1 |

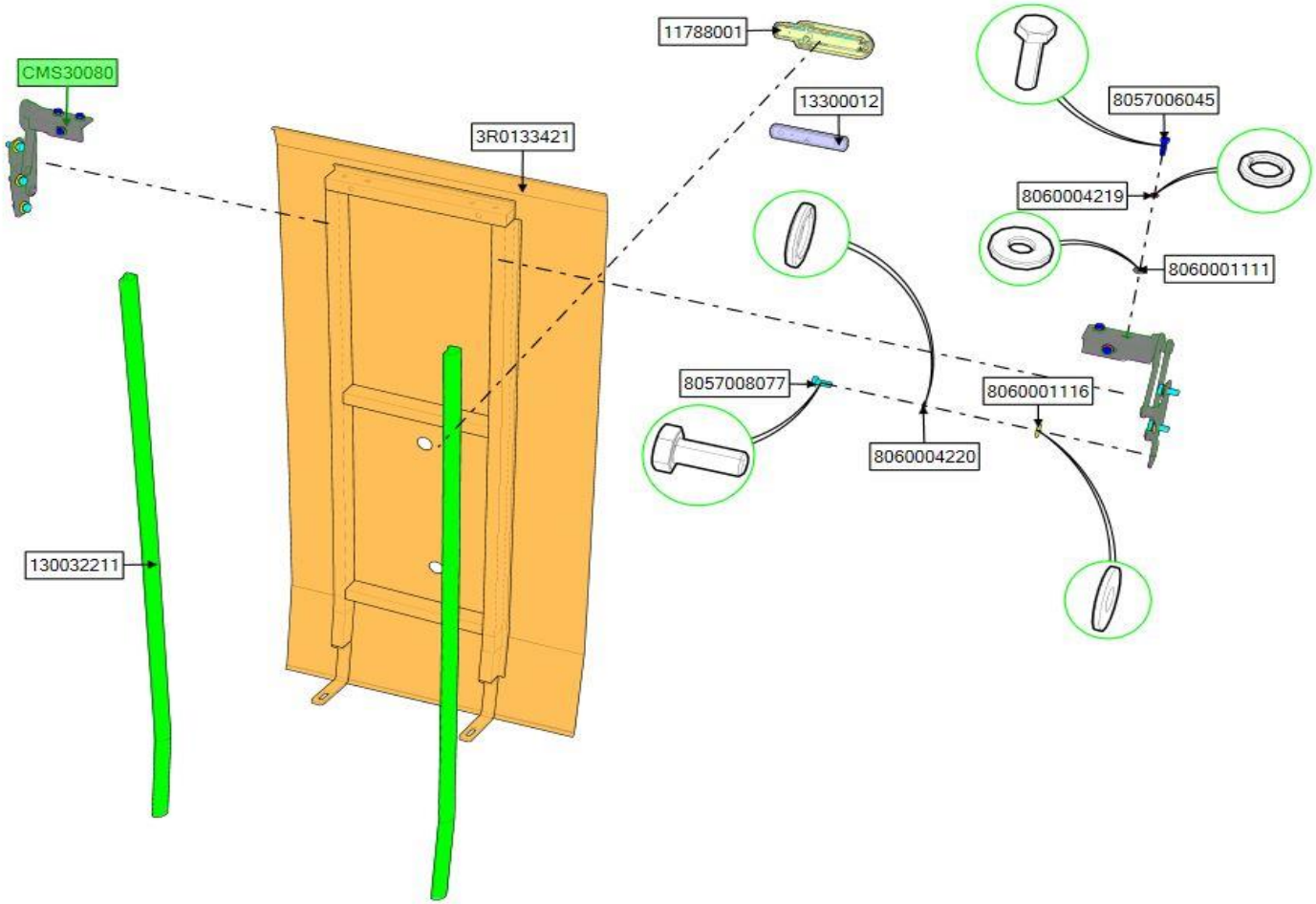


| ASSB_NAME | PART NO. | NAME | QTY |
|---|---|---|---|
| TANK FUEL FLAP LH ASSY | 11788001 | SIDELAMP | 1 |
| | 13300012 | SIDE MARKER LAMP | 1 |
| | 130032211 | RUBBER-SEALING 01 | 2 |
| | 3R0133421 | FLAP COVER | 1 |
| | 8057006045 | BOLT 06020100 | 6 |
| | 8057008077 | BOLT 08020125 | 6 |
| | 8060001111 | WASHER Ø06 | 6 |

| ASSB_NAME | PART NO. | NAME | QTY |
|---|---|---|---|
| TANK FUEL FLAP LH ASSY | 8060001116 | WASHER Ø08 | 6 |
| | 8060004219 | SPLIT WASHER Ø06 | 6 |
| | 8060004220 | SPLIT WASHER Ø08 | 6 |
| | CMS30080 | LH,RH HINGE | 1 |
| | | | |
| | | | |
| | | | |

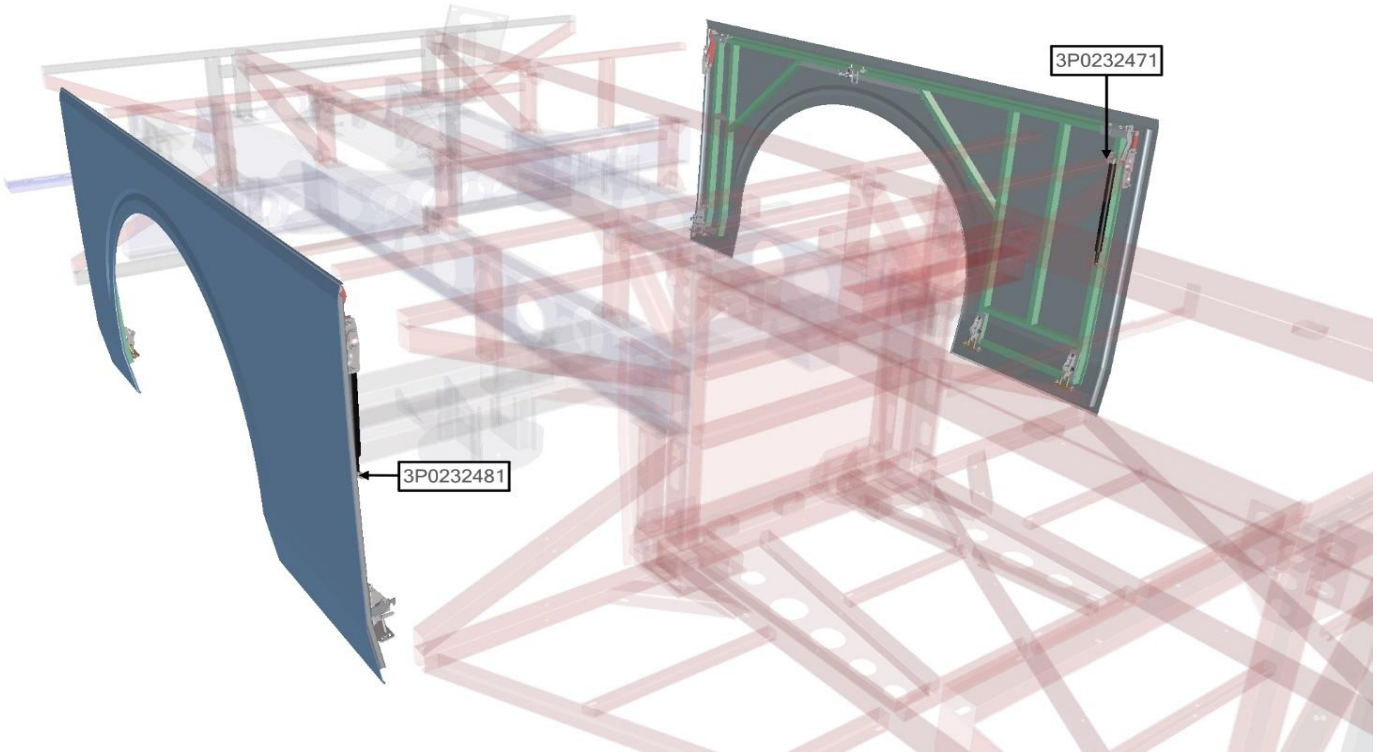


| ASSB_NAME | PART NO. | NAME | QTY |
|---|---|---|---|
| RH REAR FENDER FLAP | 3P0232481 | REAR FENDER FLAP RH | 1 |
| | 3P0232471 | REAR FENDER FLAP LH | 1 |
| | | | |
| | | | |
| | | | |
| | | | |
| | | | |

| ASSB_NAME | PART NO. | NAME | QTY |
|---|---|---|---|
| RH REAR FENDER FLAP | | | |
| | | | |
| | | | |
| | | | |
| | | | |
| | | | |
| | | | |

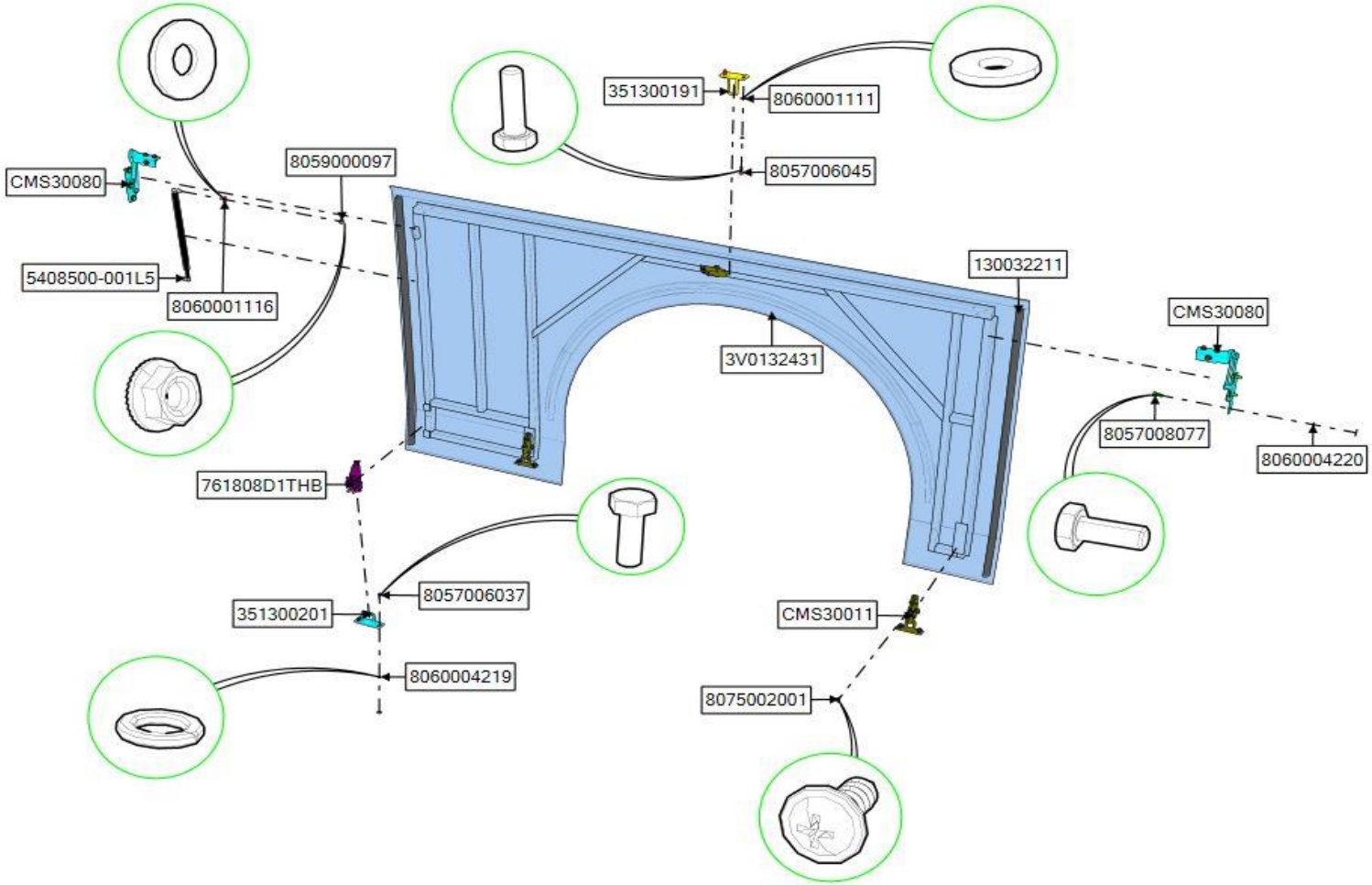


| ASSB_NAME | PART NO. | NAME | QTY |
|---|---|---|---|
| REAR FENDER FLAP RH | 761808D1THB | LOCK | 1 |
| | 5408500-001L5 | LIFTER - ASSY | 1 |
| | 130032211 | RUBBER-SEALING 01 | 2 |
| | 351300191 | STRIKER 01 | 1 |
| | 351300201 | STRIKER 02 | 1 |
| | 3V0132431 | RH FLAP COVER | 1 |
| | 8057006037 | BOLT 06015100 | 6 |

| ASSB_NAME | PART NO. | NAME | QTY |
|---|---|---|---|
| REAR FENDER FLAP RH | 8057006045 | BOLT 06020100 | 10 |
| | 8057008077 | BOLT 08020125 | 6 |
| | 8059000097 | NUT 08125 | 1 |
| | 8060001111 | WASHER Ø06 | 16 |
| | 8060001116 | WASHER Ø08 | 7 |
| | 8060004219 | SPLIT WASHER Ø06 | 16 |
| | 8060004220 | SPLIT WASHER Ø08 | 6 |

| ASSB_NAME | PART NO. | NAME | QTY |
|---|---|---|---|
| REAR FENDER FLAP RH | 8075002001 | SCREW 0515 | 9 |
| | CMS30011 | LOCK - ASSY | 5 |
| | CMS30080 | LH,RH HINGE | 1 |

| ASSB_NAME | PART NO. | NAME | QTY |
|---|---|---|---|
| REAR FENDER FLAP RH | | | |

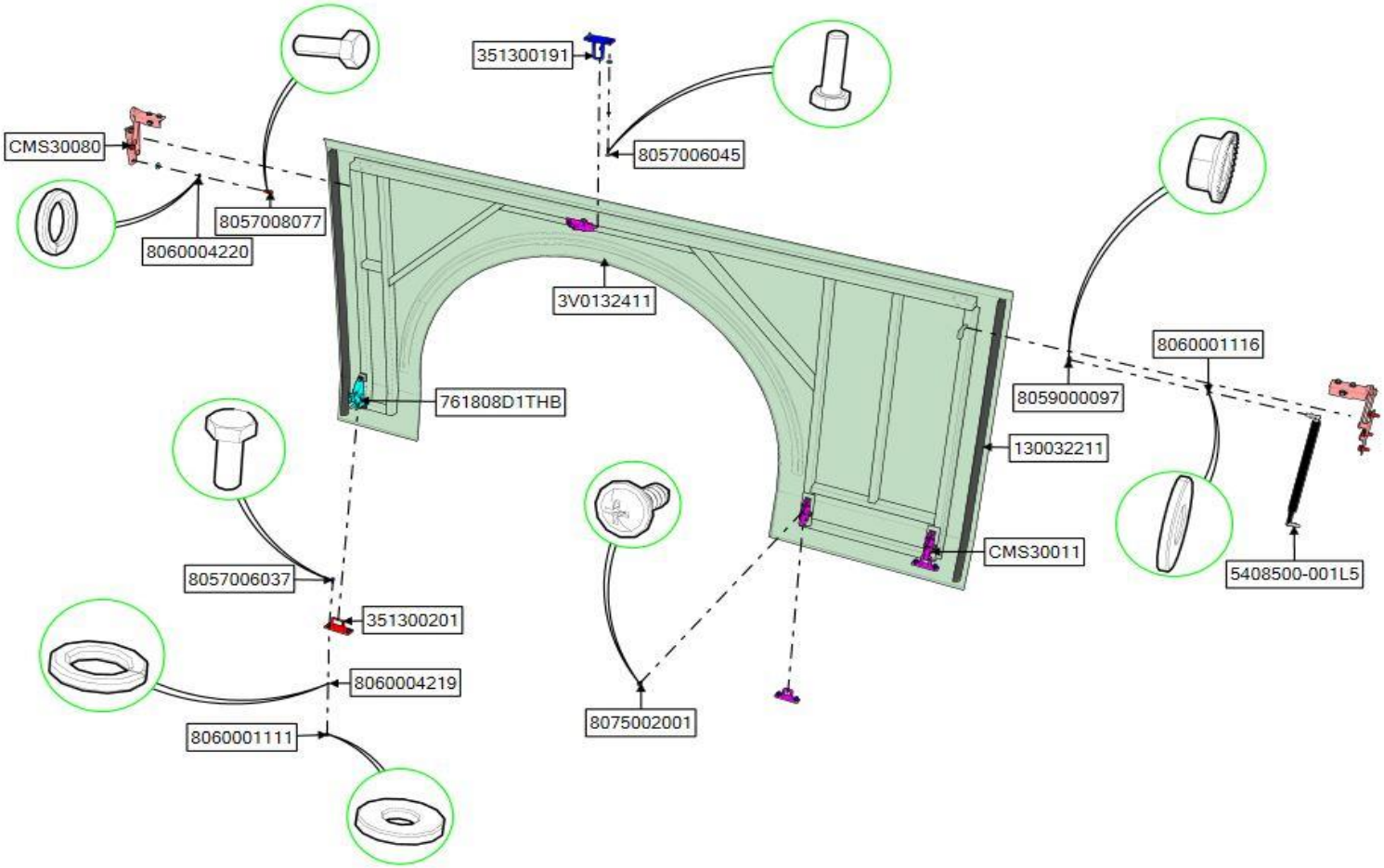


| ASSB_NAME | PART NO. | NAME | QTY |
|---|---|---|---|
| REAR FENDER FLAP LH | 761808D1THB | LOCK | 1 |
| | 5408500-001L5 | LIFTER - ASSY | 1 |
| | 130032211 | RUBBER-SEALING 01 | 2 |
| | 351300191 | STRIKER 01 | 1 |
| | 351300201 | STRIKER 02 | 1 |
| | 3V0132411 | LH FLAP COVER | 1 |
| | 8057006037 | BOLT 06015100 | 6 |

| ASSB_NAME | PART NO. | NAME | QTY |
|---|---|---|---|
| REAR FENDER FLAP LH | 8057006045 | BOLT 06020100 | 10 |
| | 8057008077 | BOLT 08020125 | 6 |
| | 8059000097 | NUT 08125 | 1 |
| | 8060001111 | WASHER Ø06 | 16 |
| | 8060001116 | WASHER Ø08 | 7 |
| | 8060004219 | SPLIT WASHER Ø06 | 16 |
| | 8060004220 | SPLIT WASHER Ø08 | 6 |

| ASSB_NAME | PART NO. | NAME | QTY |
|---|---|---|---|
| REAR FENDER FLAP LH | 8075002001 | SCREW 0515 | 9 |
| | CMS30011 | LOCK | 3 |
| | CMS30080 | LH,RH HINGE | 1 |

| ASSB_NAME | PART NO. | NAME | QTY |
|---|---|---|---|
| REAR FENDER FLAP LH | | | |

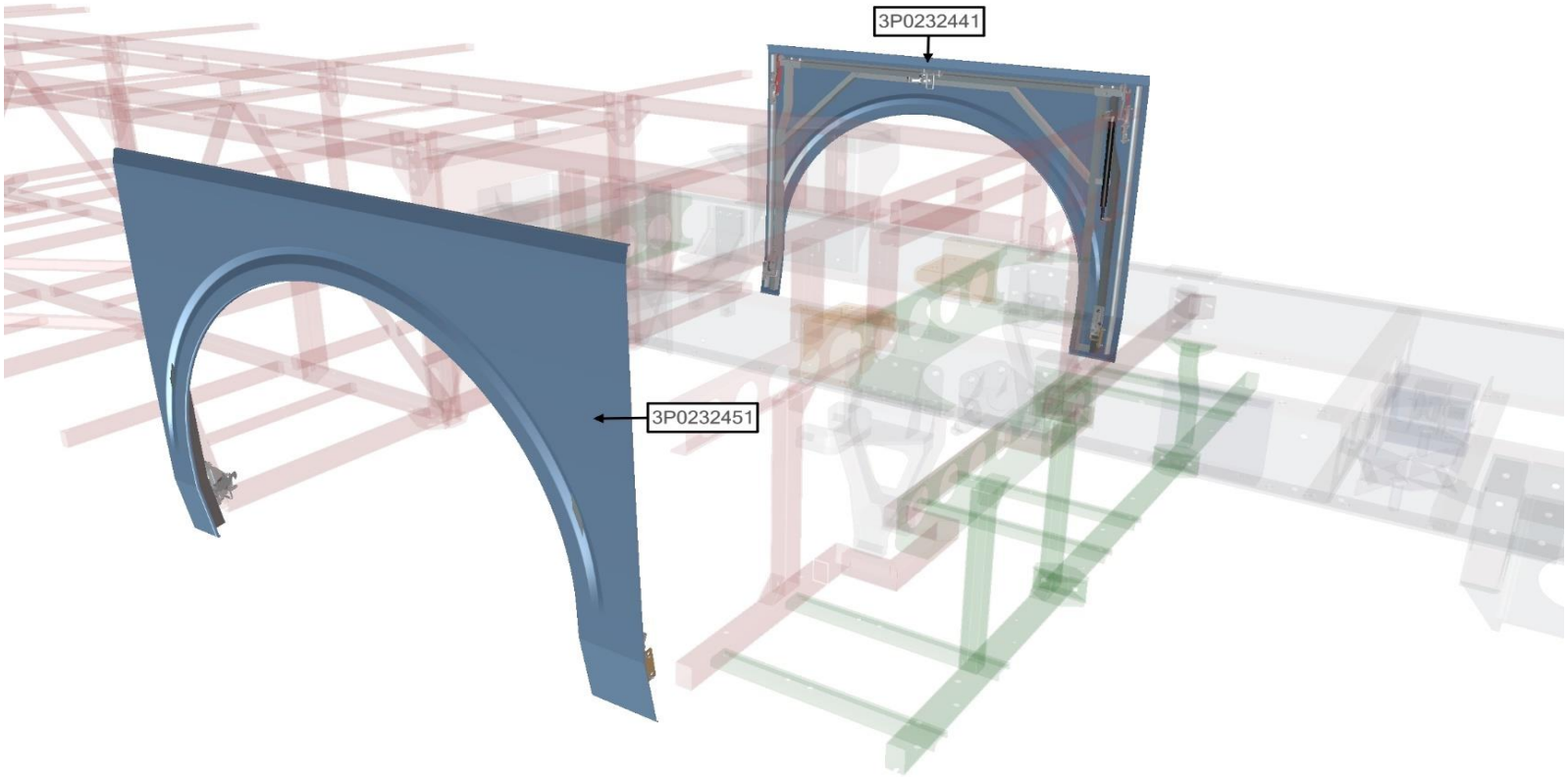


| ASSB_NAME | PART NO. | NAME | QTY |
|---|---|---|---|
| FRONT FENDER FLAP ASSY | 3P0232451 | FRONT FENDER FLAP RH | 1 |
| | 3P0232441 | FRONT FENDER FLAP LH | 1 |
| | | | |
| | | | |
| | | | |
| | | | |
| | | | |

| ASSB_NAME | PART NO. | NAME | QTY |
|---|---|---|---|
| FRONT FENDER FLAP ASSY | | | |
| | | | |
| | | | |
| | | | |
| | | | |
| | | | |
| | | | |

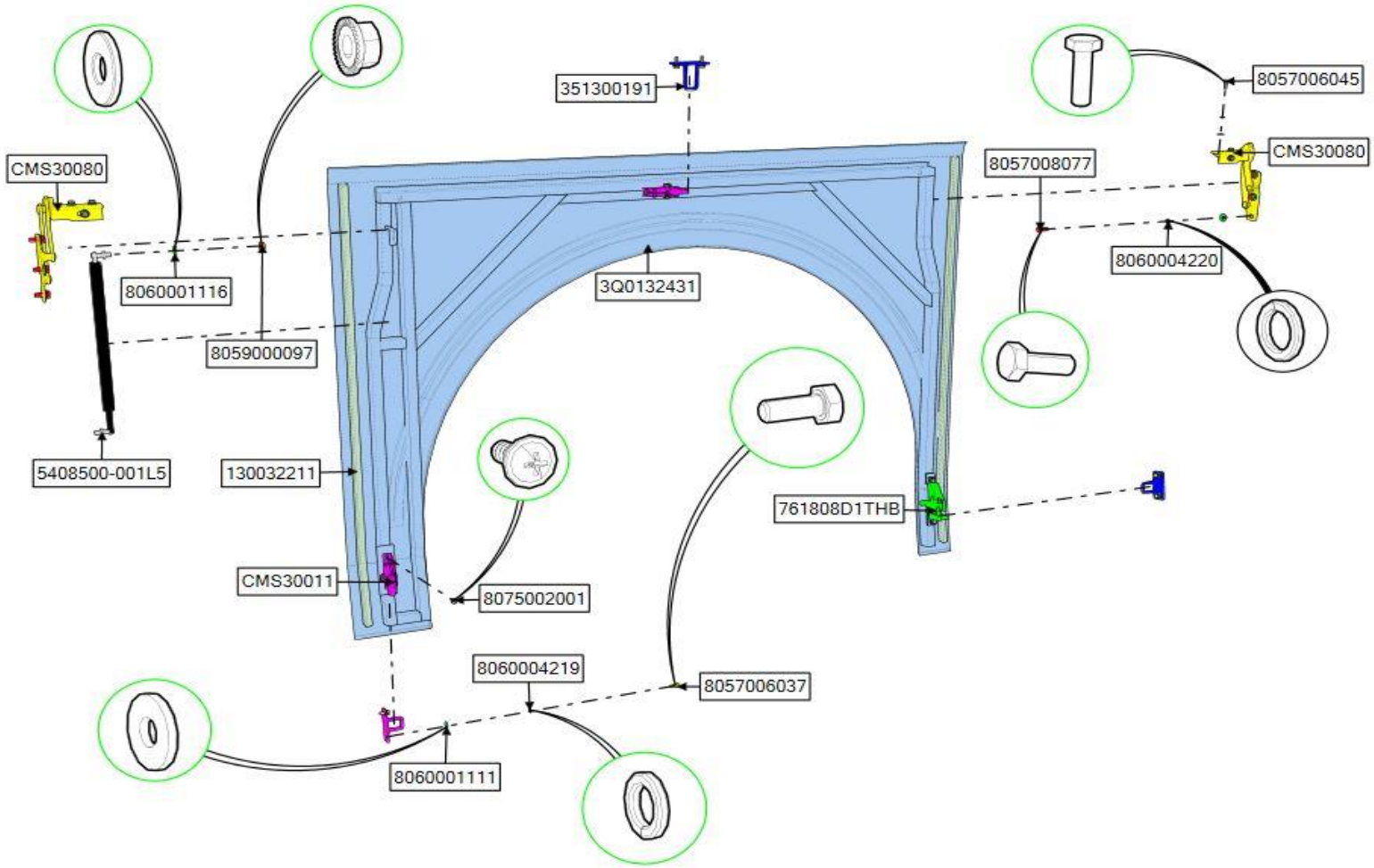


| ASSB_NAME | PART NO. | NAME | QTY |
|---|---|---|---|
| FRONT FENDER FLAP RH | 761808D1THB | LOCK | 1 |
| | 5408500-001L5 | LIFTER - ASSY | 1 |
| | 130032211 | RUBBER-SEALING 01 | 2 |
| | 351300191 | STRIKER 01 | 2 |
| | 3Q0132431 | RH FLAP COVER | 1 |
| | 8057006037 | BOLT 06015100 | 4 |
| | 8057006045 | BOLT 06020100 | 10 |

| ASSB_NAME | PART NO. | NAME | QTY |
|---|---|---|---|
| FRONT FENDER FLAP RH | 8057008077 | BOLT 08020125 | 6 |
| | 8059000097 | NUT 08125 | 1 |
| | 8060001111 | WASHER Ø06 | 14 |
| | 8060001116 | WASHER Ø08 | 7 |
| | 8060004219 | SPLIT WASHER Ø06 | 14 |
| | 8060004220 | SPLIT WASHER Ø08 | 6 |
| | 8075002001 | SCREW 0515 | 6 |

| ASSB_NAME | PART NO. | NAME | QTY |
|---|---|---|---|
| FRONT FENDER FLAP RH | CMS30011 | LOCK | 2 |
| | CMS30080 | LH,RH HINGE | 2 |

| ASSB_NAME | PART NO. | NAME | QTY |
|---|---|---|---|
| FRONT FENDER FLAP RH | | | |

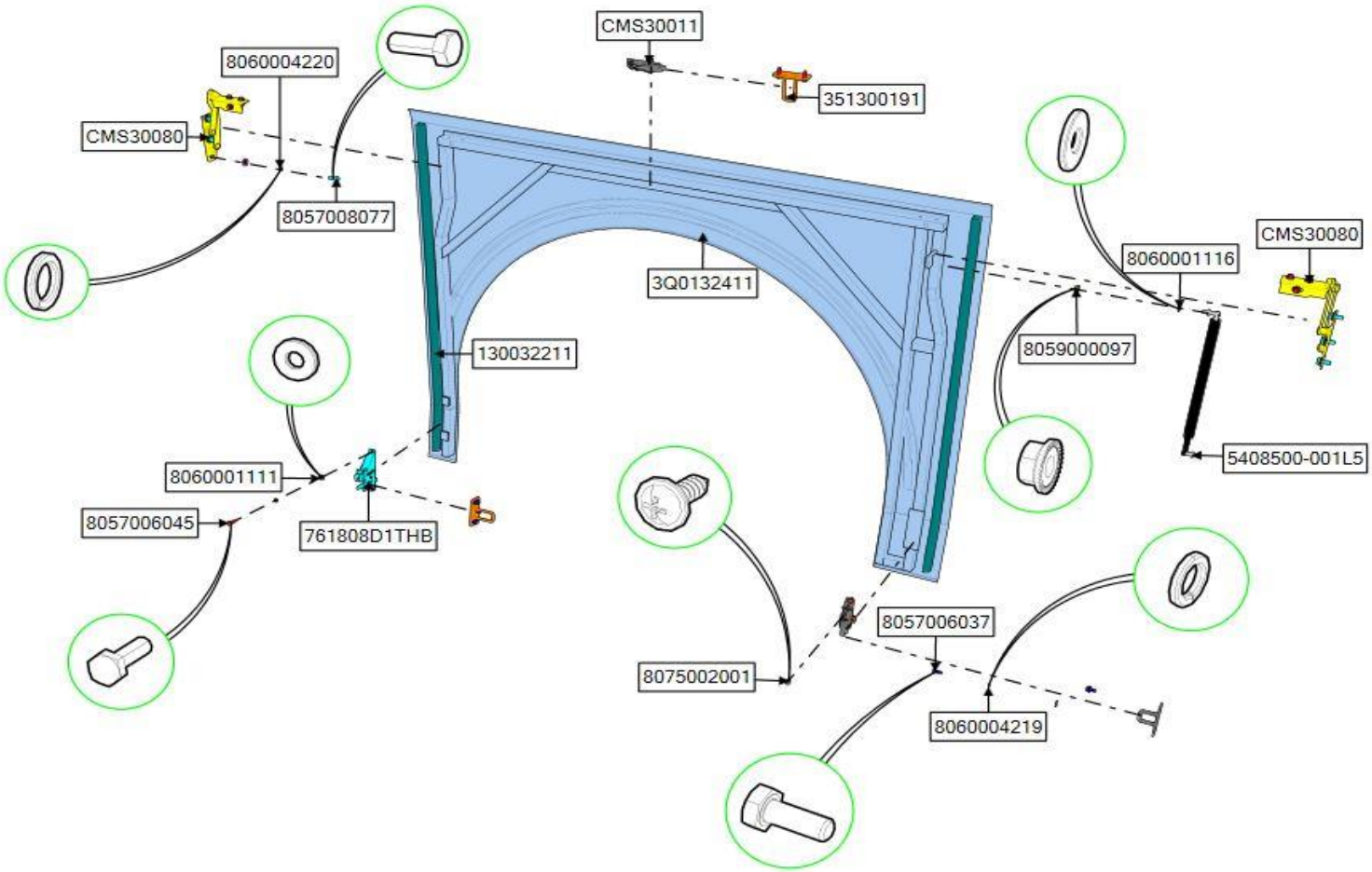


| ASSB_NAME | PART NO. | NAME | QTY |
|---|---|---|---|
| FRONT FENDER FLAP LH | 761808D1THB | LOCK | 1 |
| | 5408500-001L5 | LIFTER - ASSY | 1 |
| | 130032211 | RUBBER-SEALING 01 | 2 |
| | 351300191 | STRIKER 01 | 2 |
| | 3Q0132411 | LH FLAP COVER | 1 |
| | 8057006037 | BOLT 06015100 | 4 |
| | 8057006045 | BOLT 06020100 | 10 |

| ASSB_NAME | PART NO. | NAME | QTY |
|---|---|---|---|
| FRONT FENDER FLAP LH | 8057008077 | BOLT 08020125 | 6 |
| | 8059000097 | NUT 08125 | 1 |
| | 8060001111 | WASHER Ø06 | 14 |
| | 8060001116 | WASHER Ø08 | 7 |
| | 8060004219 | SPLIT WASHER Ø06 | 14 |
| | 8060004220 | SPLIT WASHER Ø08 | 6 |
| | 8075002001 | SCREW 0515 | 6 |

| ASSB_NAME | PART NO. | NAME | QTY |
|---|---|---|---|
| FRONT FENDER FLAP LH | CMS30011 | LOCK | 2 |
| | CMS30080 | LH,RH HINGE | 2 |

| ASSB_NAME | PART NO. | NAME | QTY |
|---|---|---|---|
| FRONT FENDER FLAP RH | | | |

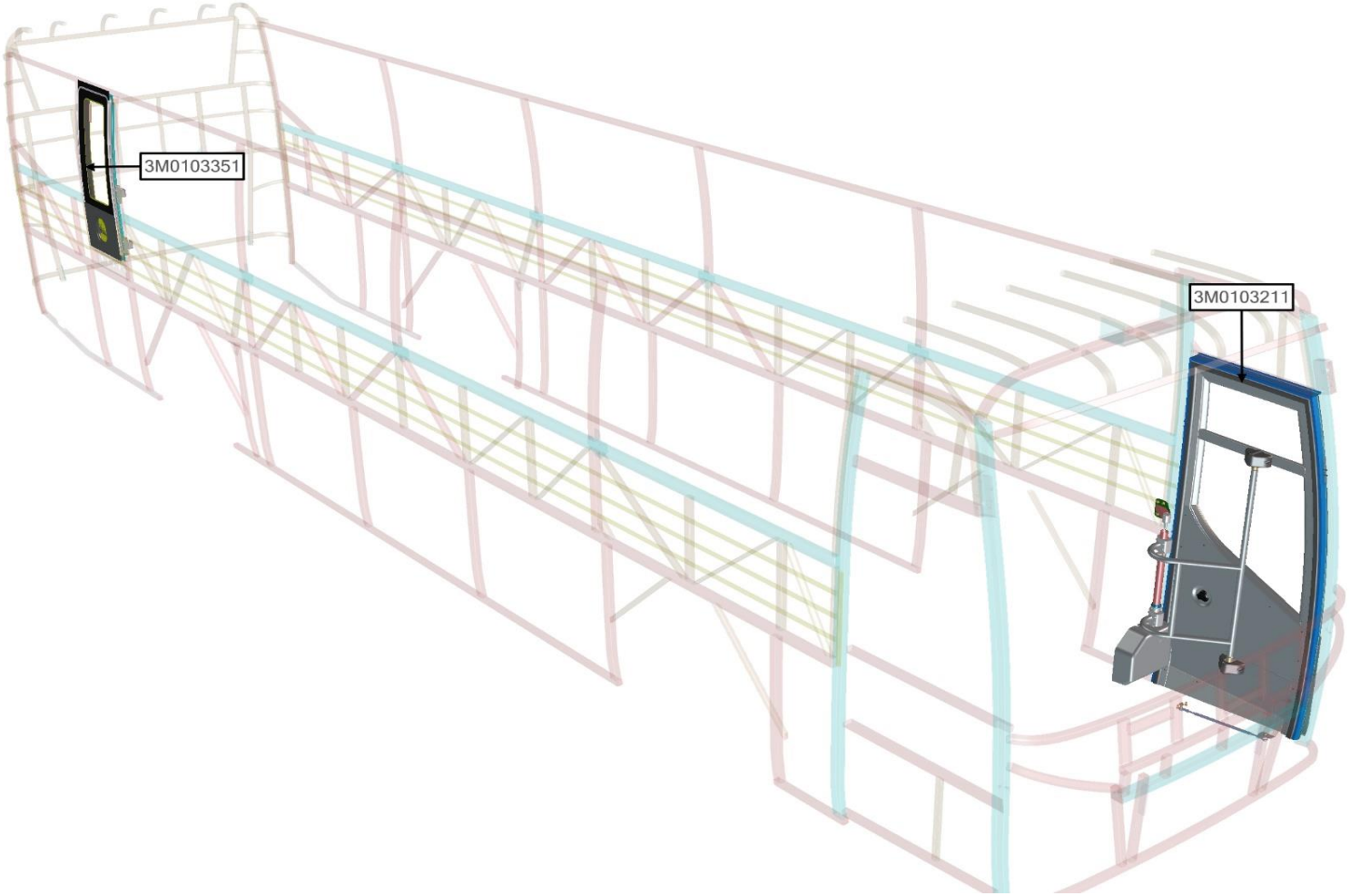


| ASSB_NAME | PART NO. | NAME | QTY |
|---|---|---|---|
| DOOR | 3M0103211 | PASSENGER DOOR | 1 |
| | 3M0103351 | EMERGENCY DOOR | 1 |
| | | | |
| | | | |
| | | | |
| | | | |
| | | | |

| ASSB_NAME | PART NO. | NAME | QTY |
|---|---|---|---|
| DOOR - ASSY | | | |
| | | | |
| | | | |
| | | | |
| | | | |
| | | | |
| | | | |

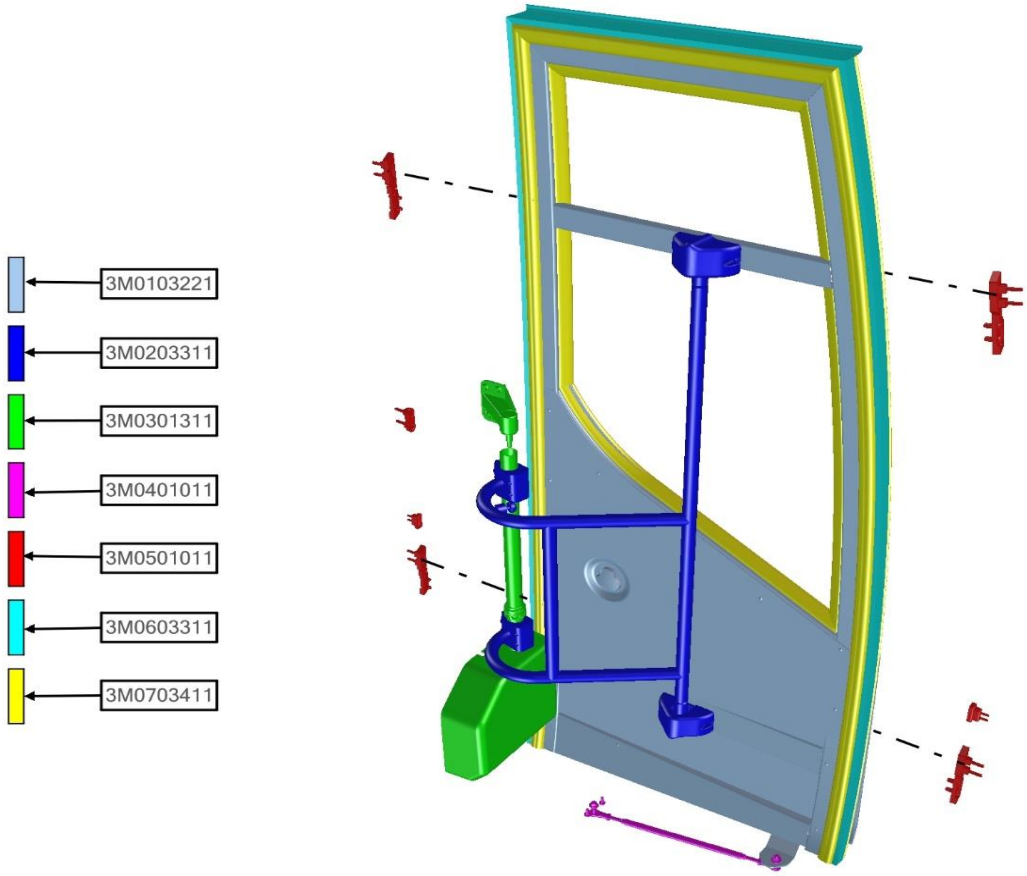


| ASSB_NAME | PART NO. | NAME | QTY |
|---|---|---|---|
| PASSENGER DOOR | 3M0203311 | PASSENGER DOOR LEVER ARM | 1 |
| | 3M0501011 | STOPPER - ASSY | 1 |
| | 3M0401011 | PASSENGER DOOR TURNBUCKLE - ASSY | 1 |
| | 3M0301311 | PASSENGER DOOR PUMB PILLAR - ASSY | 1 |
| | 3M0103221 | DOOR - ASSY | 1 |
| | 3M0603311 | MOULDING | 1 |
| | 3M0703411 | WEATHERSTRIP | 1 |

| ASSB_NAME | PART NO. | NAME | QTY |
|---|---|---|---|
| PASSENGER DOOR | | | |
| | | | |
| | | | |
| | | | |
| | | | |
| | | | |
| | | | |

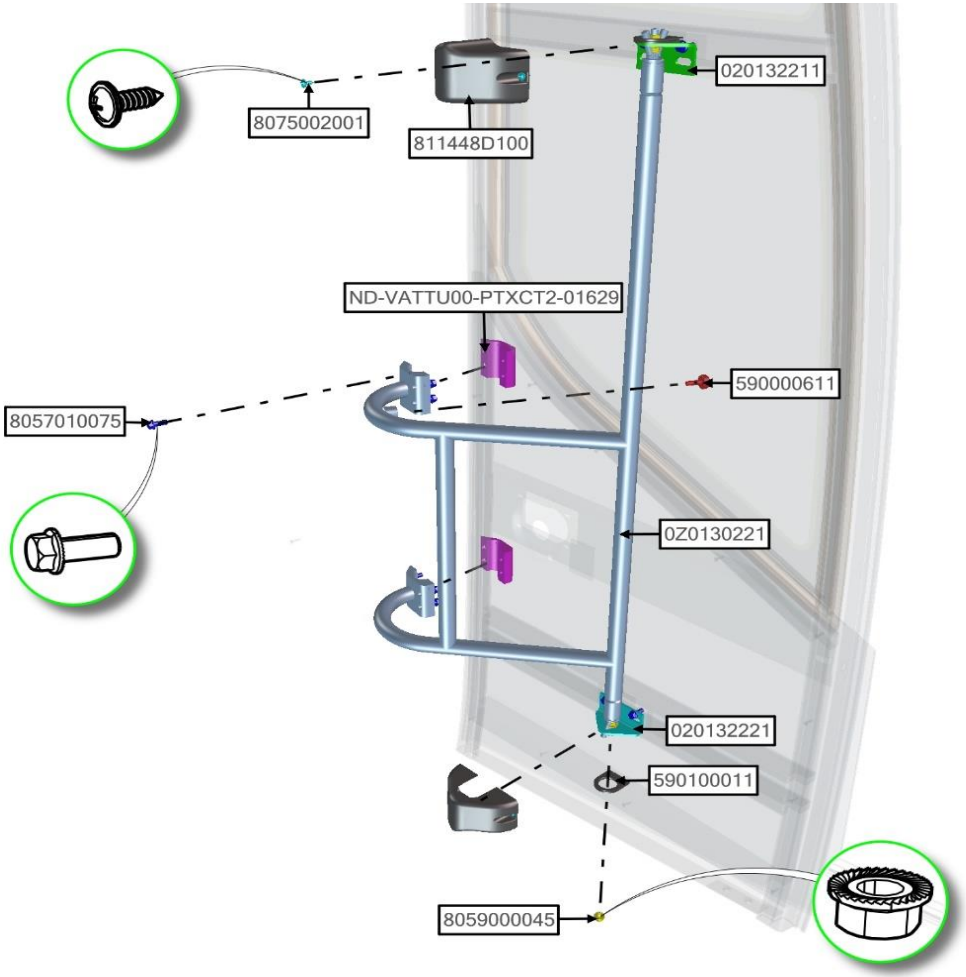


| ASSB_NAME | PART NO. | NAME | QTY |
|---|---|---|---|
| PASSENGER DOOR LEVER ARM | 8057010075 | CONNECTOR 620046 | 12 |
| | 0Z0130221 | DOOR LEVER ARM | 1 |
| | 811448D100 | COVER | 2 |
| | 020132211 | BRACKET | 1 |
| | 020132221 | BRACKET | 1 |
| | ND-VATTU00-PTXCT2-01629 | BRACKET | 2 |
| | 8389002010 | BOLT | 1 |

| ASSB_NAME | PART NO. | NAME | QTY |
|---|---|---|---|
| PASSENGER DOOR LEVER ARM | 8075002001 | SCREW 0515 | 4 |
| | 8059000045 | NUT 12125 | 4 |
| | 8389001010 | RUBER | 2 |
| | | | |
| | | | |
| | | | |
| | | | |

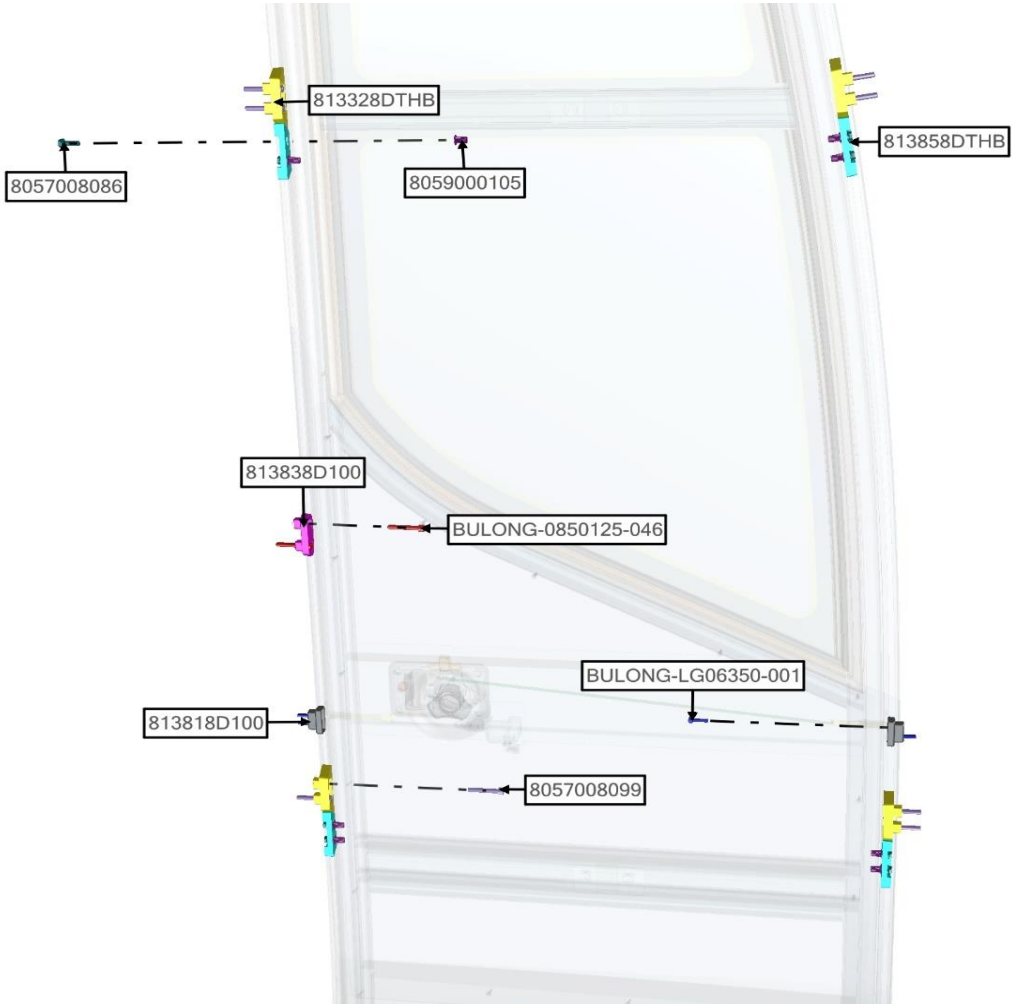


| ASSB_NAME | PART NO. | NAME | QTY |
|---|---|---|---|
| STOPPER - ASSY | BULONG-LG06350-001 | BOLT | 4 |
| | BULONG-0850125-046 | BOLT | 2 |
| | 8057008086 | BOLT 08025125 | 8 |
| | 8057008099 | BOLT | 8 |
| | 813818D100 | STOPPER | 2 |
| | 813858DTHB | RETAINER - ASSY | 4 |
| | 813838D100 | STOPPER | 1 |

| ASSB_NAME | PART NO. | NAME | QTY |
|---|---|---|---|
| STOPPER - ASSY | 813328DTHB | RETAINER - ASSY | 4 |
| | 8059000105 | NUT 08125 | 8 |
| | | | |
| | | | |
| | | | |
| | | | |
| | | | |

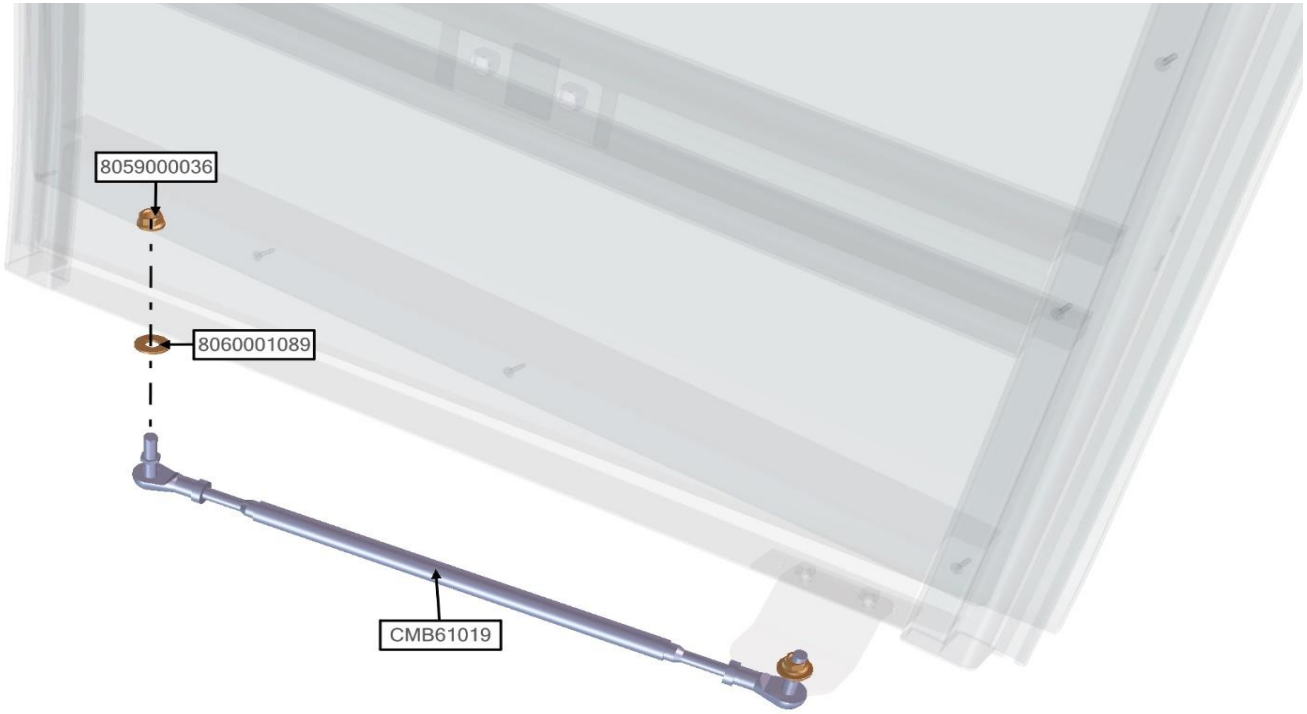


| ASSB_NAME | PART NO. | NAME | QTY |
|---|---|---|---|
| PASSENGER DOOR TURNBUCKLE - ASSY | CMB61019 | DOOR TURNBUCKLE | 1 |
| | 8060001089 | WASHER Ø10 | 2 |
| | 8059000036 | NUT 10125 | 2 |
| | | | |
| | | | |
| | | | |
| | | | |

| ASSB_NAME | PART NO. | NAME | QTY |
|---|---|---|---|
| PASSENGER DOOR TURNBUCKLE - ASSY | | | |
| | | | |
| | | | |
| | | | |
| | | | |
| | | | |
| | | | |

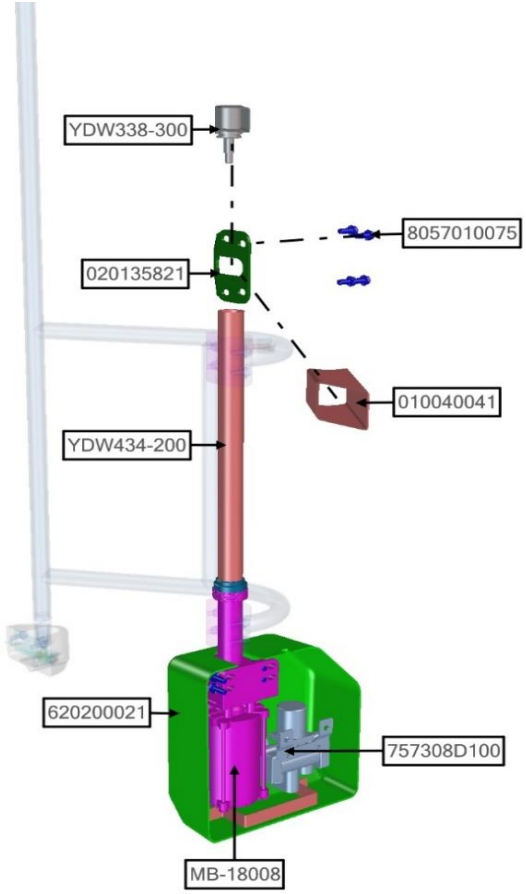


| ASSB_NAME | PART NO. | NAME | QTY |
|---|---|---|---|
| PASSENGER DOOR PUMB PILLAR - ASSY | 8057010075 | CONNECTOR 620046 | 8 |
| | 620200021 | COVER | 1 |
| | 020135821 | BRACKET | 1 |
| | 757308D100 | MAGNETIC VALVE | 1 |
| | MB-18008 | DOOR CYLINDER | 1 |
| | YDW434-200 | SHAFT | 1 |
| | 010040041 | SQUARE | 1 |

| ASSB_NAME | PART NO. | NAME | QTY |
|---|---|---|---|
| PASSENGER DOOR PUMB PILLAR - ASSY | YDW338-300 | SHAFT-UP | 1 |
| | | | |
| | | | |
| | | | |
| | | | |
| | | | |
| | | | |

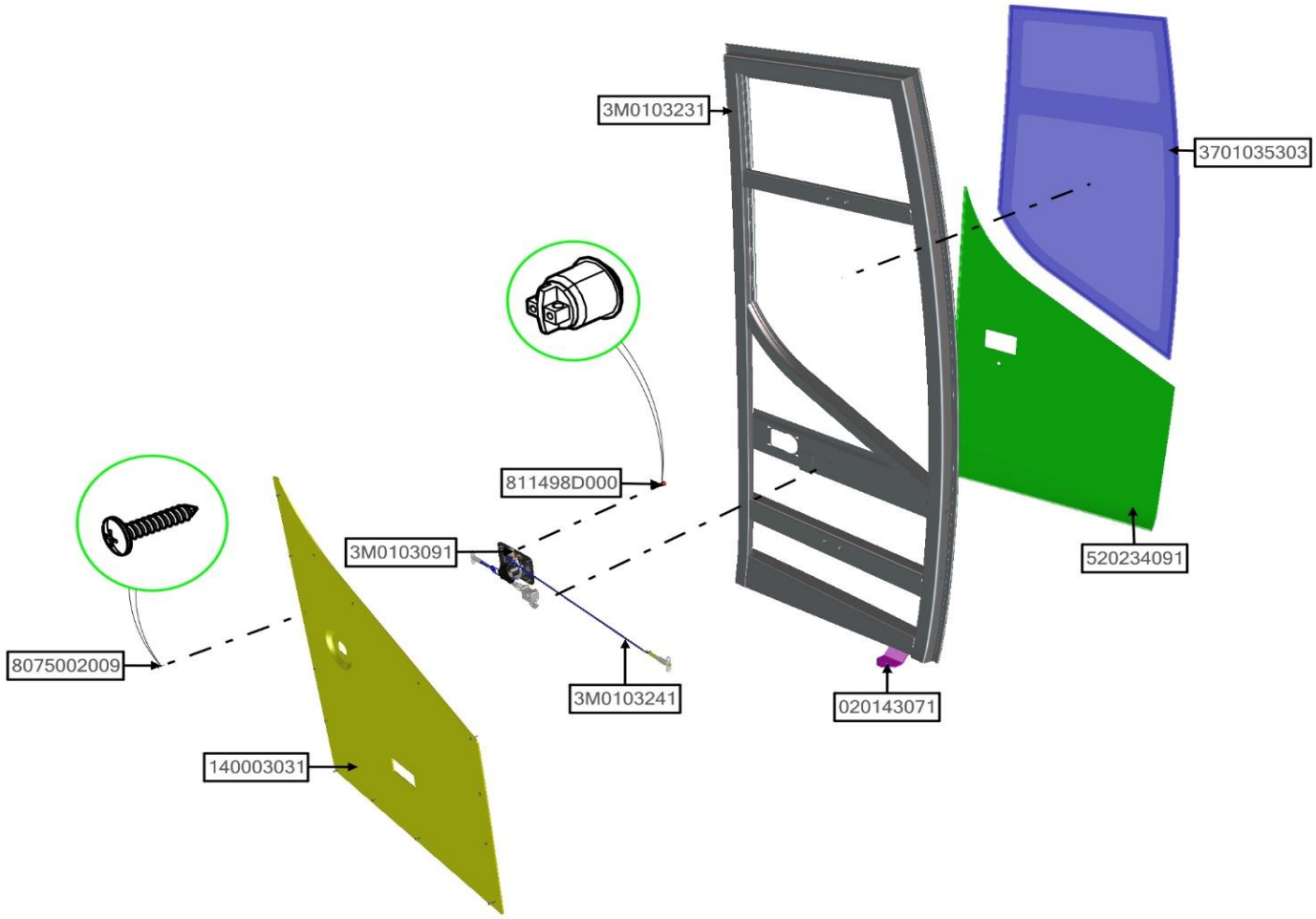


| ASSB_NAME | PART NO. | NAME | QTY |
|---|---|---|---|
| DOOR - ASSY | 3M0103231 | ALUMINUM FRAME DOOR | 1 |
| | 3701035303 | PASSENGER DOOR GLASS | 1 |
| | 811498D000 | SWITCH | 1 |
| | 020143071 | BRACKET | 1 |
| | 3M0103091 | HANDER | 1 |
| | 140003031 | #N/A | 1 |
| | 8075002009 | SCREW 0515 | 15 |

| ASSB_NAME | PART NO. | NAME | QTY |
|---|---|---|---|
| DOOR - ASSY | 520234091 | COVER | 1 |
| | | | |
| | | | |
| | | | |
| | | | |
| | | | |
| | | | |

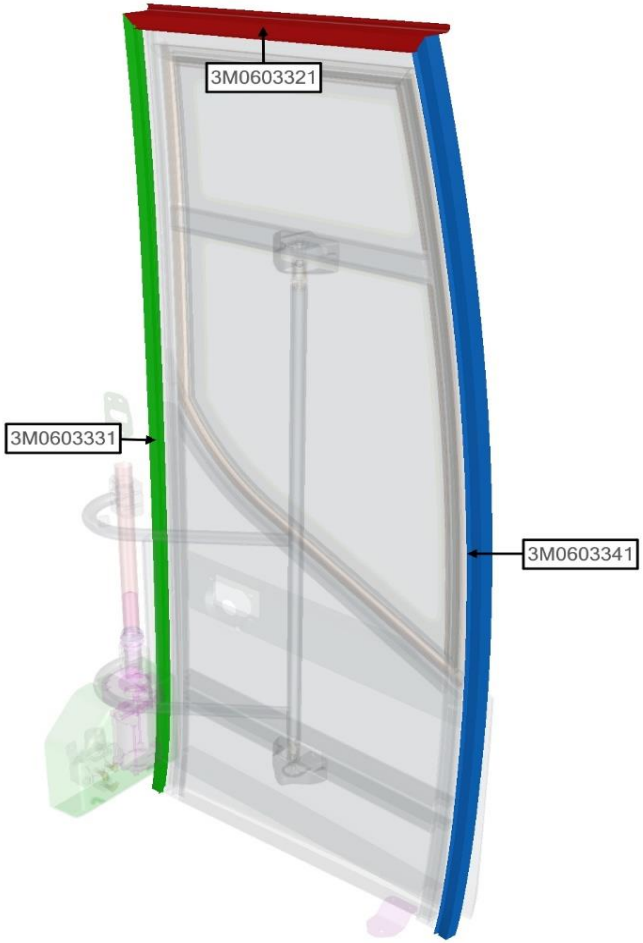


| ASSB_NAME | PART NO. | NAME | QTY |
|---|---|---|---|
| MOULDING - ASSY | 3M0603321 | MOULDING 01 | 1 |
| | 3M0603331 | MOULDING 02 | 1 |
| | 3M0603341 | MOULDING 03 | 1 |
| | | | |
| | | | |
| | | | |
| | | | |

| ASSB_NAME | PART NO. | NAME | QTY |
|---|---|---|---|
| MOULDING - ASSY | | | |
| | | | |
| | | | |
| | | | |
| | | | |
| | | | |
| | | | |

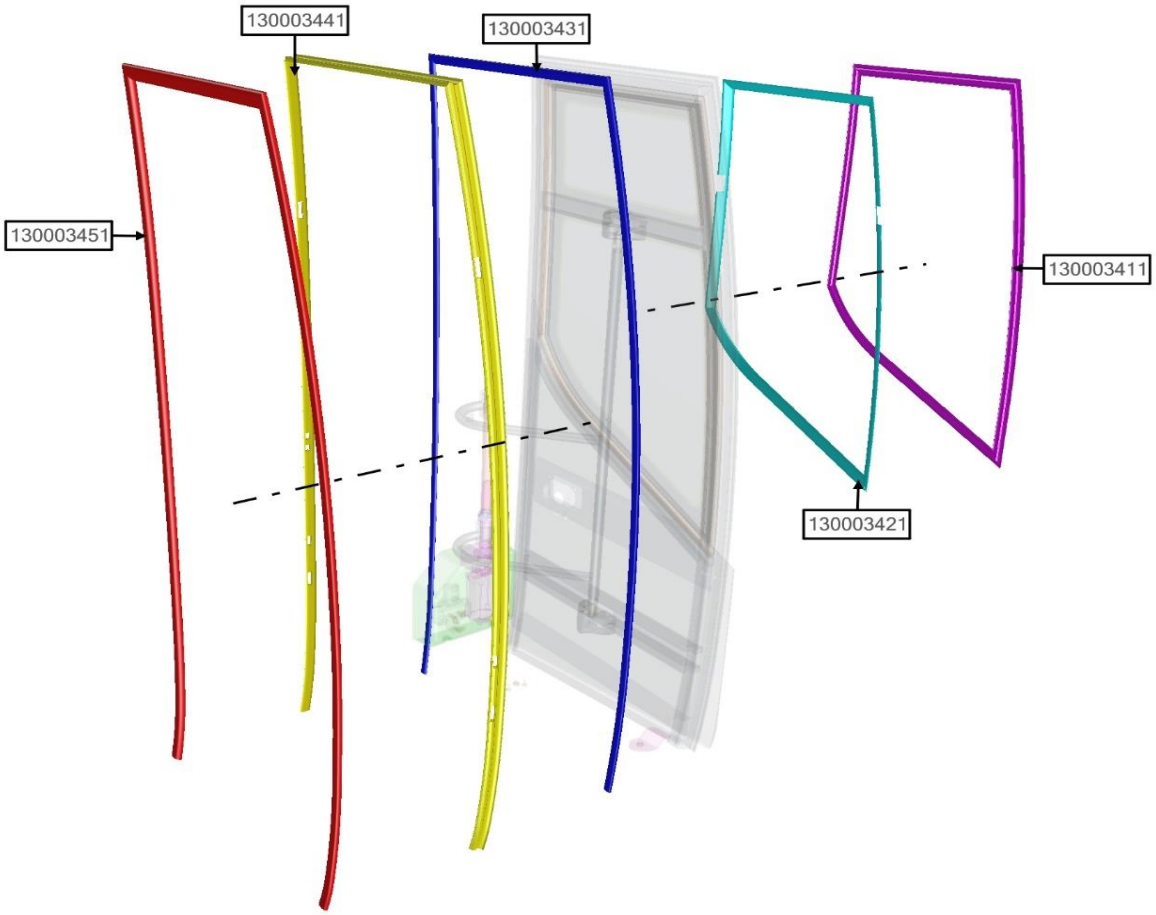


| ASSB_NAME | PART NO. | NAME | QTY |
|---|---|---|---|
| WEATHERSTRIP | 130003411 | WEATHERSTRIP | 1 |
| | 130003421 | WEATHERSTRIP | 1 |
| | 130003431 | RUBBER-SEALING | 1 |
| | 130003441 | WEATHERSTRIP | 1 |
| | 130003451 | WEATHERSTRIP | 1 |
| | | | |
| | | | |

| ASSB_NAME | PART NO. | NAME | QTY |
|---|---|---|---|
| WEATHERSTRIP | | | |
| | | | |
| | | | |
| | | | |
| | | | |
| | | | |
| | | | |

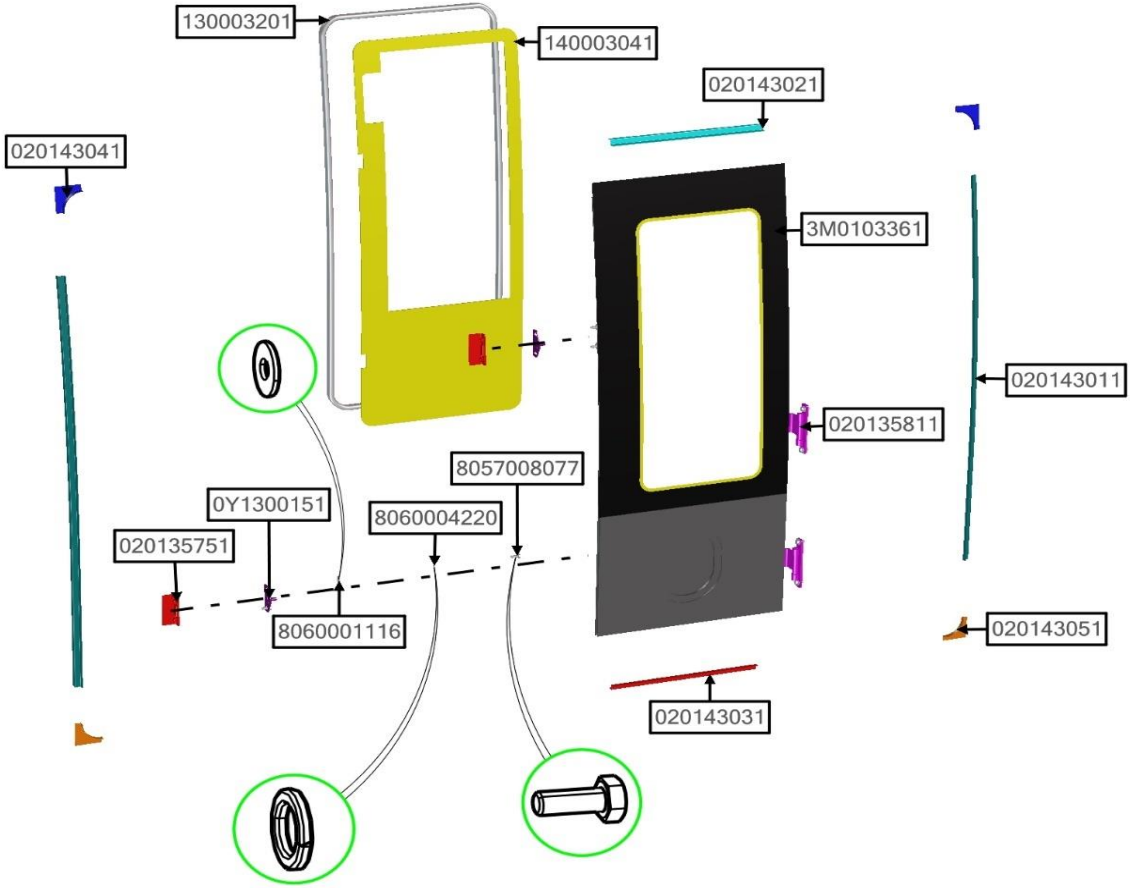


| ASSB_NAME | PART NO. | NAME | QTY |
|---|---|---|---|
| EMERGENCY DOOR | 0Y1300151 | STOPPER | 2 |
| | 3M0103361 | DOOR | 1 |
| | 020135751 | BRACKET | 2 |
| | 020135811 | HINGE | 2 |
| | 020143011 | MOULDING 01 | 2 |
| | 020143021 | MOULDING 02 | 1 |
| | 020143031 | MOULDING 03 | 1 |

| ASSB_NAME | PART NO. | NAME | QTY |
|---|---|---|---|
| EMERGENCY DOOR | 020143041 | MOULDING 04 | 2 |
| | 020143051 | MOULDING 05 | 2 |
| | 130003201 | WEATHERSTRIP | 1 |
| | 140003041 | #N/A | 1 |
| | 8057008077 | BOLT 08020125 | 12 |
| | 8060001116 | WASHER Ø08 | 12 |
| | 8060004220 | SPLIT WASHER Ø08 | 12 |

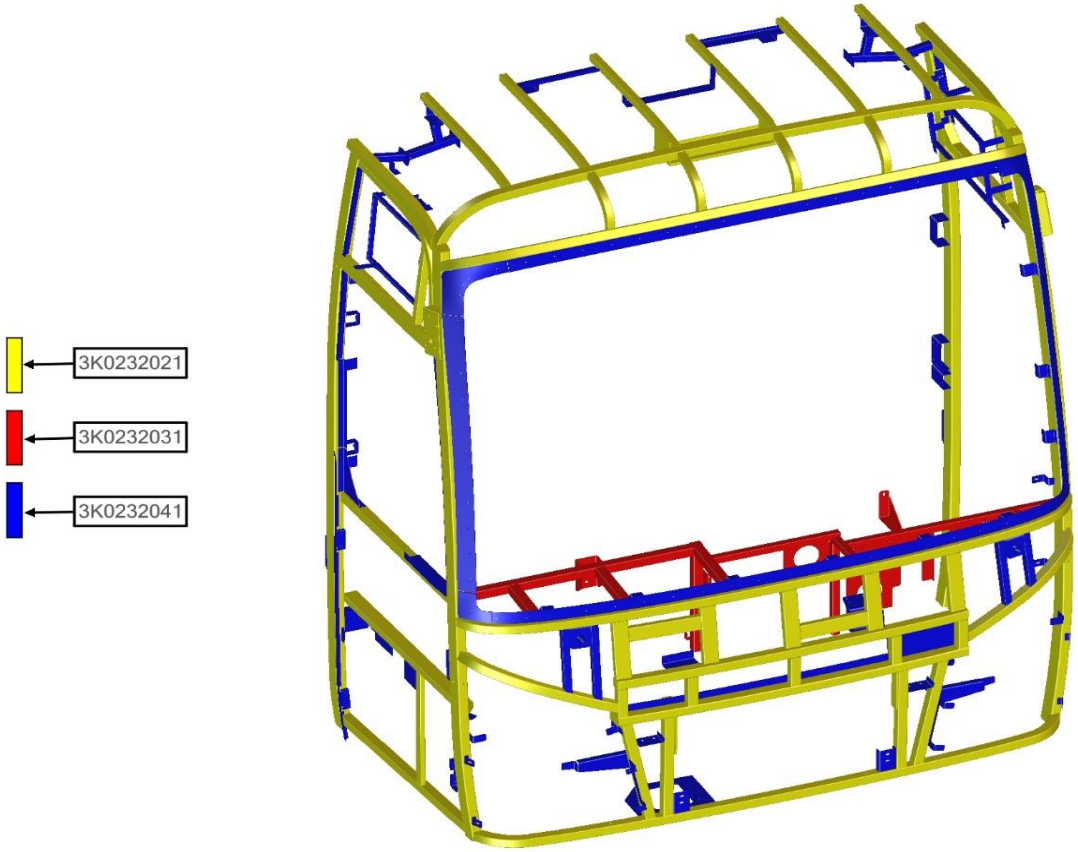


| ASSB_NAME | PART NO. | NAME | QTY |
|---|---|---|---|
| FRONT FRAME - ASSY | 3K0232031 | DASHBOARD FRAME | 1 |
| | 3K0232041 | CONNECTING ITEM | 1 |
| | 3K0232021 | FRONT FRAME | 1 |
| | | | |
| | | | |
| | | | |
| | | | |

| ASSB_NAME | PART NO. | NAME | QTY |
|---|---|---|---|
| FRONT FRAME - ASSY | | | |
| | | | |
| | | | |
| | | | |
| | | | |
| | | | |
| | | | |

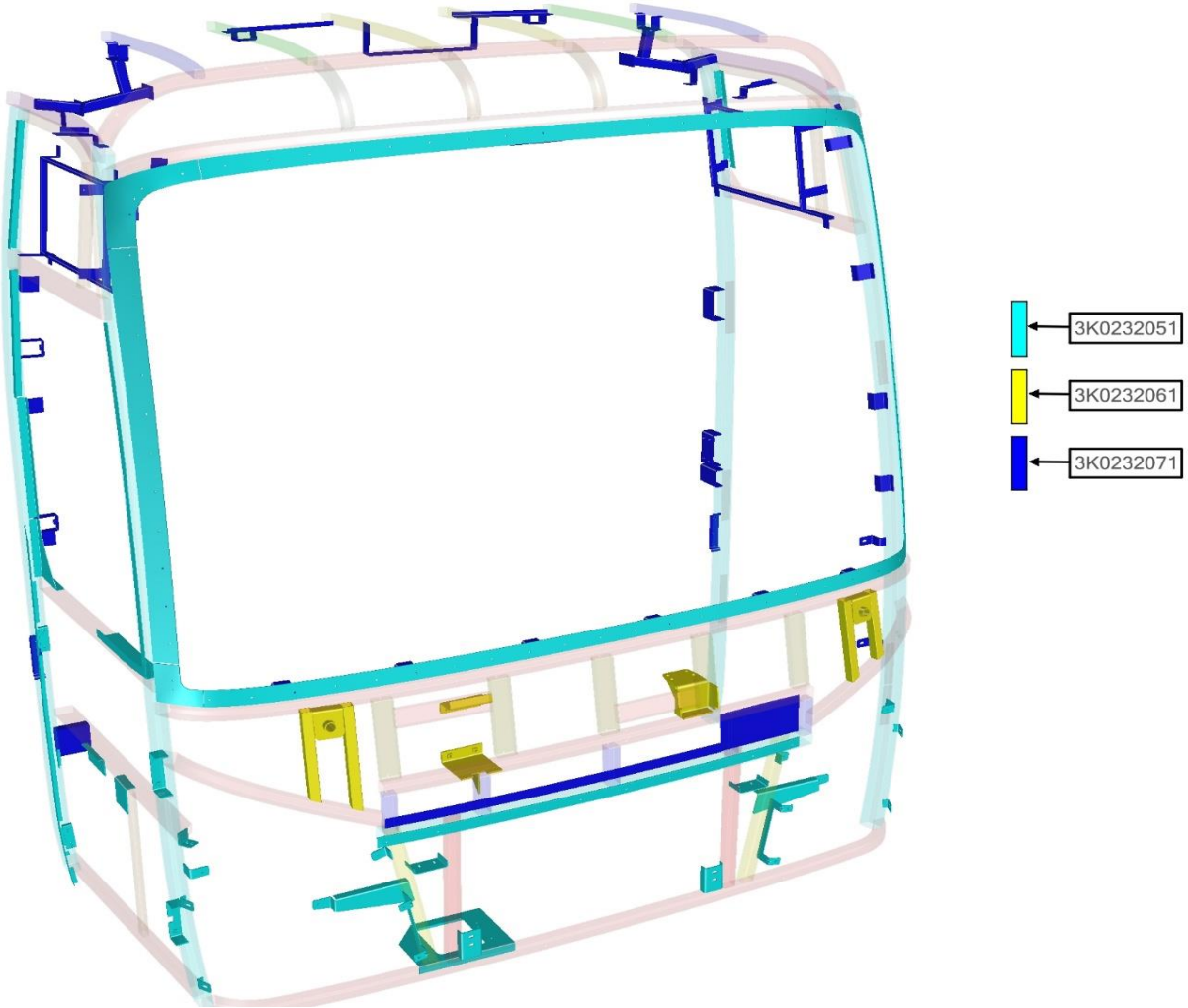


| ASSB_NAME | PART NO. | NAME | QTY |
|---|---|---|---|
| CONNECTING ITEM | 3K0232061 | WINDSCREEN WIPER CONNECTING ITEM | 1 |
| | 3K0232051 | EXTERIOR CONNECTING ITEM | 1 |
| | 3K0232071 | INTERIOR CONNECTING ITEM | 1 |
| | | | |
| | | | |
| | | | |
| | | | |
| | | | |

| ASSB_NAME | PART NO. | NAME | QTY |
|---|---|---|---|
| CONNECTING ITEM | | | |
| | | | |
| | | | |
| | | | |
| | | | |
| | | | |
| | | | |
| | | | |

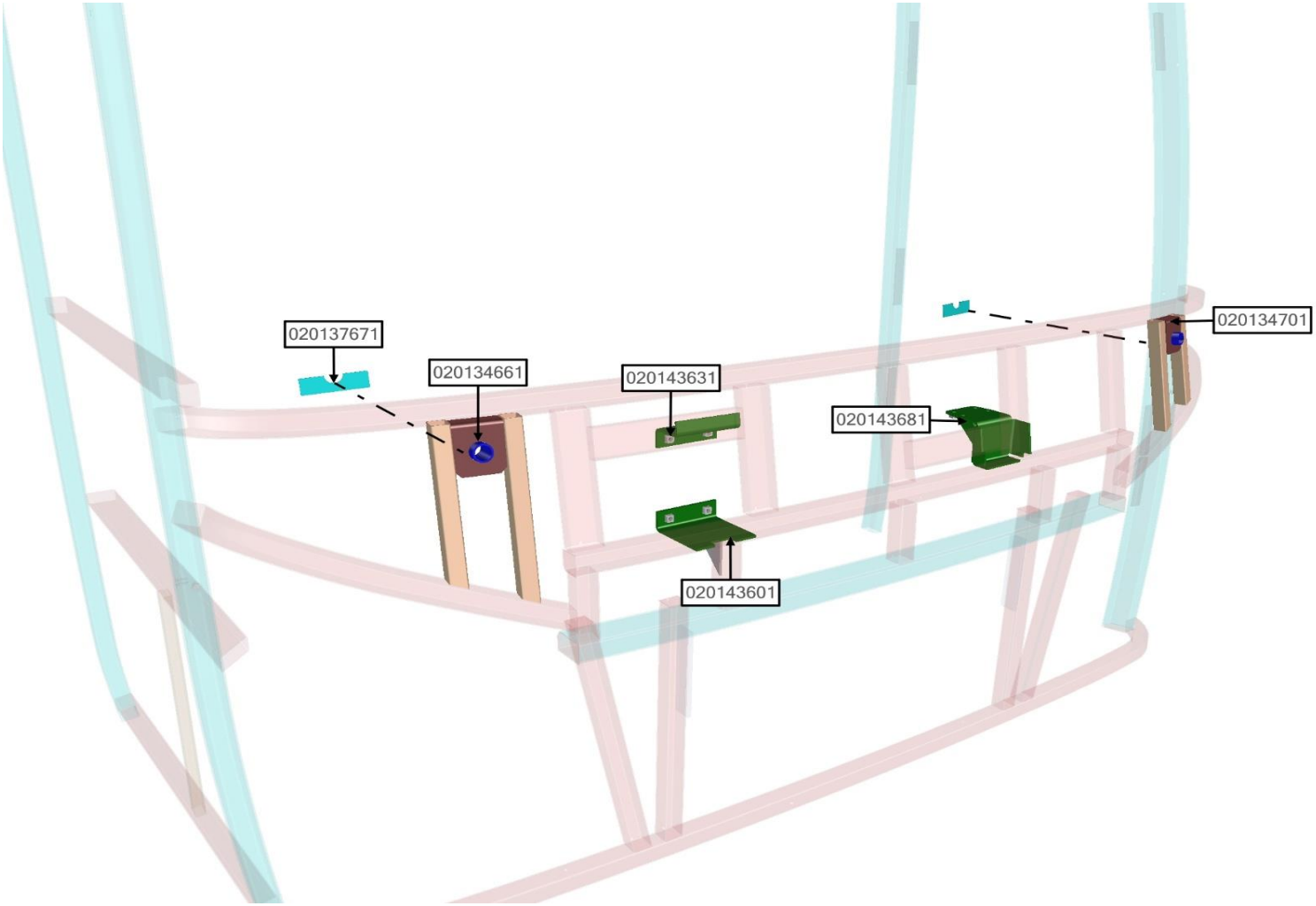


| ASSB_NAME | PART NO. | NAME | QTY |
|---|---|---|---|
| WINDSCREEN WIPER CONNECTING ITEM | 020134661 | WINDSCREEN WIPER BRACKET LH 01 | 1 |
| | 020134701 | WINDSCREEN WIPER BRACKET RH 01 | 1 |
| | 020137671 | WINDSCREEN WIPER BRACKET 02 | 2 |
| | 020143601 | BRACKET 01 | 1 |
| | 020143631 | BRACKET 02 | 1 |
| | 020143681 | WINDSCREEN WIPER BRACKET 05 | 1 |
| | | | |

| ASSB_NAME | PART NO. | NAME | QTY |
|---|---|---|---|
| WINDSCREEN WIPER CONNECTING ITEM | | | |
| | | | |
| | | | |
| | | | |
| | | | |
| | | | |
| | | | |

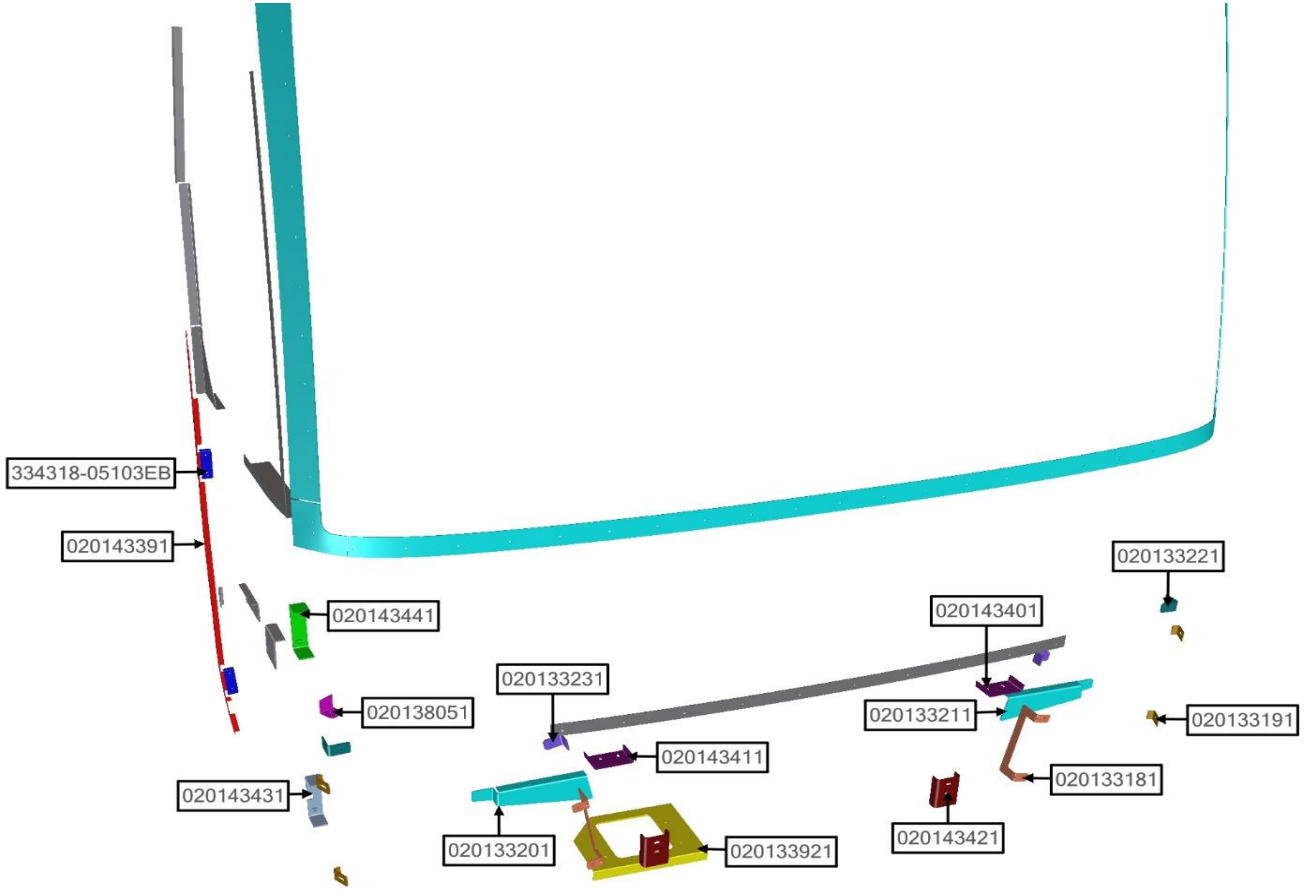


| ASSB_NAME | PART NO | NAME | QTY |
|---|---|---|---|
| EXTERIOR CONNECTING ITEM | 334318-05103EB | BRACKET | 2 |
| | 020133181 | BRACKET | 2 |
| | 020133191 | BRACKET | 4 |
| | 020133201 | BRACKET | 1 |
| | 020133211 | BRACKET | 1 |
| | 020133221 | BRACKET | 2 |
| | 020133231 | BRACKET | 2 |
| | 020133921 | BRACKET | 1 |

| ASSB_NAME | PART NO. | NAME | QTY |
|---|---|---|---|
| EXTERIOR CONNECTING ITEM | 020138051 | BRACKET | 1 |
| | 020143391 | MOULDING | 1 |
| | 020143401 | BRACKET | 1 |
| | 020143411 | BRACKET | 1 |
| | 020143421 | BRACKET | 2 |
| | 020143431 | BRACKET | 1 |
| | 020143441 | BRACKET | 1 |
| | | | |

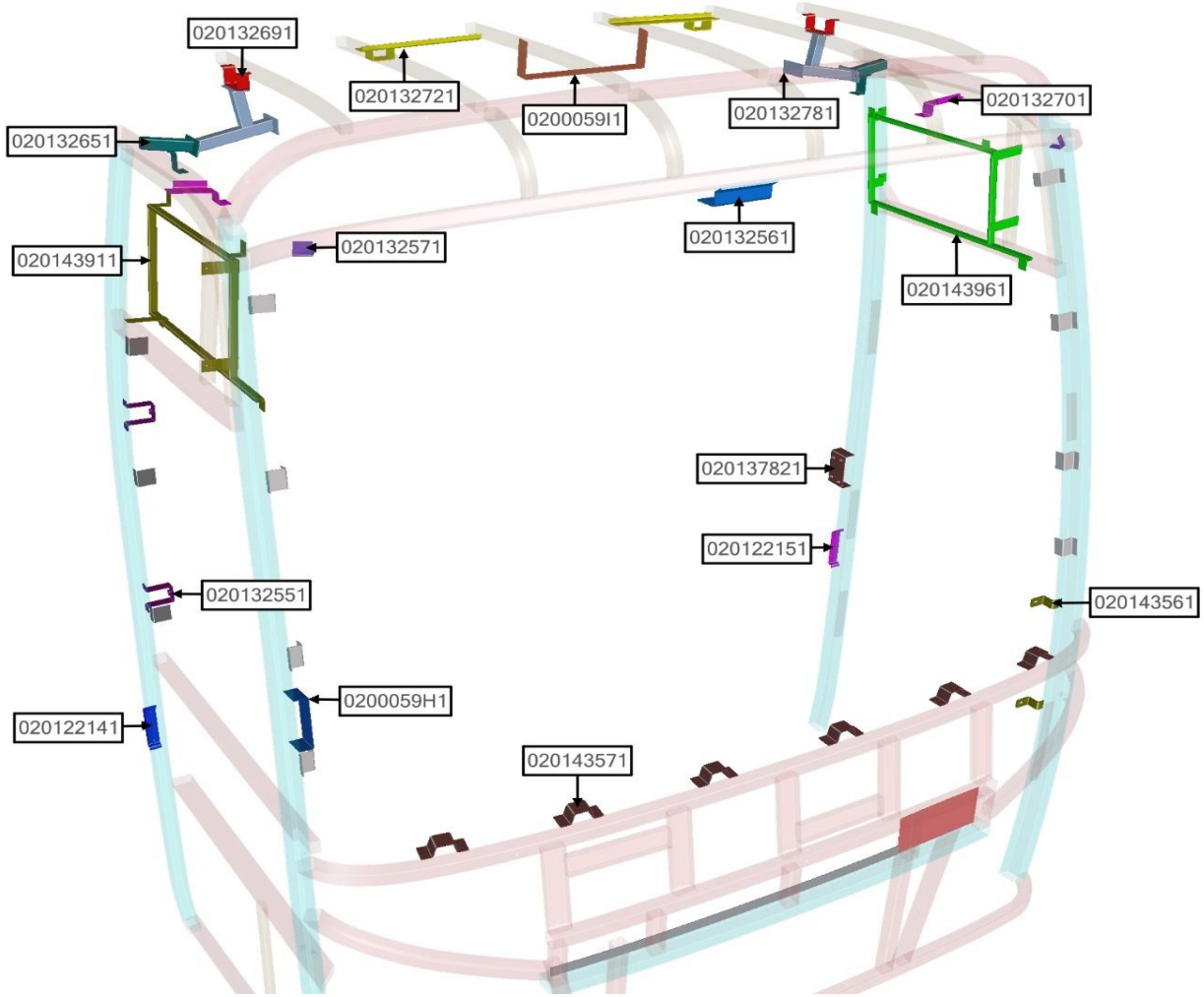


| ASSB_NAME | PART NO. | NAME | QTY |
|---|---|---|---|
| INTERIOR CONNECTING ITEM | 0200059H1 | BRACKET | 1 |
| | 0200059I1 | BRACKET | 1 |
| | 020122141 | MOUNTING | 1 |
| | 020122151 | MOUNTING | 1 |
| | 020132551 | BRACKET | 2 |
| | 020132561 | BRACKET | 1 |
| | 020132571 | BRACKET | 2 |

| ASSB_NAME | PART NO. | NAME | QTY |
|---|---|---|---|
| INTERIOR CONNECTING ITEM | 020132651 | BRACKET | 2 |
| | 020132691 | BRACKET | 2 |
| | 020132701 | BRACKET | 2 |
| | 020132721 | BRACKET | 2 |
| | 020132781 | BRACKET | 2 |
| | 020137821 | BRACKET | 1 |
| | 020143561 | BRACKET | 2 |

| ASSB_NAME | PART NO. | NAME | QTY |
|---|---|---|---|
| INTERIOR CONNECTING ITEM | 020143571 | BRACKET | 6 |
| | 020143911 | BRACKET | 1 |
| | 020143961 | BRACKET | 1 |

| ASSB_NAME | PART NO. | NAME | QTY |
|---|---|---|---|
| INTERIOR CONNECTING ITEM | | | |

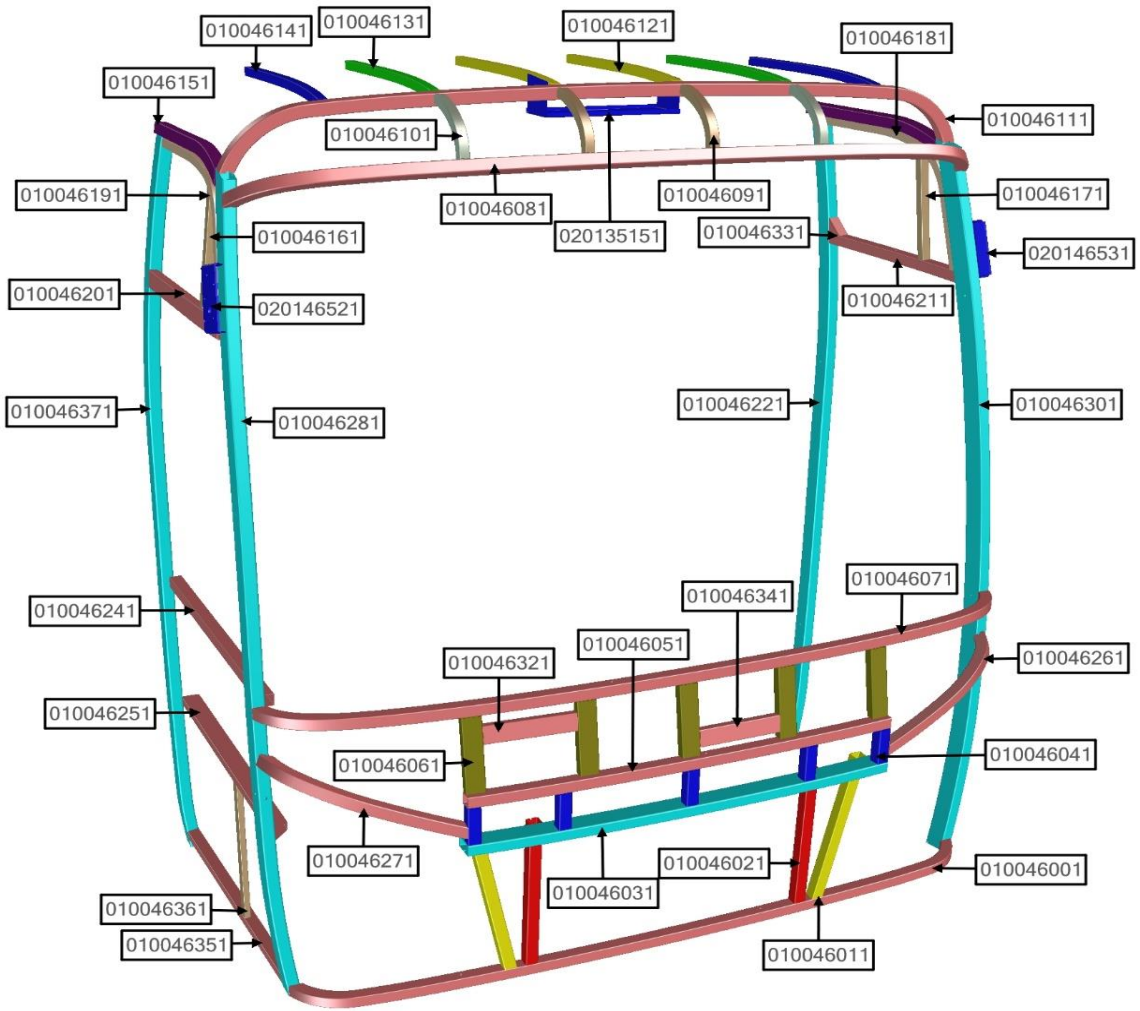


| ASSB_NAME | PART NO. | NAME | QTY |
|---|---|---|---|
| FRONT FRAME | 010046001 | SQUARE PIPE 01 | 1 |
| | 010046011 | SQUARE PIPE 02 | 2 |
| | 010046021 | SQUARE PIPE 03 | 2 |
| | 010046031 | SQUARE PIPE 04 | 1 |
| | 010046041 | SQUARE PIPE 05 | 5 |
| | 010046051 | SQUARE PIPE 06 | 1 |
| | 010046061 | SQUARE PIPE 07 | 5 |

| ASSB_NAME | PART NO. | NAME | QTY |
|---|---|---|---|
| FRONT FRAME | 010046071 | SQUARE PIPE 08 | 1 |
| | 010046081 | SQUARE PIPE 09 | 1 |
| | 010046091 | SQUARE PIPE 10 | 2 |
| | 010046101 | SQUARE PIPE 11 | 2 |
| | 010046111 | SQUARE PIPE 12 | 1 |
| | 010046121 | SQUARE PIPE 13 | 2 |
| | 010046131 | SQUARE PIPE 14 | 2 |

| ASSB_NAME | PART NO. | NAME | QTY |
|---|---|---|---|
| FRONT FRAME | 010046141 | SQUARE PIPE 15 | 2 |
| | 010046151 | SQUARE PIPE 16 | 2 |
| | 010046161 | SQUARE PIPE 17 | 1 |
| | 010046171 | SQUARE PIPE 18 | 1 |
| | 010046181 | SQUARE PIPE 19 | 1 |
| | 010046191 | SQUARE PIPE 20 | 1 |
| | 010046201 | SQUARE PIPE 21 | 1 |
| | 010046211 | SQUARE PIPE 22 | 1 |
| | 010046221 | SQUARE PIPE 23 | 1 |
| | 010046241 | SQUARE PIPE 24 | 1 |
| | 010046251 | SQUARE PIPE 25 | 1 |
| | 010046261 | SQUARE PIPE 26 | 1 |
| | 010046271 | SQUARE PIPE 27 | 1 |
| | 010046281 | SQUARE PIPE 28 | 1 |
| | 010046301 | SQUARE PIPE 29 | 1 |
| | 010046321 | SQUARE PIPE 30 | 1 |
| | 010046331 | SQUARE PIPE 31 | 1 |
| | 010046341 | SQUARE PIPE 32 | 1 |
| | 010046351 | SQUARE PIPE 33 | 1 |
| | 010046361 | SQUARE PIPE 34 | 1 |
| | 010046371 | SQUARE PIPE 35 | 1 |
| | 020135151 | BRACKET | 1 |
| | 020146521 | BRACKET | 1 |
| | 020146531 | BRACKET | 1 |
| | | | |
| | | | |
| | | | |
| | | | |
| | | | |
| | | | |
| | | | |
| | | | |
| | | | |
| | | | |

| ASSB_NAME | PART NO. | NAME | QTY |
|---|---|---|---|
| FRONT FRAME | | | |
| | | | |
| | | | |
| | | | |
| | | | |
| | | | |
| | | | |
| | | | |
| | | | |
| | | | |
| | | | |
| | | | |
| | | | |
| | | | |
| | | | |
| | | | |
| | | | |
| | | | |
| | | | |
| | | | |
| | | | |
| | | | |
| | | | |
| | | | |
| | | | |
| | | | |
| | | | |
| | | | |
| | | | |
| | | | |
| | | | |

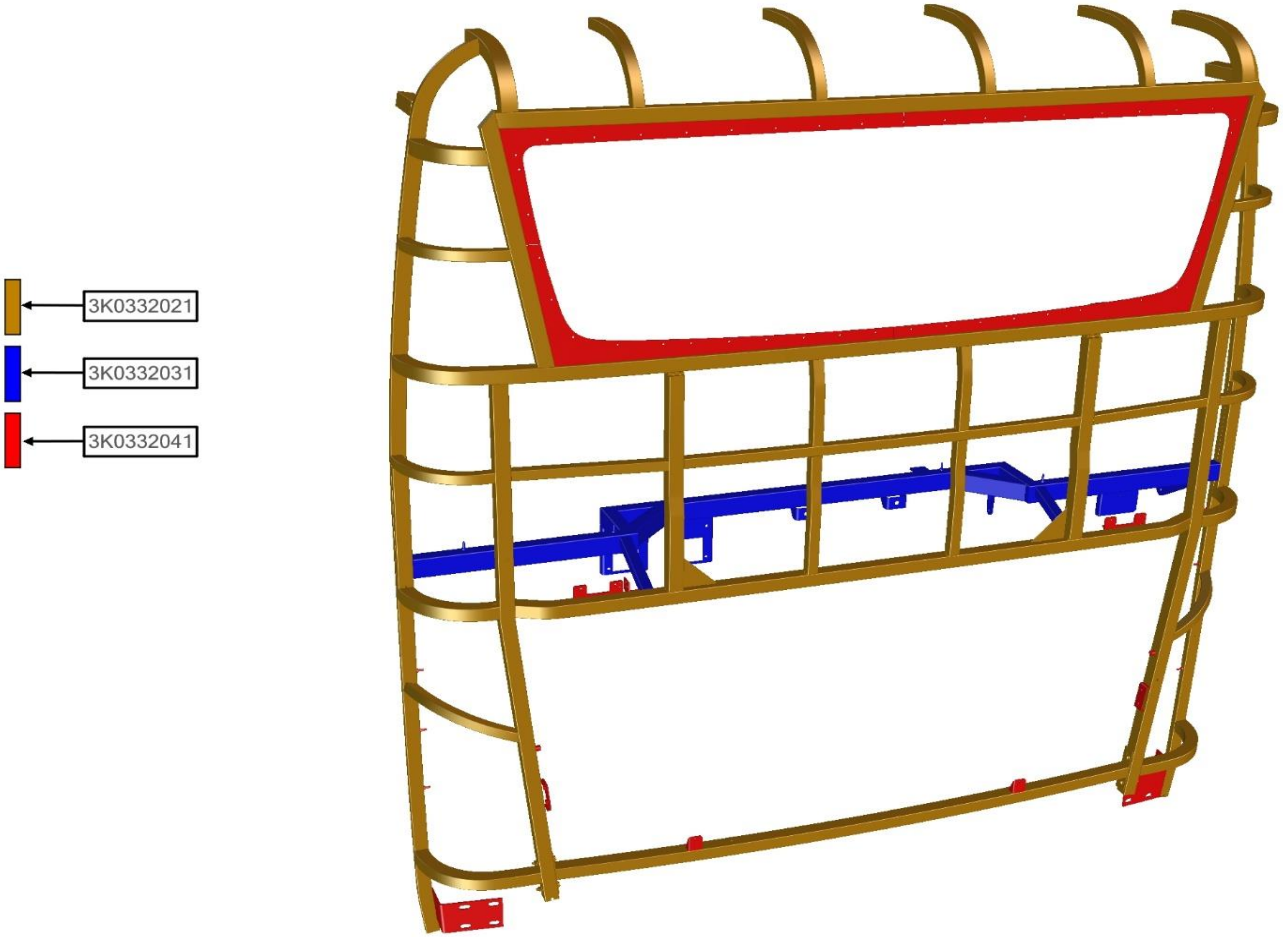


| ASSB_NAME | PART NO. | NAME | QTY |
|---|---|---|---|
| REAR FRAME - ASSY | 3K0332031 | EXPANDING WATER TANK SQUARE PIPE | 1 |
| | 3K0332041 | CONNECTING ITEM | 1 |
| | 3K0332021 | REAR FRAME | 1 |
| | | | |
| | | | |
| | | | |
| | | | |
| | | | |

| ASSB_NAME | PART NO. | NAME | QTY |
|---|---|---|---|
| REAR FRAME - ASSY | | | |
| | | | |
| | | | |
| | | | |
| | | | |
| | | | |
| | | | |
| | | | |

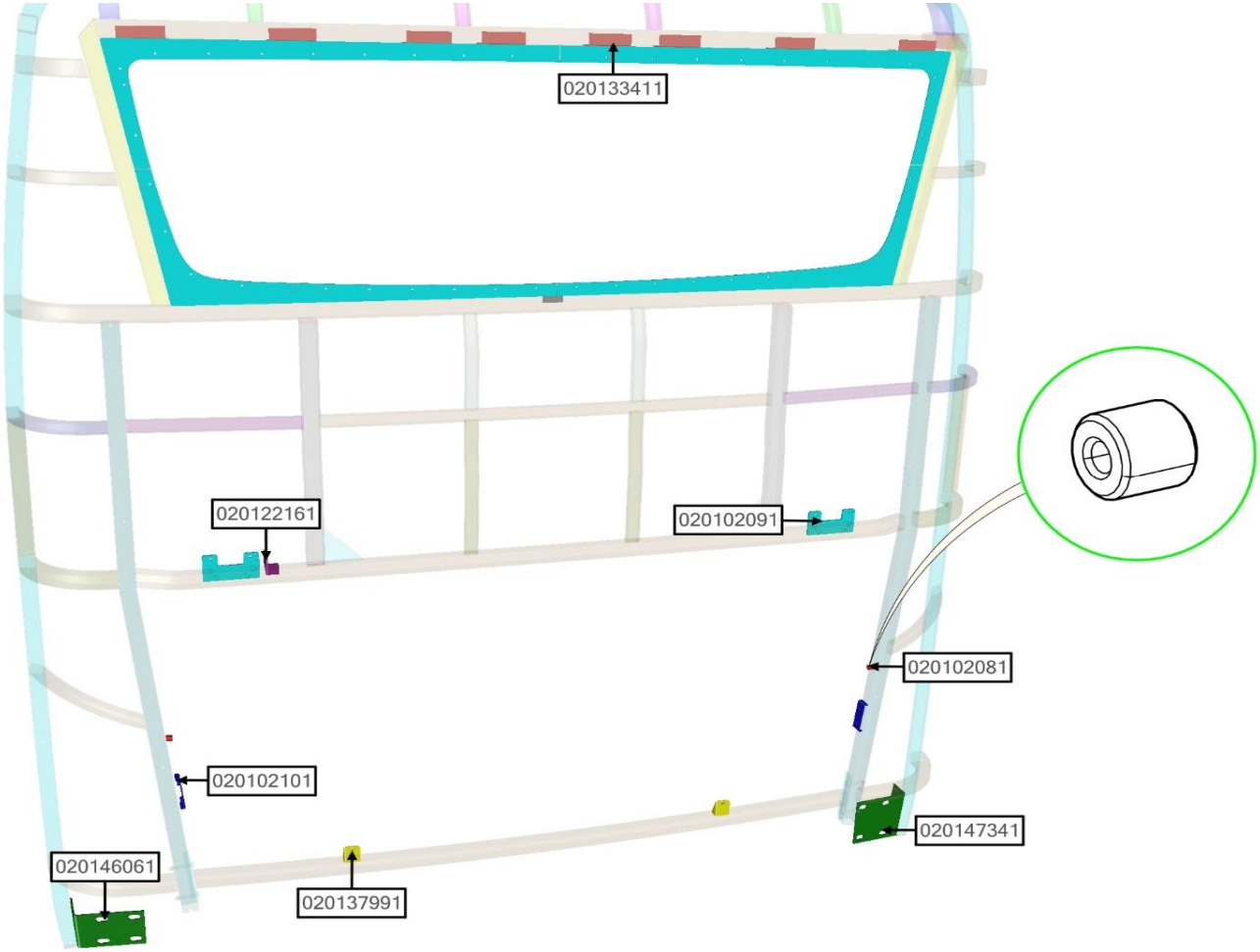


| ASSB_NAME | PART NO. | NAME | QTY |
|---|---|---|---|
| CONNECTING ITEM | 020102081 | BRACKET | 2 |
| | 020102091 | BRACKET | 2 |
| | 020102101 | BRACKET | 2 |
| | 020122161 | BRACKET | 1 |
| | 020133391 | BRACKET | 8 |
| | 020137991 | BRACKET | 2 |
| | 020146061 | BRACKET | 1 |
| | 020147341 | BRACKET | 1 |

| ASSB_NAME | PART NO. | NAME | QTY |
|---|---|---|---|
| CONNECTING ITEM | | | |
| | | | |
| | | | |
| | | | |
| | | | |
| | | | |
| | | | |
| | | | |

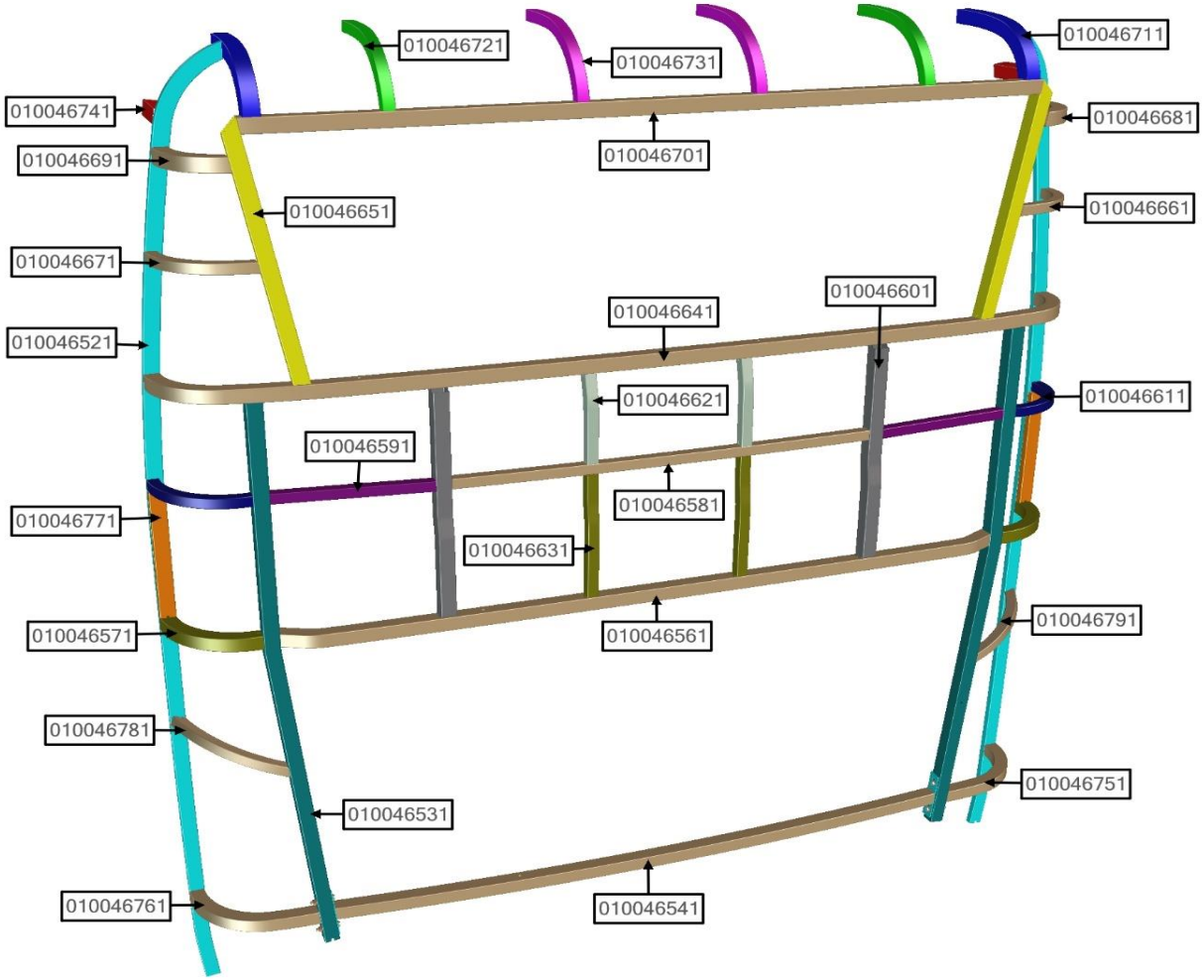


| ASSB_NAME | PART NO. | NAME | QTY |
|---|---|---|---|
| REAR FRAME | 010046521 | SQUARE PIPE 01 | 2 |
| | 010046531 | SQUARE PIPE 02 | 2 |
| | 010046541 | SQUARE PIPE 03 | 1 |
| | 010046561 | SQUARE PIPE 04 | 1 |
| | 010046571 | SQUARE PIPE 05 | 2 |
| | 010046581 | SQUARE PIPE 06 | 1 |
| | 010046591 | SQUARE PIPE 07 | 2 |

| ASSB_NAME | PART NO. | NAME | QTY |
|---|---|---|---|
| REAR FRAME | 010046601 | SQUARE PIPE 08 | 2 |
| | 010046611 | SQUARE PIPE 09 | 2 |
| | 010046621 | SQUARE PIPE 10 | 2 |
| | 010046631 | SQUARE PIPE 11 | 2 |
| | 010046641 | SQUARE PIPE 12 | 1 |
| | 010046651 | SQUARE PIPE 13 | 2 |
| | 010046661 | SQUARE PIPE 14 | 1 |

| ASSB_NAME | PART NO. | NAME | QTY |
|---|---|---|---|
| REAR FRAME | 010046671 | XƯƠNG ĐUÔI 15 | 1 |
| | 010046681 | XƯƠNG ĐUÔI 16 | 1 |
| | 010046691 | XƯƠNG ĐUÔI 17 | 1 |
| | 010046701 | XƯƠNG ĐUÔI 18 | 1 |
| | 010046711 | XƯƠNG ĐUÔI 19 | 2 |
| | 010046721 | XƯƠNG ĐUÔI 20 | 2 |
| | 010046731 | XƯƠNG ĐUÔI 21 | 2 |
| | 010046741 | XƯƠNG ĐUÔI 22 | 2 |
| | 010046751 | XƯƠNG ĐUÔI 23 | 1 |
| | 010046761 | XƯƠNG ĐUÔI 24 | 1 |
| | 010046771 | XƯƠNG ĐUÔI 25 | 2 |
| | 010046781 | XƯƠNG ĐUÔI 26 | 1 |
| | 010046791 | XƯƠNG ĐUÔI 27 | 1 |

| ASSB_NAME | PART NO. | NAME | QTY |
|---|---|---|---|
| REAR FRAME | | | |

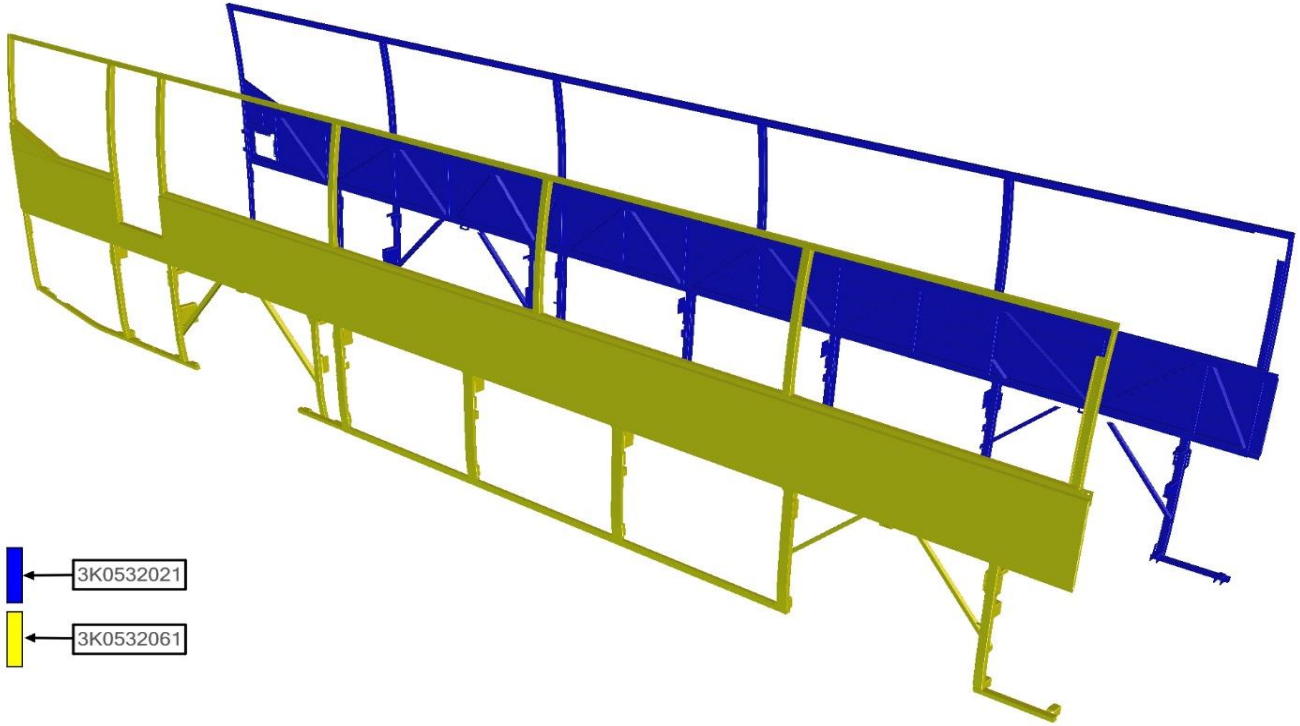


| ASSB_NAME | PART NO. | NAME | QTY |
|---|---|---|---|
| SIDE FRAME - ASSY | 3K0532061 | RH SIDE FRAME - ASSY | 1 |
| | 3K0532021 | LH SIDE FRAME - ASSY | 1 |
| | | | |
| | | | |
| | | | |
| | | | |
| | | | |

| ASSB_NAME | PART NO. | NAME | QTY |
|---|---|---|---|
| SIDE FRAME - ASSY | | | |
| | | | |
| | | | |
| | | | |
| | | | |
| | | | |
| | | | |

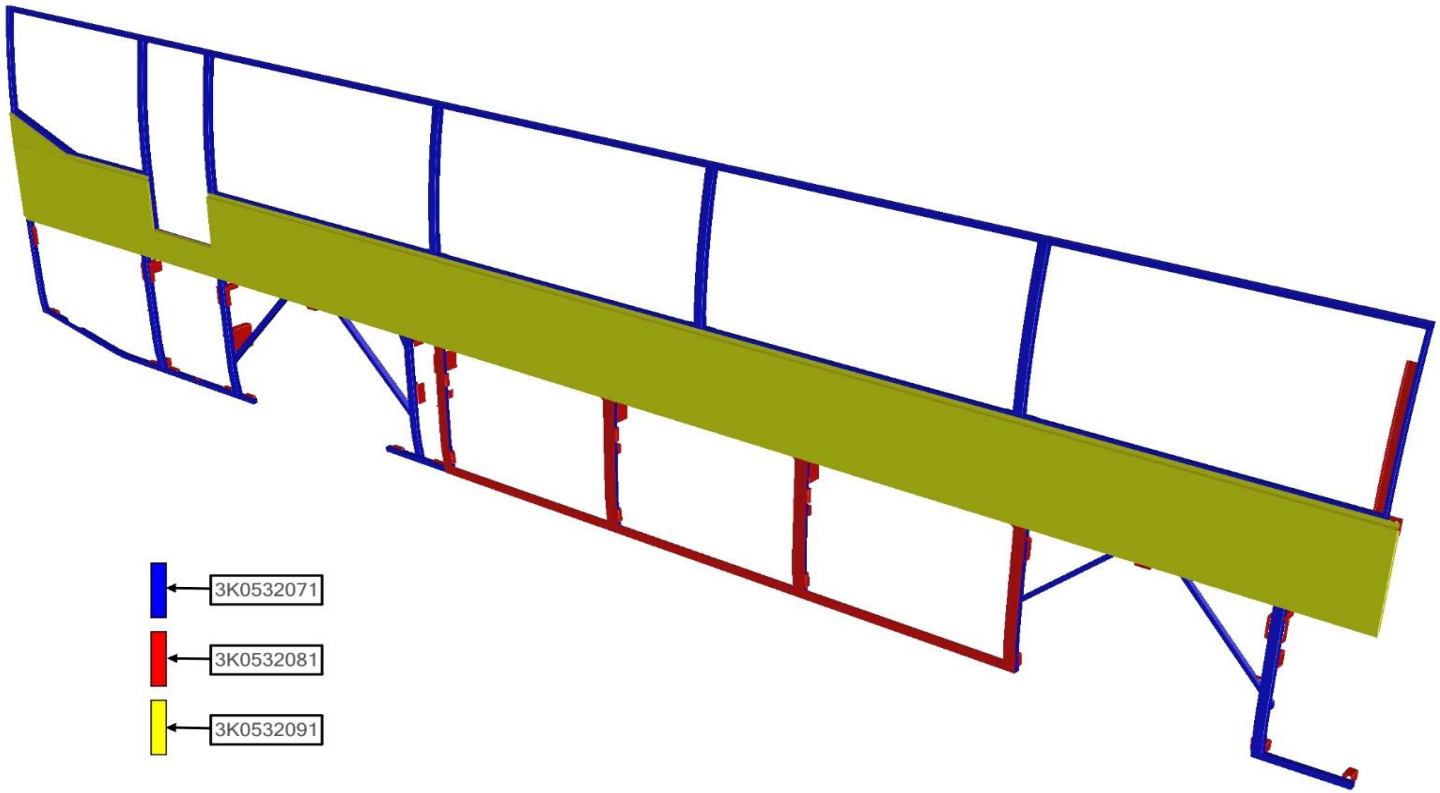


| ASSB_NAME | PART NO. | NAME | QTY |
|---|---|---|---|
| RH SIDE FRAME - ASSY | 3K0532081 | CONNECTING ITEM | 1 |
| | 3K0532091 | STEEL SHEET | 1 |
| | 3K0532071 | BODY SIDE RH | 1 |
| | | | |
| | | | |
| | | | |
| | | | |

| ASSB_NAME | PART NO. | NAME | QTY |
|---|---|---|---|
| RH SIDE FRAME - ASSY | | | |
| | | | |
| | | | |
| | | | |
| | | | |
| | | | |
| | | | |

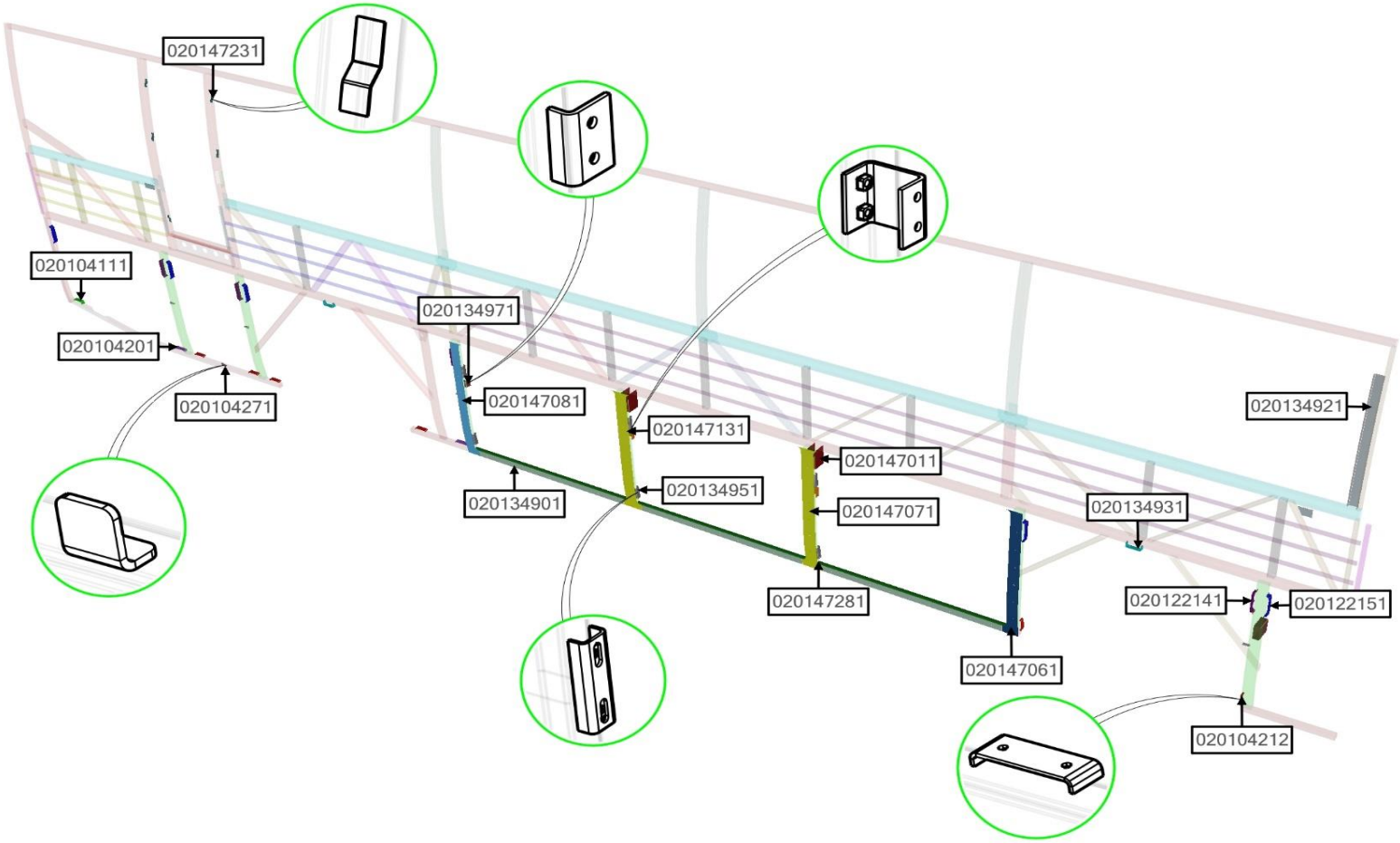


| ASSB_NAME | PART NO. | NAME | QTY |
|---|---|---|---|
| CONNECTING ITEM | 020104111 | BRACKET | 1 |
| | 020104201 | BRACKET | 2 |
| | 020104212 | BRACKET | 6 |
| | 020104271 | BRACKET | 1 |
| | 020122141 | MOUNTING | 4 |
| | 020122151 | MOUNTING | 5 |
| | 020134901 | MOULDING | 3 |

| ASSB_NAME | PART NO. | NAME | QTY |
|---|---|---|---|
| CONNECTING ITEM | 020134921 | BRACKET | 1 |
| | 020134931 | BRACKET | 2 |
| | 020134951 | BRACKET | 10 |
| | 020134971 | BRACKET | 2 |
| | 020147011 | BRACKET | 2 |
| | 020147061 | MOULDING | 1 |
| | 020147071 | MOULDING | 2 |

| ASSB_NAME | PART NO. | NAME | QTY |
|---|---|---|---|
| CONNECTING ITEM | 020147081 | MOULDING | 1 |
| | 020147131 | BRACKET | 2 |
| | 020147231 | BRACKET | 5 |
| | 020147281 | BRACKET | 3 |

| ASSB_NAME | PART NO. | NAME | QTY |
|---|---|---|---|
| CONNECTING ITEM | | | |

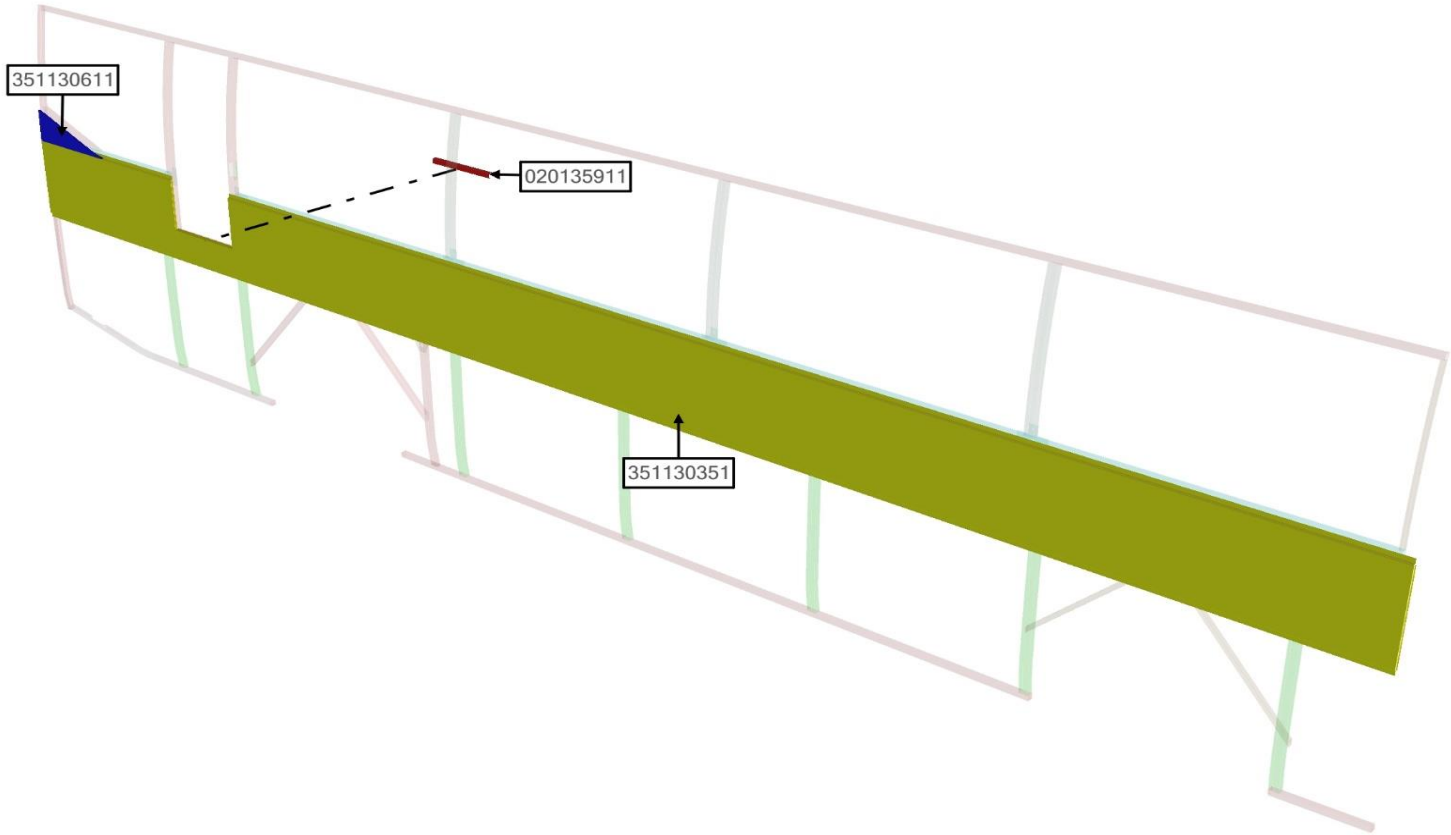


| ASSB_NAME | PART NO. | NAME | QTY |
|---|---|---|---|
| STEEL SHEET | 20135911 | BRACKET | 1 |
| | 351130351 | RH SIDE STEEL SHEET - ASSY | 1 |
| | 351130611 | RH STEEL SHEET | 1 |
| | | | |
| | | | |
| | | | |
| | | | |

| ASSB_NAME | PART NO. | NAME | QTY |
|---|---|---|---|
| STEEL SHEET | | | |
| | | | |
| | | | |
| | | | |
| | | | |
| | | | |
| | | | |

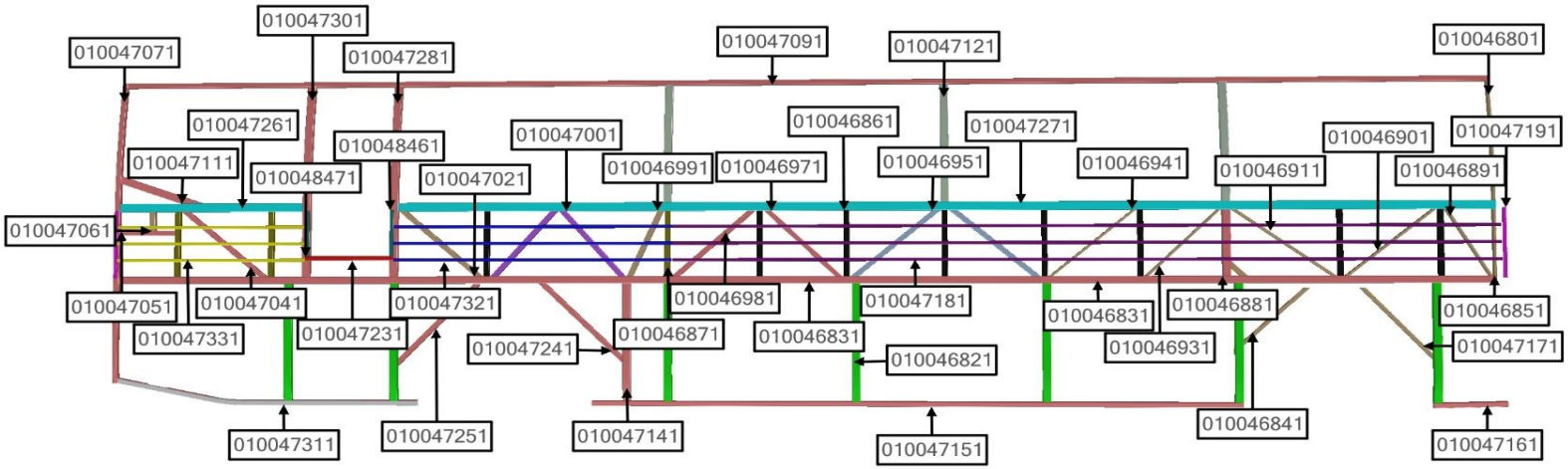


| ASSB_NAME | PART NO. | NAME | QTY |
|---|---|---|---|
| BODY SIDE RH | 010046801 | SQUARE PIPE 01 | 1 |
| | 010046821 | SQUARE PIPE 03 | 7 |
| | 010046831 | SQUARE PIPE 04 | 1 |
| | 010046841 | SQUARE PIPE 05 | 1 |
| | 010046851 | SQUARE PIPE 06 | 1 |
| | 010046861 | SQUARE PIPE 07 | 8 |
| | 010046871 | SQUARE PIPE 08 | 3 |

| ASSB_NAME | PART NO. | NAME | QTY |
|---|---|---|---|
| BODY SIDE RH | 010046881 | SQUARE PIPE 09 | 1 |
| | 010046891 | SQUARE PIPE 10 | 1 |
| | 010046901 | SQUARE PIPE 11 | 1 |
| | 010046911 | SQUARE PIPE 12 | 1 |
| | 010046931 | SQUARE PIPE 14 | 1 |
| | 010046941 | SQUARE PIPE 15 | 1 |
| | 010046951 | SQUARE PIPE 16 | 2 |

| ASSB_NAME | PART NO. | NAME | QTY |
|---|---|---|---|
| BODY SIDE RH | 010046971 | SQUARE PIPE 18 | 1 |
| | 010046981 | SQUARE PIPE 19 | 1 |
| | 010046991 | SQUARE PIPE 20 | 1 |
| | 010047001 | SQUARE PIPE 21 | 2 |
| | 010047021 | SQUARE PIPE 23 | 1 |
| | 010047041 | SQUARE PIPE 25 | 1 |
| | 010047051 | SQUARE PIPE 26 | 1 |
| | 010047061 | SQUARE PIPE 27 | 1 |
| | 010047071 | SQUARE PIPE 28 | 1 |
| | 010047091 | SQUARE PIPE 29 | 1 |
| | 010047111 | SQUARE PIPE 31 | 1 |
| | 010047121 | SQUARE PIPE 32 | 3 |
| | 010047141 | SQUARE PIPE 34 | 1 |
| | 010047151 | SQUARE PIPE 35 | 1 |
| | 010047161 | SQUARE PIPE 36 | 1 |
| | 010047171 | SQUARE PIPE 37 | 1 |
| | 010047181 | SQUARE PIPE 01 | 3 |
| | 010047191 | SQUARE PIPE 02 | 2 |
| | 010047231 | SQUARE PIPE 38 | 1 |
| | 010047241 | SQUARE PIPE 39 | 1 |
| | 010047251 | SQUARE PIPE 40 | 1 |
| | 010047261 | SQUARE PIPE 41 | 1 |
| | 010047271 | SQUARE PIPE 42 | 1 |
| | 010047281 | SQUARE PIPE 43 | 1 |
| | 010047301 | SQUARE PIPE 44 | 1 |
| | 010047311 | SQUARE PIPE 45 | 1 |
| | 010047321 | SQUARE PIPE 07 | 3 |
| | 010047331 | SQUARE PIPE 08 | 3 |
| | 010048461 | SQUARE PIPE 05 | 2 |
| | 010048471 | SQUARE PIPE 06 | 1 |
| | | | |
| | | | |
| | | | |
| | | | |

| ASSB_NAME | PART NO. | NAME | QTY |
|---|---|---|---|
| BODY SIDE RH | | | |
| | | | |
| | | | |
|

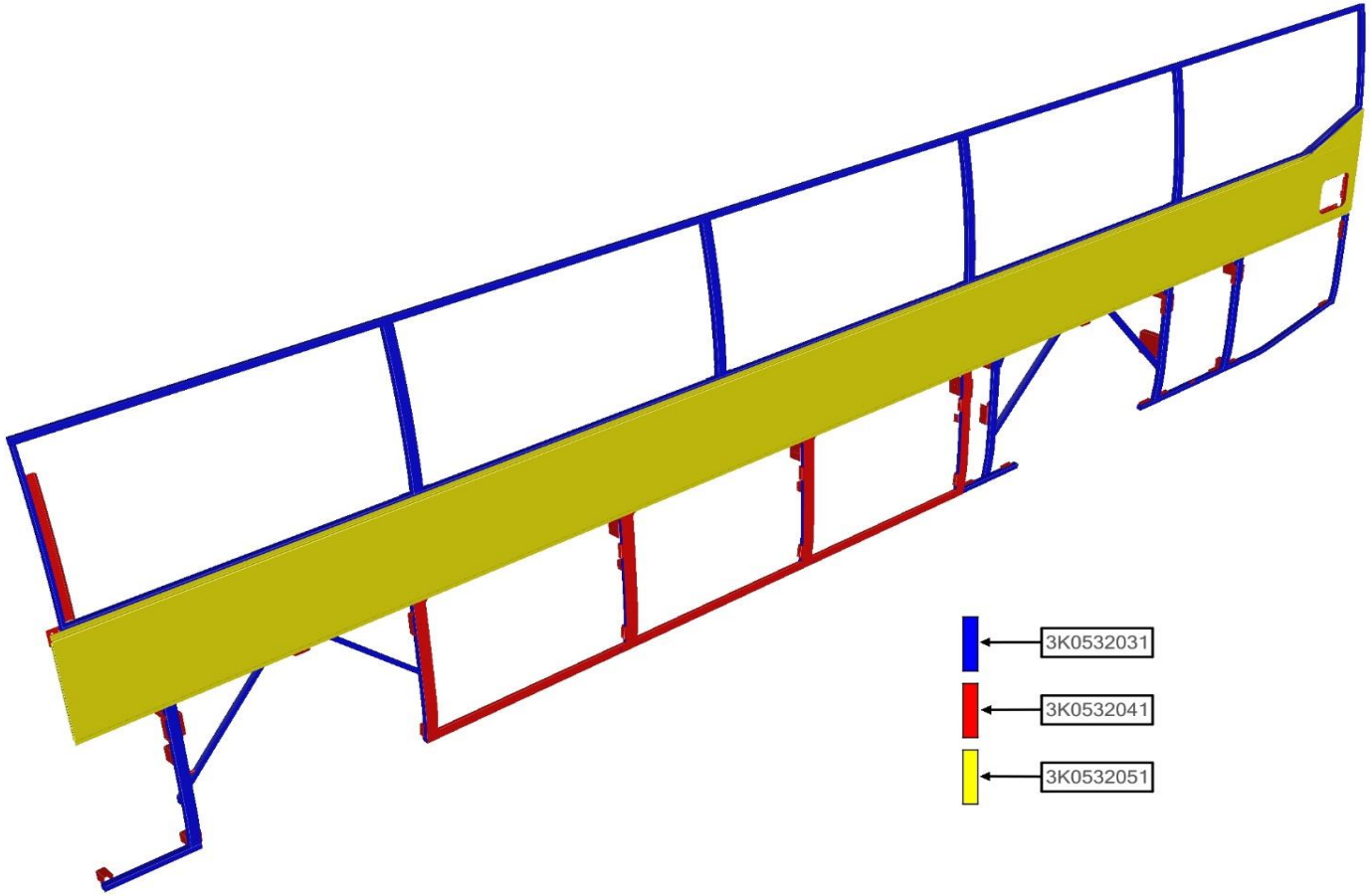


| ASSB_NAME | PART NO. | NAME | QTY |
|---|---|---|---|
| LH SIDE FRAME - ASSY | 3K0532041 | CONNECTING ITEM | 1 |
| | 3K0532051 | STEEL SHEET | 1 |
| | 3K0532031 | BODY SIDE LH | 1 |
| | | | |
| | | | |
| | | | |
| | | | |

| ASSB_NAME | PART NO. | NAME | QTY |
|---|---|---|---|
| LH SIDE FRAME - ASSY | | | |
| | | | |
| | | | |
| | | | |
| | | | |
| | | | |
| | | | |

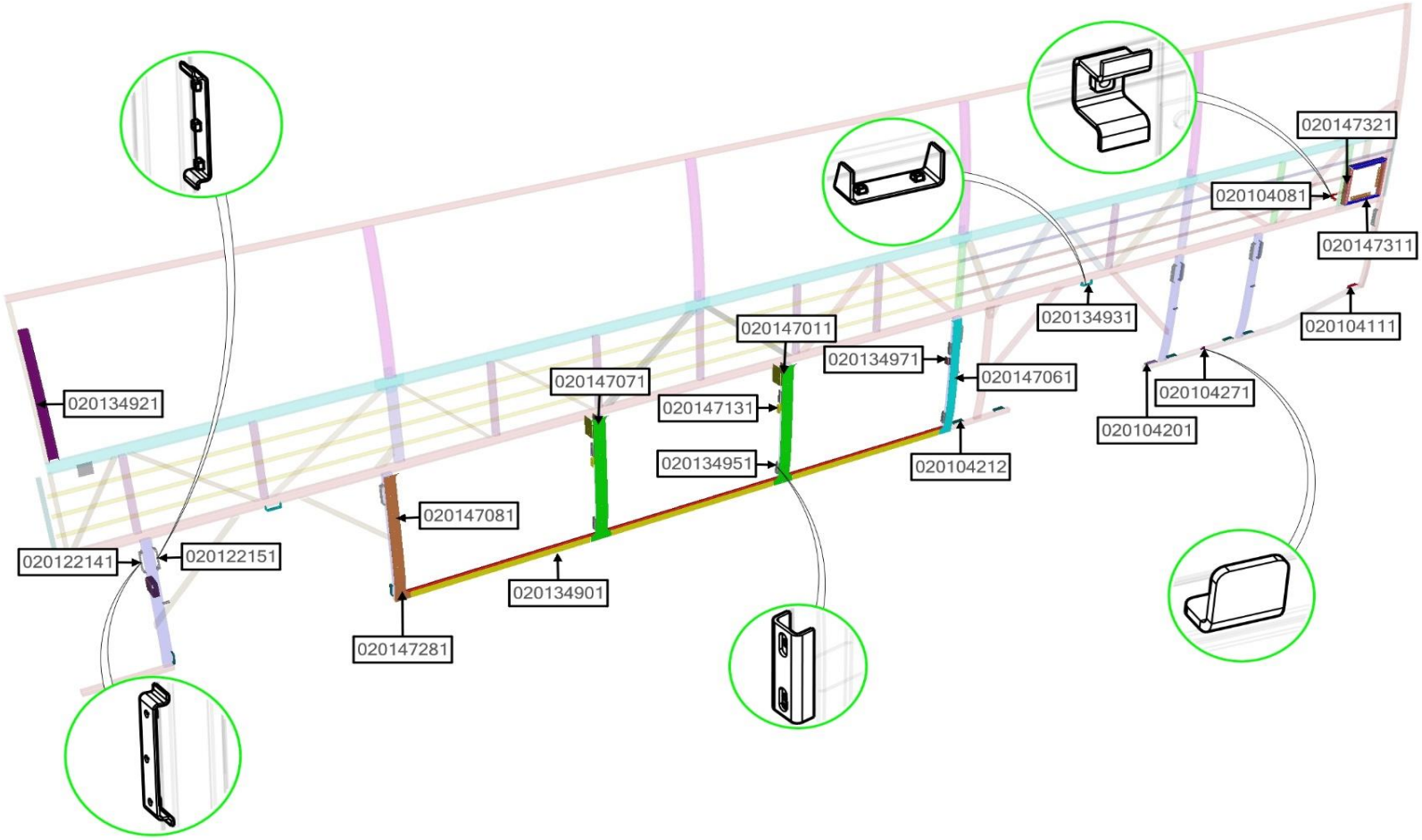


| ASSB_NAME | PART NO. | NAME | QTY |
|---|---|---|---|
| CONNECTING ITEM | 020104081 | BRACKET | 3 |
| | 020104111 | BRACKET | 1 |
| | 020104201 | BRACKET | 1 |
| | 020104212 | BRACKET | 7 |
| | 020104271 | BRACKET | 1 |
| | 020122141 | LH MOUNTING | 5 |
| | 020122151 | RH MOUNTING | 4 |

| ASSB_NAME | PART NO. | NAME | QTY |
|---|---|---|---|
| CONNECTING ITEM | 020134901 | MOULDING | 3 |
| | 020134921 | BRACKET | 1 |
| | 020134931 | BRACKET | 2 |
| | 020134951 | BRACKET | 11 |
| | 020134971 | BRACKET | 2 |
| | 020147011 | BRACKET | 2 |
| | 020147061 | MOULDING 01 | 1 |

| ASSB_NAME | PART NO. | NAME | QTY |
|---|---|---|---|
| CONNECTING ITEM | 020147071 | MOULDING 02 | 2 |
| | 020147081 | MOULDING 03 | 1 |
| | 020147131 | BRACKET | 2 |
| | 020147281 | BRACKET | 3 |
| | 020147311 | BRACKET | 2 |
| | 020147321 | BRACKET | 2 |

| ASSB_NAME | PART NO. | NAME | QTY |
|---|---|---|---|
| CONNECTING ITEM | | | |

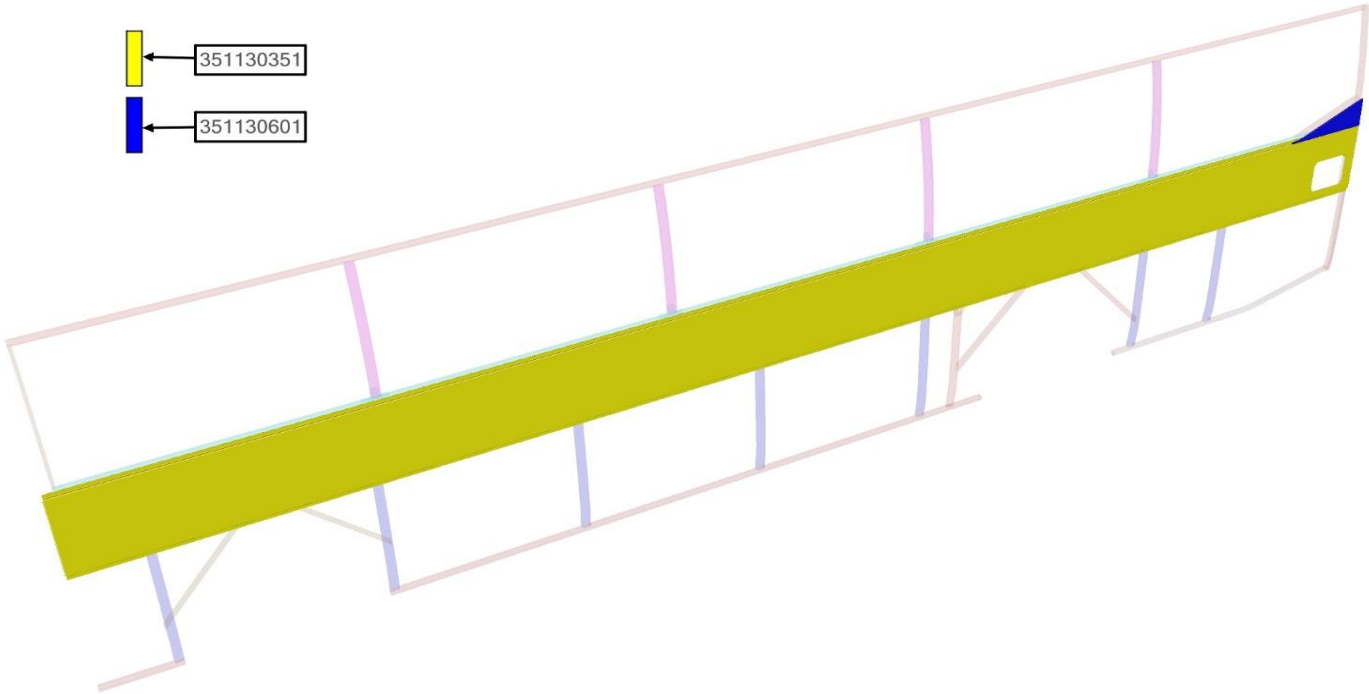


| ASSB_NAME | PART NO. | NAME | QTY |
|---|---|---|---|
| STEEL SHEET | 351130351 | LH SIDE STEEL SHEET - ASSY | 1 |
| | 351130601 | LH STEEL SHEET | 1 |
| | | | |
| | | | |
| | | | |
| | | | |
| | | | |

| ASSB_NAME | PART NO. | NAME | QTY |
|---|---|---|---|
| STEEL SHEET | | | |
| | | | |
| | | | |
| | | | |
| | | | |
| | | | |
| | | | |

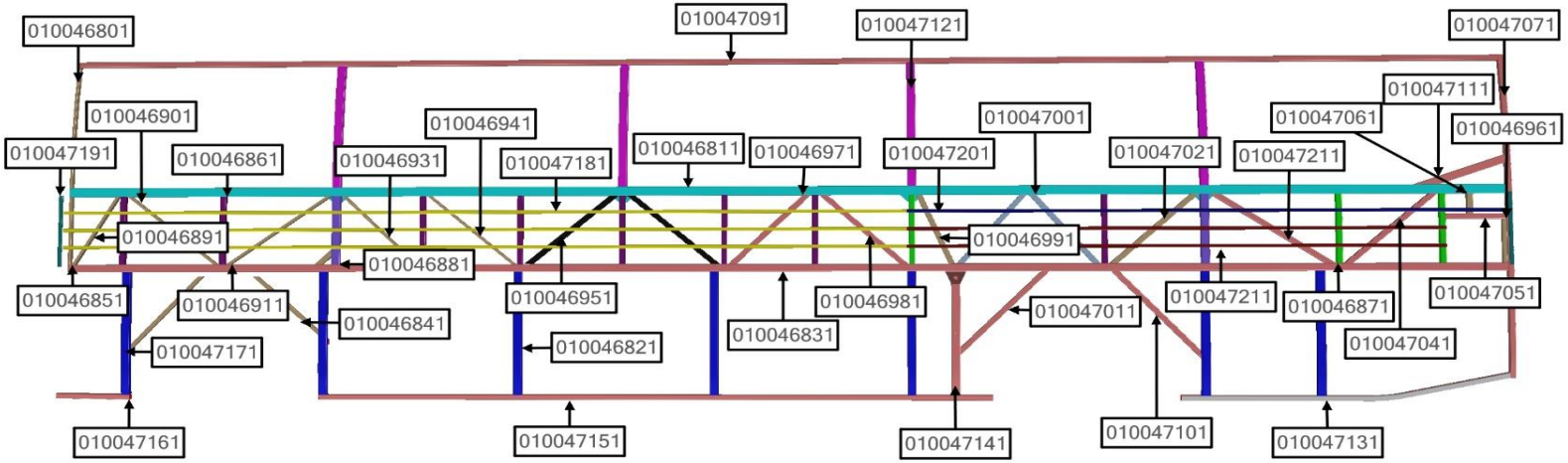


| ASSB_NAME | PART NO. | NAME | QTY |
|---|---|---|---|
| BODY SIDE LH | 010046801 | SQUARE PIPE 01 | 1 |
| | 010046811 | SQUARE PIPE 02 | 1 |
| | 010046821 | SQUARE PIPE 03 | 7 |
| | 010046831 | SQUARE PIPE 04 | 1 |
| | 010046841 | SQUARE PIPE 05 | 1 |
| | 010046851 | SQUARE PIPE 06 | 1 |
| | 010046861 | SQUARE PIPE 07 | 8 |

| ASSB_NAME | PART NO. | NAME | QTY |
|---|---|---|---|
| BODY SIDE LH | 010046871 | SQUARE PIPE 08 | 3 |
| | 010046881 | SQUARE PIPE 09 | 2 |
| | 010046891 | SQUARE PIPE 10 | 1 |
| | 010046901 | SQUARE PIPE 11 | 1 |
| | 010046911 | SQUARE PIPE 12 | 1 |
| | 010046931 | SQUARE PIPE 14 | 1 |
| | 010046941 | SQUARE PIPE 15 | 1 |

| ASSB_NAME | PART NO. | NAME | QTY |
|---|---|---|---|
| BODY SIDE LH | 010046951 | SQUARE PIPE 16 | 2 |
| | 010046961 | SQUARE PIPE 17 | 1 |
| | 010046971 | SQUARE PIPE 18 | 1 |
| | 010046981 | SQUARE PIPE 19 | 1 |
| | 010046991 | SQUARE PIPE 20 | 1 |
| | 010047001 | SQUARE PIPE 21 | 2 |
| | 010047011 | SQUARE PIPE 22 | 1 |
| | 010047021 | SQUARE PIPE 23 | 1 |
| | 010047031 | SQUARE PIPE 24 | 1 |
| | 010047041 | SQUARE PIPE 25 | 1 |
| | 010047051 | SQUARE PIPE 26 | 1 |
| | 010047061 | SQUARE PIPE 27 | 1 |
| | 010047071 | SQUARE PIPE 28 | 1 |
| | 010047091 | SQUARE PIPE 29 | 1 |
| | 010047101 | SQUARE PIPE 30 | 1 |
| | 010047111 | SQUARE PIPE 31 | 1 |
| | 010047121 | SQUARE PIPE 32 | 4 |
| | 010047131 | SQUARE PIPE 33 | 1 |
| | 010047141 | SQUARE PIPE 34 | 1 |
| | 010047151 | SQUARE PIPE 35 | 1 |
| | 010047161 | SQUARE PIPE 36 | 1 |
| | 010047171 | SQUARE PIPE 37 | 1 |
| | 010047181 | SQUARE PIPE 01 | 3 |
| | 010047191 | SQUARE PIPE 02 | 2 |
| | 010047201 | SQUARE PIPE 03 | 1 |
| | 010047211 | SQUARE PIPE 04 | 2 |
| | | | |
| | | | |
| | | | |
| | | | |
| | | | |
| | | | |
| | | | |
| | | | |

| ASSB_NAME | PART NO. | NAME | QTY |
|---|---|---|---|
| BODY SIDE LH | | | |
| | | | |
| | | | |
| | | | |
| | | | |
| | | | |
| | | | |
|

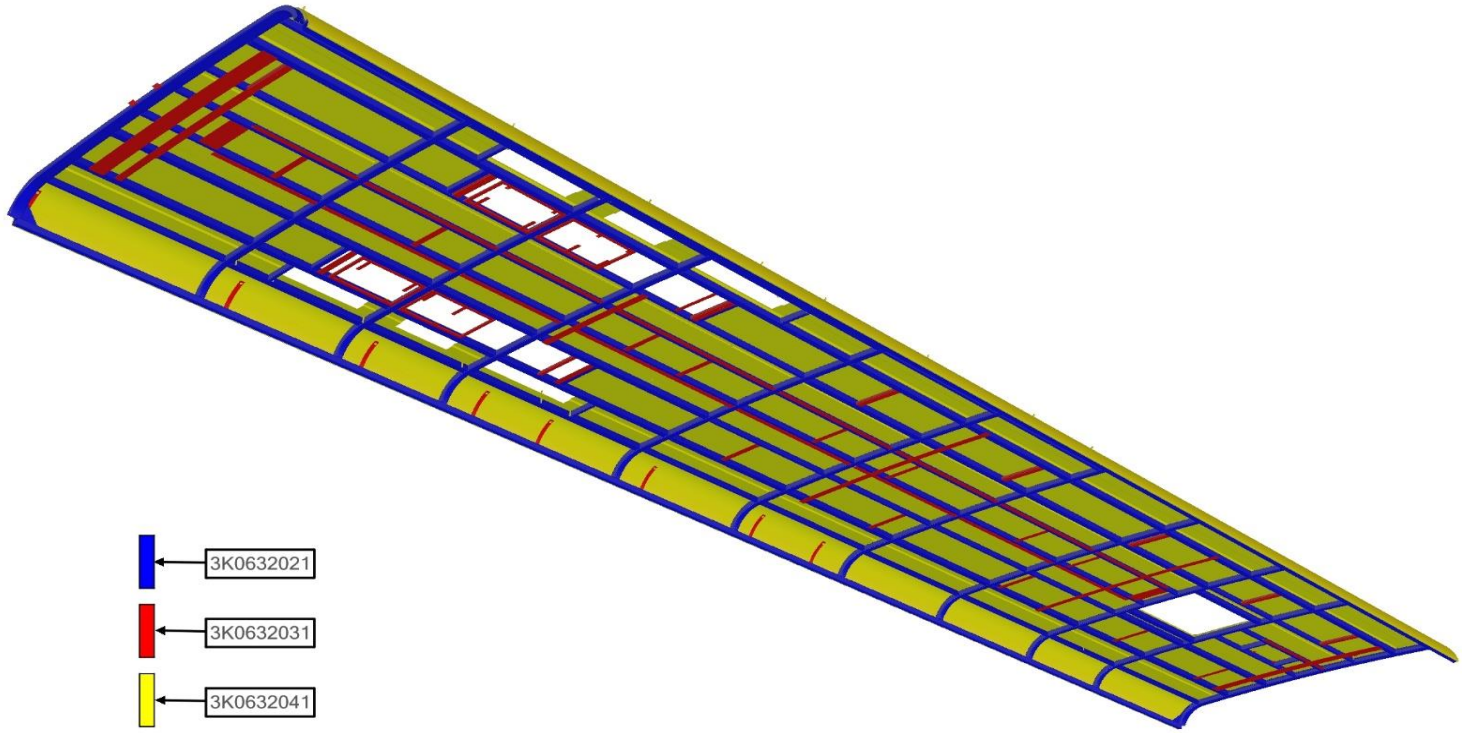


| NAME_ASSB | CODE_PART NO | NAME | QTY |
|---|---|---|---|
| ROOF FRAME - ASSY | 3K0632031 | CONNECTING ITEM | 1 |
| | 3K0632041 | ROOF STEEL SHEET - ASSY | 1 |
| | 3K0632021 | ROOF FRAME | 1 |
| | | | |
| | | | |
| | | | |
| | | | |

| NAME_ASSB | CODE_PART NO | NAME | QTY |
|---|---|---|---|
| ROOF FRAME - ASSY | | | |
| | | | |
| | | | |
| | | | |
| | | | |
| | | | |
| | | | |

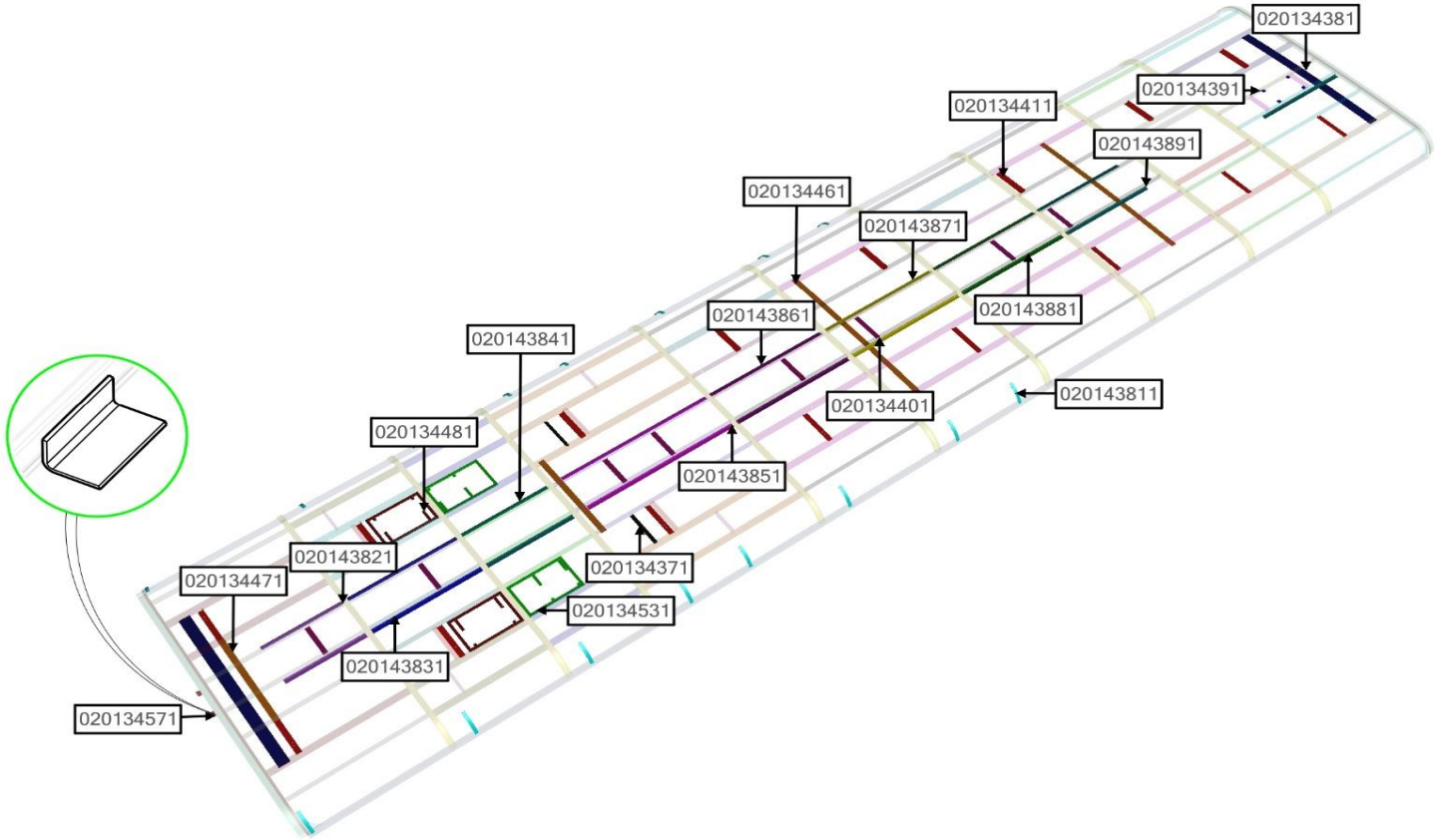


| NAME_ASSB | CODE_PART NO | NAME | QTY |
|---|---|---|---|
| CONNECTING ITEM | 020134371 | BRACKET | 2 |
| | 020134381 | BRACKET | 2 |
| | 020134391 | BRACKET | 4 |
| | 020134401 | BRACKET | 8 |
| | 020134411 | BRACKET | 16 |
| | 020134461 | BRACKET | 2 |
| | 020134471 | BRACKET | 2 |

| NAME_ASSB | CODE_PART NO | NAME | QTY |
|---|---|---|---|
| CONNECTING ITEM | 020134481 | BRACKET | 2 |
| | 020134531 | BRACKET | 2 |
| | 020134571 | BRACKET | 2 |
| | 020143811 | BRACKET | 16 |
| | 020143821 | BRACKET | 2 |
| | 020143831 | BRACKET 01 | 2 |
| | 020143841 | BRACKET 02 | 2 |

| ASSB_NAME | PART NO. | NAME | QTY |
|---|---|---|---|
| CONNECTING ITEM | 020143851 | BRACKET 03 | 2 |
| | 020143861 | BRACKET 04 | 2 |
| | 020143871 | BRACKET 05 | 2 |
| | 020143881 | BRACKET 06 | 2 |
| | 020143891 | BRACKET 07 | 3 |

| ASSB_NAME | PART NO. | NAME | QTY |
|---|---|---|---|
| CONNECTING ITEM | | | |

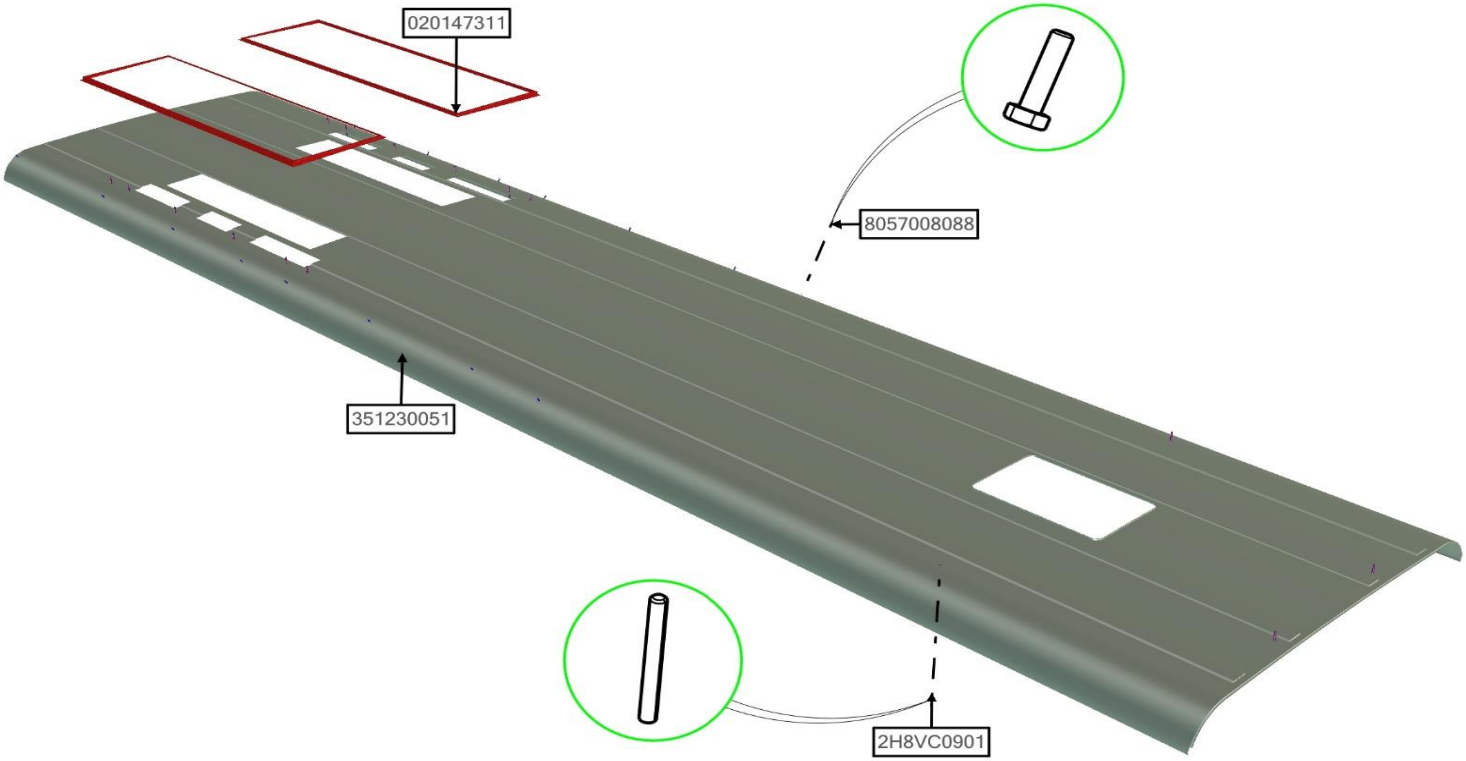


| NAME_ASSB | CODE_PART NO | NAME | QTY |
|---|---|---|---|
| ROOF STEEL SHEET - ASSY | 2H8VC0901 | BOLT 10090150 | 16 |
| | 020147311 | AIR CONDITIONING FRAME | 2 |
| | 351230051 | STEEL SHEET 01 | 1 |
| | 8057008088 | BOLT 08030125 | 17 |
| | | | |
| | | | |
| | | | |

| NAME_ASSB | CODE_PART NO | NAME | QTY |
|---|---|---|---|
| ROOF STEEL SHEET - ASSY | | | |
| | | | |
| | | | |
| | | | |
| | | | |
| | | | |
| | | | |

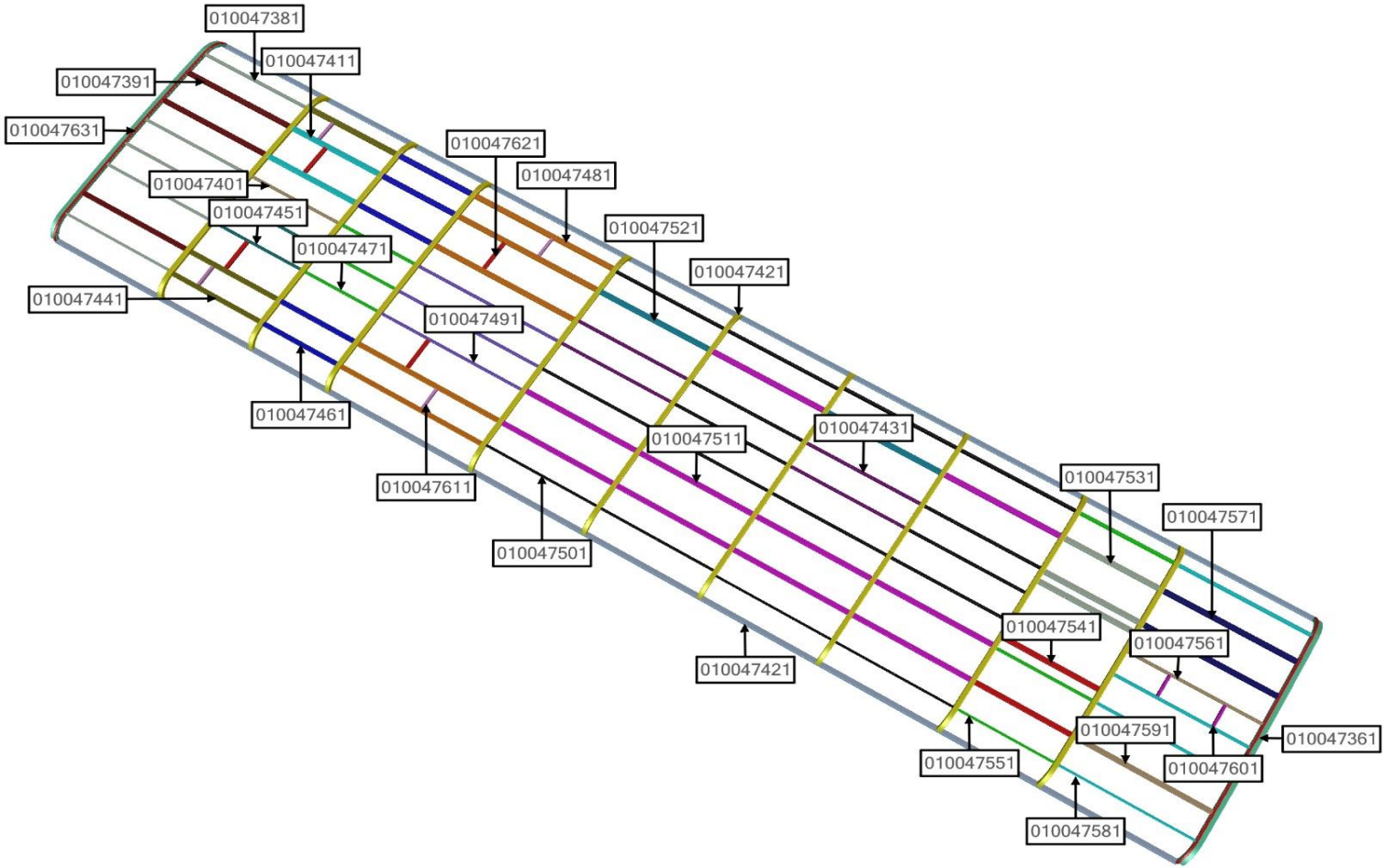


| NAME_ASSB | CODE_PART NO | NAME | QTY |
|---|---|---|---|
| ROOF FRAME | 010047361 | SQUARE PIPE 01 | 2 |
| | 010047371 | SQUARE PIPE 02 | 9 |
| | 010047381 | SQUARE PIPE 03 | 5 |
| | 010047391 | SQUARE PIPE 04 | 3 |
| | 010047401 | SQUARE PIPE 05 | 1 |
| | 010047411 | SQUARE PIPE 06 | 2 |
| | 010047421 | SQUARE PIPE 07 | 2 |

| NAME_ASSB | CODE_PART NO | NAME | QTY |
|---|---|---|---|
| ROOF FRAME | 010047431 | SQUARE PIPE 08 | 4 |
| | 010047441 | SQUARE PIPE 09 | 3 |
| | 010047451 | SQUARE PIPE 10 | 2 |
| | 010047461 | SQUARE PIPE 11 | 5 |
| | 010047471 | SQUARE PIPE 12 | 3 |
| | 010047481 | SQUARE PIPE 13 | 5 |
| | 010047491 | SQUARE PIPE 14 | 3 |

| ASSB_NAME | PART NO. | NAME | QTY |
|---|---|---|---|
| ROOF FRAME | 010047501 | SQUARE PIPE 15 | 16 |
| | 010047511 | SQUARE PIPE 16 | 10 |
| | 010047521 | SQUARE PIPE 17 | 2 |
| | 010047531 | SQUARE PIPE 18 | 3 |
| | 010047541 | SQUARE PIPE 19 | 2 |
| | 010047551 | SQUARE PIPE 20 | 3 |
| | 010047561 | SQUARE PIPE 21 | 1 |
| | 010047571 | SQUARE PIPE 22 | 2 |
| | 010047581 | SQUARE PIPE 23 | 4 |
| | 010047591 | SQUARE PIPE 24 | 1 |
| | 010047601 | SQUARE PIPE 25 | 2 |
| | 010047611 | SQUARE PIPE 26 | 4 |
| | 010047621 | SQUARE PIPE 27 | 4 |
| | 010047631 | SQUARE PIPE 28 | 2 |

| ASSB_NAME | PART NO. | NAME | QTY |
|---|---|---|---|
| ROOF FRAME | | | |

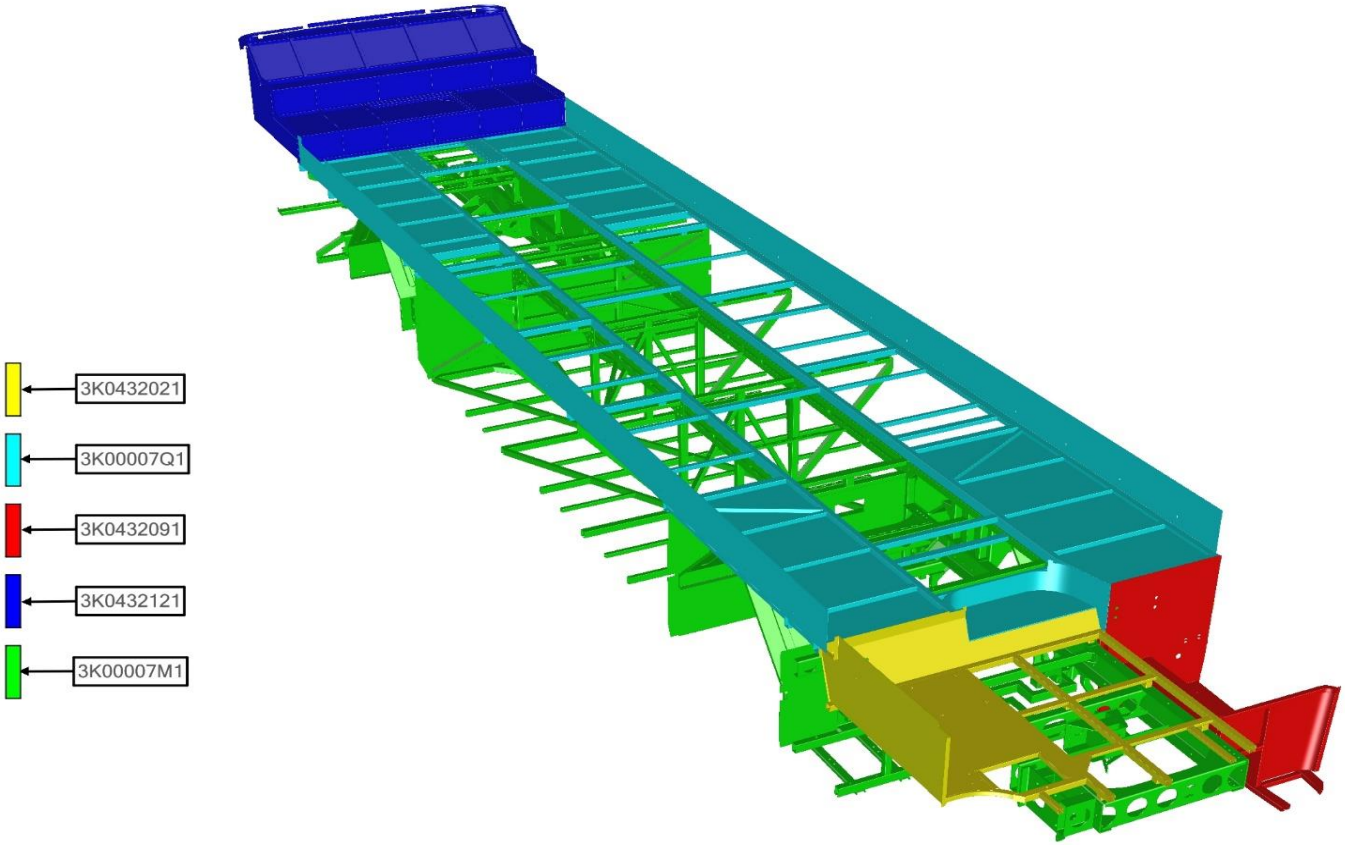


| NAME_ASSB | CODE_PART NO | NAME | QTY |
|---|---|---|---|
| FLOOR FRAME - ASSY | 3K00007M1 | CHASSIS | 1 |
| | 3K0432091 | STAIRS FRAME - ASSY | 1 |
| | 3K0432021 | CABIN FLOOR FRAME - ASSY | 1 |
| | 3K00007Q1 | MAIN FLOOR FRAME - ASSY | 1 |
| | 3K0432121 | ENGINE FLOOR FRAME - ASSY | 1 |
| | | | |
| | | | |

| NAME_ASSB | CODE_PART NO | NAME | QTY |
|---|---|---|---|
| FLOOR FRAME - ASSY | | | |
| | | | |
| | | | |
| | | | |
| | | | |
| | | | |
| | | | |

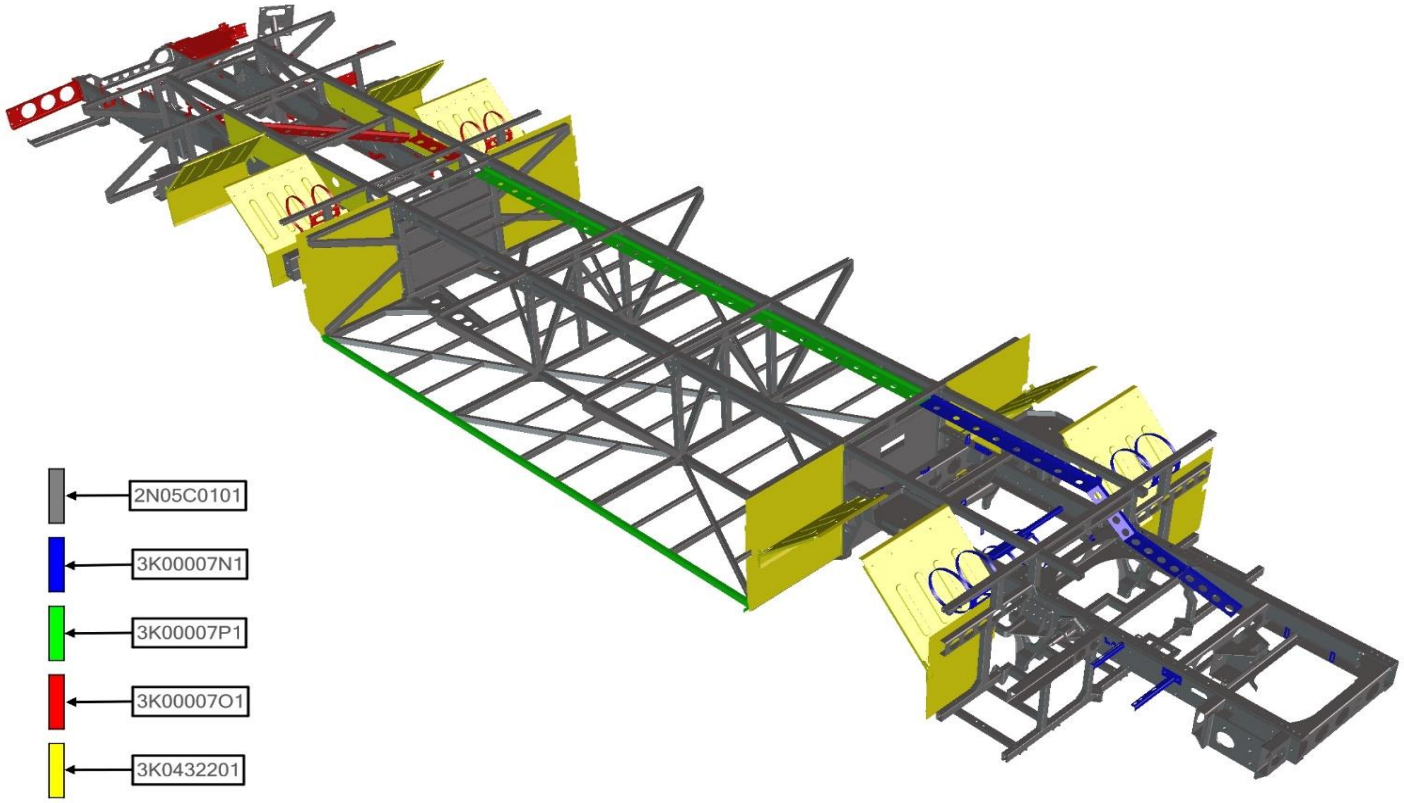


| ASSB_NAME | PART NO. | NAME | QTY |
|---|---|---|---|
| CHASSIS | 2N05C0101 | CHASSIS FRAME | 1 |
| | 3K00007N1 | FRONT OF CONNECTING ITEM | 1 |
| | 3K00007O1 | REAR OF CONNECTING ITEM | 1 |
| | 3K00007P1 | MIDDLE CONNECTING ITEM | 1 |
| | 3K0432201 | STEEL SHEET | 1 |
| | | | |
| | | | |

| ASSB_NAME | PART NO. | NAME | QTY |
|---|---|---|---|
| CHASSIS | | | |
| | | | |
| | | | |
| | | | |
| | | | |
| | | | |
| | | | |

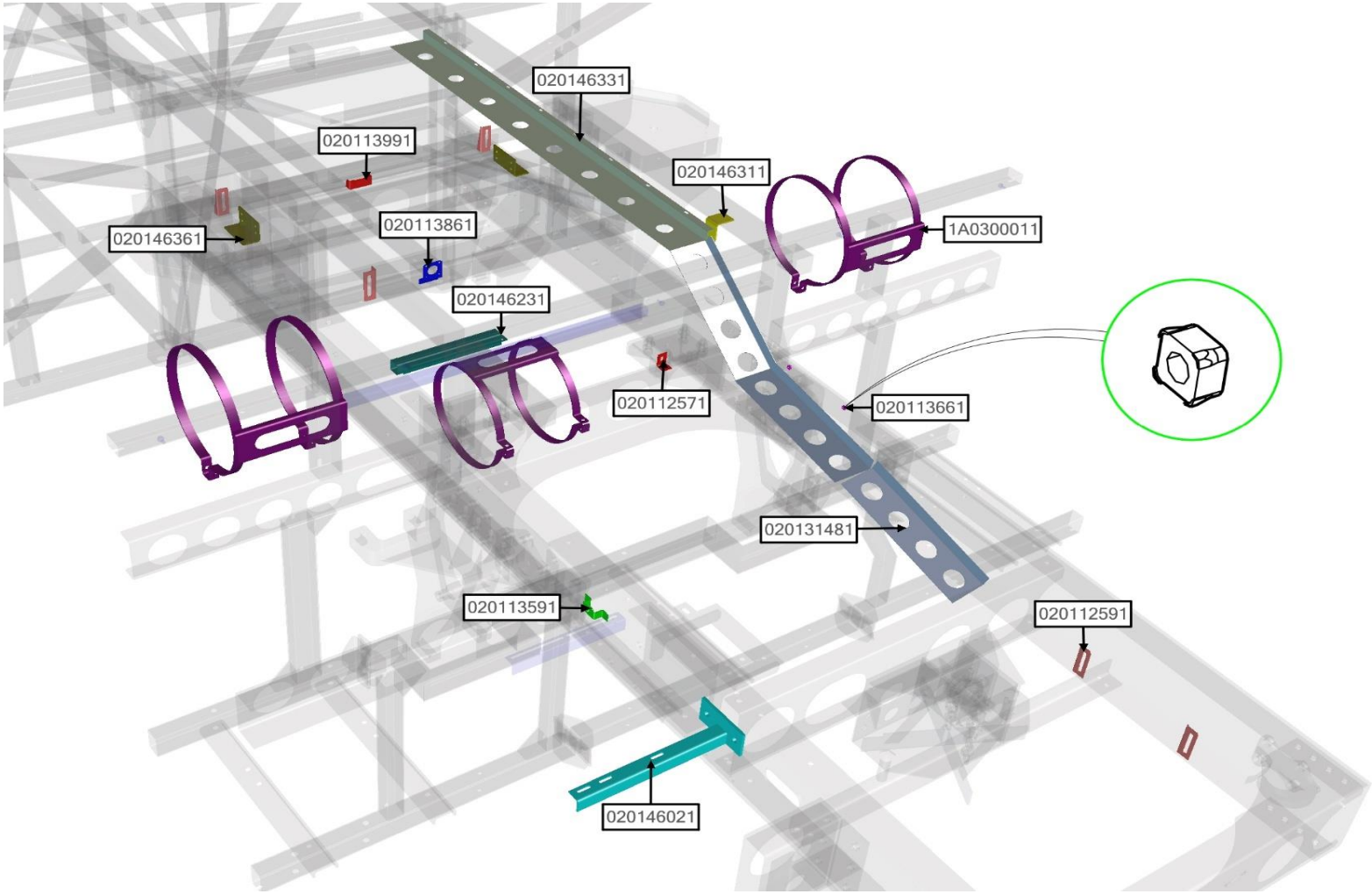


| ASSB_NAME | PART NO. | NAME | QTY |
|---|---|---|---|
| FRONT OF CONNECTING ITEM | 1A0300011 | BELT TANK | 3 |
| | 020112591 | BRACKET | 5 |
| | 020113661 | BRACKET | 2 |
| | 020113861 | BRACKET | 1 |
| | 020113991 | BRACKET | 1 |
| | 020131481 | ELECTRICAL DUCT 365 | 3 |
| | 020146021 | BRACKET | 1 |

| ASSB_NAME | PART NO. | NAME | QTY |
|---|---|---|---|
| FRONT OF CONNECTING ITEM | 020146231 | BRACKET | 1 |
| | 020146311 | BRACKET | 1 |
| | 020146331 | ELECTRICAL DUCT 02 | 1 |
| | 020146361 | BRACKET | 2 |
| | | | |
| | | | |
| | | | |

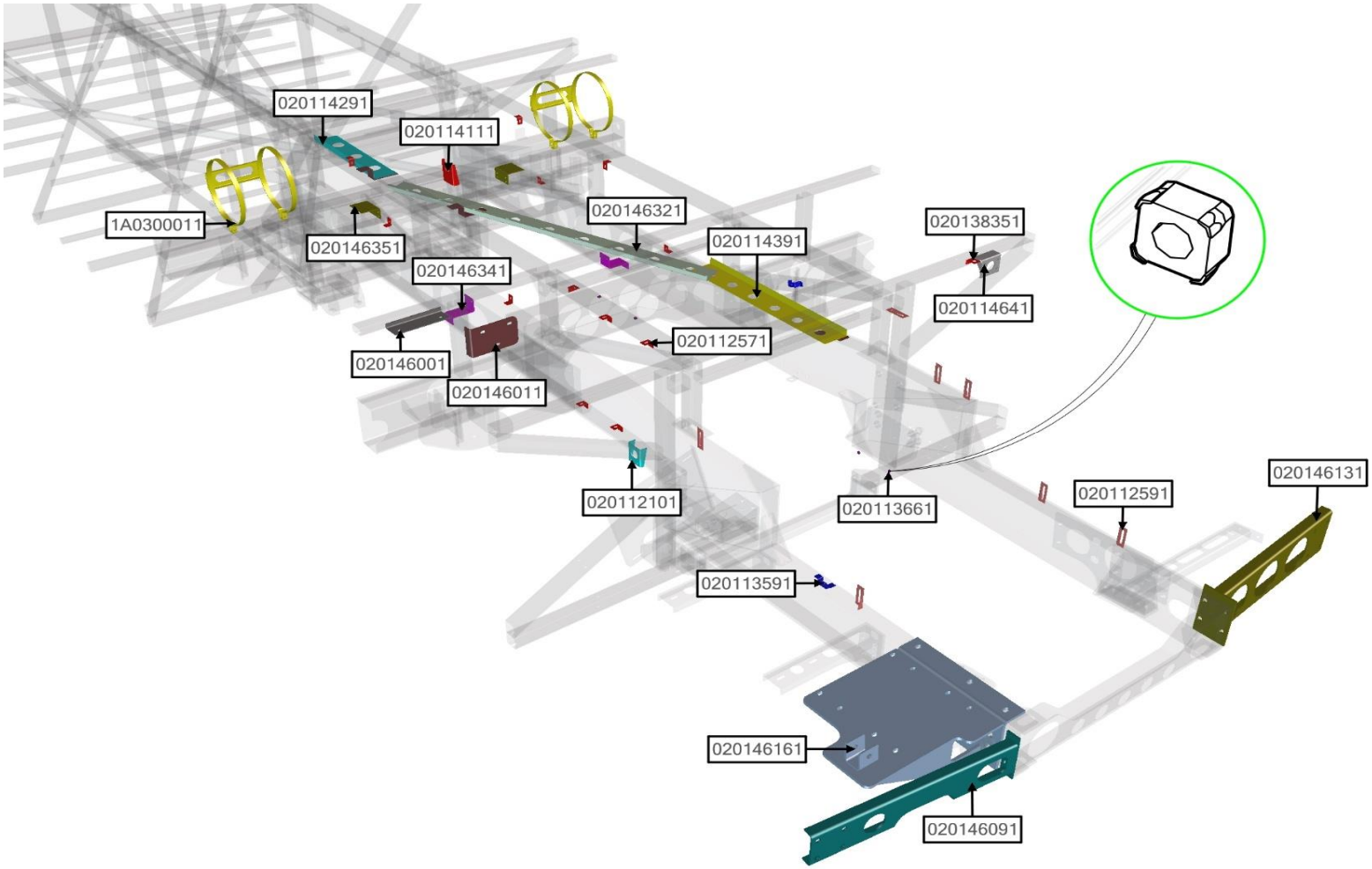


| ASSB_NAME | PART NO. | NAME | QTY |
|---|---|---|---|
| REAR OF CONNECTING ITEM | 1A0300011 | BELT TANK | 2 |
| | 020112101 | BRACKET | 1 |
| | 020112571 | BRACKET | 12 |
| | 020112591 | BRACKET | 7 |
| | 020113591 | BRACKET | 2 |
| | 020113661 | BRACKET | 4 |
| | 020114111 | BRACKET | 1 |

| ASSB_NAME | PART NO. | NAME | QTY |
|---|---|---|---|
| REAR OF CONNECTING ITEM | 020114291 | ELECTRICAL DUCT 04 | 1 |
| | 020114391 | ELECTRICAL DUCT 05 | 1 |
| | 020114641 | BRACKET | 1 |
| | 020138351 | BRACKET | 1 |
| | 020146001 | BRACKET | 1 |
| | 020146011 | BRACKET | 1 |
| | 020146091 | LINTEL LH | 1 |

| ASSB_NAME | PART NO. | NAME | QTY |
|---|---|---|---|
| REAR OF CONNECTING ITEM | 020146131 | LINTEL BELOW | 1 |
| | 020146161 | BRACKET | 1 |
| | 020146321 | ELECTRICAL DUCT 01 | 1 |
| | 020146341 | BRACKET | 2 |
| | 020146351 | BRACKET | 2 |

| ASSB_NAME | PART NO. | NAME | QTY |
|---|---|---|---|
| REAR OF CONNECTING ITEM | | | |

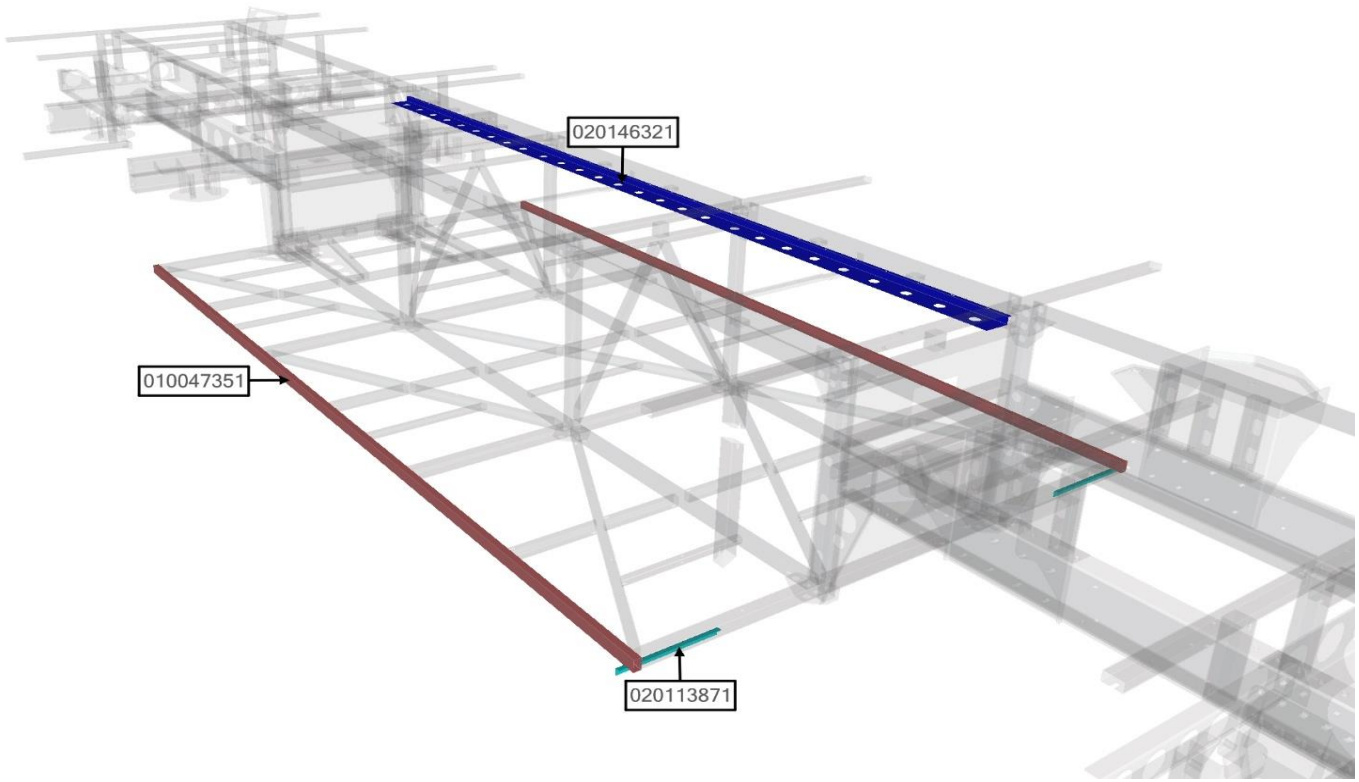


| ASSB_NAME | PART NO. | NAME | QTY |
|---|---|---|---|
| MIDDLE CONNECTING ITEM | 10047351 | VERTICAL ROD | 2 |
| | 20113871 | BRACKET | 2 |
| | 20146321 | ELECTRICAL DUCT 01 | 3 |
| | | | |
| | | | |
| | | | |
| | | | |

| ASSB_NAME | PART NO. | NAME | QTY |
|---|---|---|---|
| MIDDLE CONNECTING ITEM | | | |
| | | | |
| | | | |
| | | | |
| | | | |
| | | | |
| | | | |

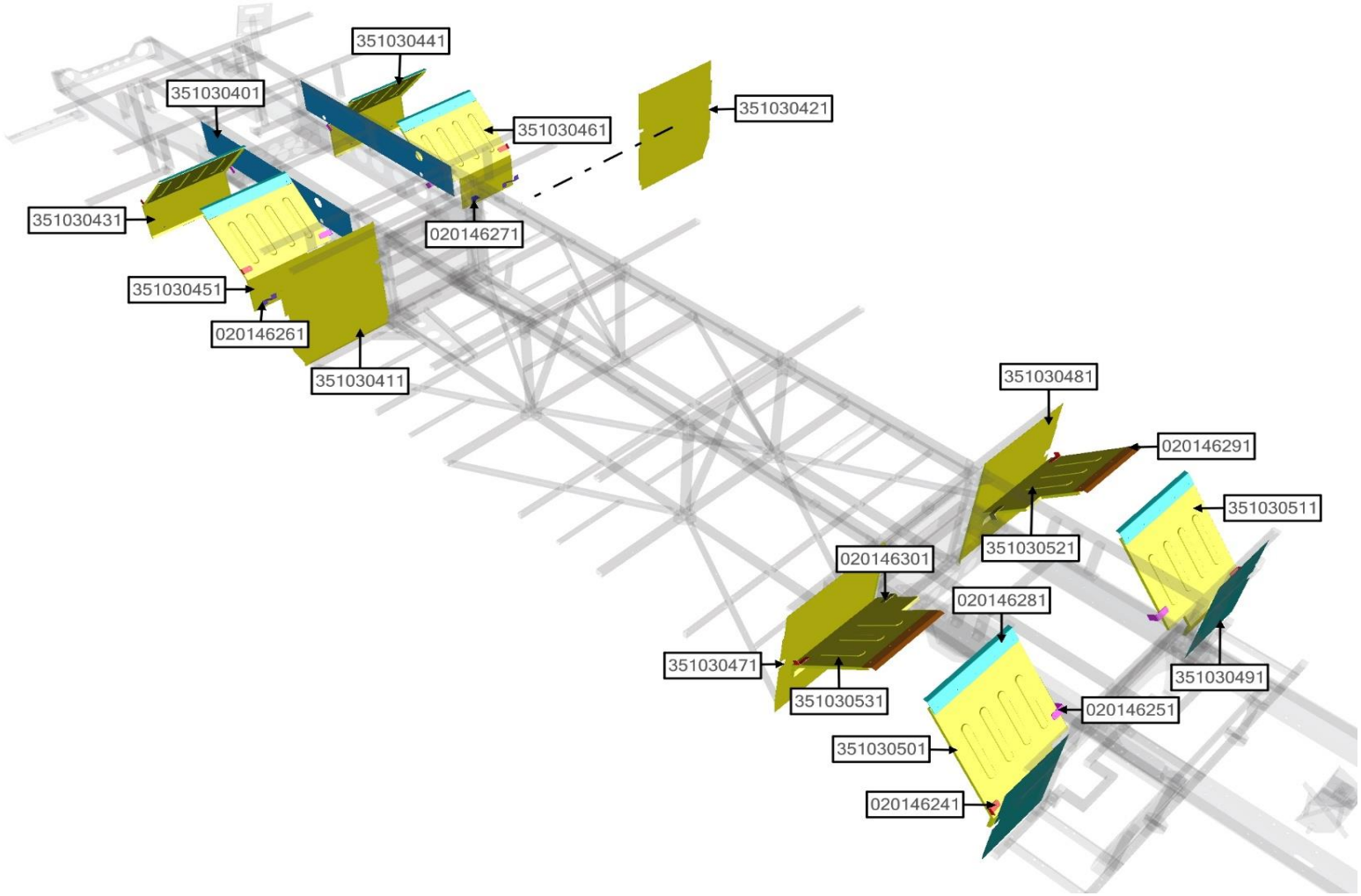


| ASSB_NAME | PART NO. | NAME | QTY |
|---|---|---|---|
| STEEL SHEET | 020146241 | BRACKET 01 | 8 |
| | 020146251 | BRACKET 02 | 6 |
| | 020146261 | BRACKET 03 | 6 |
| | 020146271 | BRACKET 04 | 2 |
| | 020146281 | ROD 01 | 6 |
| | 020146291 | ROD 02 | 2 |
| | 020146301 | BRACKET 05 | 2 |
| | 351030401 | REAR STEEL SHEET 01 | 2 |

| ASSB_NAME | PART NO. | NAME | QTY |
|---|---|---|---|
| STEEL SHEET | 351030411 | REAR STEEL SHEET 02 | 1 |
| | 351030421 | REAR STEEL SHEET 03 | 1 |
| | 351030431 | REAR STEEL SHEET 04 | 1 |
| | 351030441 | REAR STEEL SHEET 05 | 1 |
| | 351030451 | REAR STEEL SHEET 06 | 1 |
| | 351030461 | REAR STEEL SHEET 07 | 1 |
| | 351030471 | FRONT STEEL SHEET 01 | 1 |
| | 351030481 | FRONT STEEL SHEET 02 | 1 |

| ASSB_NAME | PART NO. | NAME | QTY |
|---|---|---|---|
| STEEL SHEET | 351030491 | FRONT STEEL SHEET 03 | 2 |
| | 351030501 | FRONT STEEL SHEET 04 | 1 |
| | 351030511 | FRONT STEEL SHEET 05 | 1 |
| | 351030521 | FRONT STEEL SHEET 06 | 1 |
| | 351030531 | FRONT STEEL SHEET 07 | 1 |

| ASSB_NAME | PART NO. | NAME | QTY |
|---|---|---|---|
| STEEL SHEET | | | |

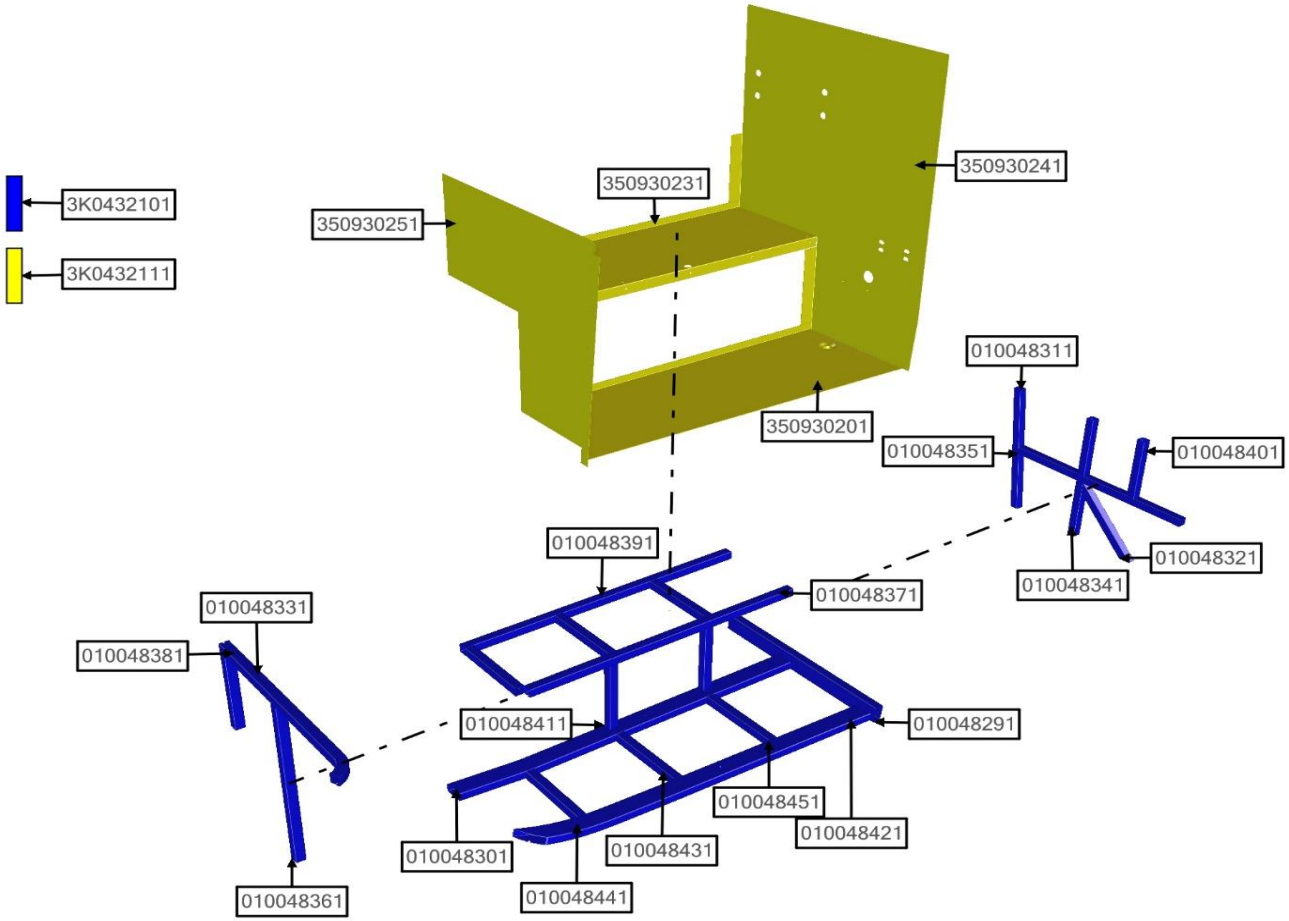


| ASSB_NAME | PART NO. | NAME | QTY |
|---|---|---|---|
| STAIRS FRAME ASSY | 3K0432101 | STAIRS FRAME | 1 |
| | 3K0432111 | STEEL SHEET - ASSY | 1 |
| | 010048291 | SQUARE PIPE 01 | 1 |
| | 010048301 | SQUARE PIPE 02 | 1 |
| | 010048311 | SQUARE PIPE 03 | 1 |
| | 010048321 | SQUARE PIPE 04 | 2 |
| | 010048331 | SQUARE PIPE 05 | 3 |
| | 010048341 | SQUARE PIPE 06 | 4 |

| ASSB_NAME | PART NO. | NAME | QTY |
|---|---|---|---|
| STAIRS FRAME ASSY | 010048351 | SQUARE PIPE 07 | 1 |
| | 010048361 | SQUARE PIPE 08 | 1 |
| | 010048371 | SQUARE PIPE 09 | 1 |
| | 010048381 | SQUARE PIPE 10 | 4 |
| | 010048391 | SQUARE PIPE 11 | 1 |
| | 010048401 | SQUARE PIPE 12 | 2 |
| | 010048411 | SQUARE PIPE 13 | 2 |
| | 010048421 | SQUARE PIPE 14 | 1 |

| ASSB_NAME | PART NO. | NAME | QTY |
|---|---|---|---|
| STAIRS FRAME ASSY | 010048431 | SQUARE PIPE 15 | 1 |
| | 010048441 | SQUARE PIPE 16 | 1 |
| | 010048451 | SQUARE PIPE 17 | 1 |
| | 350930201 | STEEL SHEET 01 | 1 |
| | 350930231 | STEEL SHEET 02 | 1 |
| | 350930241 | STEEL SHEET 03 | 1 |
| | 350930251 | STEEL SHEET 04 | 1 |

| ASSB_NAME | PART NO. | NAME | QTY |
|---|---|---|---|
| STAIRS FRAME ASSY | | | |

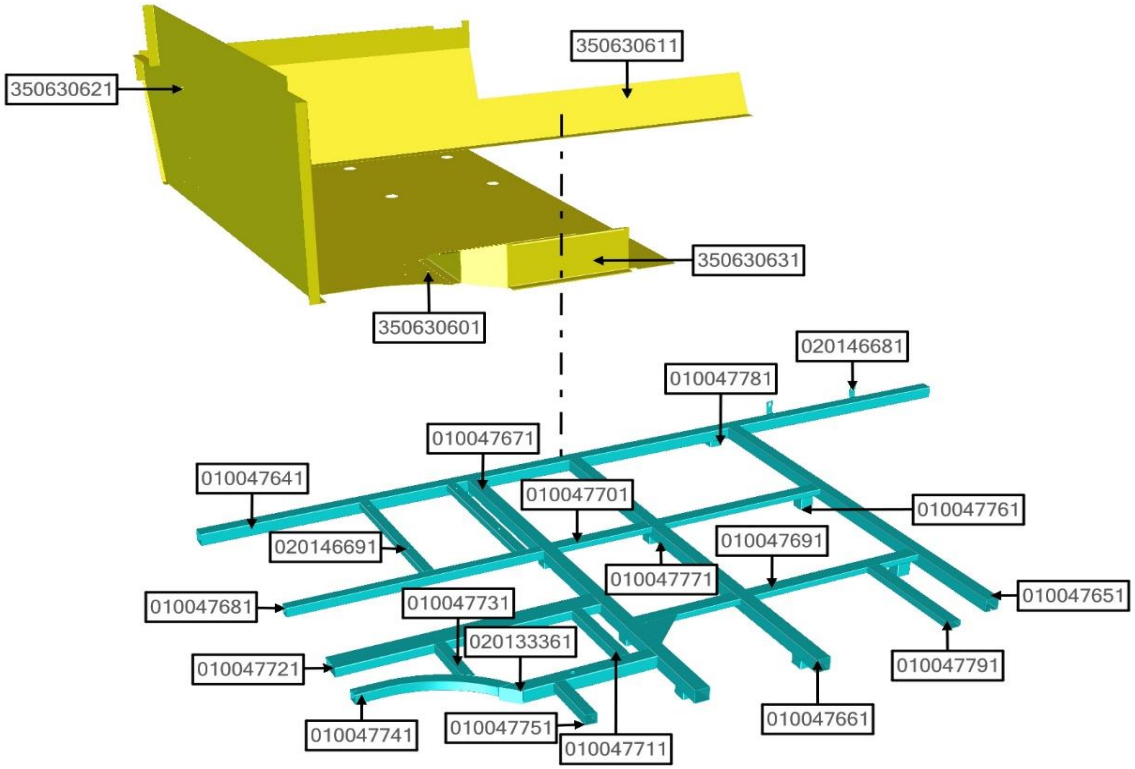


| ASSB_NAME | PART NO. | NAME | QTY |
|---|---|---|---|
| CABIN FLOOR FRAME - ASSY | 3K0432031 | CABIN FLOOR FRAME | 1 |
| | 3K0432041 | CABIN STEEL SHEET - ASSY | 1 |
| | 010047641 | SQUARE PIPE 01 | 1 |
| | 010047651 | SQUARE PIPE 02 | 1 |
| | 010047661 | SQUARE PIPE 03 | 1 |
| | 010047671 | SQUARE PIPE 04 | 1 |
| | 010047681 | SQUARE PIPE 05 | 1 |

| ASSB_NAME | PART NO. | NAME | QTY |
|---|---|---|---|
| CABIN FLOOR FRAME - ASSY | 010047691 | SQUARE PIPE 06 | 2 |
| | 010047701 | SQUARE PIPE 07 | 2 |
| | 010047711 | SQUARE PIPE 08 | 1 |
| | 010047721 | SQUARE PIPE 09 | 1 |
| | 010047731 | SQUARE PIPE 10 | 1 |
| | 010047741 | SQUARE PIPE 11 | 1 |
| | 010047751 | SQUARE PIPE 12 | 1 |

| ASSB_NAME | PART NO. | NAME | QTY |
|---|---|---|---|
| CABIN FLOOR FRAME - ASSY | 010047761 | SQUARE PIPE 13 | 2 |
| | 010047771 | SQUARE PIPE 14 | 2 |
| | 010047781 | SQUARE PIPE 15 | 5 |
| | 010047791 | SQUARE PIPE 16 | 1 |
| | 010047801 | SQUARE PIPE 17 | 1 |
| | 020146681 | BRACKET | 2 |
| | 020146691 | BRACKET | 2 |
| | 350630601 | STEEL SHEET 01 | 1 |
| | 350630611 | STEEL SHEET 02 | 1 |
| | 350630621 | STEEL SHEET 03 | 1 |
| | 350630631 | BRACKET ASSY | 1 |

| ASSB_NAME | PART NO. | NAME | QTY |
|---|---|---|---|
| CABIN FLOOR FRAME - ASSY | | | |

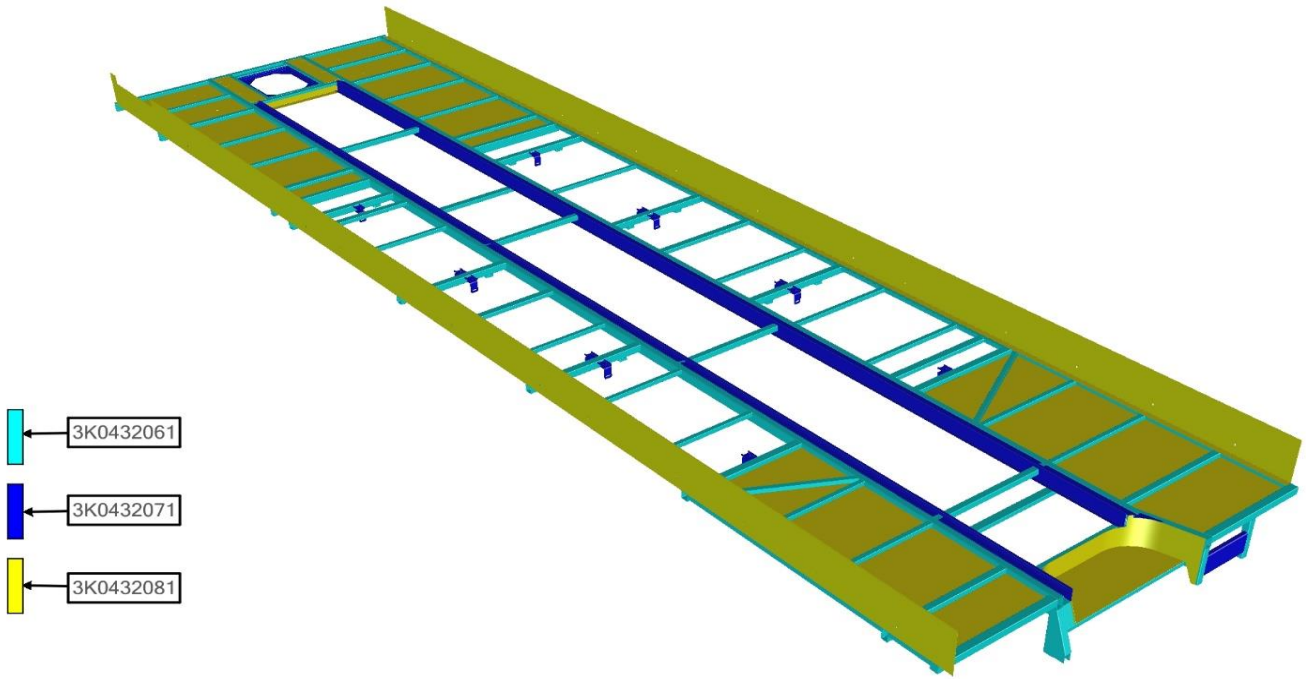


| ASSB_NAME | PART NO. | NAME | QTY |
|---|---|---|---|
| MAIN FLOOR FRAME - ASSY | 3K0432071 | CONNECTING ITEM | 1 |
| | 3K0432081 | STEEL SHEET - ASSY | 1 |
| | 3K0432061 | MAIN FLOOR FRAME - ASSY | 1 |
| | | | |
| | | | |
| | | | |
| | | | |
| | | | |

| ASSB_NAME | PART NO. | NAME | QTY |
|---|---|---|---|
| MAIN FLOOR FRAME - ASSY | | | |
| | | | |
| | | | |
| | | | |
| | | | |
| | | | |
| | | | |
| | | | |

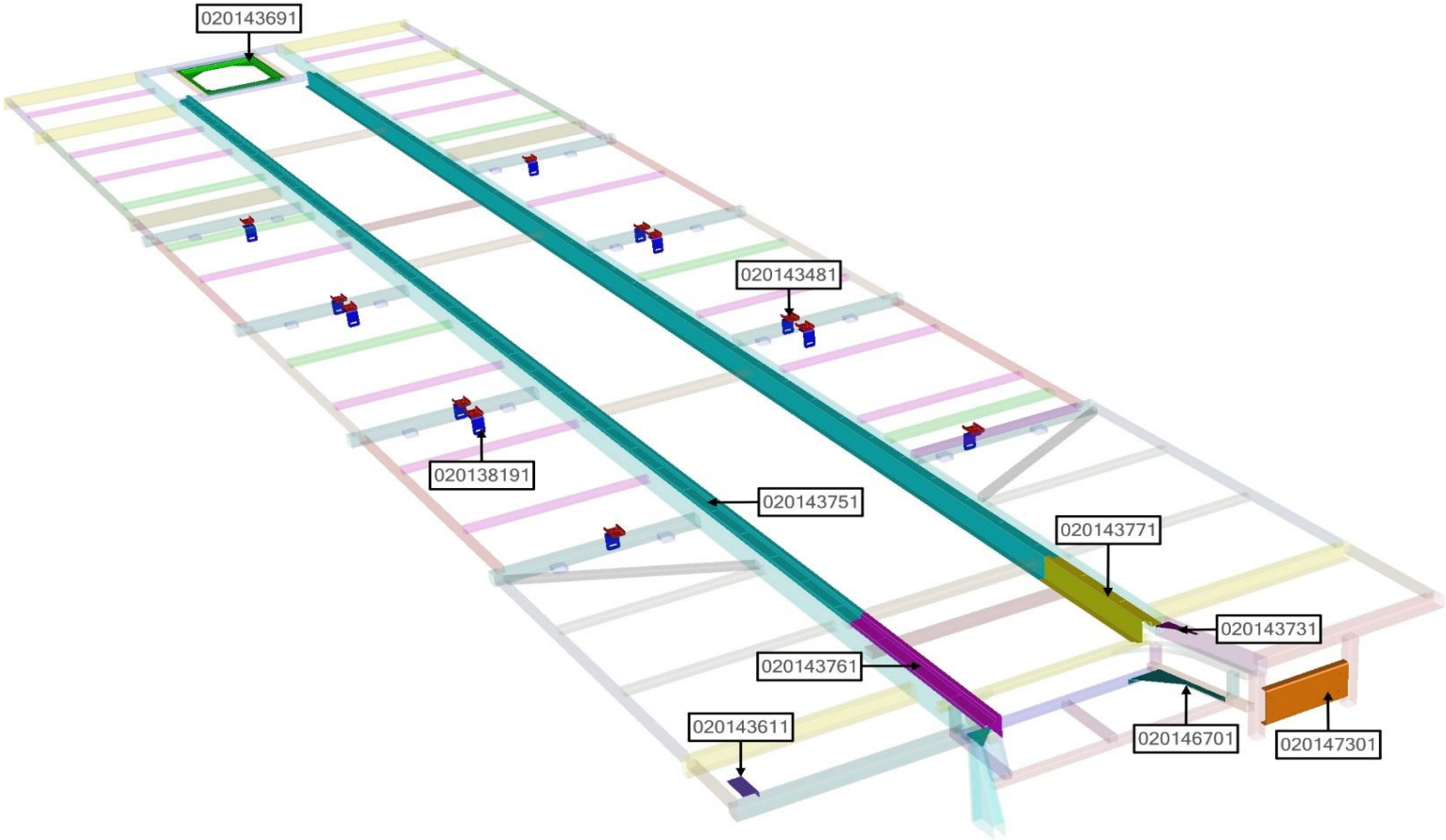


| ASSB_NAME | PART NO. | NAME | QTY |
|---|---|---|---|
| CONNECTING ITEM | 020138191 | BRACKET | 12 |
| | 020143481 | BRACKET | 12 |
| | 020143611 | BRACKET | 1 |
| | 020143691 | TRANSMISSION CHECKING HATCHES | 1 |
| | 020143731 | BRACKET | 1 |
| | 020143751 | SEAT TRACK 01 | 6 |
| | 020143761 | SEAT TRACK 02 | 1 |
| | 020143771 | SEAT TRACK 03 | 1 |

| ASSB_NAME | PART NO. | NAME | QTY |
|---|---|---|---|
| CONNECTING ITEM | 020146701 | BRACKET | 1 |
| | 020147301 | BRACKET | 1 |
| | | | |
| | | | |
| | | | |
| | | | |
| | | | |
| | | | |

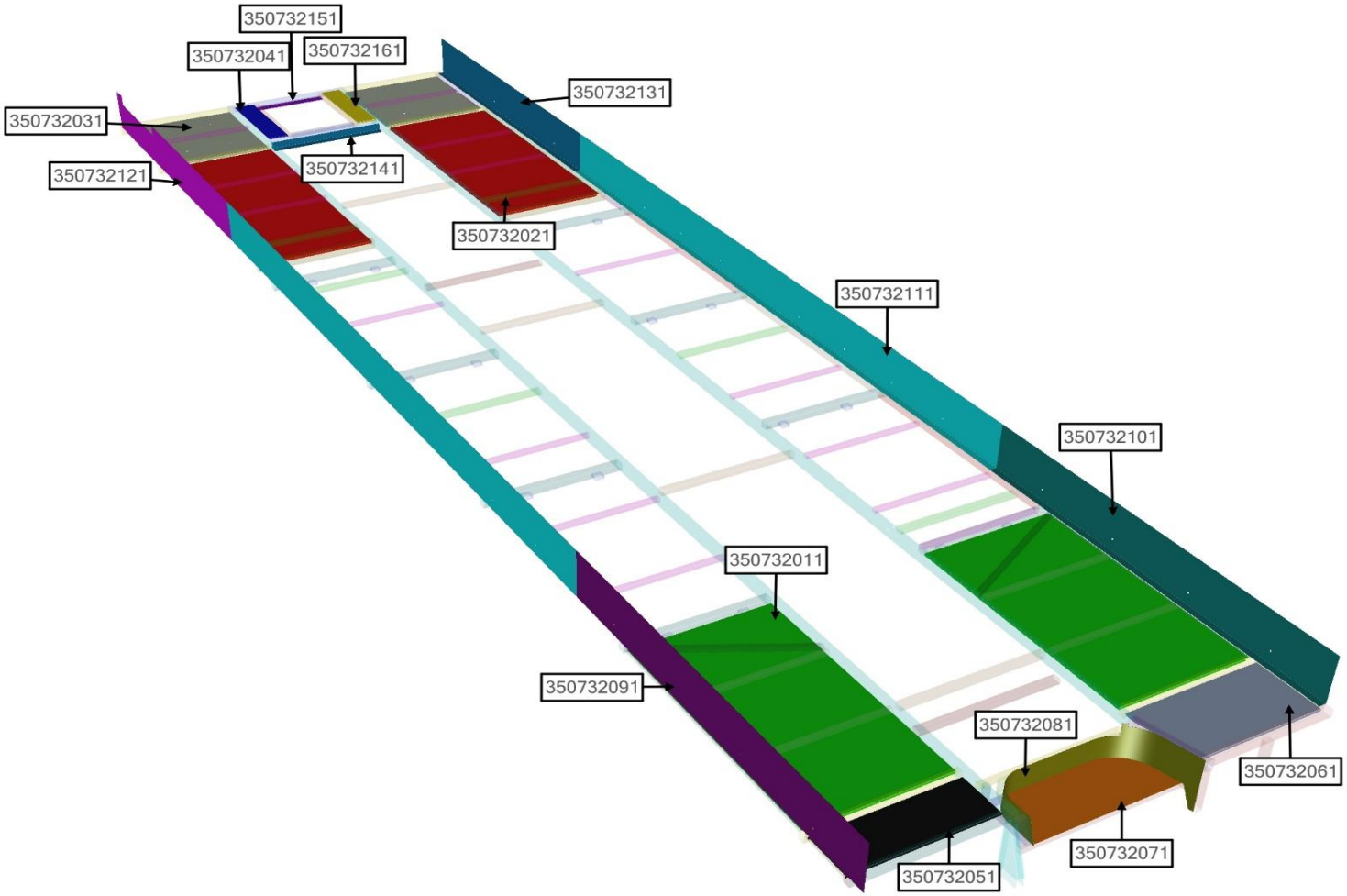


| ASSB_NAME | PART NO. | NAME | QTY |
|---|---|---|---|
| STEEL SHEET - ASSY | 350732011 | STEEL SHEET 01 | 2 |
| | 350732021 | STEEL SHEET 02 | 2 |
| | 350732031 | STEEL SHEET 03 | 2 |
| | 350732041 | STEEL SHEET 04 | 1 |
| | 350732051 | STEEL SHEET 05 | 1 |
| | 350732061 | STEEL SHEET 06 | 1 |
| | 350732071 | STEEL SHEET 07 | 1 |
| | 350732081 | STEEL SHEET 08 | 1 |

| ASSB_NAME | PART NO. | NAME | QTY |
|---|---|---|---|
| STEEL SHEET - ASSY | 350732091 | STEEL SHEET RH 01 | 1 |
| | 350732101 | STEEL SHEET LH 01 | 1 |
| | 350732111 | STEEL SHEET 02 | 4 |
| | 350732121 | STEEL SHEET 03 | 1 |
| | 350732131 | STEEL SHEET 04 | 1 |
| | 350732151 | STEEL SHEET 09 | 1 |
| | 350732161 | STEEL SHEET 10 | 1 |
| | | | |

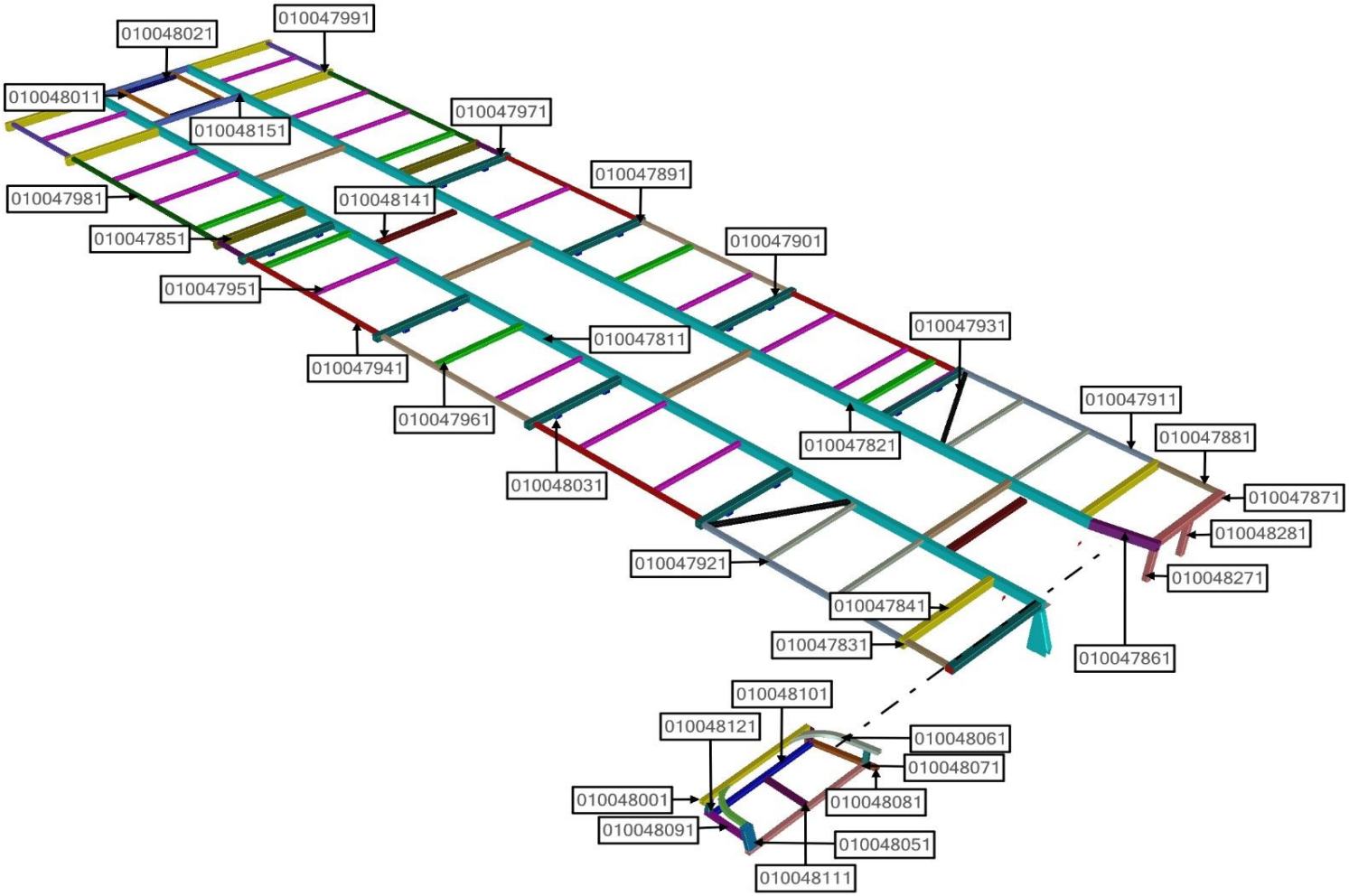


| ASSB_NAME | PART NO. | NAME | QTY |
|---|---|---|---|
| MAIN FLOOR FRAME - ASSY | 010047811 | SQUARE PIPE 01 | 1 |
| | 010047821 | SQUARE PIPE 02 | 1 |
| | 010047831 | SQUARE PIPE 03 | 1 |
| | 010047841 | SQUARE PIPE 04 | 6 |
| | 010047851 | SQUARE PIPE 05 | 2 |
| | 010047861 | SQUARE PIPE 06 | 1 |
| | 010047871 | SQUARE PIPE 07 | 1 |
| | 010047881 | SQUARE PIPE 08 | 1 |

| ASSB_NAME | PART NO. | NAME | QTY |
|---|---|---|---|
| MAIN FLOOR FRAME - ASSY | 010047891 | SQUARE PIPE 09 | 2 |
| | 010047901 | SQUARE PIPE 10 | 9 |
| | 010047911 | SQUARE PIPE 11 | 2 |
| | 010047921 | SQUARE PIPE 12 | 4 |
| | 010047931 | SQUARE PIPE 13 | 2 |
| | 010047941 | SQUARE PIPE 14 | 4 |
| | 010047951 | SQUARE PIPE 15 | 15 |
| | 010047961 | SQUARE PIPE 16 | 6 |

| ASSB_NAME | PART NO. | NAME | QTY |
|---|---|---|---|
| MAIN FLOOR FRAME - ASSY | 010047971 | SQUARE PIPE 17 | 2 |
| | 010047981 | SQUARE PIPE 18 | 2 |
| | 010047991 | SQUARE PIPE 19 | 2 |
| | 010048001 | SQUARE PIPE 20 | 1 |
| | 010048011 | SQUARE PIPE 21 | 2 |
| | 010048021 | SQUARE PIPE 22 | 2 |
| | 010048031 | SQUARE PIPE 23 | 16 |
| | 010048041 | SQUARE PIPE 24 | 1 |
| | 010048051 | SQUARE PIPE 25 | 1 |
| | 010048061 | SQUARE PIPE 26 | 1 |
| | 010048071 | SQUARE PIPE 27 | 1 |
| | 010048081 | SQUARE PIPE 28 | 1 |
| | 010048091 | SQUARE PIPE 29 | 1 |
| | 010048101 | SQUARE PIPE 30 | 1 |
| | 010048111 | SQUARE PIPE 31 | 1 |
| | 010048121 | SQUARE PIPE 32 | 2 |
| | 010048131 | SQUARE PIPE 33 | 1 |
| | 010048141 | SQUARE PIPE 34 | 2 |
| | 010048151 | SQUARE PIPE 35 | 2 |
| | 010048271 | SQUARE PIPE 36 | 1 |
| | 010048281 | SQUARE PIPE 37 | 1 |

| ASSB_NAME | PART NO. | NAME | QTY |
|---|---|---|---|
| MAIN FLOOR FRAME - ASSY | | | |

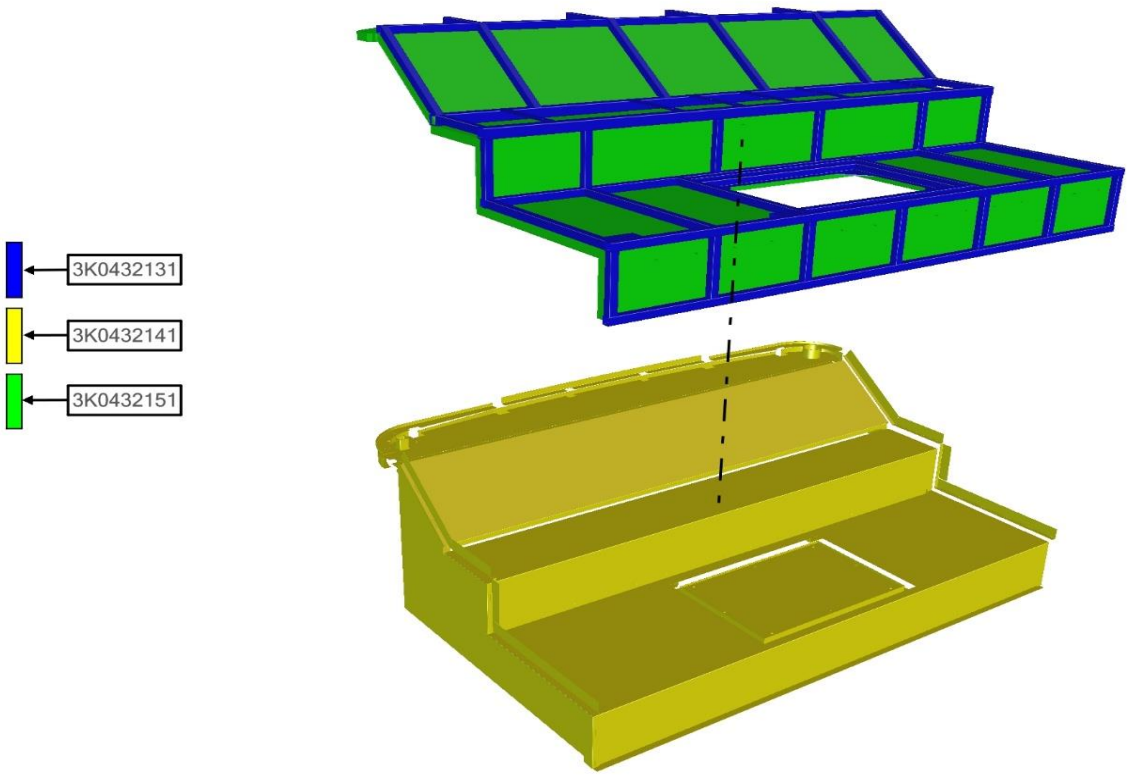


| ASSB_NAME | PART NO. | NAME | QTY |
|---|---|---|---|
| ENGINE FLOOR FRAME - ASSY | 3K0432151 | INSULATION | 1 |
| | 3K0432141 | STEEL SHEET | 1 |
| | 3K0432131 | ENGINE FLOOR FRAME | 1 |
| | | | |
| | | | |
| | | | |
| | | | |

| ASSB_NAME | PART NO. | NAME | QTY |
|---|---|---|---|
| ENGINE FLOOR FRAME - ASSY | | | |
| | | | |
| | | | |
| | | | |
| | | | |
| | | | |
| | | | |

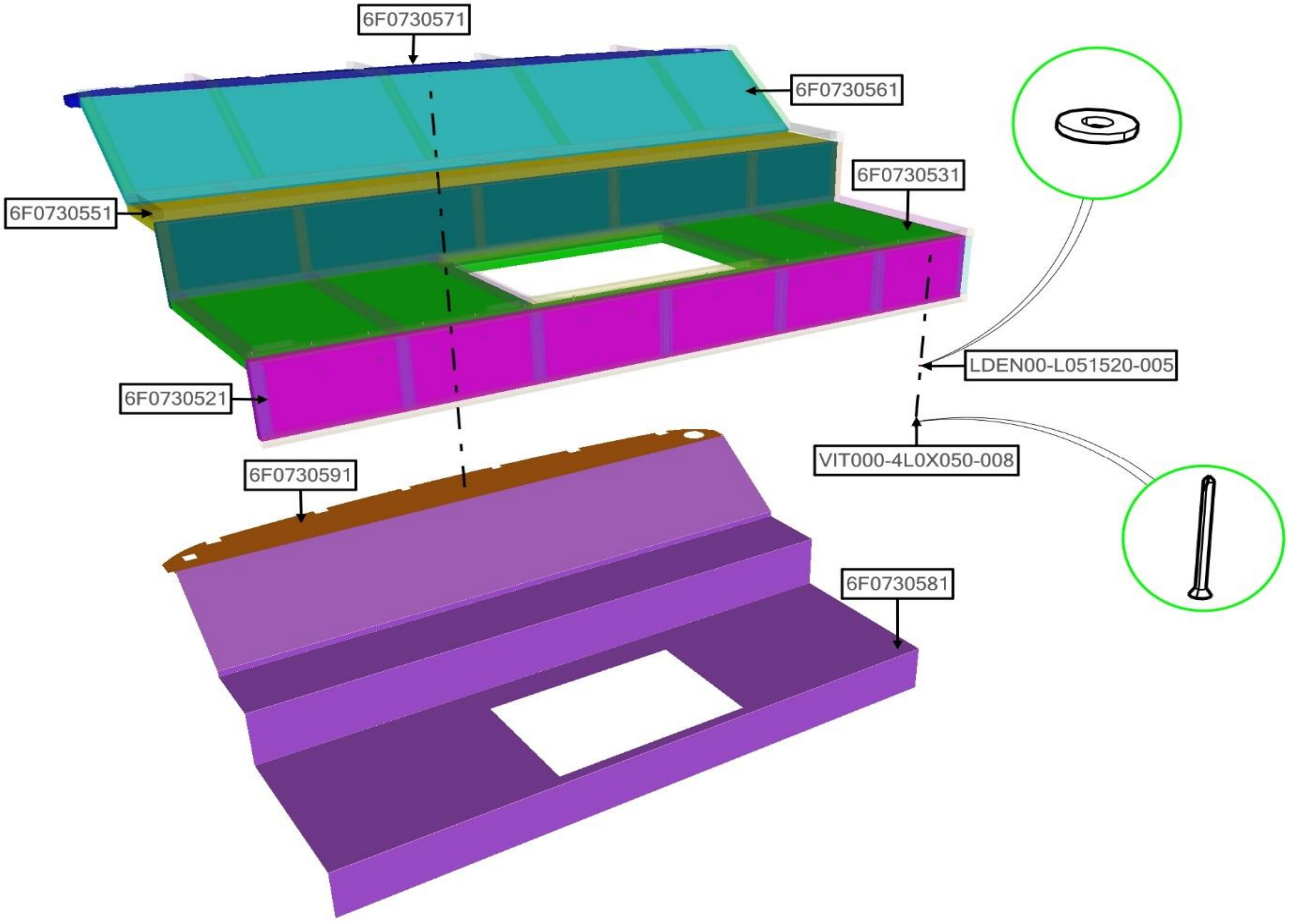


| ASSB_NAME | PART NO. | NAME | QTY |
|---|---|---|---|
| INSULATION | 6F0730521 | INSULATION 01 | 1 |
| | 6F0730531 | INSULATION 02 | 1 |
| | 6F0730541 | INSULATION 03 | 1 |
| | 6F0730551 | INSULATION 04 | 1 |
| | 6F0730561 | INSULATION 05 | 1 |
| | 6F0730571 | INSULATION 06 | 1 |
| | 6F0730581 | ALUMIUM GIRD 01 | 2 |
| | 6F0730591 | ALUMIUM GIRD 02 | 1 |

| ASSB_NAME | PART NO. | NAME | QTY |
|---|---|---|---|
| INSULATION | LDEN00-L051520-005 | WASHER Ø5xØ15x2.0 | 64 |
| | VIT000-4L0X050-008 | SCREW M4x50 | 64 |
| | | | |
| | | | |
| | | | |
| | | | |
| | | | |
| | | | |

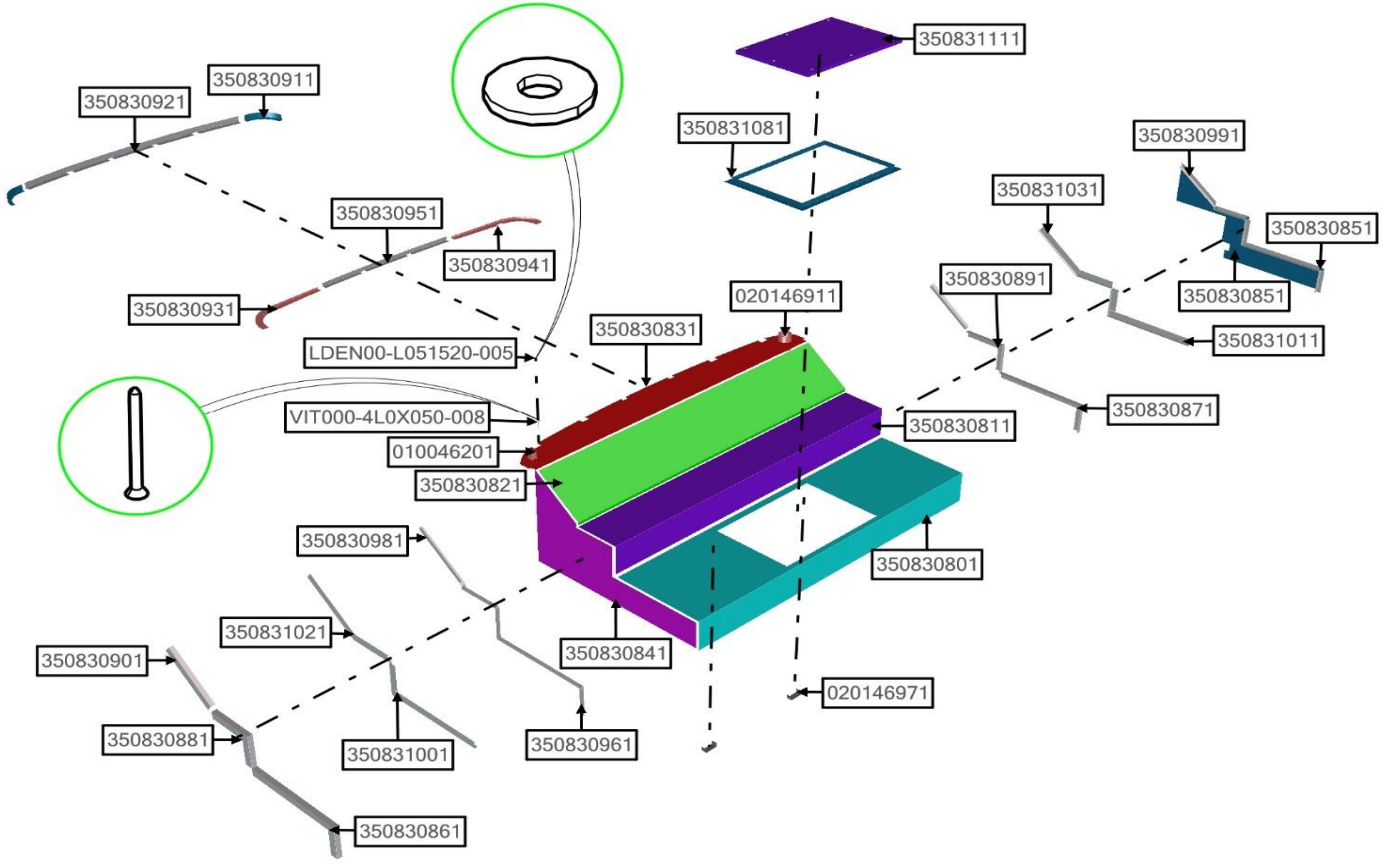


| ASSB_NAME | PART NO. | NAME | QTY |
|---|---|---|---|
| STEEL SHEET | 010046201 | SQUARE PIPE 40x40x2t | 1 |
| | 020146911 | PIPE Ø90 | 1 |
| | 020146971 | BRACKET | 2 |
| | 350830801 | STEEL SHEET 01 | 1 |
| | 350830811 | STEEL SHEET 02 | 1 |
| | 350830821 | STEEL SHEET 03 | 1 |
| | 350830831 | STEEL SHEET 04 | 1 |
| | 350830841 | STEEL SHEET 05 | 1 |

| ASSB_NAME | PART NO. | NAME | QTY |
|---|---|---|---|
| STEEL SHEET | 350830851 | STEEL SHEET 06 | 1 |
| | 350830861 | RH STEEL SHEET 07 | 1 |
| | 350830871 | LH STEEL SHEET 07 | 1 |
| | 350830881 | RH STEEL SHEET 08 | 1 |
| | 350830891 | LH STEEL SHEET 08 | 1 |
| | 350830901 | STEEL SHEET 09 | 2 |
| | 350830911 | STEEL SHEET 10 | 2 |
| | 350830921 | STEEL SHEET 11 | 1 |

| ASSB_NAME | PART NO. | NAME | QTY |
|---|---|---|---|
| | 350830931 | RH STEEL SHEET 12 | 1 |
| | 350830941 | LH STEEL SHEET 12 | 1 |
| | 350830951 | STEEL SHEET 13 | 1 |
| | 350830961 | RH STEEL SHEET 14 | 1 |
| | 350830971 | LH STEEL SHEET 14 | 1 |
| | 350830981 | RH STEEL SHEET 15 | 1 |
| | 350830991 | LH STEEL SHEET 15 | 1 |
| | 350831001 | RH STEEL SHEET 16 | 1 |
| | 350831011 | LH STEEL SHEET 16 | 1 |
| | 350831021 | RH STEEL SHEET 17 | 1 |
| | 350831031 | LH STEEL SHEET 17 | 1 |
| | 350831081 | NOISE REDUCTION FRAME | 1 |
| | 350831111 | NOISE REDUCTION COVER ASSY | 1 |
| | LDEN00-L051520-005 | WASHER Ø5xØ15x2.0 | 1 |
| | VIT000-4L0X050-008 | SCREW M4x50 | 1 |
| | | | |
| STEEL SHEET | | | |
| | | | |
| | | | |
| | | | |
| | | | |
| | | | |
| | | | |
| | | | |
| | | | |
| | | | |
| | | | |
| | | | |
| | | | |
| | | | |
| | | | |
| | | | |
| | | | |

| ASSB_NAME | PART NO. | NAME | QTY |
|---|---|---|---|
| | | | |
| | | | |
| | | | |
| | | | |
| | | | |
| | | | |
| | | | |
| | | | |
| | | | |
| | | | |
| | | | |
| | | | |
| | | | |
| | | | |
| | | | |
| | | | |

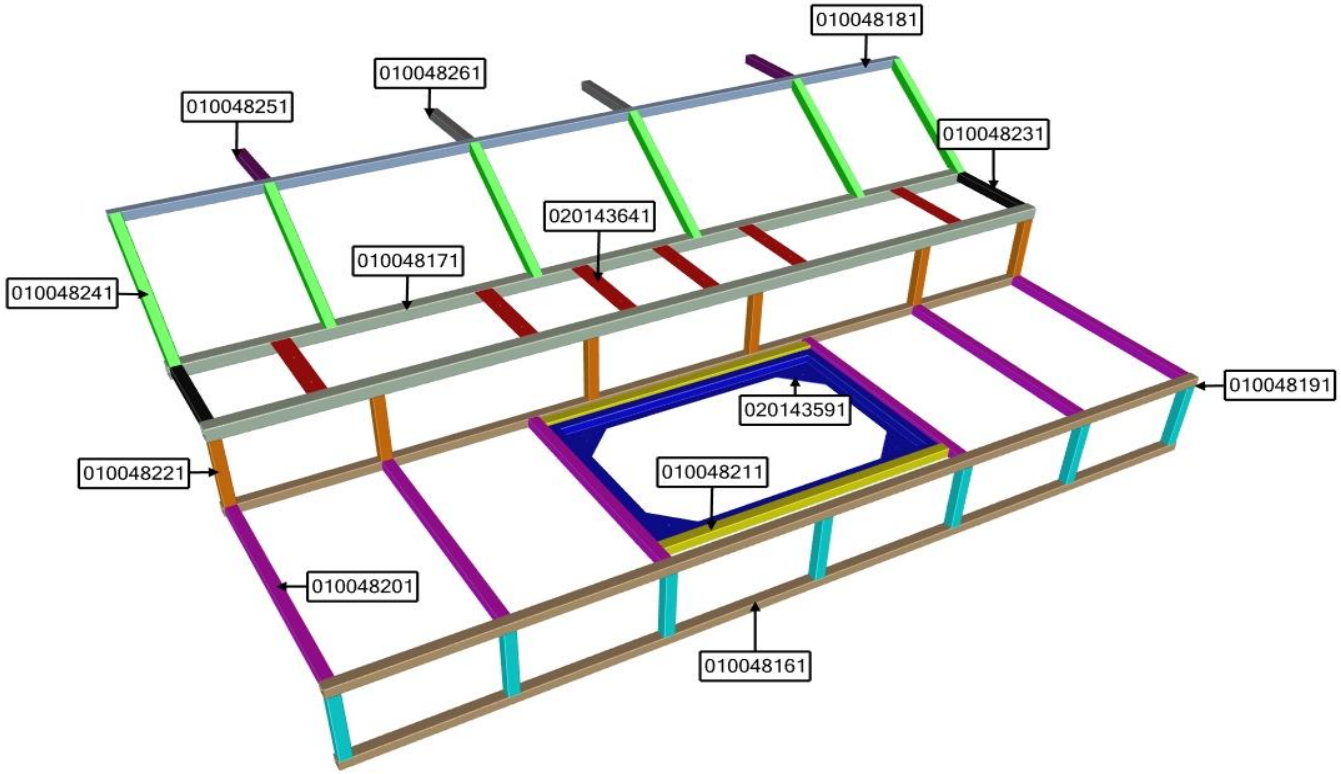


| ASSB_NAME | PART NO. | NAME | QTY |
|---|---|---|---|
| ENGINE FLOOR FRAME | 010048161 | SQUARE PIPE 01 | 3 |
| | 010048171 | SQUARE PIPE 02 | 2 |
| | 010048181 | SQUARE PIPE 03 | 1 |
| | 010048191 | SQUARE PIPE 04 | 7 |
| | 010048201 | SQUARE PIPE 05 | 6 |
| | 010048211 | SQUARE PIPE 06 | 2 |
| | 010048221 | SQUARE PIPE 07 | 6 |
| | 010048231 | SQUARE PIPE 08 | 2 |

| ASSB_NAME | PART NO. | NAME | QTY |
|---|---|---|---|
| ENGINE FLOOR FRAME | 010048241 | SQUARE PIPE 09 | 6 |
| | 010048251 | SQUARE PIPE 10 | 2 |
| | 010048261 | SQUARE PIPE 11 | 2 |
| | 020143591 | ENGINE CHECKING HATCHES | 1 |
| | 020143641 | BRACKET | 6 |
| | | | |
| | | | |
| | | | |

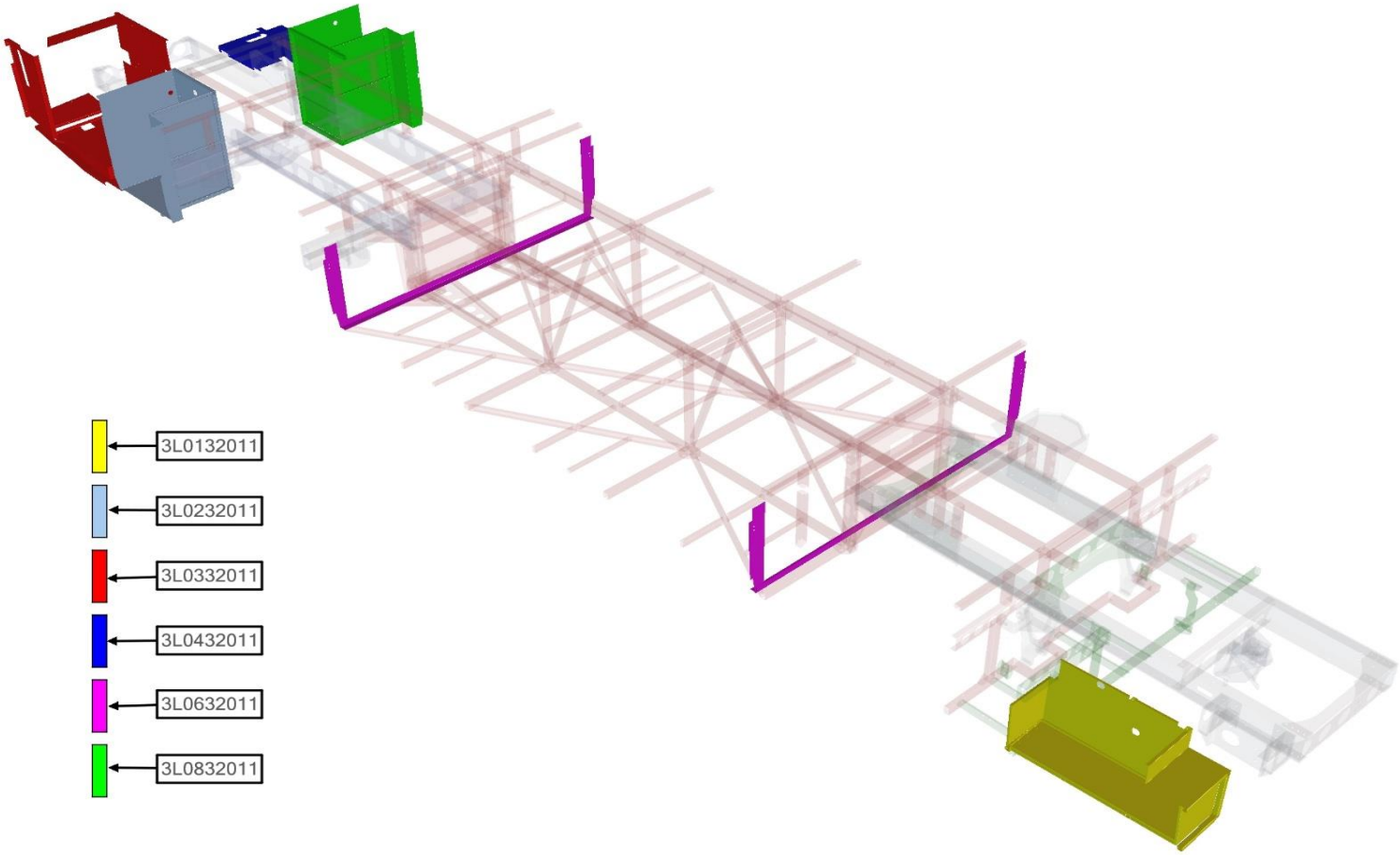


| ASSB_NAME | PART NO. | NAME | QTY |
|---|---|---|---|
| STEEL SHEET - ASSY | 3L0132011 | BATTERY COVER ASSY | 1 |
| | 3L0432011 | SCR TANK COVER ASSY | 1 |
| | 3L0832011 | UREA TANK COVER ASSY | 1 |
| | 3L0632011 | LUGGAGE COMPARTMENTS TOLE ASSY | 1 |
| | 3L0332011 | RADIATOR STEEL SHEET ASSY | 1 |
| | 3L0232011 | ELECTRICAL CABINET STEEL SHEET ASSY | 1 |
| | | | |
| | | | |

| ASSB_NAME | PART NO. | NAME | QTY |
|---|---|---|---|
| STEEL SHEET - ASSY | | | |
| | | | |
| | | | |
| | | | |
| | | | |
| | | | |
| | | | |
| | | | |

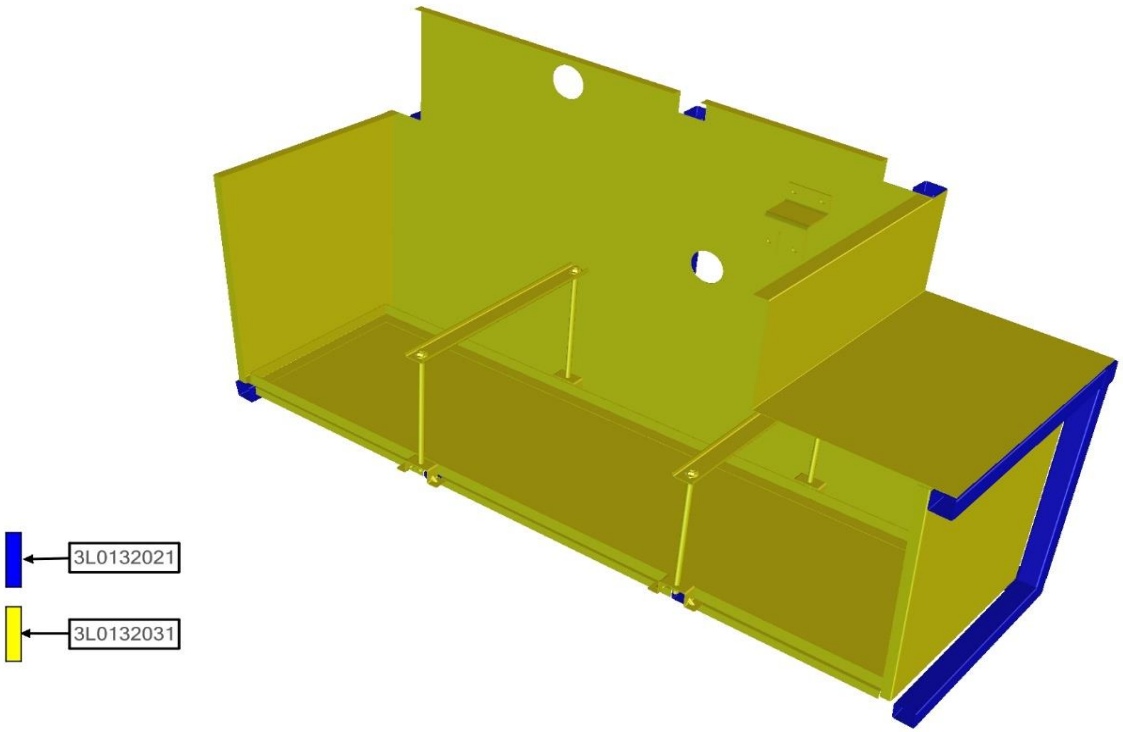


| ASSB_NAME | PART NO. | NAME | QTY |
|---|---|---|---|
| BATTERY COVER ASSY | 3L0132031 | BATTERY STEEL SHEET | 1 |
| | 3L0132021 | BATTERY FRAME | 1 |
| | | | |
| | | | |
| | | | |
| | | | |
| | | | |
| | | | |

| ASSB_NAME | PART NO. | NAME | QTY |
|---|---|---|---|
| BATTERY COVER ASSY | | | |
| | | | |
| | | | |
| | | | |
| | | | |
| | | | |
| | | | |
| | | | |

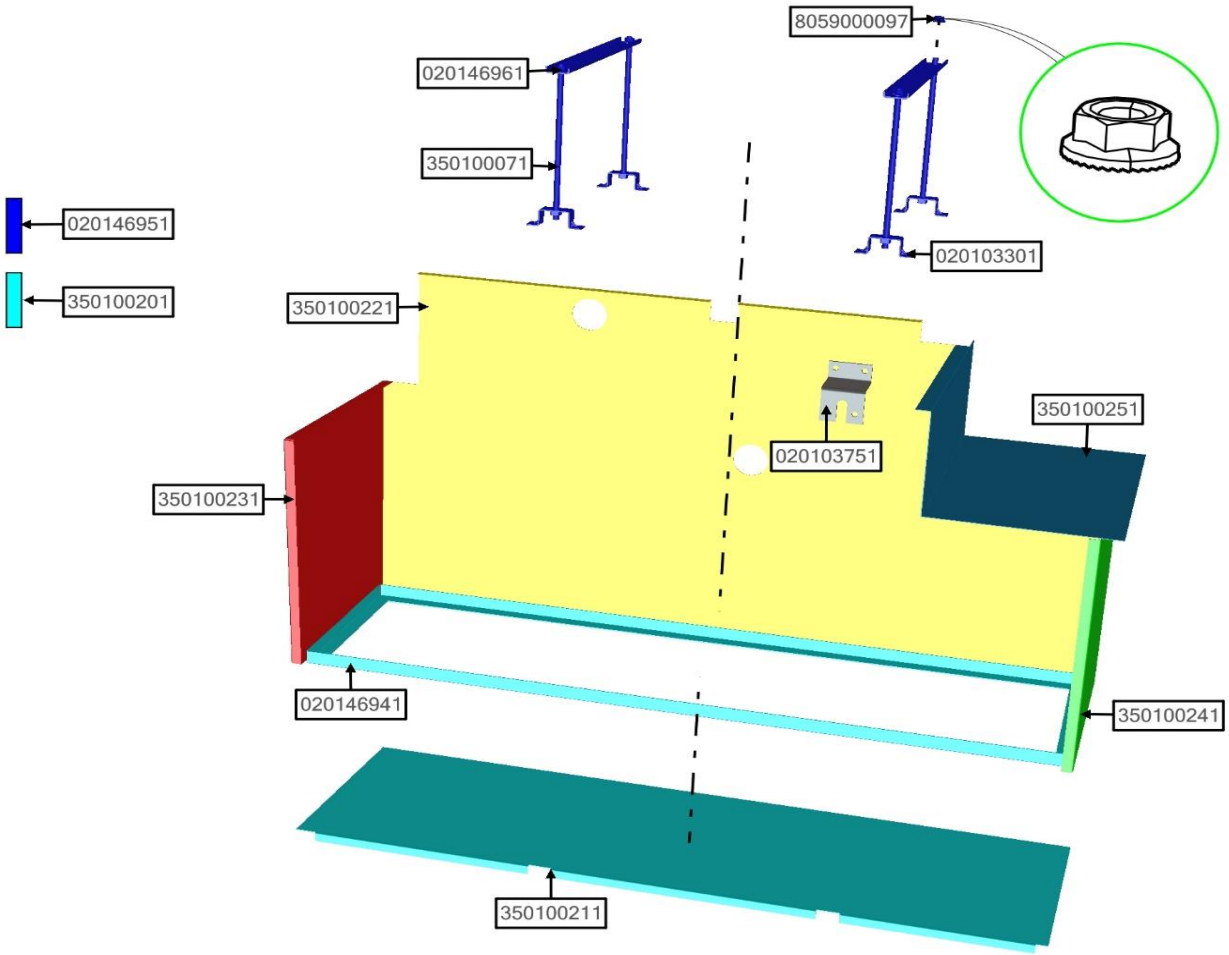


| ASSB_NAME | PART NO. | NAME | QTY |
|---|---|---|---|
| BATTERY STEEL SHEET | 020103301 | BRACKET | 4 |
| | 020103751 | BRACKET | 1 |
| | 020146941 | BRACKET ASSY | 1 |
| | 020146951 | BALANCE BAR ASSY | 1 |
| | 020146961 | BALANCE BAR | 2 |
| | 350100071 | BOLT | 4 |
| | 350100201 | ELECTRICAL CABINET STEEL SHEET ASSY ( | 1 |
| | 350100211 | BATTERY STEEL SHEET 01 | 1 |

| ASSB_NAME | PART NO. | NAME | QTY |
|---|---|---|---|
| BATTERY STEEL SHEET | 350100221 | BATTERY STEEL SHEET 02 | 1 |
| | 350100231 | BATTERY STEEL SHEET 03 | 1 |
| | 350100241 | BATTERY STEEL SHEET 04 | 1 |
| | 350100251 | BATTERY STEEL SHEET 05 | 1 |
| | 8059000097 | NUT 08125 | 4 |
| | | | |
| | | | |
| | | | |

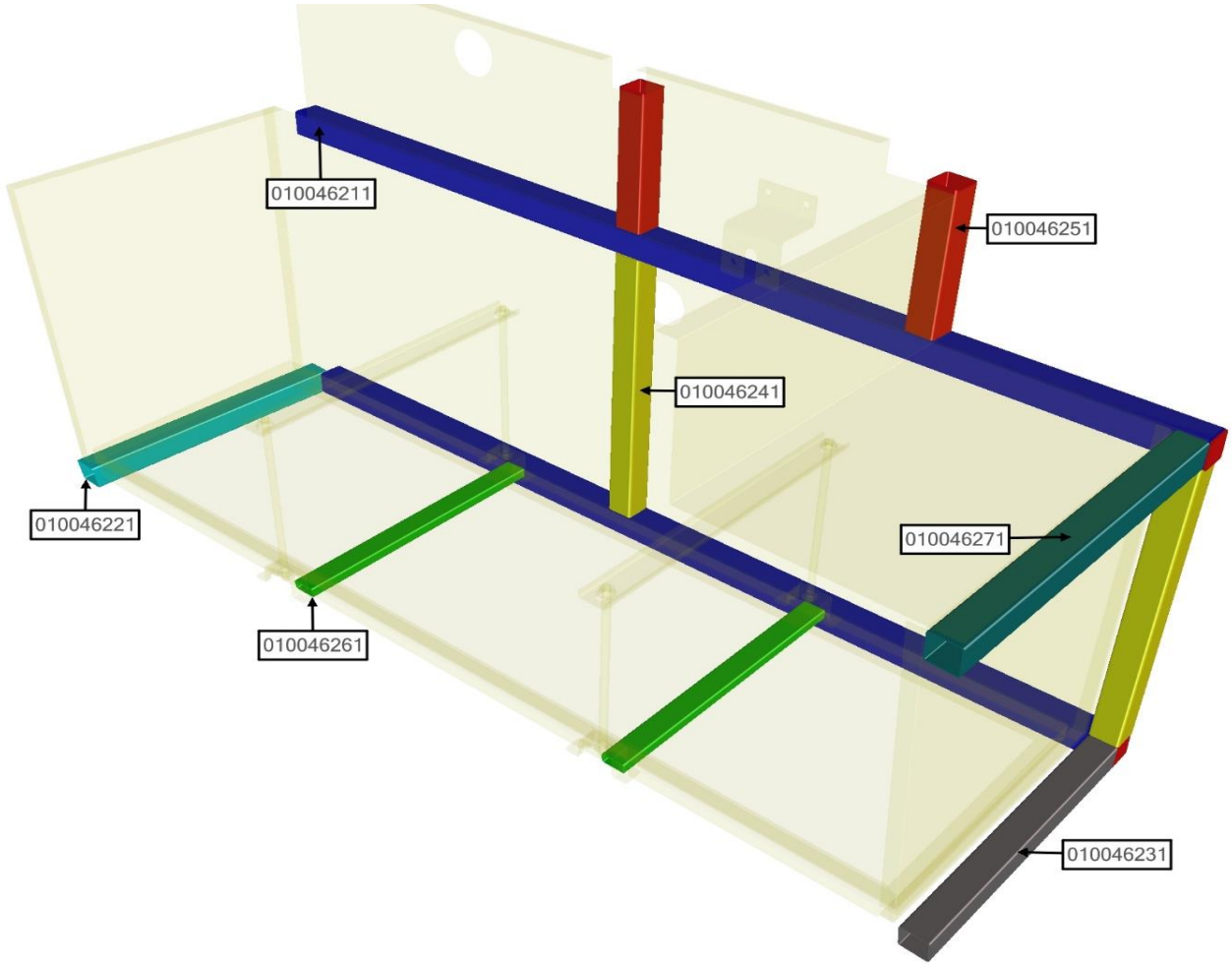


| ASSB_NAME | PART NO. | NAME | QTY |
|---|---|---|---|
| BATTERY FRAME | 010046211 | SQUARE PIPE 01 | 2 |
| | 010046221 | SQUARE PIPE 02 | 1 |
| | 010046231 | SQUARE PIPE 03 | 1 |
| | 010046241 | SQUARE PIPE 04 | 2 |
| | 010046251 | SQUARE PIPE 05 | 2 |
| | 010046261 | SQUARE PIPE 06 | 2 |
| | 010046271 | SQUARE PIPE 07 | 1 |
| | | | |

| ASSB_NAME | PART NO. | NAME | QTY |
|---|---|---|---|
| BATTERY FRAME | | | |
| | | | |
| | | | |
| | | | |
| | | | |
| | | | |
| | | | |
| | | | |

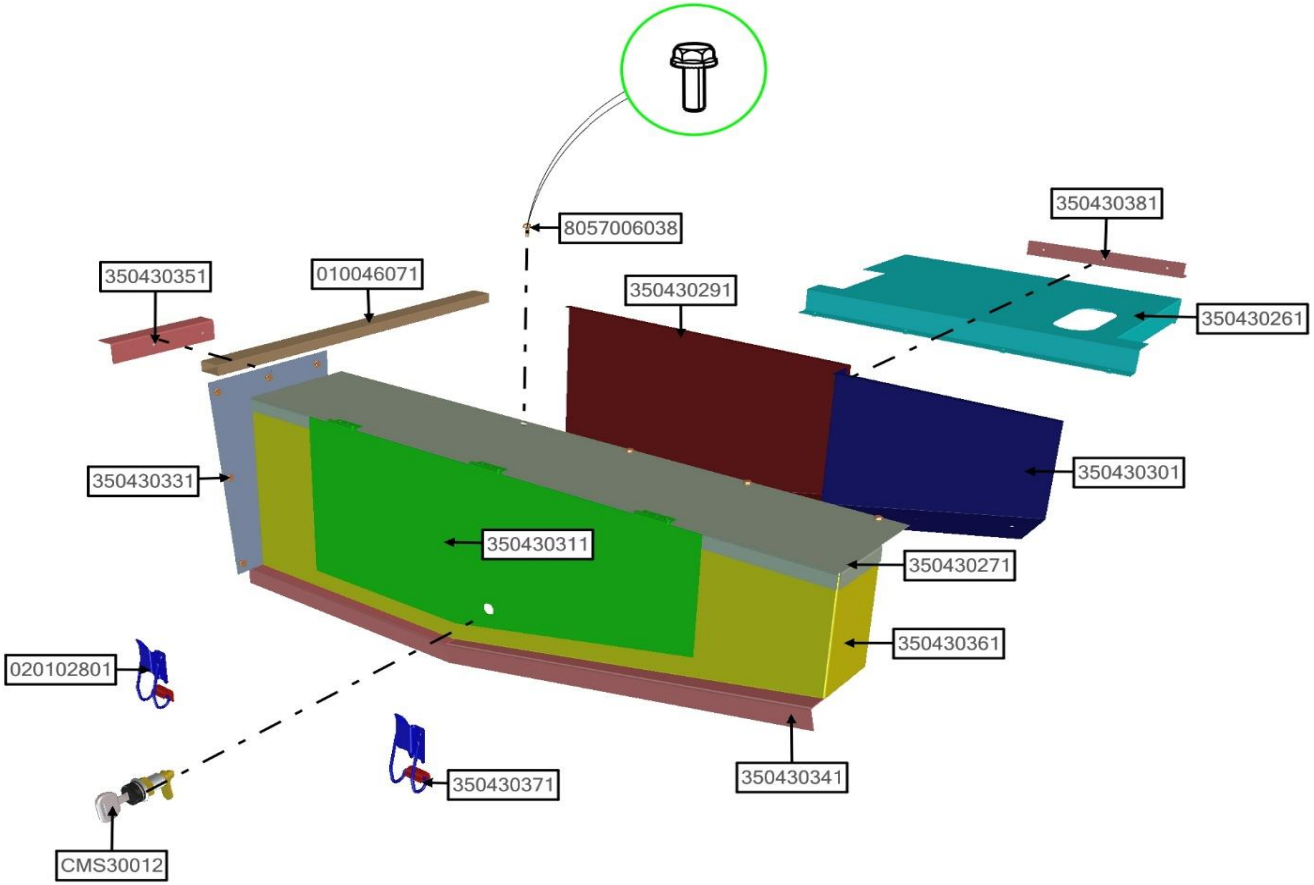


| ASSB_NAME | PART NO. | NAME | QTY |
|---|---|---|---|
| SCR TANK COVER ASSY | 010046071 | AIR TANK FRAME | 1 |
| | 020102801 | HAND CRANK KEYCHAINS | 2 |
| | 350430261 | AIR TANK STEEL SHEET | 1 |
| | 350430271 | STEEL SHEET 01 | 1 |
| | 350430291 | STEEL SHEET 03 | 1 |
| | 350430301 | STEEL SHEET 04 | 1 |
| | 350430311 | STEEL SHEET 05 | 1 |
| | 350430331 | STEEL SHEET 06 | 1 |

| ASSB_NAME | PART NO. | NAME | QTY |
|---|---|---|---|
| SCR TANK COVER ASSY | 350430341 | BRACKET | 1 |
| | 350430351 | BRACKET | 1 |
| | 350430361 | STEEL SHEET 02 | 1 |
| | 350430371 | TOOLBOX KEYCHAINS | 2 |
| | 350430381 | BRACKET | 1 |
| | 8057006038 | BOLT 06015100 | 17 |
| | CMS30012 | LOCK - ASSY | 1 |
| | | | |

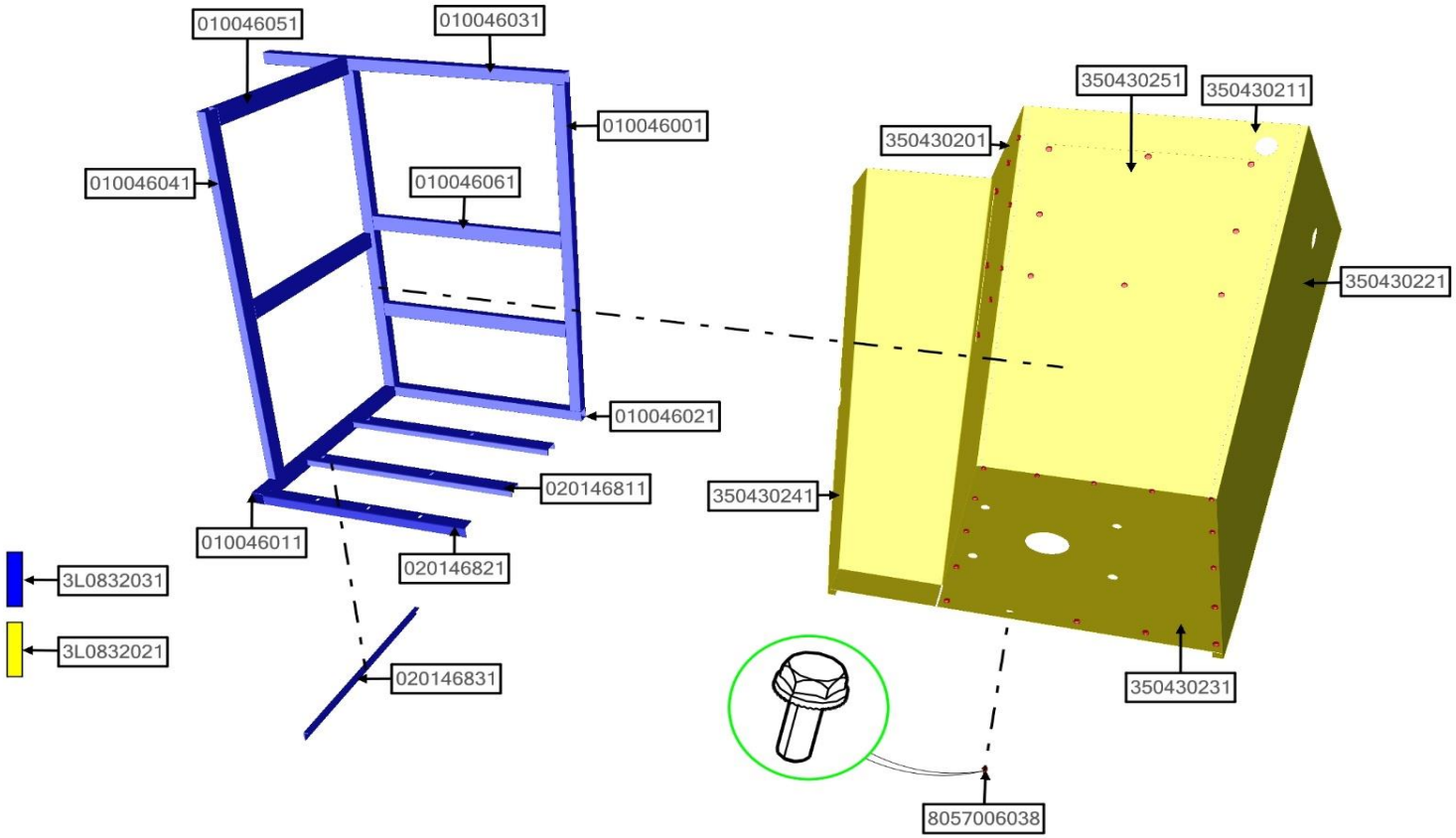


| ASSB_NAME | PART NO. | NAME | QTY |
|---|---|---|---|
| UREA TANK COVER ASSY | 3L0832021 | UREA TANK STEEL SHEET | 1 |
| | 3L0832031 | UREA TANK FRAME | 1 |
| | 010046001 | UREA TANK FRAME 01 | 2 |
| | 010046011 | UREA TANK FRAME 02 | 1 |
| | 010046021 | UREA TANK FRAME 03 | 1 |
| | 010046031 | UREA TANK FRAME 04 | 1 |
| | 010046041 | UREA TANK FRAME 05 | 1 |
| | 010046051 | UREA TANK FRAME 06 | 2 |

| ASSB_NAME | PART NO. | NAME | QTY |
|---|---|---|---|
| UREA TANK COVER ASSY | 010046061 | UREA TANK FRAME 07 | 2 |
| | 020146811 | BRACKET | 2 |
| | 020146821 | BRACKET | 1 |
| | 020146831 | BRACKET | 1 |
| | 350430201 | UREA TANK STEEL SHEET 01 | 1 |
| | 350430211 | UREA TANK STEEL SHEET 02 | 1 |
| | 350430221 | UREA TANK STEEL SHEET 03 | 1 |
| | 350430231 | UREA TANK STEEL SHEET 04 | 1 |

| ASSB_NAME | PART NO. | NAME | QTY |
|---|---|---|---|
| UREA TANK COVER ASSY | 350430241 | UREA TANK STEEL SHEET 05 | 1 |
| | 350430251 | HATCHES DOOR | 2 |
| | 8057006038 | BOLT 06015100 | 32 |

| ASSB_NAME | PART NO. | NAME | QTY |
|---|---|---|---|
| UREA TANK COVER ASSY | | | |

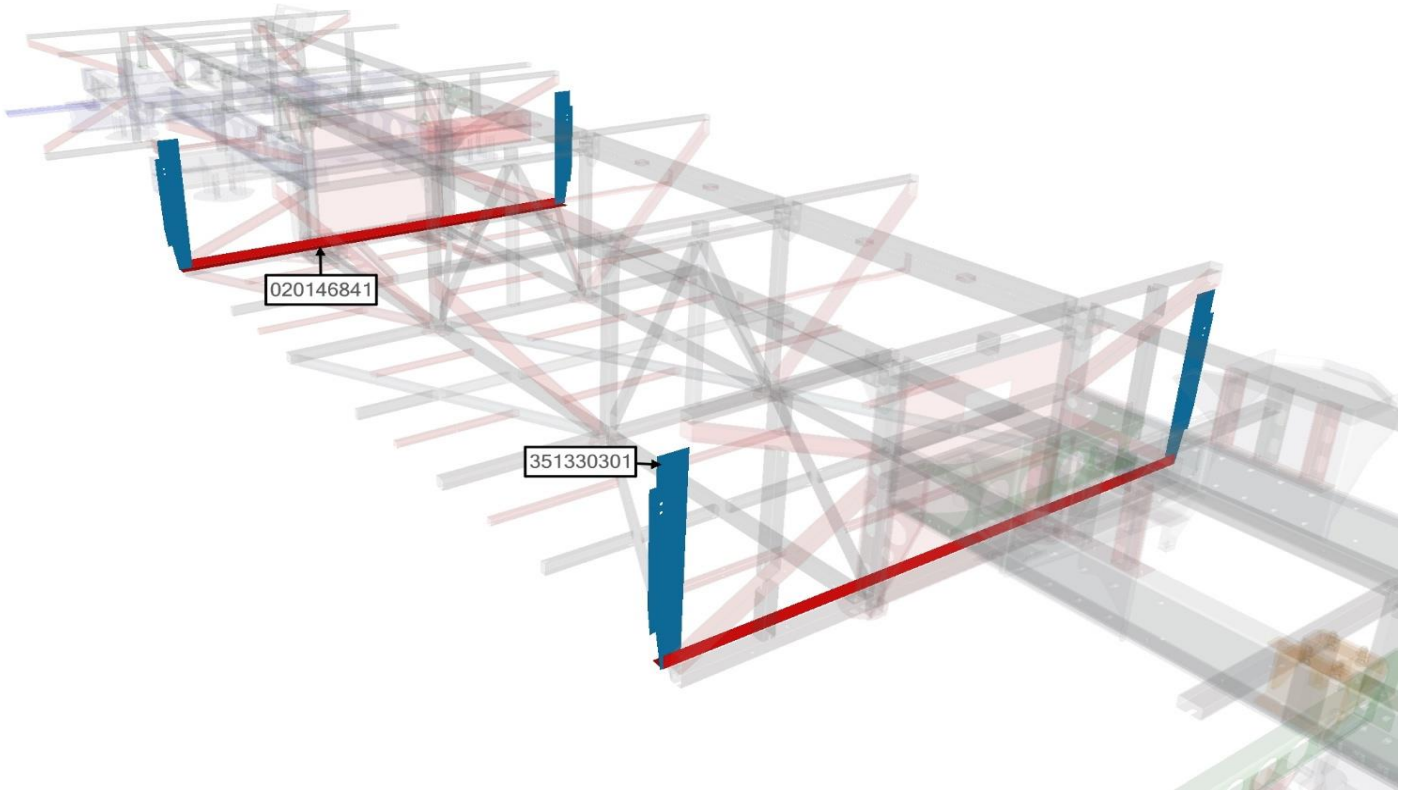


| ASSB_NAME | PART NO. | NAME | QTY |
|---|---|---|---|
| LUGGAGE COMPARTMENTS TOLE ASSY | 020146841 | BRACKET | 2 |
| | 351330301 | LUGGAGE COMPARTMENTS TOLE 01 | 4 |
| | | | |
| | | | |
| | | | |
| | | | |
| | | | |
| | | | |

| ASSB_NAME | PART NO. | NAME | QTY |
|---|---|---|---|
| LUGGAGE COMPARTMENTS TOLE ASSY | | | |
| | | | |
| | | | |
| | | | |
| | | | |
| | | | |
| | | | |
| | | | |

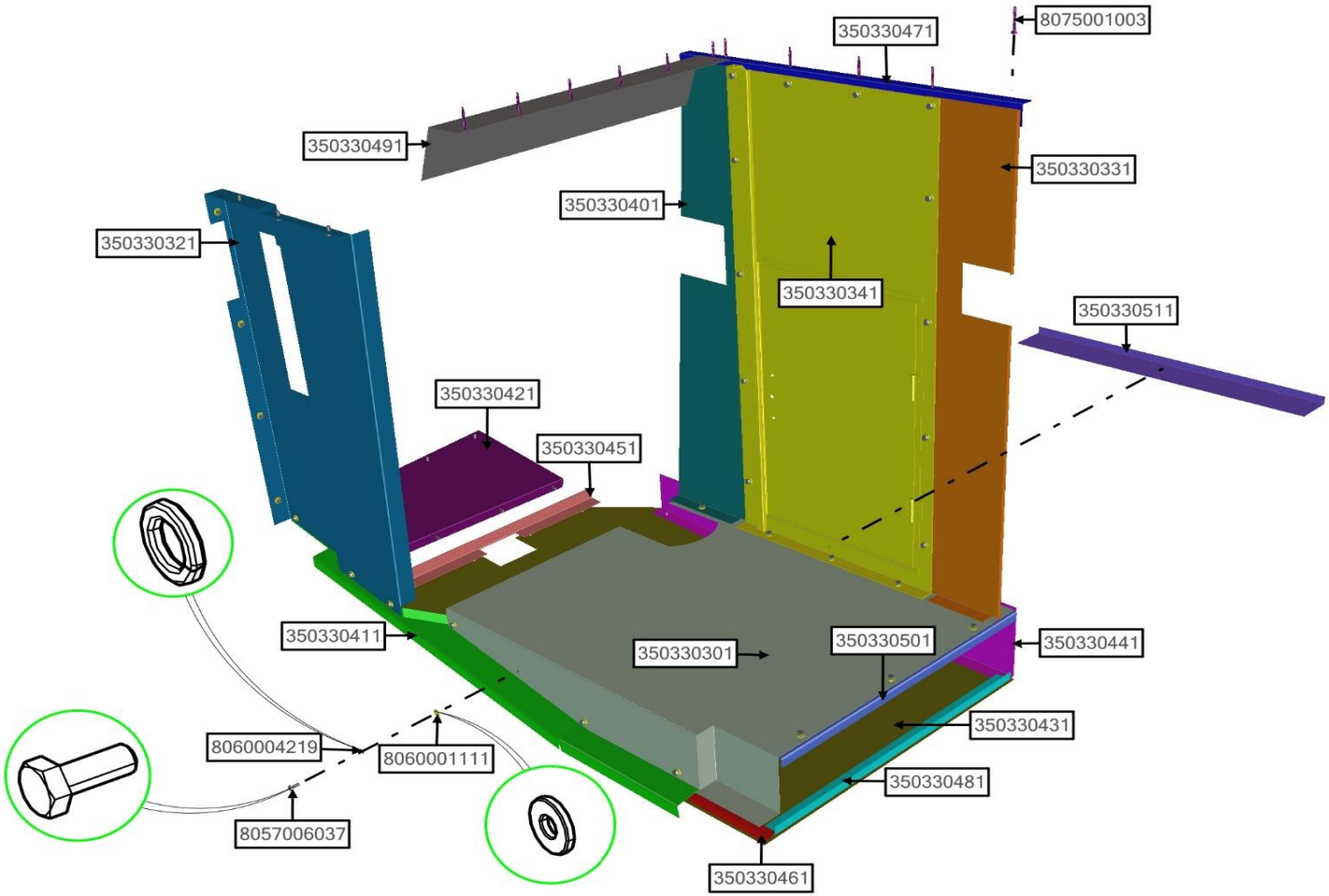


| ASSB_NAME | PART NO. | NAME | QTY |
|---|---|---|---|
| RADIATOR STEEL SHEET ASSY | 350330301 | RADIATOR STEEL SHEET 01 | 1 |
| | 350330321 | RADIATOR STEEL SHEET 02 | 1 |
| | 350330331 | RADIATOR STEEL SHEET 03 | 1 |
| | 350330341 | RADIATOR STEEL SHEET 04 | 1 |
| | 350330401 | RADIATOR STEEL SHEET 05 | 1 |
| | 350330411 | RADIATOR STEEL SHEET 06 | 1 |
| | 350330421 | RADIATOR STEEL SHEET 07 | 1 |
| | 350330431 | RADIATOR STEEL SHEET 08 | 1 |

| ASSB_NAME | PART NO. | NAME | QTY |
|---|---|---|---|
| RADIATOR STEEL SHEET ASSY | 350330441 | RADIATOR STEEL SHEET 09 | 1 |
| | 350330451 | RADIATOR STEEL SHEET 10 | 1 |
| | 350330461 | RADIATOR STEEL SHEET 11 | 1 |
| | 350330471 | RADIATOR STEEL SHEET 12 | 1 |
| | 350330481 | RADIATOR STEEL SHEET 13 | 1 |
| | 350330491 | RADIATOR STEEL SHEET 14 | 1 |
| | 350330501 | RADIATOR STEEL SHEET 15 | 1 |
| | 350330511 | RADIATOR STEEL SHEET 16 | 1 |

| ASSB_NAME | PART NO. | NAME | QTY |
|---|---|---|---|
| RADIATOR STEEL SHEET ASSY | 8057006037 | BOLT 06015100 | 62 |
| | 8060001111 | WASHER Ø06 | 62 |
| | 8060004219 | SPLIT WASHER Ø06 | 62 |
| | 8075001003 | SCREW 0545 | 11 |

| ASSB_NAME | PART NO. | NAME | QTY |
|---|---|---|---|
| RADIATOR STEEL SHEET ASSY | | | |

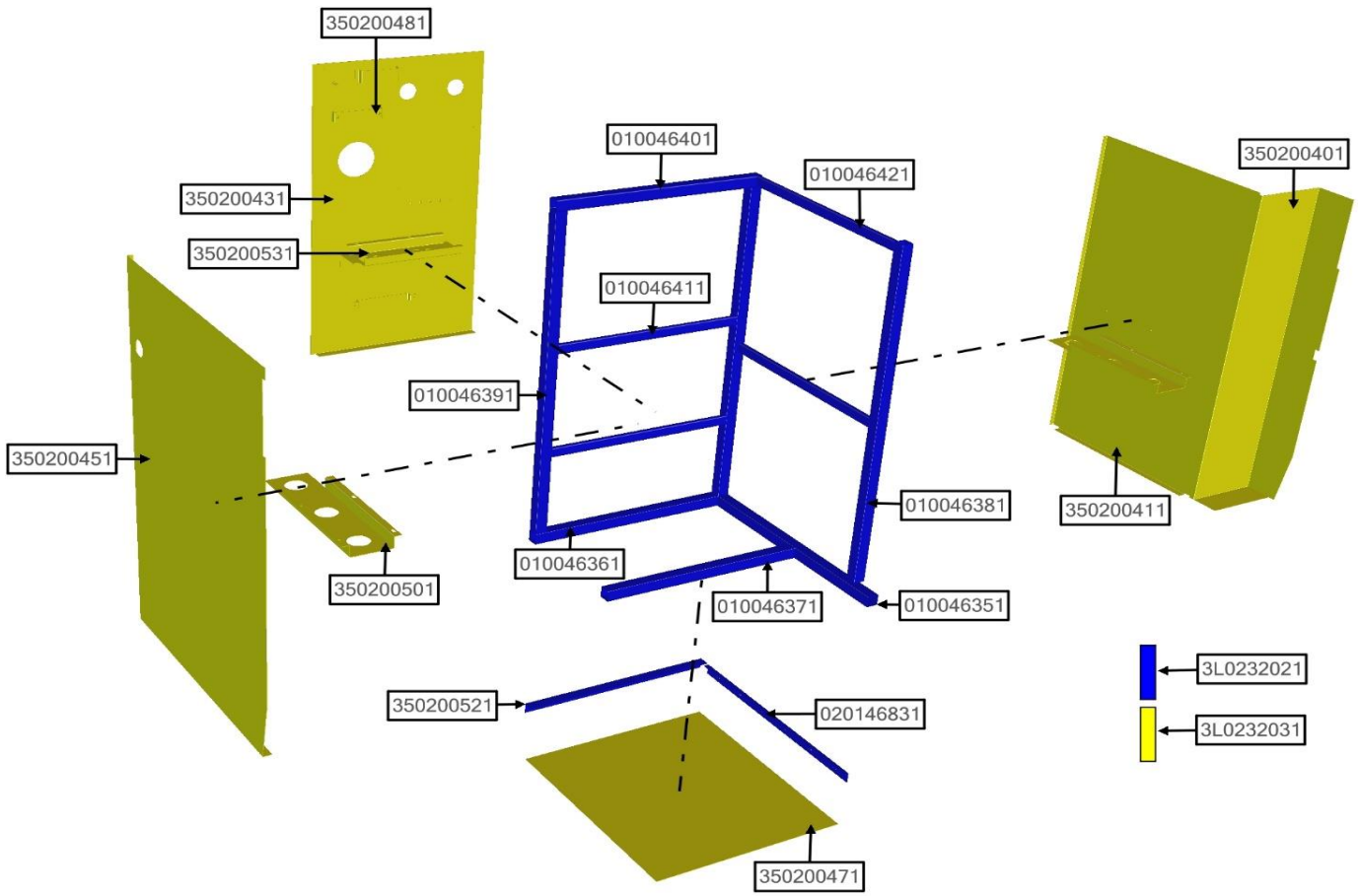


| ASSB_NAME | PART NO. | NAME | QTY |
|---|---|---|---|
| ELECTRICAL CABINET STEEL SHEET ASSY | 3L0232021 | ELECTRIC FRAME - ASSY | 1 |
| | 3L0232031 | ELECTRICAL CABINET STEEL SHEET | 1 |
| | 010046351 | SQUARE PIPE 01 | 1 |
| | 010046361 | SQUARE PIPE 02 | 1 |
| | 010046371 | SQUARE PIPE 03 | 1 |
| | 010046381 | SQUARE PIPE 04 | 1 |
| | 010046391 | SQUARE PIPE 05 | 2 |
| | 010046401 | SQUARE PIPE 06 | 1 |

| ASSB_NAME | PART NO. | NAME | QTY |
|---|---|---|---|
| ELECTRICAL CABINET STEEL SHEET ASSY | 010046411 | SQUARE PIPE 07 | 2 |
| | 010046421 | SQUARE PIPE 08 | 2 |
| | 020146831 | BRACKET | 1 |
| | 350200401 | ELECTRICAL CABINET STEEL SHEET 01 | 1 |
| | 350200411 | ELECTRICAL CABINET STEEL SHEET 02 | 1 |
| | 350200431 | ELECTRICAL CABINET STEEL SHEET 03 | 1 |
| | 350200451 | ELECTRICAL CABINET STEEL SHEET 04 | 1 |
| | 350200471 | ELECTRICAL CABINET STEEL SHEET 05 | 1 |

| ASSB_NAME | PART NO. | NAME | QTY |
|---|---|---|---|
| ELECTRICAL CABINET STEEL SHEET ASSY | 350200481 | ELECTRICAL CABINET STEEL SHEET 06 | 1 |
| | 350200501 | ELECTRICAL DUCT 01 | 2 |
| | 350200521 | BRACKET | 1 |
| | 350200531 | ELECTRICAL DUCT 02 | 1 |

| ASSB_NAME | PART NO. | NAME | QTY |
|---|---|---|---|
| ELECTRICAL CABINET STEEL SHEET ASSY | | | |

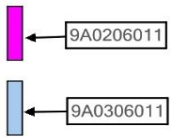


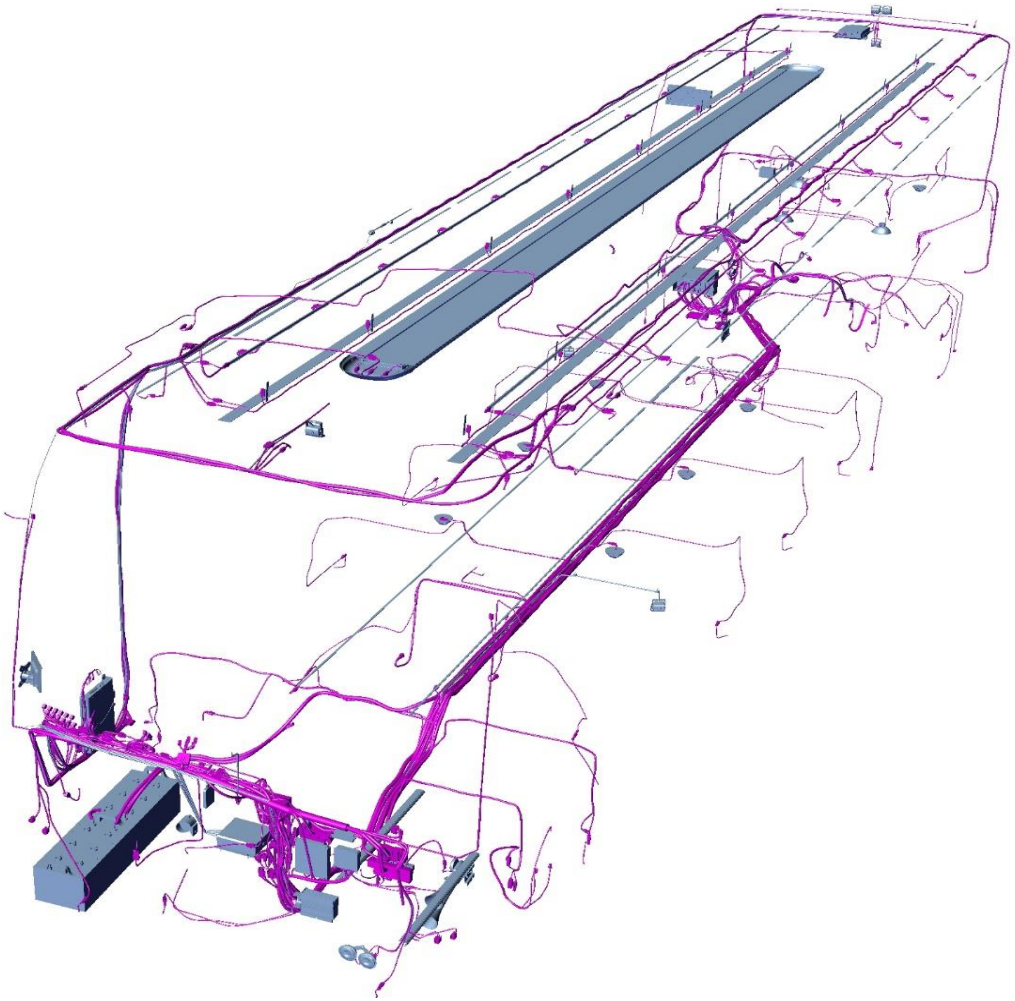

| ASSB_NAME | PART NO. | NAME | QTY |
|---|---|---|---|
| ELECTRIC SYSTEM | 9A0206011 | CONDUCTOR WIRE SYSTEM | 1 |
| | 9A0306011 | ELECTRICAL DEVICE | 1 |
| | | | |
| | | | |
| | | | |
| | | | |
| | | | |

| ASSB_NAME | PART NO. | NAME | QTY |
|---|---|---|---|
| ELECTRIC SYSTEM | | | |
| | | | |
| | | | |
| | | | |
| | | | |
| | | | |
| | | | |

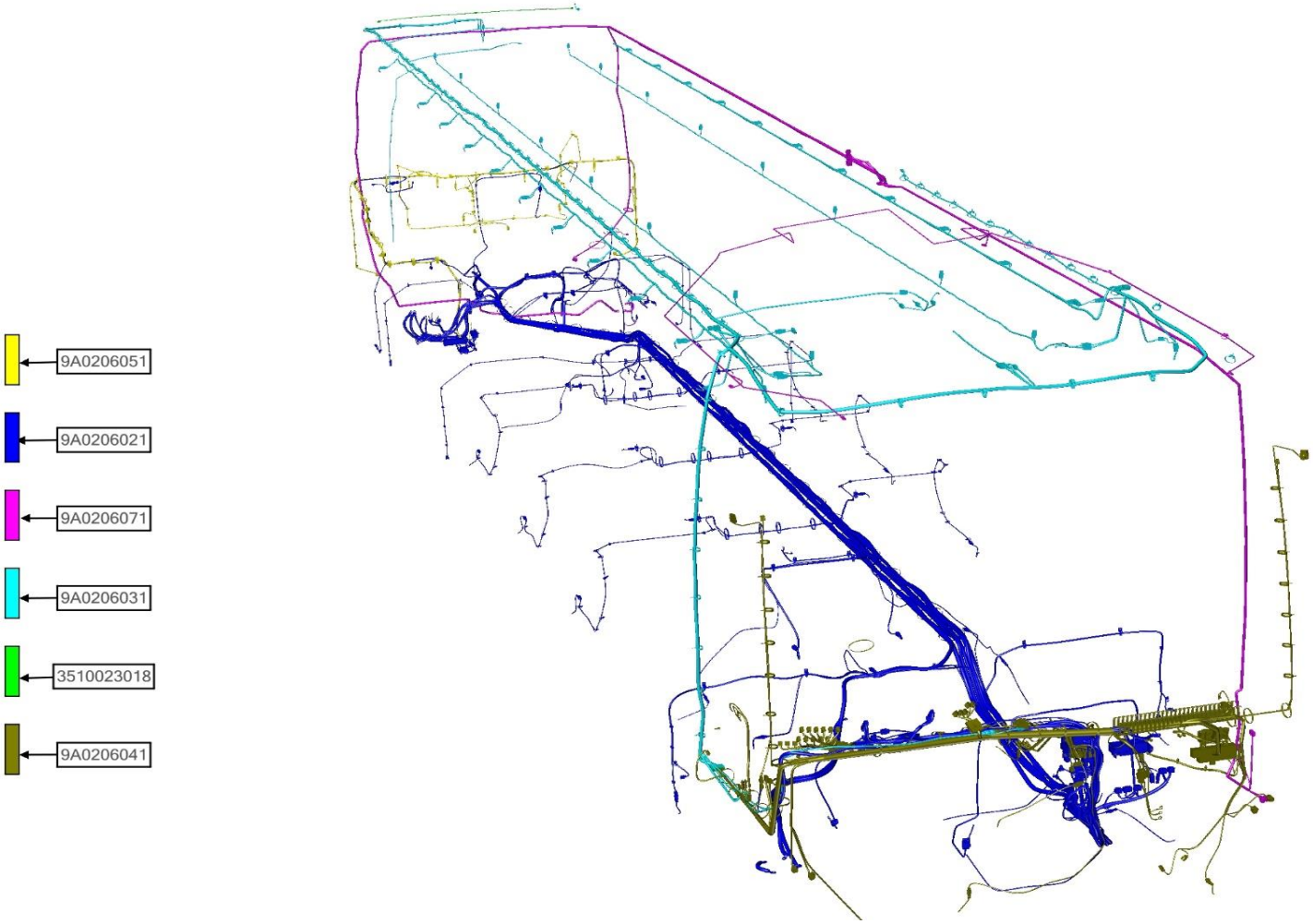


| ASSB_NAME | PART NO. | NAME | QTY |
|---|---|---|---|
| CONDUCTOR WIRE SYSTEM | 9A0206071 | A/C ELECTRICAL HARNESS | 1 |
| | 9A0206021 | CHASSIS ELECTRICAL HARNESS - ASSY | 1 |
| | 9A0206031 | HEADLINING ELECTRICAL HARNESS - ASSY | 1 |
| | 9A0206061 | SPOILER ELECTRICAL HARNESS | 1 |
| | 9A0206041 | DASHBOARD ELECTRICAL HARNESS - ASSY | 1 |
| | 9A0206051 | REAR ELECTRICAL HARNESS - ASSY | 1 |
| | 3510023018 | REAR SPOILER WIRE | 1 |

| ASSB_NAME | PART NO. | NAME | QTY |
|---|---|---|---|
| CONDUCTOR WIRE SYSTEM | | | |
| | | | |
| | | | |
| | | | |
| | | | |
| | | | |
| | | | |

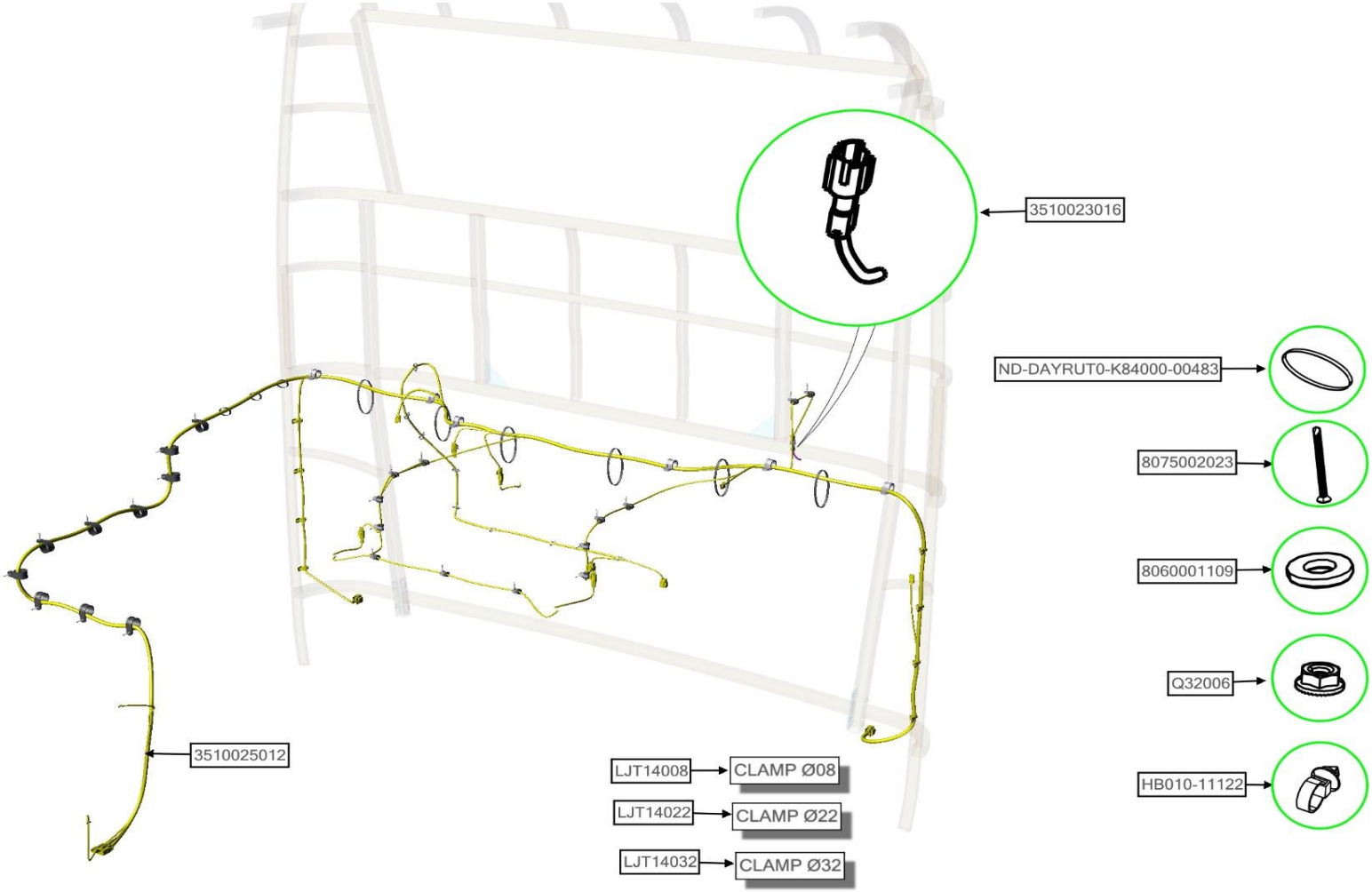


| ASSB_NAME | PART NO. | NAME | QTY |
|---|---|---|---|
| REAR ELECTRICAL HARNESS - ASSY | 3510025012 | REAR ELECTRICAL HARNESS - ASSY | 1 |
| | HB010-11122 | CLIP | 8 |
| | ND-DAYRUT0-K84000-00483 | CABLE TIE 08400 | 9 |
| | 3510023016 | ENGINE FLAP SWITCH WIRE | 1 |
| | 8075002023 | CREW 0435 | 23 |
| | LJT14008 | CLAMP Ø08 | 13 |
| | LJT14022 | CLAMP Ø22 | 6 |

| ASSB_NAME | PART NO. | NAME | QTY |
|---|---|---|---|
| REAR ELECTRICAL HARNESS - ASSY | LJT14032 | CLAIM Ø32 | 10 |
| | 8060001109 | WAVE SPRING WASHER | 1 |
| | Q32006 | NUT | 1 |
| | | | |
| | | | |
| | | | |
| | | | |

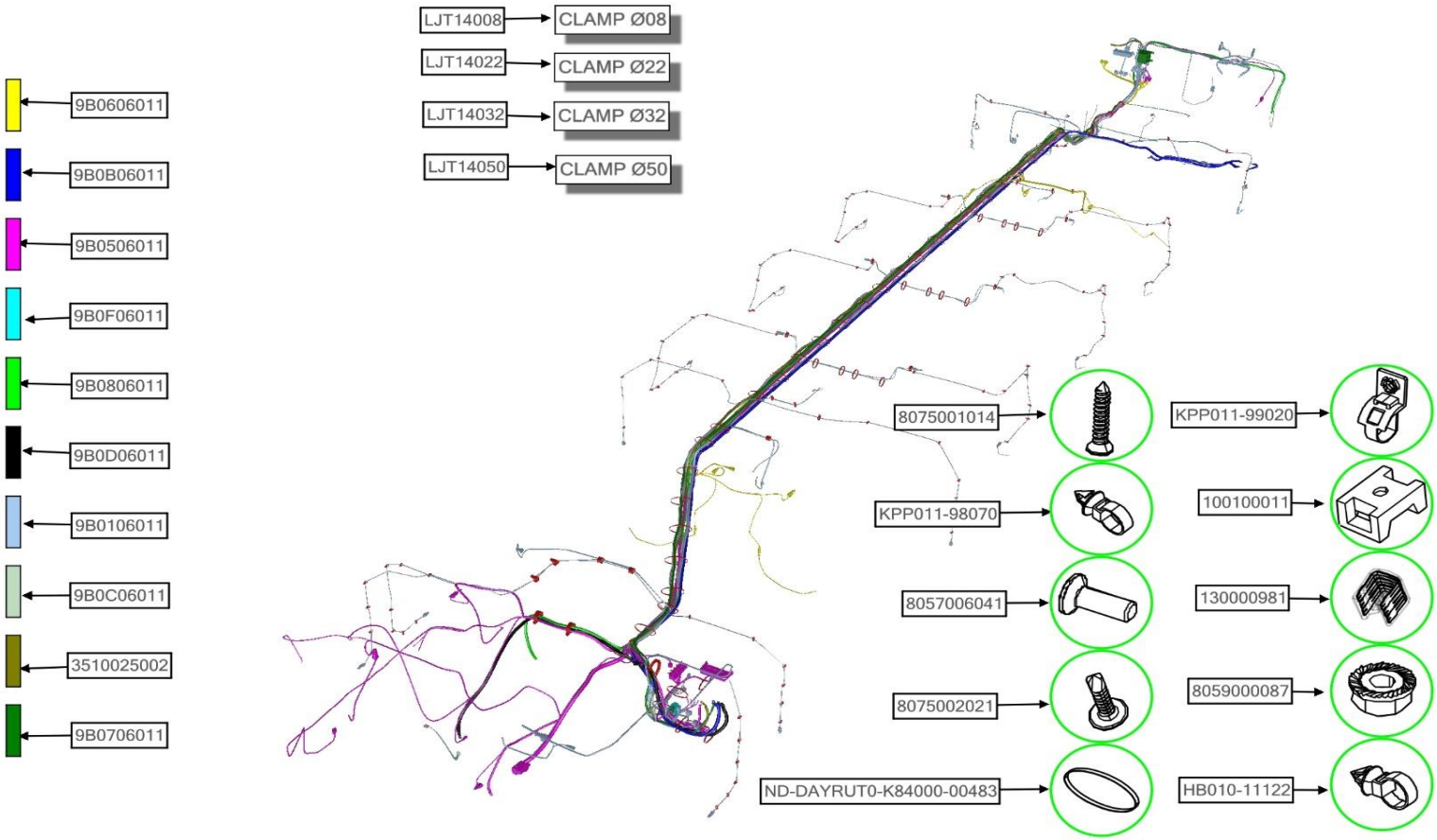


| ASSB_NAME | PART NO. | NAME | QTY |
|---|---|---|---|
| CHASSIS ELECTRICAL HARNESS - ASSY | 805700604 | BOLT 06020100 | 16 |
| | HB010-11122 | CLIP | 56 |
| | KPP011-98070 | CLIP | 14 |
| | KPP011-99020 | CLIP | 37 |
| | ND-DAYRUT0-K84000-00483 | CABLE TIE 08400 | 51 |
| | 9B0606011 | ABS WIRE | 1 |
| | 9B0F06011 | ENGINE ELECTRIC CONTROL UNIT WIR | 1 |

| ASSB_NAME | PART NO. | NAME | QTY |
|---|---|---|---|
| CHASSIS ELECTRICAL HARNESS - ASSY | 9B0806011 | TRANSMISSION WIRE | 1 |
| | 9B0106011 | CHASSIS WIRE | 1 |
| | 9B0D06011 | STARTOR WIRE | 1 |
| | 9B0C06011 | MASS ENGINE WIRE | 1 |
| | 3510025002 | DASHBOARD POWER WIRE | 1 |
| | 9B0706011 | HYDRAULIC BRAKE WIRE | 1 |
| | 9B0506011 | ENGINE WIRE | 1 |

| ASSB_NAME | PART NO. | NAME | QTY |
|---|---|---|---|
| REAR FLAP ASSY | 9B0B06011 | BATTERY WIRE | 1 |
| | 130000981 | WEATHERSTRIP | 19 |
| | 8075001014 | CREW 0420 | 6 |
| | 8075002021 | CREW 0420 | 3 |
| | LJT14008 | CLAMP Ø08 | 3 |
| | LJT14022 | CLAMP Ø22 | 3 |
| | LJT14032 | CLAMP Ø32 | 2 |
| | LJT14050 | CLAMP Ø50 | 4 |
| | 8059000087 | NUT 06100 | 7 |
| | 100100011 | MOUNTING | 6 |

| ASSB_NAME | PART NO. | NAME | QTY |
|---|---|---|---|
| REAR FLAP ASSY | | | |

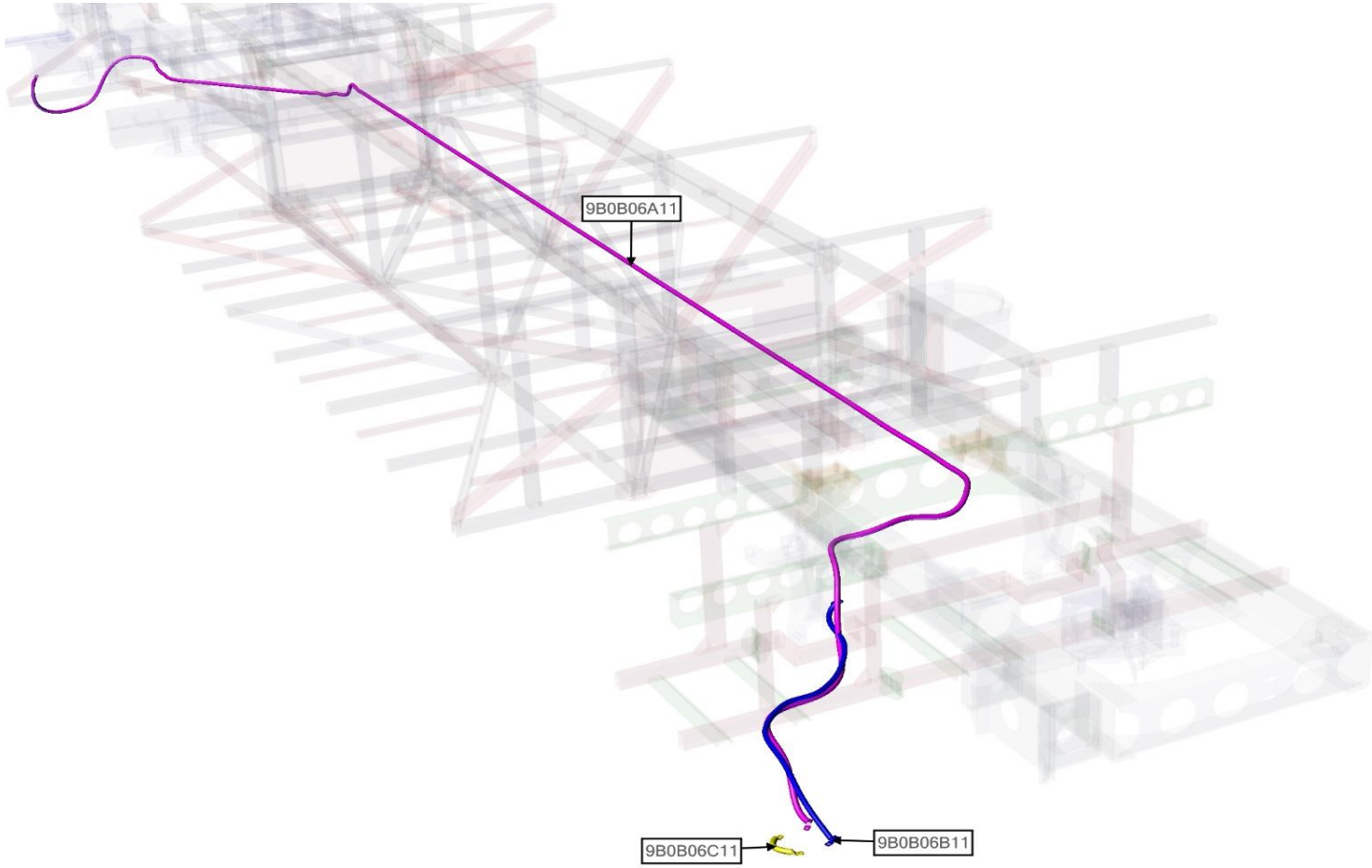


| ASSB_NAME | PART NO. | NAME | QTY |
|---|---|---|---|
| BATTERY WIRE | 9B0B06C11 | CONNECTING WIRE | 1 |
| | 9B0B06A11 | BATTERY POWER WIRE | 1 |
| | 9B0B06B11 | WIRE MASS | 1 |
| | | | |
| | | | |
| | | | |
| | | | |

| ASSB_NAME | PART NO. | NAME | QTY |
|---|---|---|---|
| BATTERY WIRE | | | |
| | | | |
| | | | |
| | | | |
| | | | |
| | | | |
| | | | |

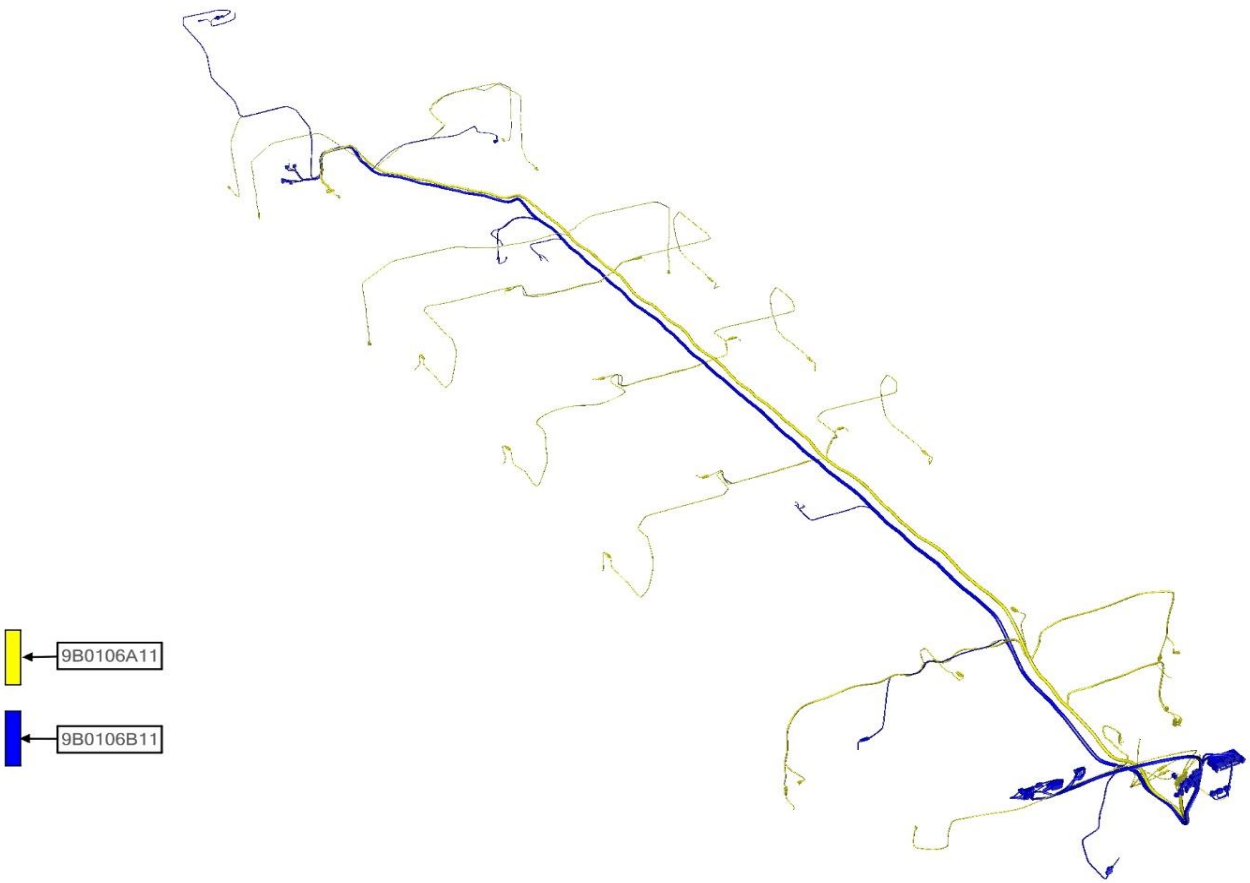


| ASSB_NAME | PART NO. | NAME | QTY |
|---|---|---|---|
| CHASSIS WIRE | 9B0106A11 | CHASSIS WIRE A | 1 |
| | 9B0106B11 | CHASSIS WIRE B | 1 |
| | | | |
| | | | |
| | | | |
| | | | |
| | | | |

| ASSB_NAME | PART NO. | NAME | QTY |
|---|---|---|---|
| CHASSIS WIRE | | | |
| | | | |
| | | | |
| | | | |
| | | | |
| | | | |
| | | | |

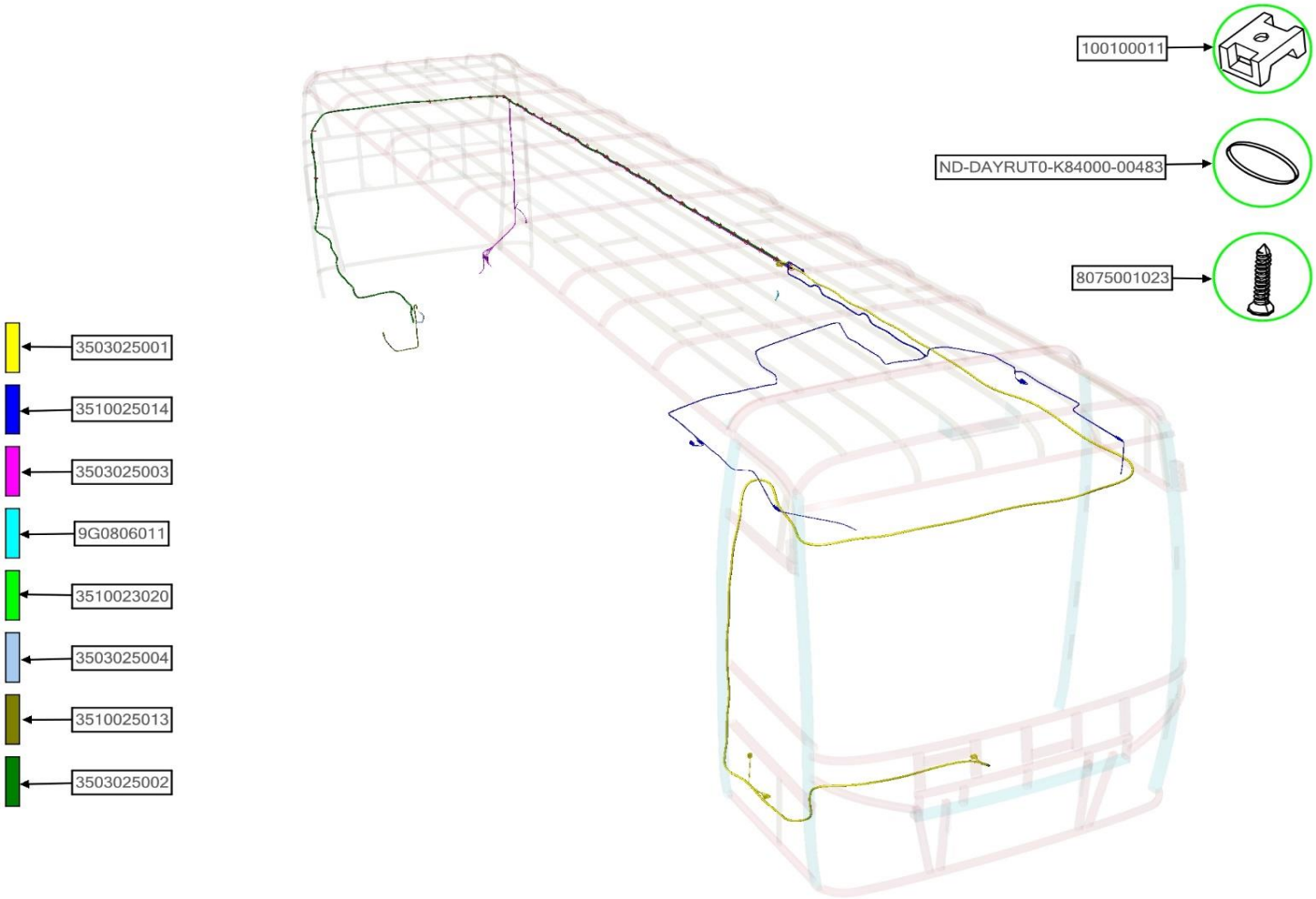


| ASSB_NAME | PART NO. | NAME | QTY |
|---|---|---|---|
| A/C ELECTRICAL HARNESS | ND-DAYRUT0-K84000-00483 | CABLE TIE 08400 | 34 |
| | 3503025001 | A/C SWITCH WIRE | 1 |
| | 3503025003 | CONNECTING COMPRESSOR WIRE | 1 |
| | 9G0806011 | A/C MASS WIRE | 1 |
| | 3510023020 | MASS RELAY WIRE | 1 |
| | 3510025013 | A/C POWER WIRE | 1 |
| | 3503025002 | A/C POWER WIRE | 1 |

| ASSB_NAME | PART NO. | NAME | QTY |
|---|---|---|---|
| A/C ELECTRICAL HARNESS | 3503025004 | FUSE RELAY WIRE | 1 |
| | 3510025014 | A/C LAMP WIRE | 1 |
| | 8075001023 | CREW 0420 | 34 |
| | 100100011 | MOUNTING | 34 |
| | | | |
| | | | |
| | | | |

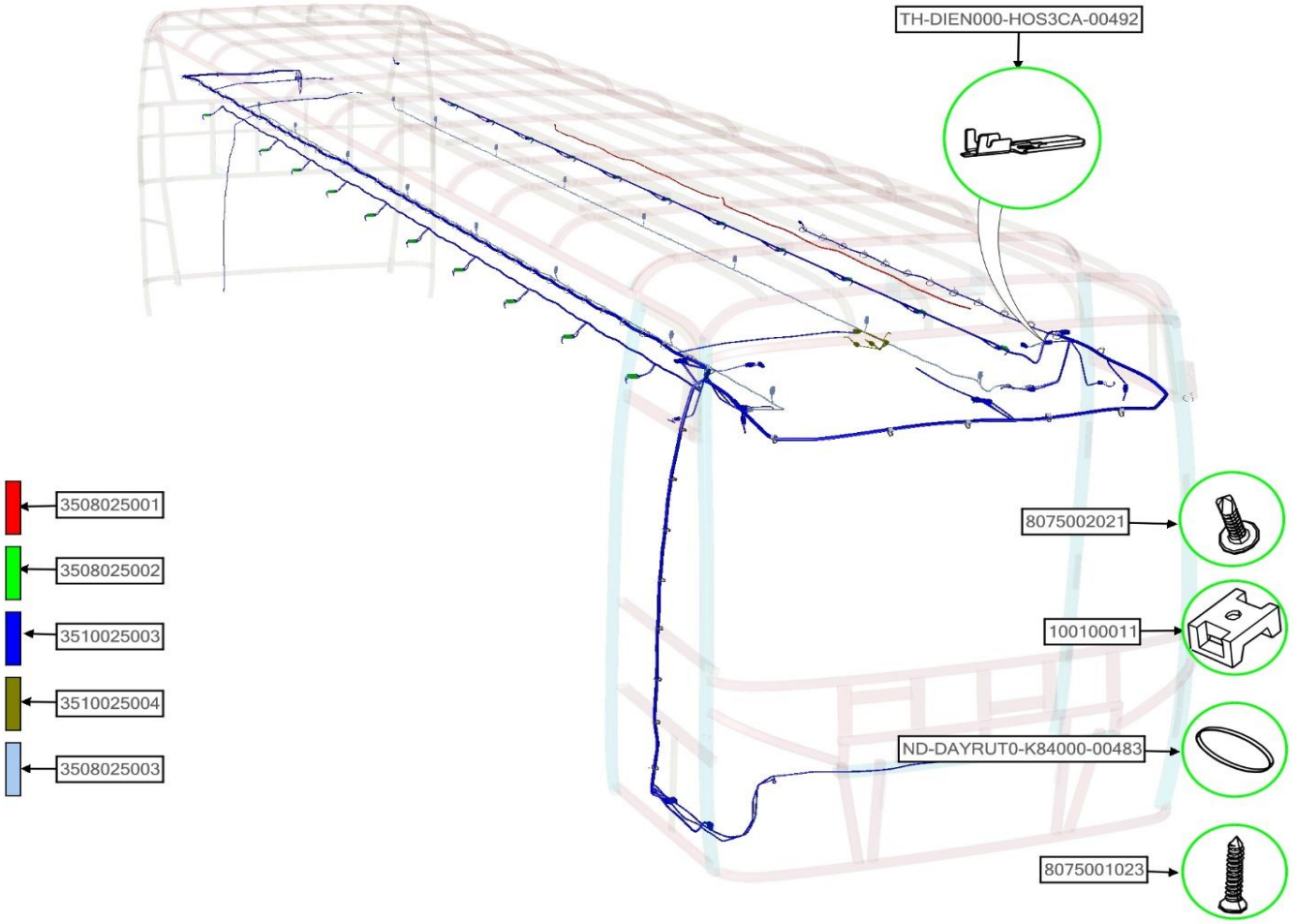


| ASSB_NAME | PART NO. | NAME | QTY |
|---|---|---|---|
| HEADLINING ELECTRICAL HARNESS - ASSY | ND-DAYRUT0-K84000-00483 | CABLE TIE 08400 | 71 |
| | 3508025003 | LUGGAGES RACK LIGHTS WIRE | 1 |
| | 3510025004 | CONECTING WIRE | 1 |
| | 3510025003 | HEADLINING ELECTRICAL HARNESS | 1 |
| | 3508025001 | LAMP-SPEAKER WIRE - ASSY | 1 |
| | 3508025002 | LAMP-SPEAKER WIRE - ASSY | 1 |
| | TH-DIEN000-HOS3CA-00492 | TERMINAL ST740255-1 | 16 |

| ASSB_NAME | PART NO. | NAME | QTY |
|---|---|---|---|
| HEADLINING ELECTRICAL HARNESS - ASSY | 8075001023 | CREW 0420 | 63 |
| | 8075002021 | CREW 0420 | 8 |
| | 100100011 | MOUNTING | 63 |
| | | | |
| | | | |
| | | | |
| | | | |

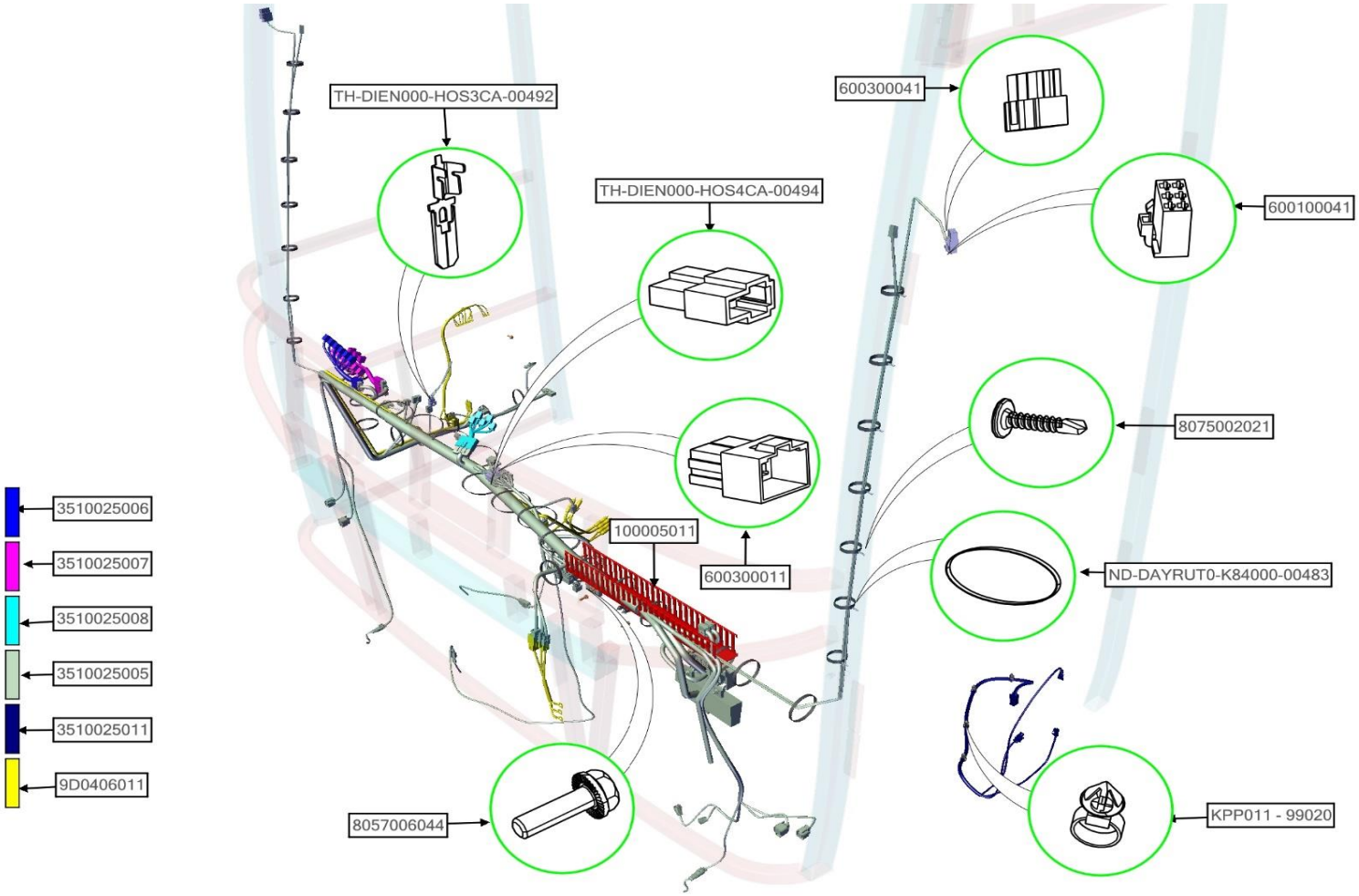


| ASSB_NAME | PART NO. | NAME | QTY |
|---|---|---|---|
| DASHBOARD ELECTRICAL HARNESS - ASSY | 8057006044 | BOLT 06020100 | 10 |
| | KPP011 - 99020 | CLIP | 8 |
| | 600100041 | CONNECTOR 610049 | 2 |
| | 600300011 | CONNECTOR 620042 | 6 |
| | TH-DIEN000-HOS4CA-00494 | CONNECTOR 620046 | 2 |
| | 600300041 | CONNECTOR 620048 | 2 |
| | ND-DAYRUT0-K84000-00483 | CABLE TIE 08400 | 1 |
| | TH-DIEN000-HOS3CA-00492 | TERMINAL ST740255-1 | 1 |

| ASSB_NAME | PART NO. | NAME | QTY |
|---|---|---|---|
| DASHBOARD ELECTRICAL HARNESS - ASSY | 3510025006 | SWITCH WIRE | 1 |
| | 3510025007 | SWITCH WIRE | 1 |
| | 3510025008 | LEFT SWITCH WIRE | 1 |
| | 3510025005 | DASHBOARD WIRE | 1 |
| | 9D0406011 | INTERGRATED DASHBOARD WIRE | 1 |
| | 3510025011 | CONTROLING DOOR WIRE | 1 |
| | 100005011 | BRACKET PLASTIC | 1 |
| | 8075002021 | SCREW 0420 | 19 |

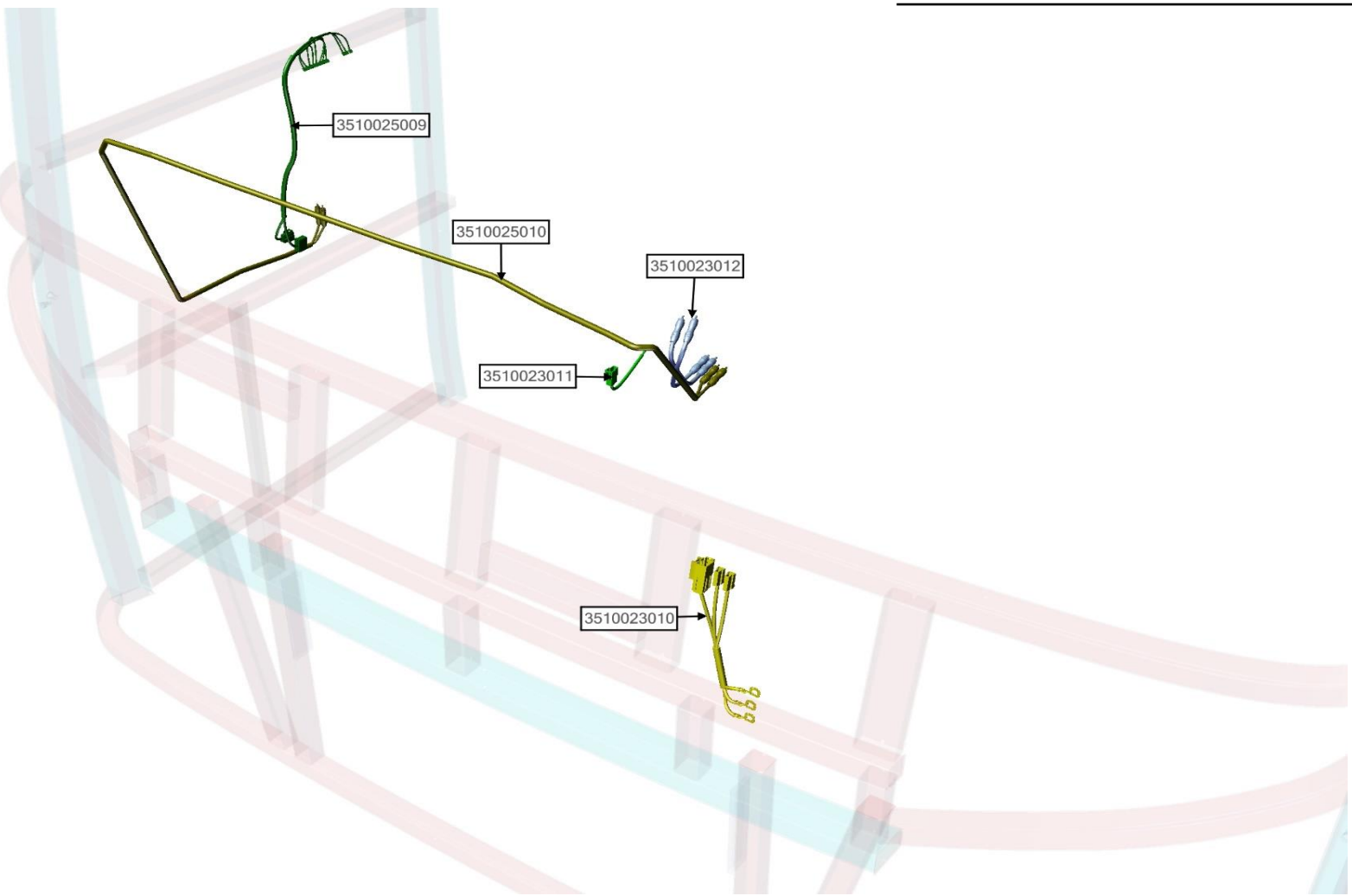


| ASSB_NAME | PART NO. | NAME | QTY |
|---|---|---|---|
| INTERGRATE DDASHBOARD WIRE | 3510023010 | TRANSFORMER WIRE | 1 |
| | 3510023011 | CONNECTING MIXER WIRE | 1 |
| | 3510023012 | MIXER WIRE | 1 |
| | 3510025010 | AMPLIFIER WIRE | 1 |
| | 3510025009 | AMPLIFIER WIRE | 1 |
| | | | |
| | | | |

| ASSB_NAME | PART NO. | NAME | QTY |
|---|---|---|---|
| INTERGRATE DDASHBOARD WIRE | | | |
| | | | |
| | | | |
| | | | |
| | | | |
| | | | |
| | | | |

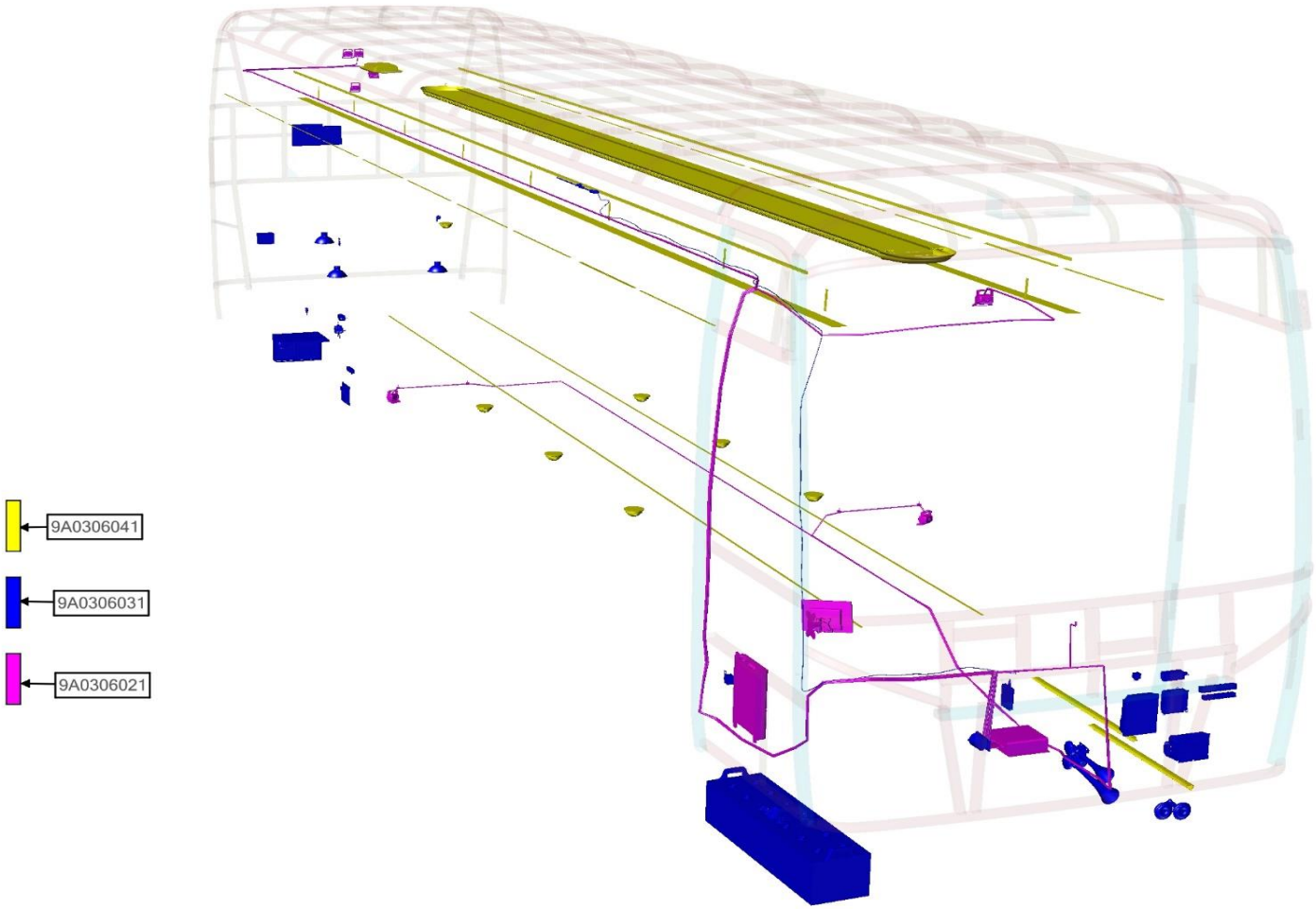


| ASSB_NAME | PART NO. | NAME | QTY |
|---|---|---|---|
| ELECTRICAL DEVICE | 9A0306041 | HEADLIGHT SYSTEM | 1 |
| | 9A0306031 | SAFETY AND CONVENIENCE SYSTEM | 1 |
| | 9A0306021 | SOUND, IMAGE SYSTEM | 1 |
| | | | |
| | | | |
| | | | |
| | | | |

| ASSB_NAME | PART NO. | NAME | QTY |
|---|---|---|---|
| ELECTRICAL DEVICE | | | |
| | | | |
| | | | |
| | | | |
| | | | |
| | | | |
| | | | |

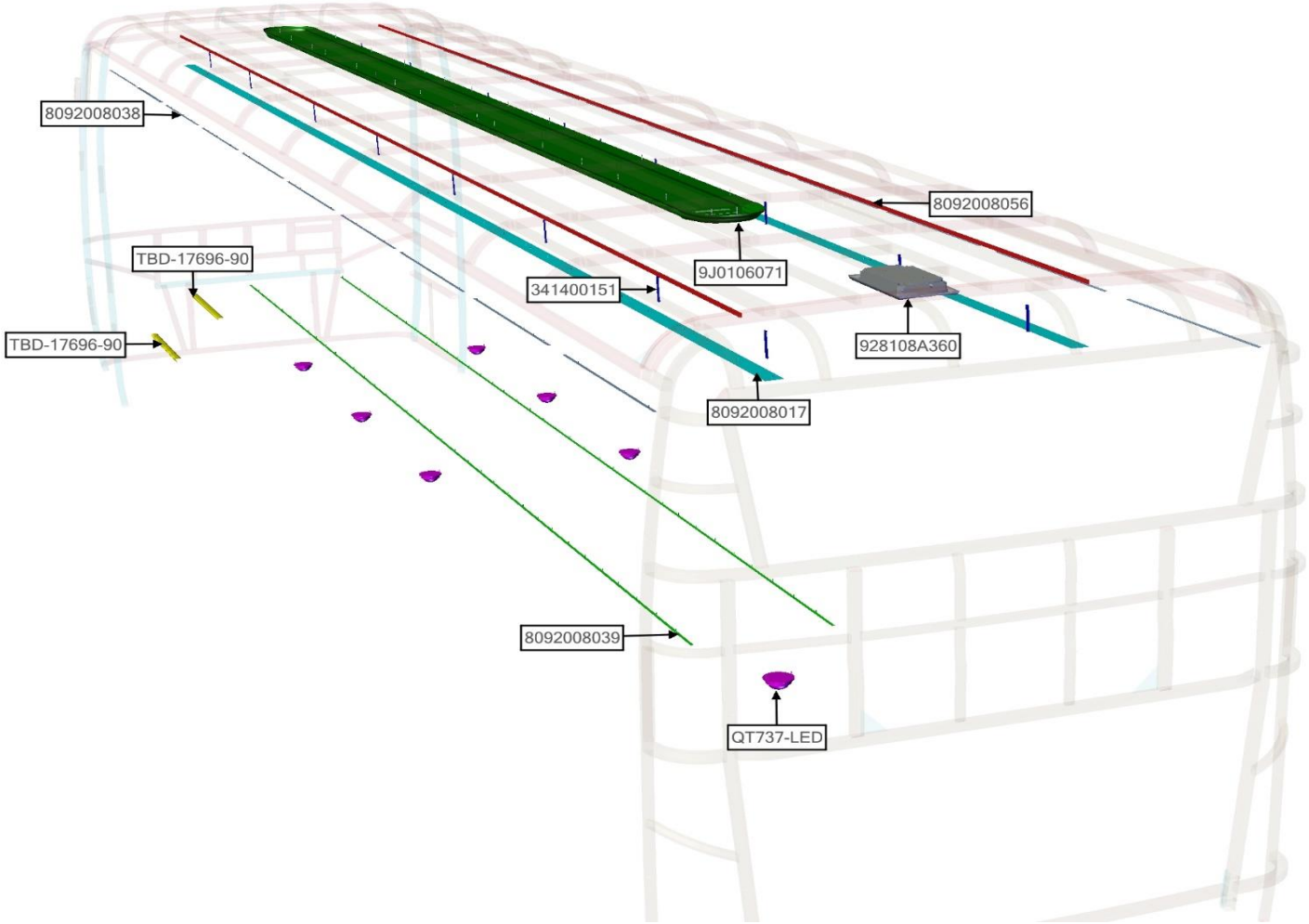


| ASSB_NAME | PART NO. | NAME | QTY |
|---|---|---|---|
| HEADLIGHT SYSTEM | 9J0106071 | LED 3D ASSY | 1 |
| | 8092008017 | LED | 22 |
| | 8092008056 | LED | 2 |
| | 8092008039 | LED | 18 |
| | 8092008038 | LED | 18 |
| | TBD-17696-90 | LED MOULDING | 1 |
| | TBD-17696-90 | LED MOULDING | 1 |

| ASSB_NAME | PART NO. | NAME | QTY |
|---|---|---|---|
| HEADLIGHT SYSTEM | QT737-LED | LUGGAGES TRUNK LIGHTS | 7 |
| | 928108A360 | HEADLINING LIGHTS | 1 |
| | 341400151 | LED 20X110 (BLUE) | 16 |
| | | | |
| | | | |
| | | | |
| | | | |

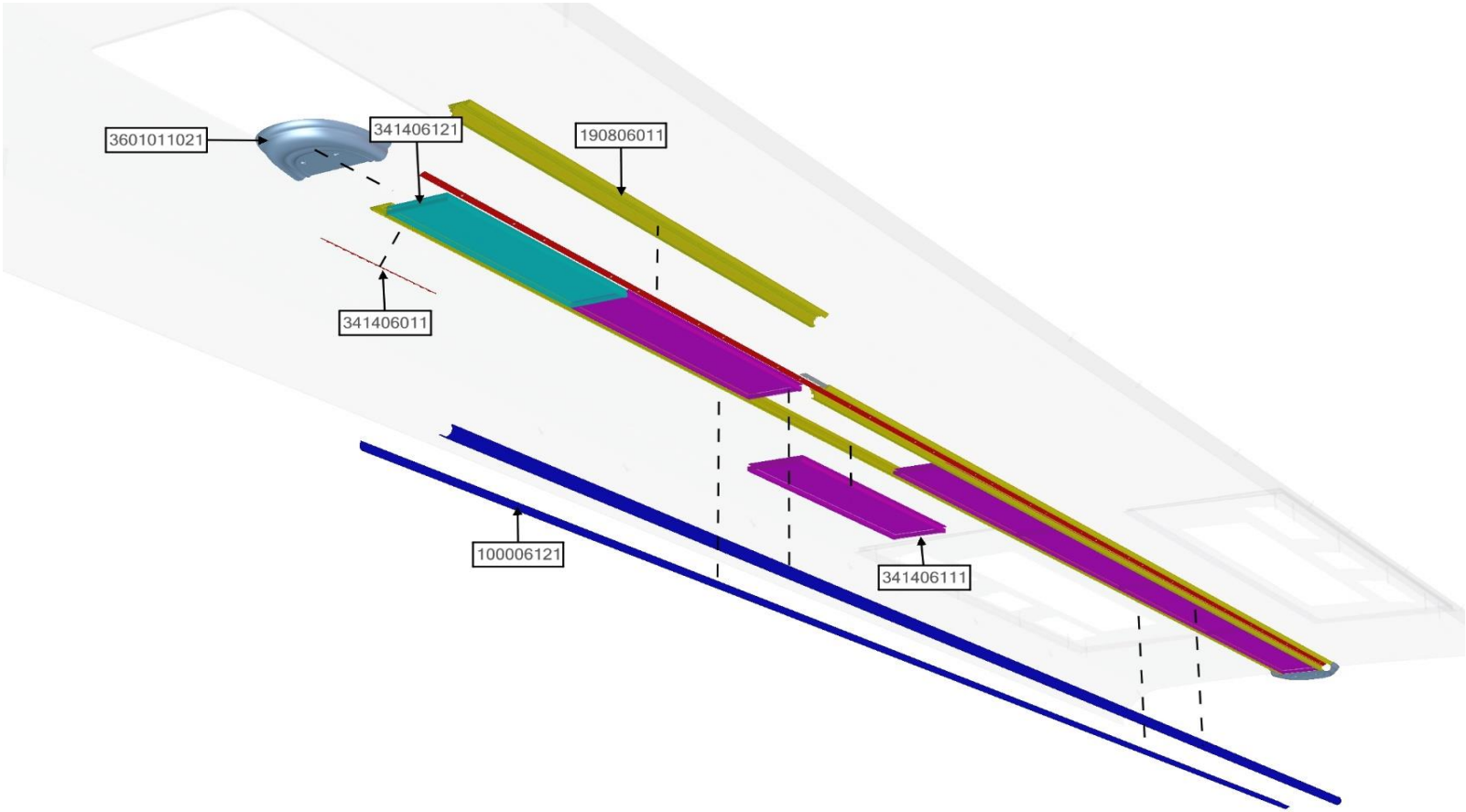


| ASSB_NAME | PART NO. | NAME | QTY |
|---|---|---|---|
| LED 3D ASSY | 341406011 | LED 20X500 | 30 |
| | 190806011 | MOULDING | 4 |
| | 100006121 | MOULDING | 4 |
| | 341406111 | LED 3D 210x1076 | 6 |
| | 341406121 | LED 3D 210x900 | 1 |
| | 3601011021 | COVER | 2 |
| | | | |

| ASSB_NAME | PART NO. | NAME | QTY |
|---|---|---|---|
| LED 3D ASSY | | | |
| | | | |
| | | | |
| | | | |
| | | | |
| | | | |
| | | | |

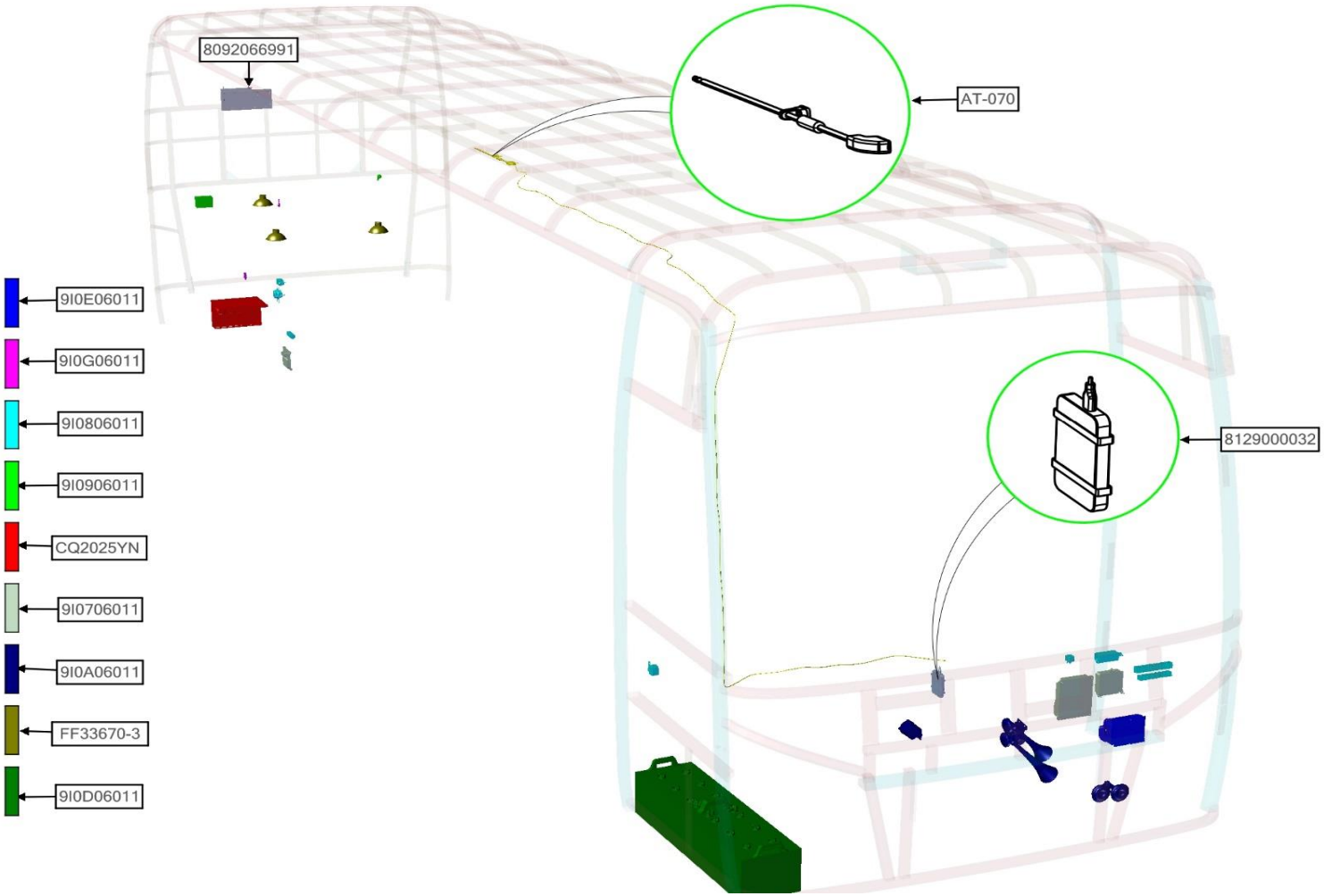


| ASSB_NAME | PART NO. | NAME | QTY |
|---|---|---|---|
| SAFETY AND CONVENIENCE SYSTEM | 8092066991 | EXIT | 1 |
| | FF33670-3 | FIRE FIGHTING DEVICE | 3 |
| | 9I0E06011 | TRANSFOMER POWER | 1 |
| | 9I0906011 | SWITCHS | 1 |
| | 9I0G06011 | SENSOR | 1 |
| | 9I0806011 | FUSE AND RELAY | 1 |
| | CQ2025YN | POWER BOX | 1 |

| ASSB_NAME | PART NO. | NAME | QTY |
|---|---|---|---|
| SAFETY AND CONVENIENCE SYSTEM | 9I0706011 | SIGNAL PROCESSOR | 1 |
| | 9I0A06011 | HORN | 1 |
| | 9I0D06011 | BATTERY - ASSY | 1 |
| | AT-070 | ANTENA | 1 |
| | 8129000032 | HARD DISK 1TB | 1 |
| | | | |
| | | | |

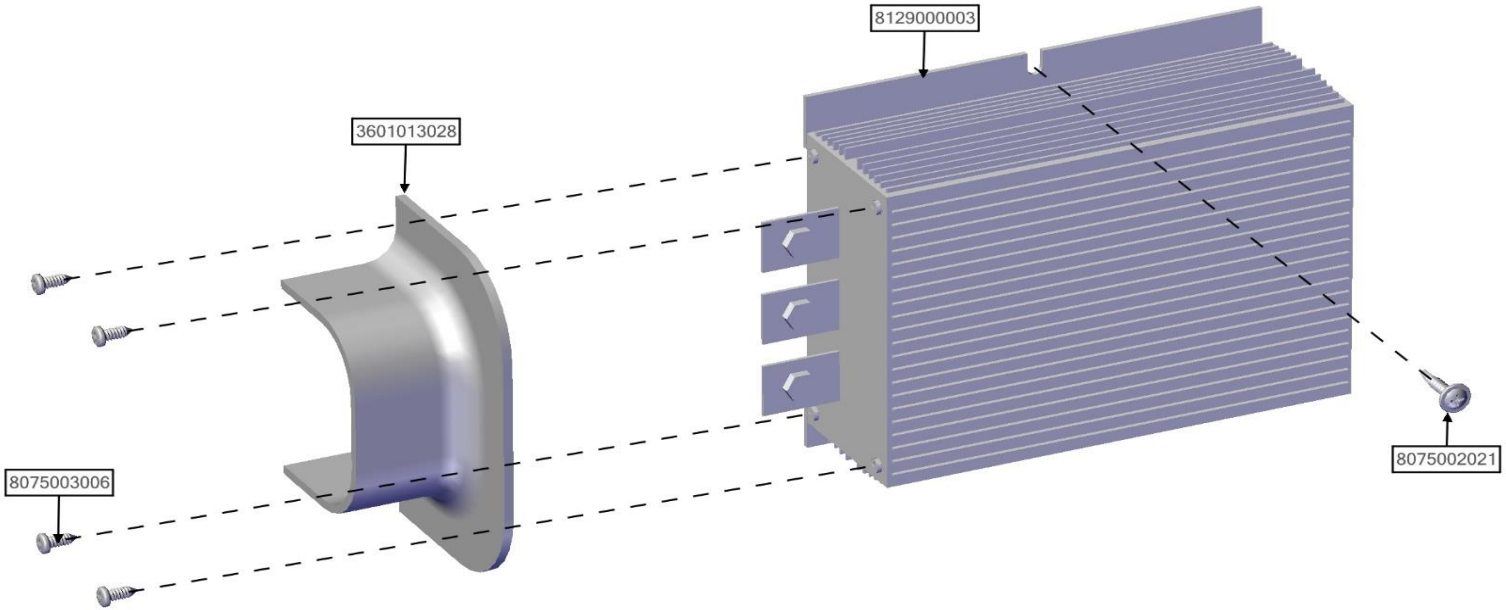


| ASSB_NAME | PART NO. | NAME | QTY |
|---|---|---|---|
| TRANSFOMER POWER | 8129000003 | TRANSFOMER POWER | 1 |
| | 8075003006 | SCREW 0410 | 4 |
| | 8075002021 | SCREW 0420 | 2 |
| | 3601013028 | COVER | 1 |
| | | | |
| | | | |
| | | | |

| ASSB_NAME | PART NO. | NAME | QTY |
|---|---|---|---|
| TRANSFOMER POWER | | | |
| | | | |
| | | | |
| | | | |
| | | | |
| | | | |
| | | | |

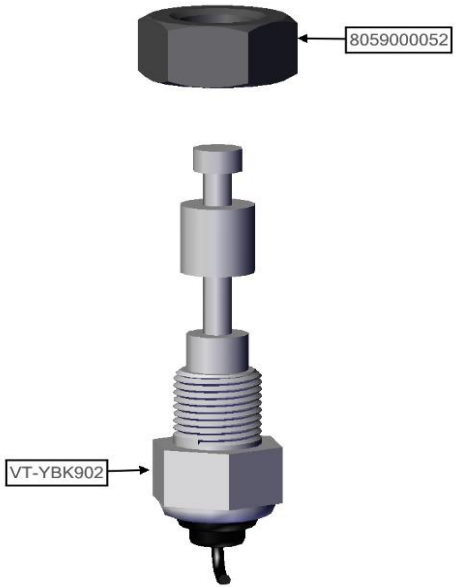


| ASSB_NAME | PART NO. | NAME | QTY |
|---|---|---|---|
| SENSOR | VT-YBK902 | WATER LOW LEVER SENSOR | 1 |
| | | TEMPERATURE SENSOR | 1 |
| | 8059000052 | NUT 14150 | 1 |
| | | | |
| | | | |
| | | | |
| | | | |

| ASSB_NAME | PART NO. | NAME | QTY |
|---|---|---|---|
| SENSOR | | | |
| | | | |
| | | | |
| | | | |
| | | | |
| | | | |
| | | | |

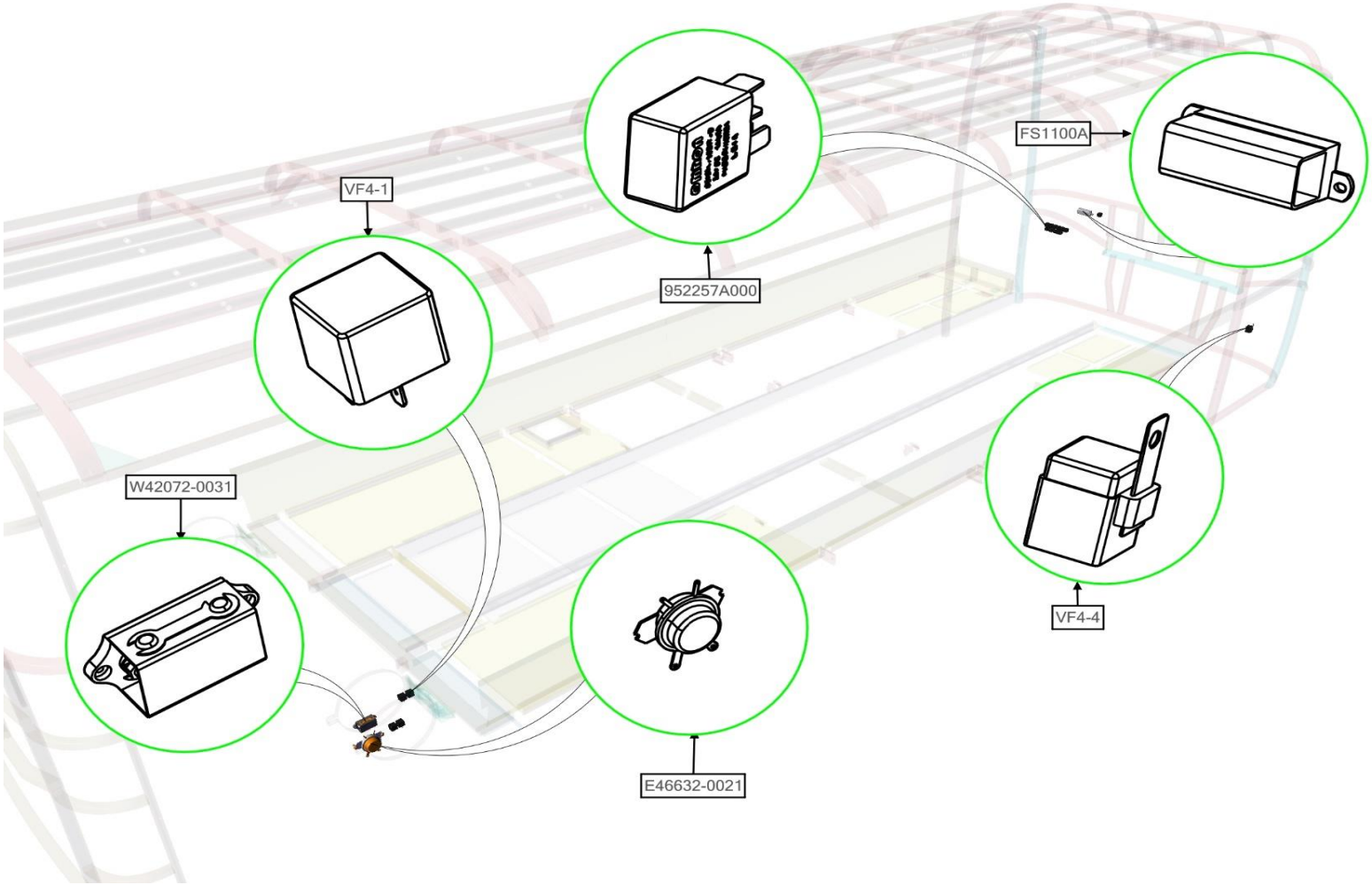


| ASSB_NAME | PART NO. | NAME | QTY |
|---|---|---|---|
| FUSE AND RELAY | FS1100A | FUSE 100A | 1 |
| | W42072-0031 | FUSE 100A | 1 |
| | VF4-1 | RELAY A | 11 |
| | 952257A000 | RELAY B | 8 |
| | VF4-4 | RELAY C | 1 |
| | E46632-0021 | A/C RELAY | 1 |
| | | | |

| ASSB_NAME | PART NO. | NAME | QTY |
|---|---|---|---|
| FUSE AND RELAY | | | |
| | | | |
| | | | |
| | | | |
| | | | |
| | | | |
| | | | |

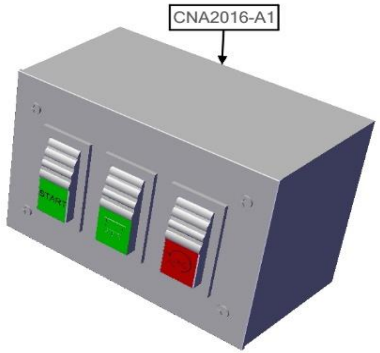


| ASSB_NAME | PART NO. | NAME | QTY |
|---|---|---|---|
| SWITCHS | 670A-1111020 | LIGHT SWITCH | 1 |
| | CNA2016-A1 | SUB-START SWITCH | 1 |
| | | | |
| | | | |
| | | | |
| | | | |
| | | | |

| ASSB_NAME | PART NO. | NAME | QTY |
|---|---|---|---|
| SWITCHS | | | |
| | | | |
| | | | |
| | | | |
| | | | |
| | | | |
| | | | |

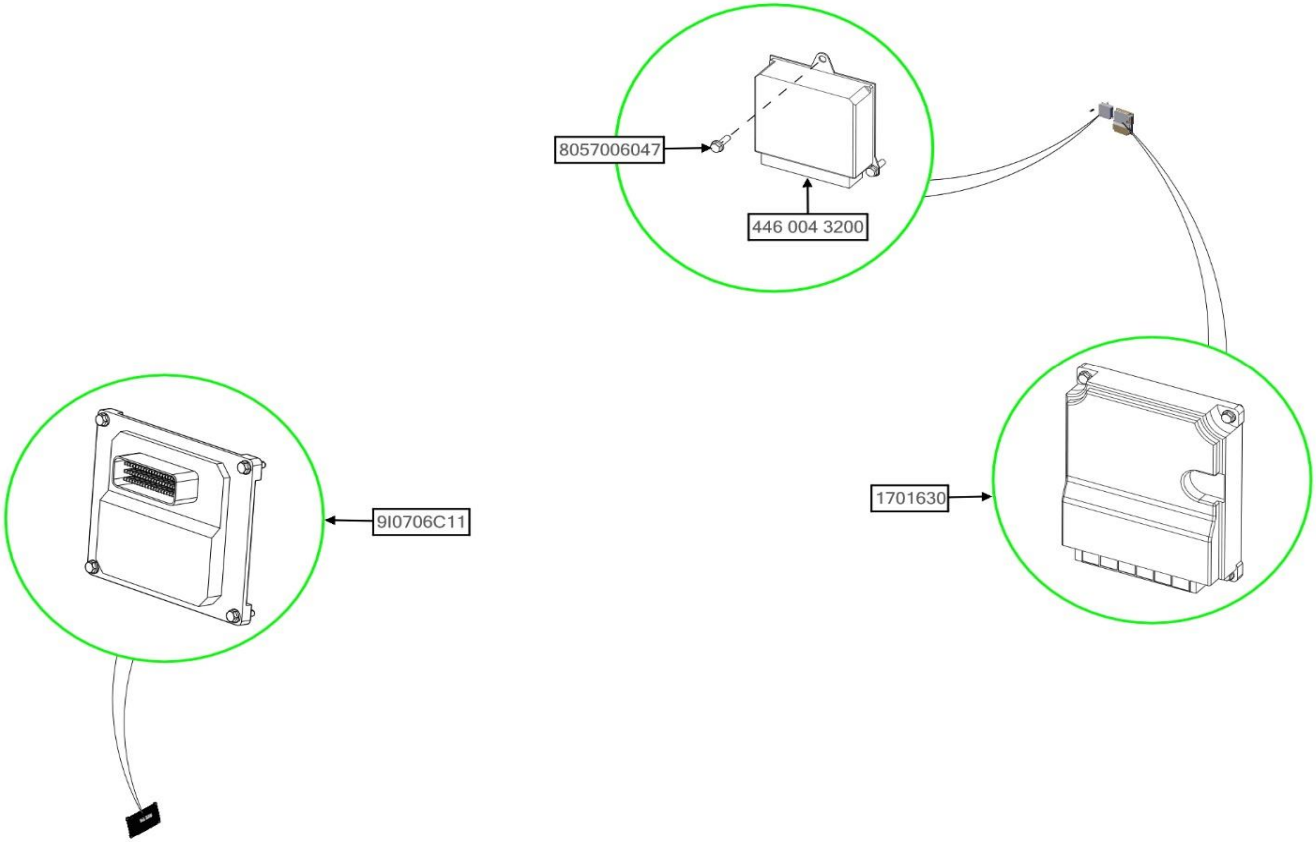


| ASSB_NAME | PART NO. | NAME | QTY |
|---|---|---|---|
| SIGNAL PROCESSOR | 8057006047 | BOLT 06020100 | 1 |
| | 9I0706C11 | ECU PROCESSOR | 1 |
| | 446 004 3200 | ABS PROCESSOR | 1 |
| | 1701630 | CENTRAL SIGNAL PROCESSOR | 1 |
| | | | |
| | | | |
| | | | |

| ASSB_NAME | PART NO. | NAME | QTY |
|---|---|---|---|
| SIGNAL PROCESSOR | | | |
| | | | |
| | | | |
| | | | |
| | | | |
| | | | |
| | | | |

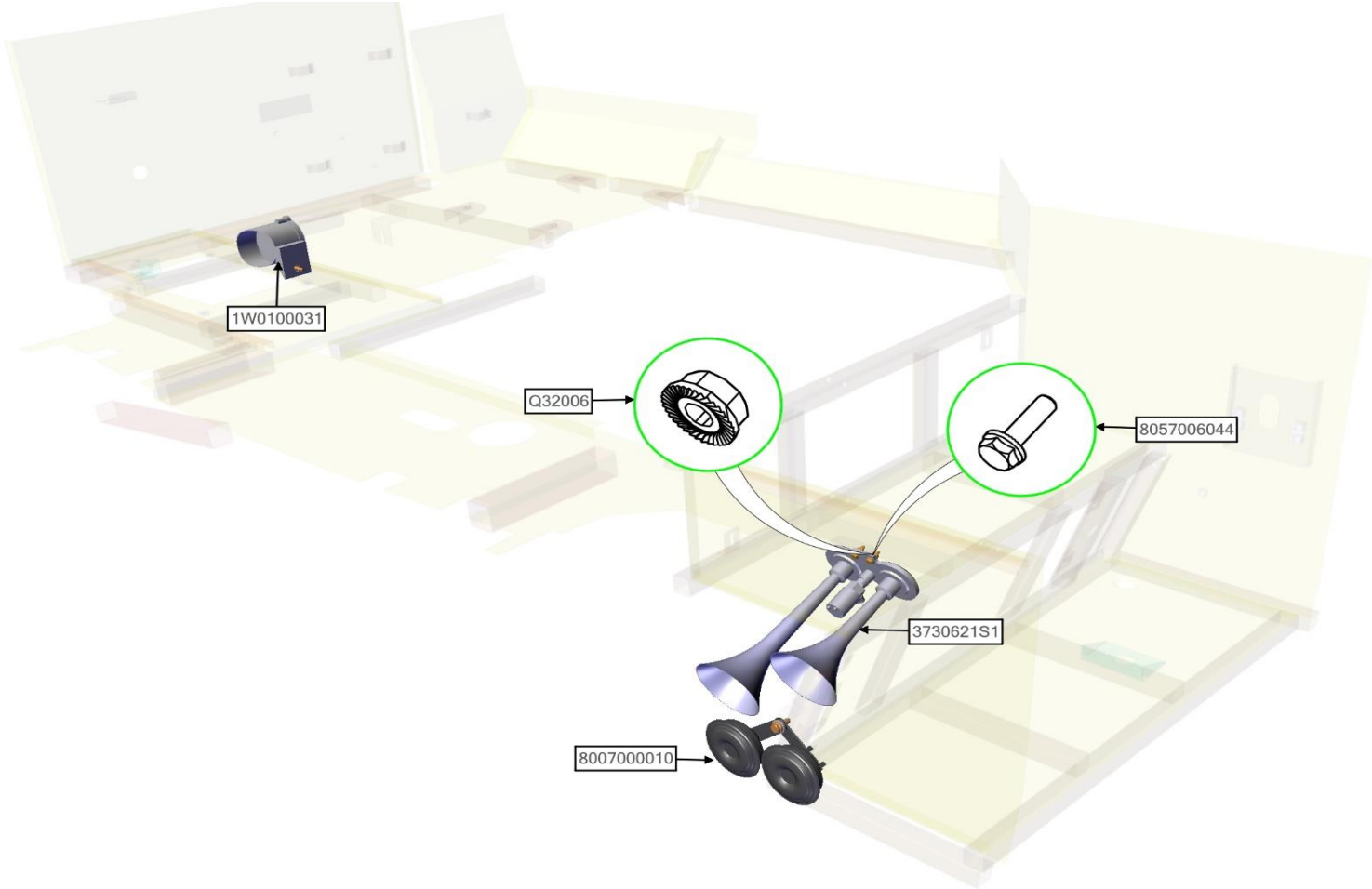


| ASSB_NAME | PART NO. | NAME | QTY |
|---|---|---|---|
| HORN | 8057006044 | BOLT 06020100 | 1 |
| | 1W0100031 | HORN | 1 |
| | 3730621S1 | AIR HORN | 1 |
| | 8007000010 | ELECTRICAL HORN | 2 |
| | Q32006 | NUT 06100 | 1 |
| | | | |
| | | | |

| ASSB_NAME | PART NO. | NAME | QTY |
|---|---|---|---|
| HORN | | | |
| | | | |
| | | | |
| | | | |
| | | | |
| | | | |
| | | | |

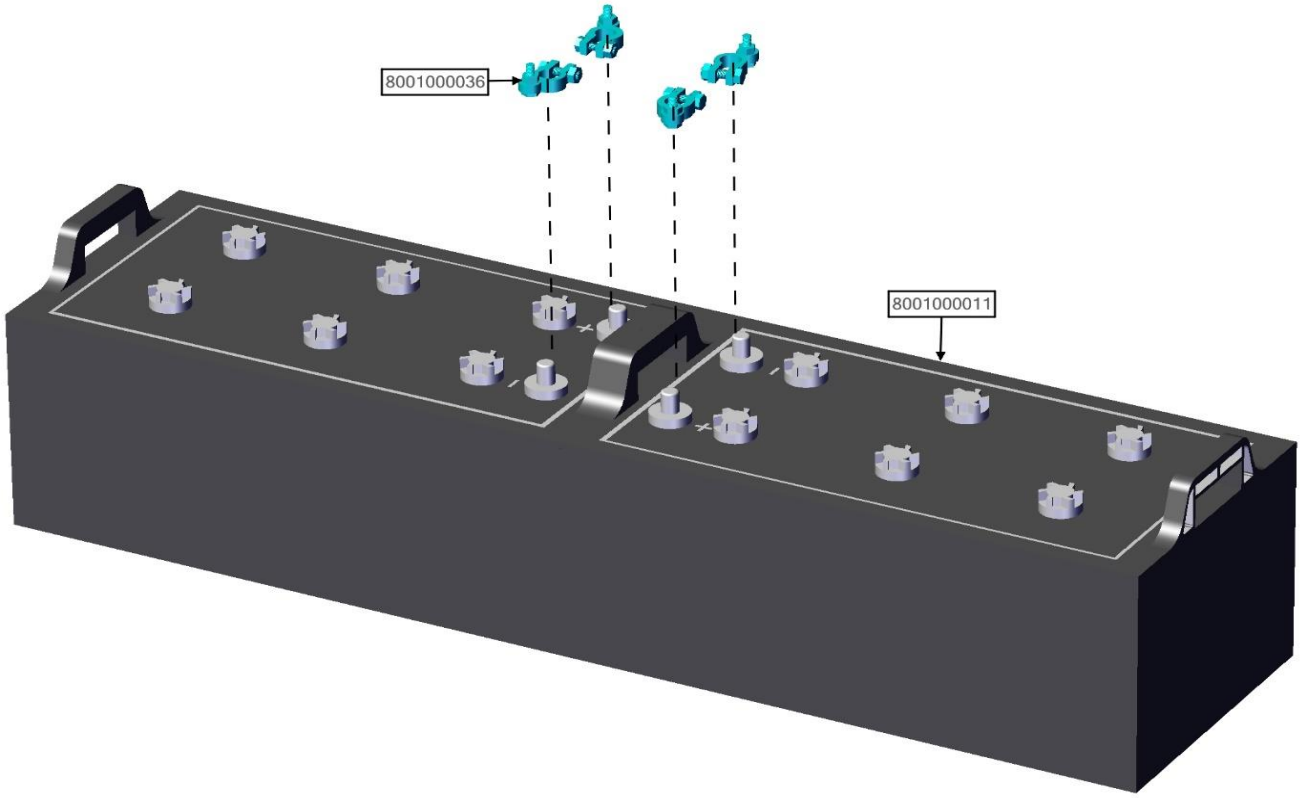


| ASSB_NAME | PART NO. | NAME | QTY |
|---|---|---|---|
| BATTERY - ASSY | 8001000011 | BATTERY | 2 |
| | 8001000036 | BATTERY CLAMP P + N | 2 |
| | | | |
| | | | |
| | | | |
| | | | |
| | | | |

| ASSB_NAME | PART NO. | NAME | QTY |
|---|---|---|---|
| BATTERY - ASSY | | | |
| | | | |
| | | | |
| | | | |
| | | | |
| | | | |

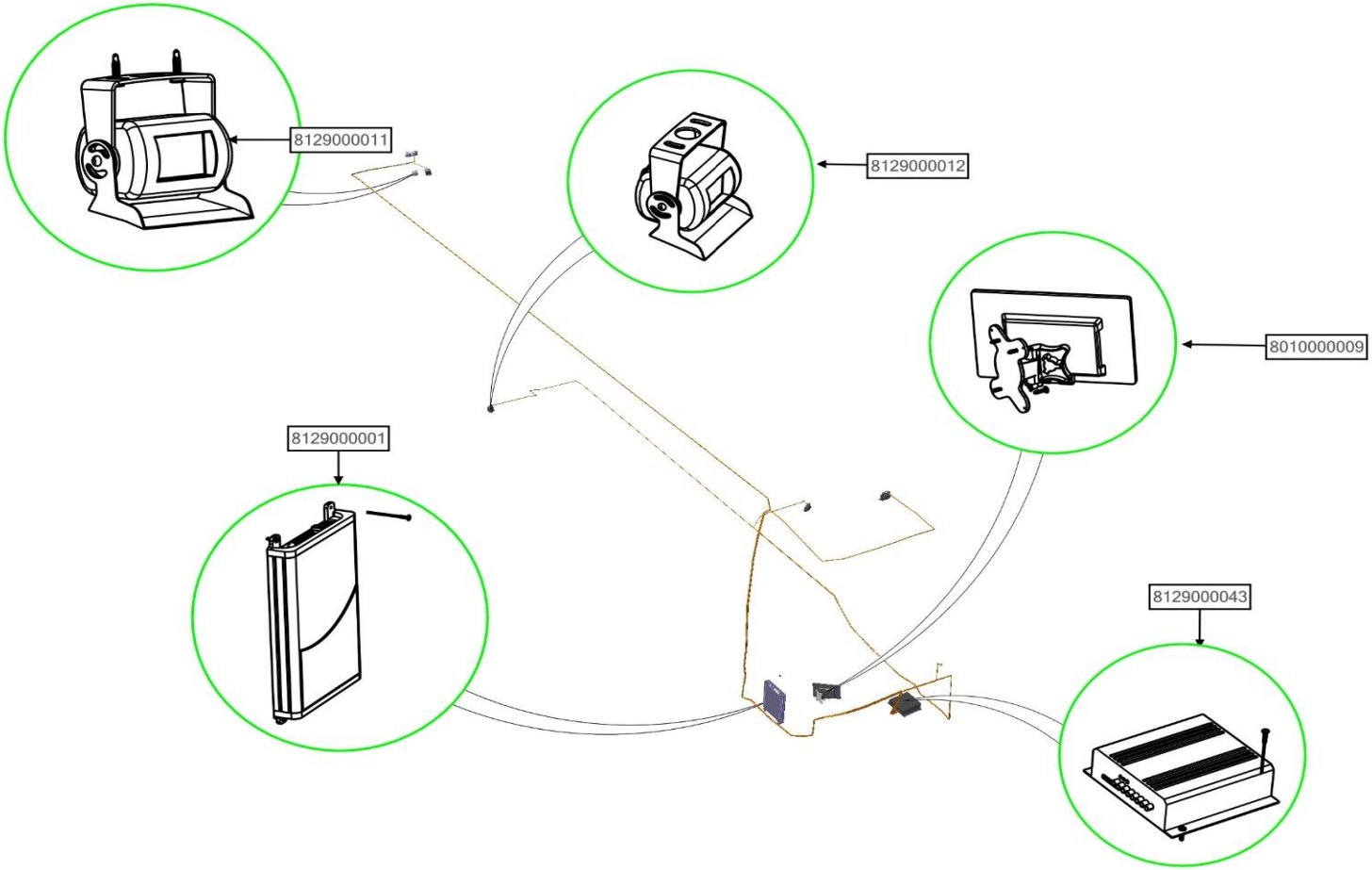


| ASSB_NAME | PART NO. | NAME | QTY |
|---|---|---|---|
| SOUND, IMAGE SYSTEM | 8129000011 | CAMERA | 1 |
| | 8129000012 | CAMERA | 4 |
| | 8010000009 | CAMERA | 1 |
| | 8129000001 | AMPLY | 1 |
| | 8129000043 | RECODER | 1 |
| | | | |
| | | | |

| ASSB_NAME | PART NO. | NAME | QTY |
|---|---|---|---|
| SOUND, IMAGE SYSTEM | | | |
| | | | |
| | | | |
| | | | |
| | | | |
| | | | |
| | | | |

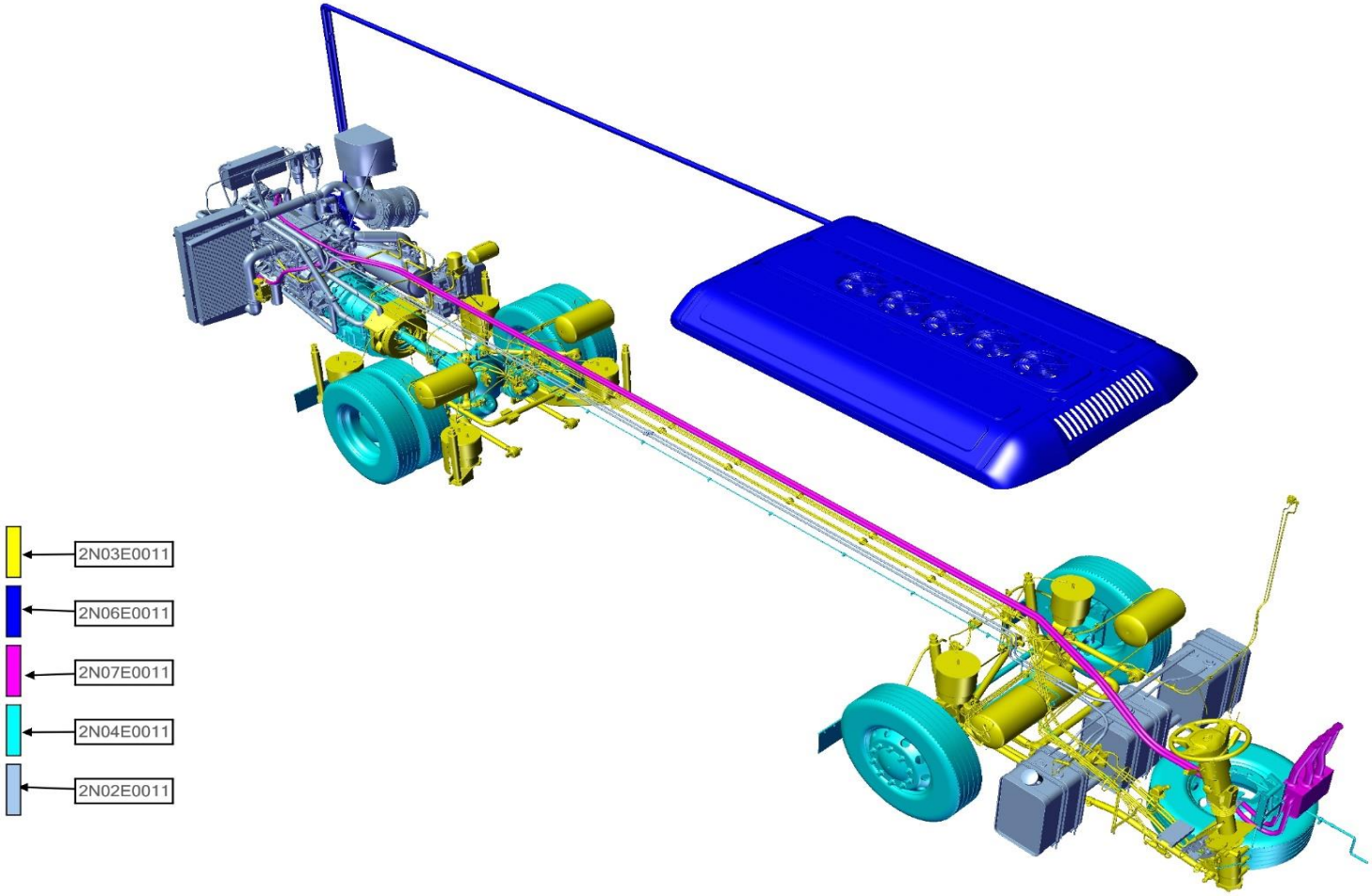


| ASSB_NAME | PART NO. | NAME | QTY |
|---|---|---|---|
| BARE CHASSIS | 2N02E0011 | DIESEL ENGINE ASSY | 1 |
| | 2N03E0011 | CHASSIS FUNCTION SYSTEM | 1 |
| | 2N04E0011 | POWERTRAIN | 1 |
| | 2N06E0011 | AIR CONDITIONING SYSTEM | 1 |
| | 2N07E0011 | GLASS HEATING SYSTEM | 1 |
| | | | |
| | | | |

| ASSB_NAME | PART NO. | NAME | QTY |
|---|---|---|---|
| BARE CHASSIS | | | |
| | | | |
| | | | |
| | | | |
| | | | |
| | | | |
| | | | |

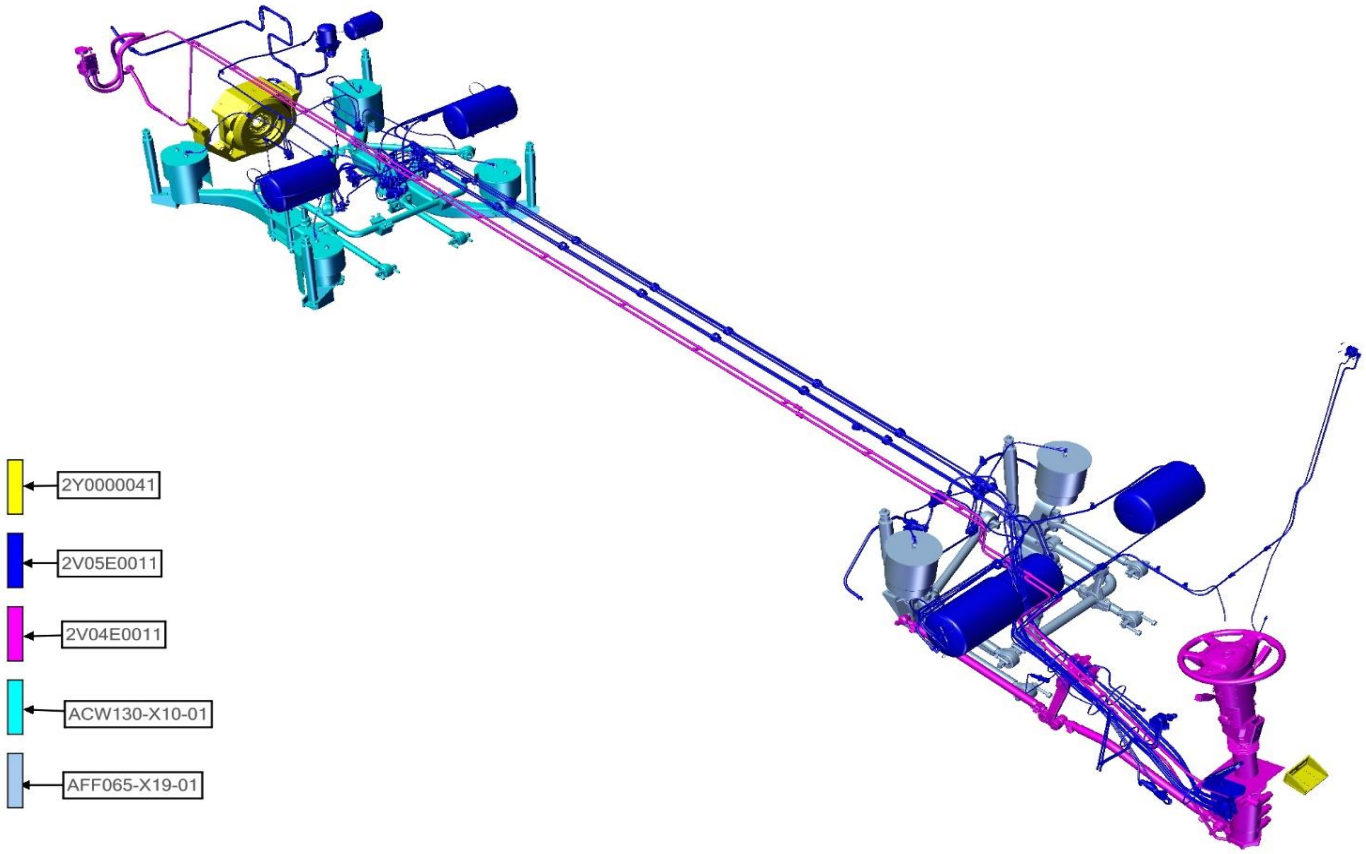


| ASSB_NAME | PART NO. | NAME | QTY |
|---|---|---|---|
| CHASSIS FUNCTION SYSTEM | 2Y0000041 | ELECTROMAGNETIC BRAKE - ASSY | 1 |
| | 2V04E0011 | STEERING SYSTEM | 1 |
| | 2V05E0011 | AIR COMPRESION SYSTEM | 1 |
| | ACW130-X10-01 | REAR SUSPENSION SYSTEM | 1 |
| | AFF065-X19-01 | FRONT SUSPENSION SYSTEM | 1 |
| | | | |
| | | | |

| ASSB_NAME | PART NO. | NAME | QTY |
|---|---|---|---|
| CHASSIS FUNCTION SYSTEM | | | |
| | | | |
| | | | |
| | | | |
| | | | |
| | | | |
| | | | |

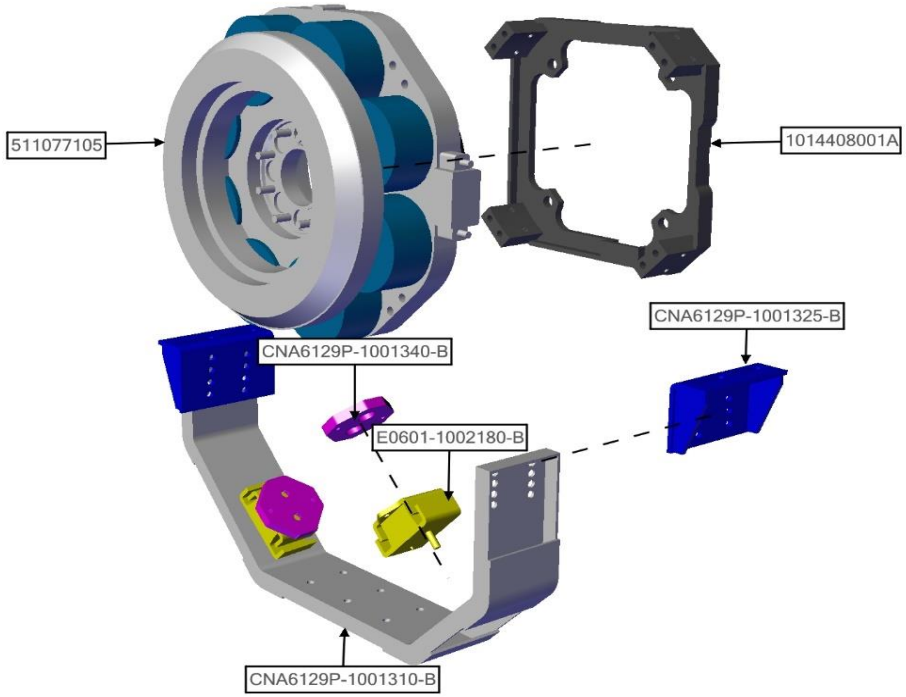


| ASSB_NAME | PART NO. | NAME | QTY |
|---|---|---|---|
| ELECTROMAGNETIC BRAKE - ASSY | 511077105 | ELECTROMAGNETIC BRAKE | 1 |
| | 1014408001A | BRACKET | 1 |
| | CNA6129P-1001310-B | BRACKET | 1 |
| | CNA6129P-1001325-B | BRACKET | 2 |
| | CNA6129P-1001340-B | BRACKET | 2 |
| | CNA6129P-3524110 | HEAT INSULATION PLATE | 1 |
| | E0601-1002180-B | RETARDER CUSHION | 2 |

| ASSB_NAME | PART NO. | NAME | QTY |
|---|---|---|---|
| ELECTROMAGNETIC BRAKE - ASSY | | | |
| | | | |
| | | | |
| | | | |
| | | | |
| | | | |
| | | | |

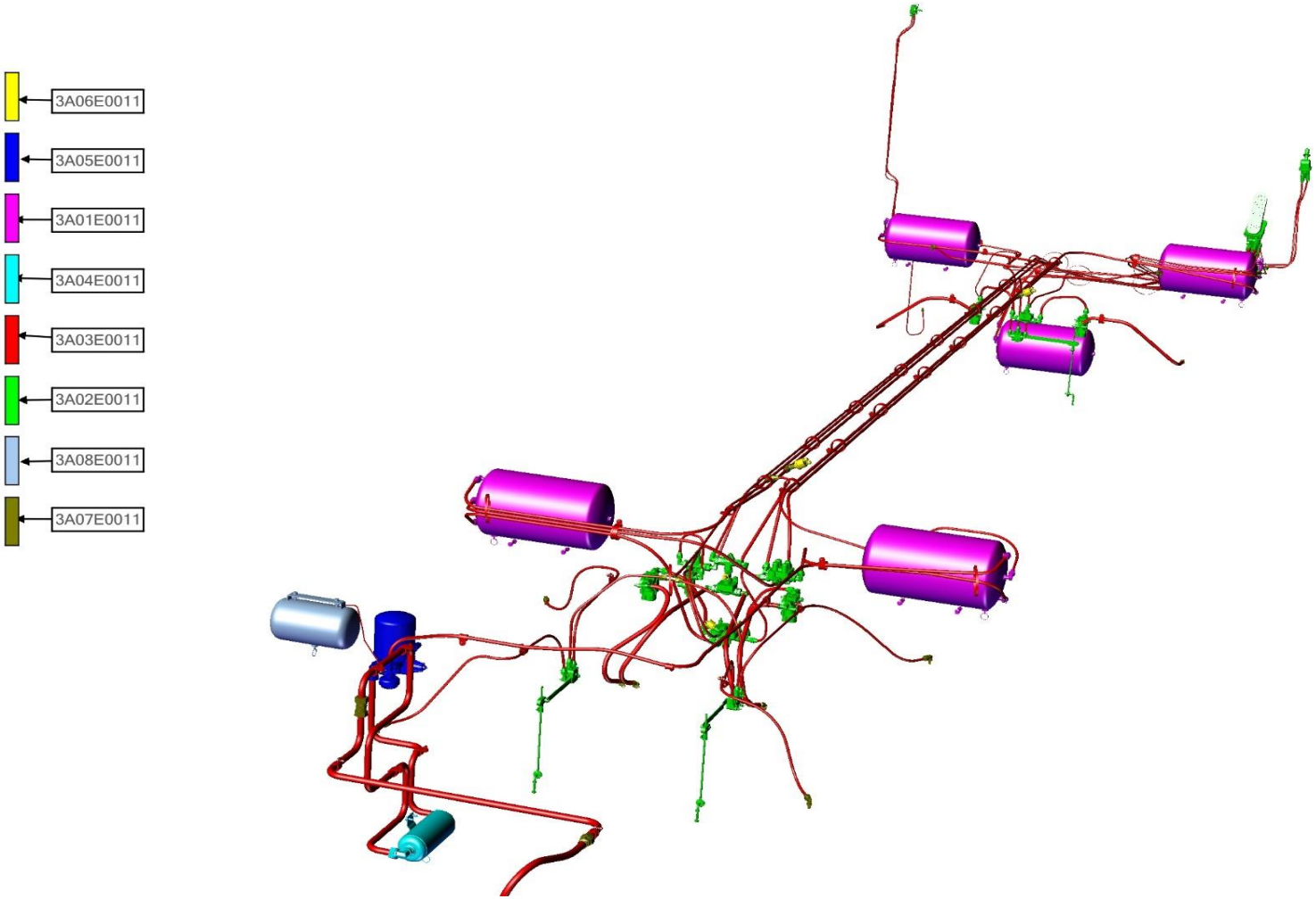


| ASSB_NAME | PART NO. | NAME | QTY |
|---|---|---|---|
| AIR COMPRESION SYSTEM | 3A01E0011 | AIR TANK ASSY | 1 |
| | 3A02E0011 | AIR VALVE | 1 |
| | 3A03E0011 | AIR PIPING | 1 |
| | 3A04E0011 | WATER EXHAUST TANK ASSY | 1 |
| | 3A05E0011 | DRYER ASSY | 1 |
| | 3A06E0011 | SENSOR | 1 |
| | 3A07E0011 | CONNECTOR SYSTEM | 1 |

| ASSB_NAME | PART NO. | NAME | QTY |
|---|---|---|---|
| AIR COMPRESION SYSTEM | 3A08E0011 | PURGE TANK ASSY | 1 |
| | | | |
| | | | |
| | | | |
| | | | |
| | | | |
| | | | |

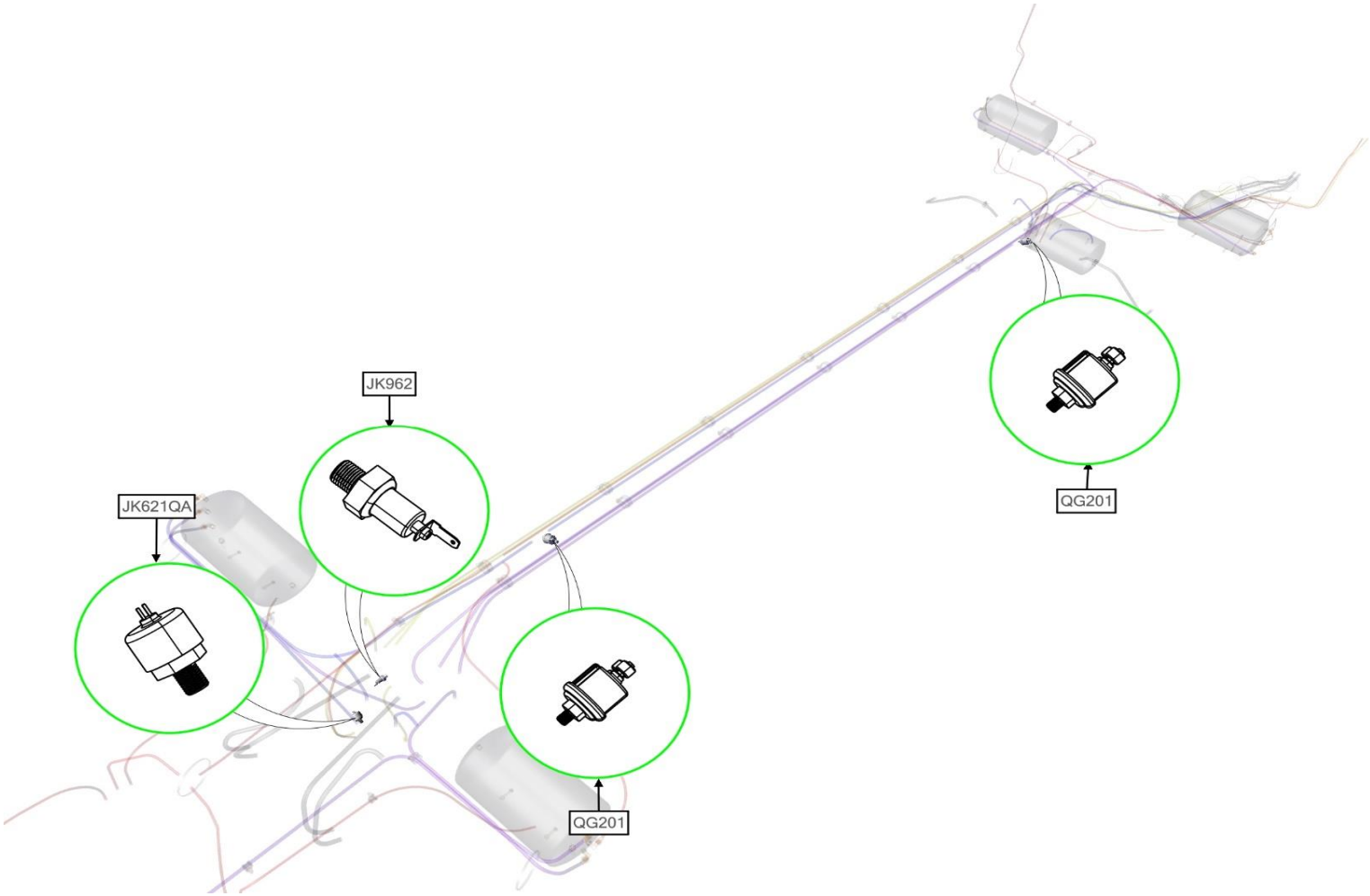


| ASSB_NAME | PART NO. | NAME | QTY |
|---|---|---|---|
| SENSOR | JK621QA | STOP SENSOR | 1 |
| | JK962 | ACTUATOR SENSOR | 1 |
| | QG201 | PRESSURE SENSOR | 2 |
| | | | |
| | | | |
| | | | |
| | | | |

| ASSB_NAME | PART NO. | NAME | QTY |
|---|---|---|---|
| SENSOR | | | |
| | | | |
| | | | |
| | | | |
| | | | |
| | | | |
| | | | |

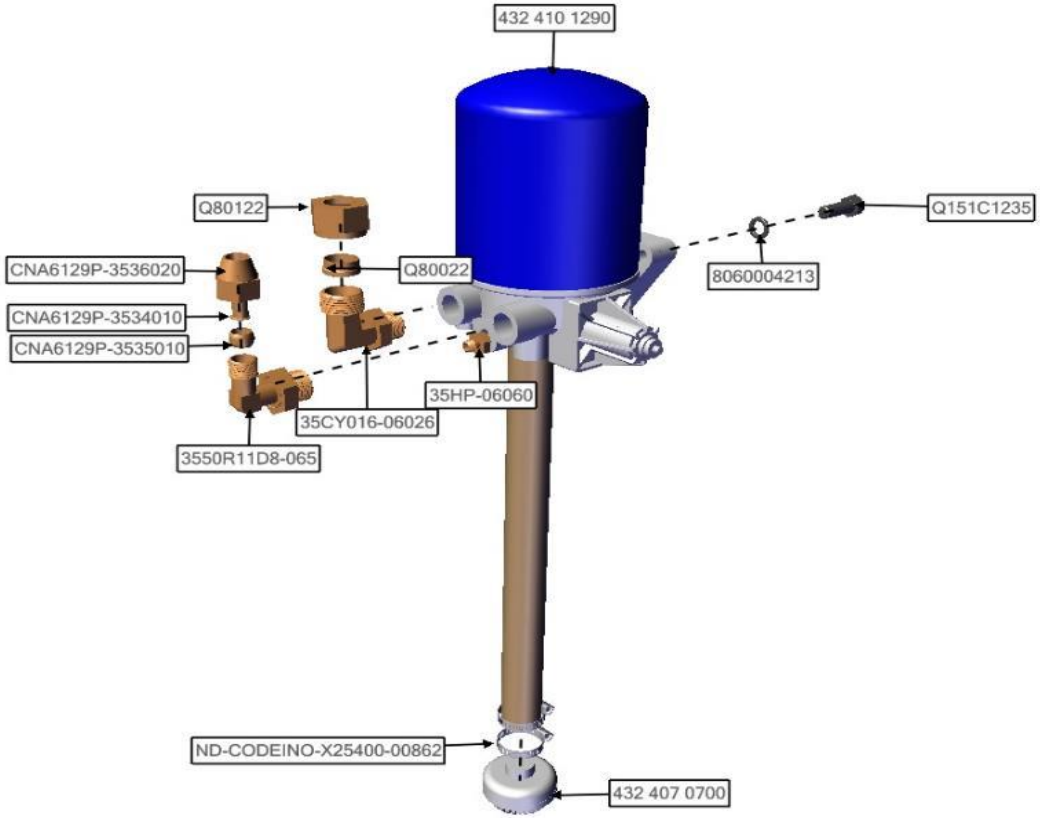


| ASSB_NAME | PART NO. | NAME | QTY |
|---|---|---|---|
| DRYER ASSY | 8060004213 | SPLIT WASHER Ø12 | 3 |
| | CNA6129P-3534010 | INNER CONNECTOR Ø12.7 | 1 |
| | Q80022 | OUTER CONNECTOR Ø22 | 1 |
| | CNA6129P-3535010 | OUTER CONNECTOR Ø12.7 | 1 |
| | Q80122 | NUT M30 | 1 |
| | CNA6129P-3536020 | NUT M18 | 1 |
| | ND-CODEINO-X25400-00862 | CLAMP 25-40 | 2 |

| ASSB_NAME | PART NO. | NAME | QTY |
|---|---|---|---|
| DRYER ASSY | 432 407 0700 | DRAIN VALVE | 1 |
| | 35HP-06060 | CONNECTOR M12-Z1/8 | 1 |
| | 35CY016-06026 | CONNECTOR M30-M22 | 1 |
| | 3550R11D8-065 | CONNECTOR M22-M18 | 1 |
| | 432 410 1290 | AIR DRYER | 1 |
| | Q151C1235 | BOLT 12035150 | 3 |
| | | | |

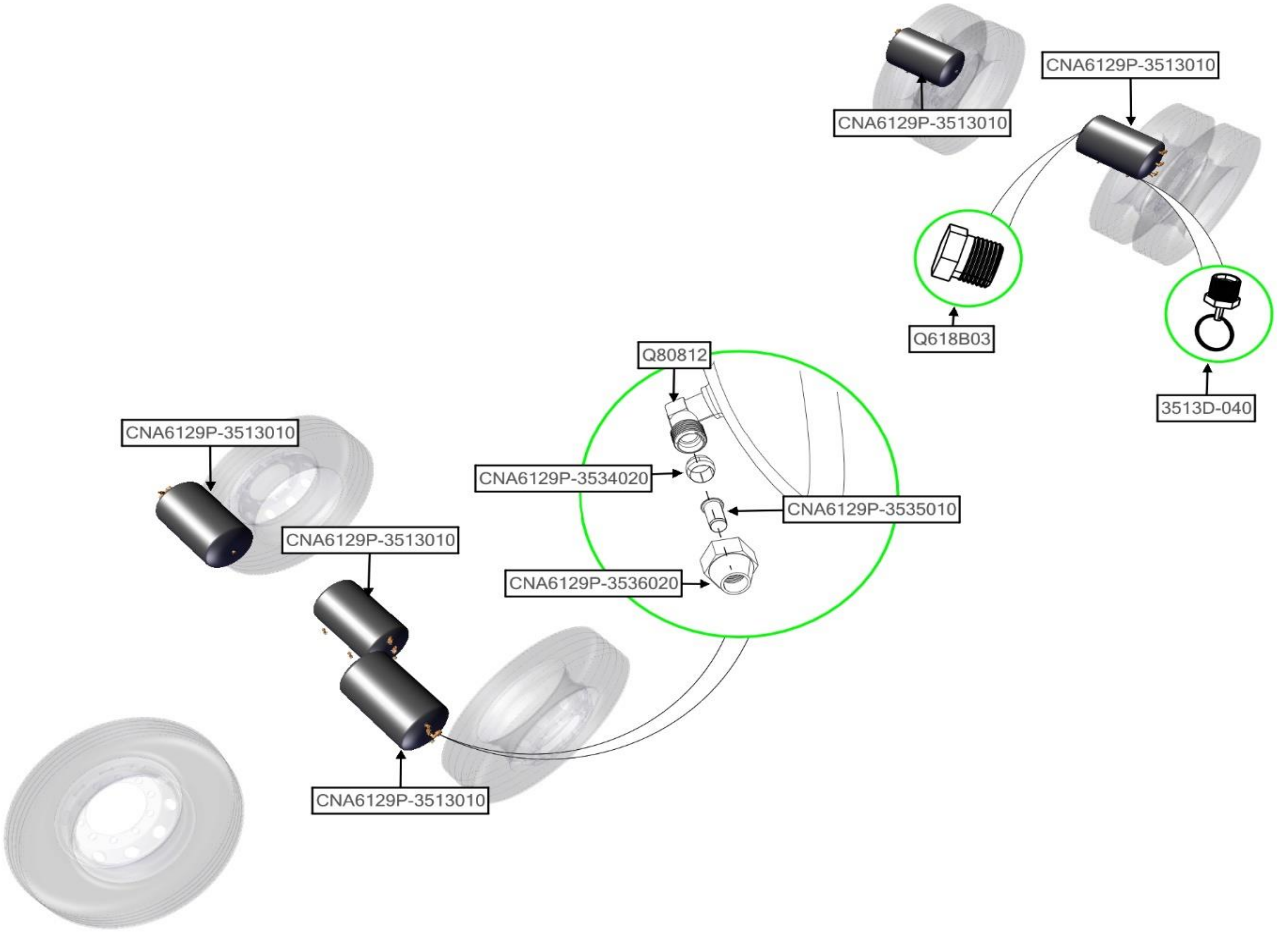


| ASSB_NAME | PART NO. | NAME | QTY |
|---|---|---|---|
| AIR TANK ASSY | 3513D-040 | DRAIN VALVE | 1 |
| | CNA6129P-3513010 | AIR TANK 30L | 5 |
| | CNA6129P-3534020 | INNER CONNECTOR Ø12.7 | 1 |
| | CNA6129P-3535010 | OUTER CONNECTOR Ø12.7 | 1 |
| | CNA6129P-3536020 | NUT M18 | 1 |
| | Q618B03 | NUT Z3/8 | 1 |
| | Q80812 | CONNECTOR M18-Z3/8 | 1 |

| ASSB_NAME | PART NO. | NAME | QTY |
|---|---|---|---|
| AIR TANK ASSY | | | |
| | | | |
| | | | |
| | | | |
| | | | |
| | | | |
| | | | |

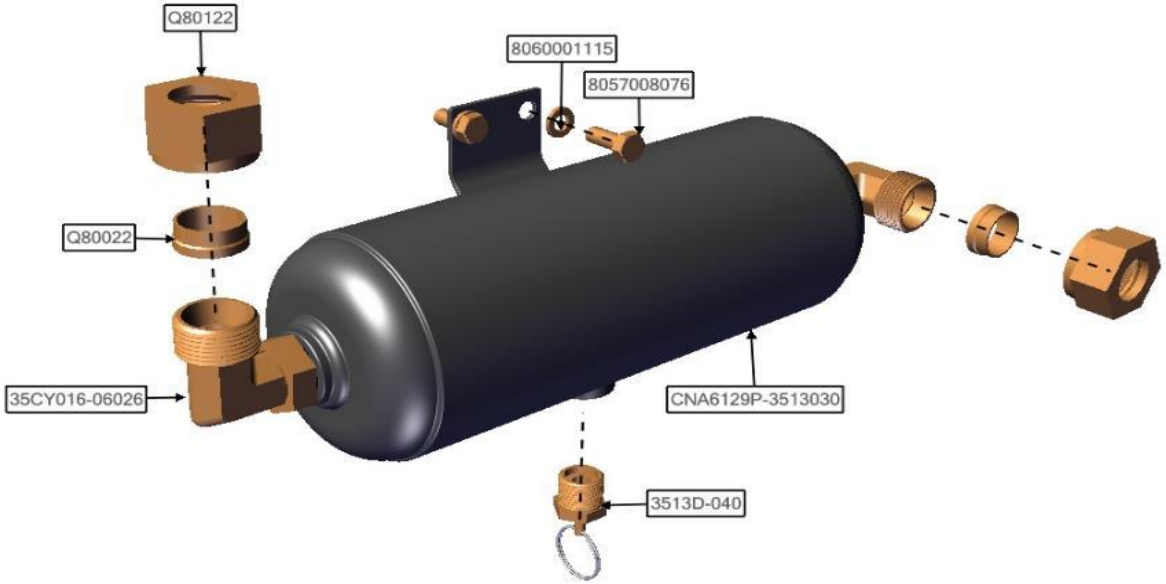


| ASSB_NAME | PART NO. | NAME | QTY |
|---|---|---|---|
| WATER EXHAUST TANK ASSY | Q80022 | OUTER CONNECTOR Ø22 | 2 |
| | Q80122 | NUT M30 | 2 |
| | 8060001115 | WASHER Ø08 | 2 |
| | 3513D-040 | DRAIN VALVE | 1 |
| | 35CY016-06026 | CONNECTOR M30-M22 | 2 |
| | CNA6129P-3513030 | WATER EXHAUST TANK | 1 |
| | 8057008076 | BOLT 08020125 | 2 |

| ASSB_NAME | PART NO. | NAME | QTY |
|---|---|---|---|
| WATER EXHAUST TANK ASSY | | | |
| | | | |
| | | | |
| | | | |
| | | | |
| | | | |
| | | | |

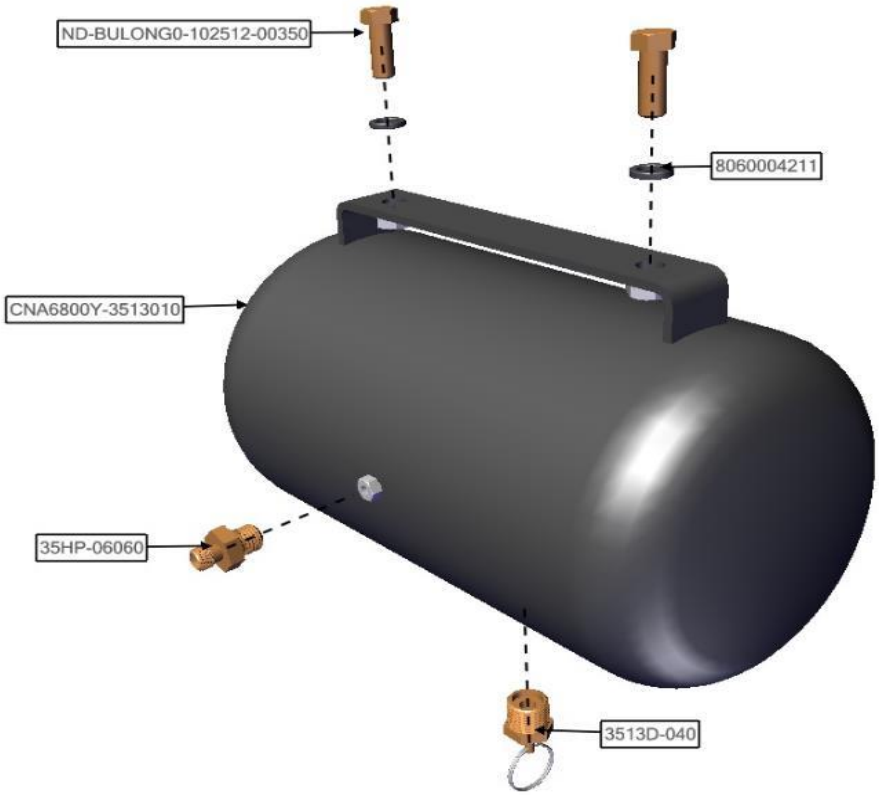


| ASSB_NAME | PART NO. | NAME | QTY |
|---|---|---|---|
| PURGE TANK ASSY | 8060004211 | SPLIT WASHER Ø10 | 2 |
| | 3513D-040 | DRAIN VALVE | 1 |
| | 35HP-06060 | CONNECTOR M12-Z1/8 | 1 |
| | CNA6800Y-3513010 | MUFFLER TANK | 1 |
| | ND-BULONG0-102512-00350 | BOLT 10045125 | 2 |
| | | | |
| | | | |

| ASSB_NAME | PART NO. | NAME | QTY |
|---|---|---|---|
| PURGE TANK ASSY | | | |
| | | | |
| | | | |
| | | | |
| | | | |
| | | | |
| | | | |

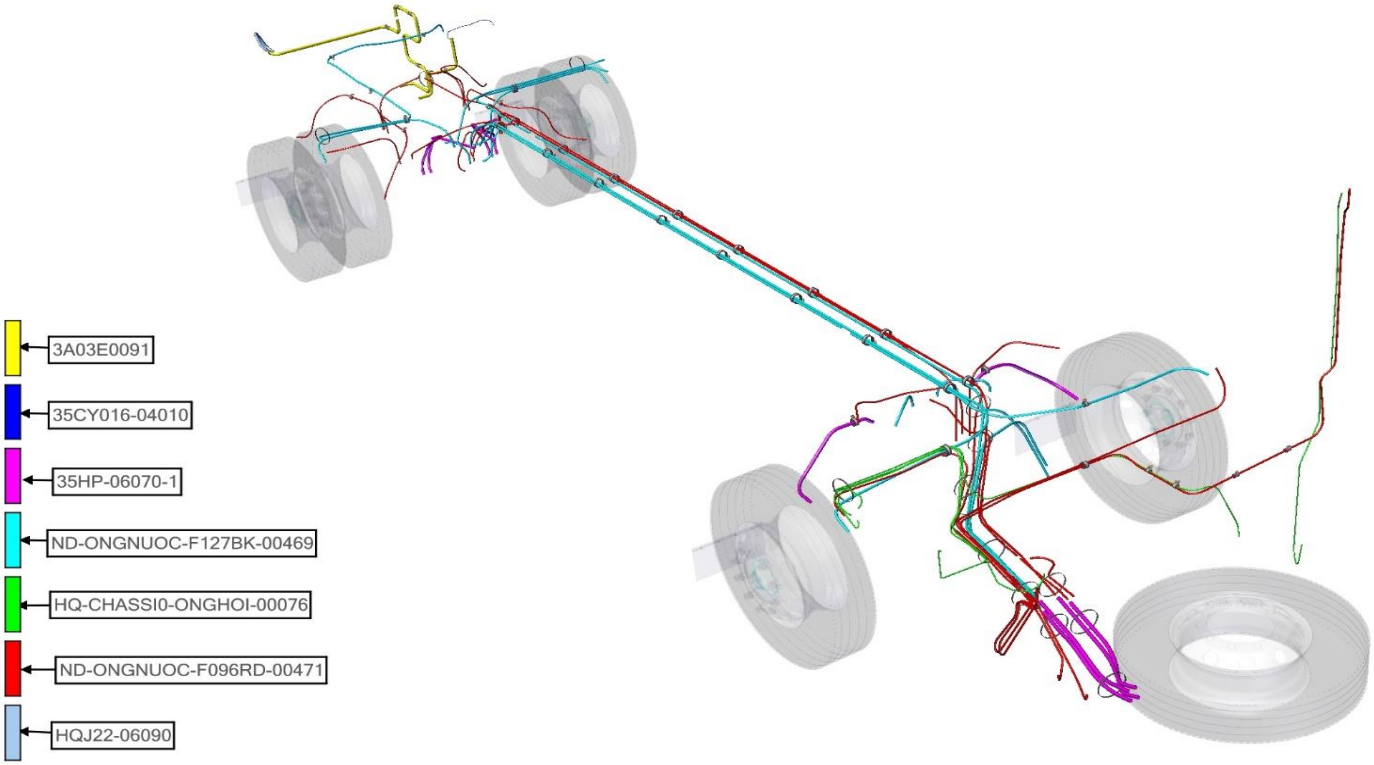


| ASSB_NAME | PART NO. | NAME | QTY |
|---|---|---|---|
| AIR PIPING | 3A03E0091 | COPPER PIPE Ø22 | 1 |
| | 35CY016-04010 | AIR PIPE - PURGE TANK | 1 |
| | 35HP-06070-1 | SPRING HYDRAULIC PIPE | 1 |
| | HQ-CHASSI0-ONGHOI-00076 | AIR PIPE 6.3 | 1 |
| | HQJ22-06090 | GRID PIPE | 1 |
| | ND-ONGNUOC-F096RD-00471 | AIR PIPE 9.6 | 1 |
| | ND-ONGNUOC-F127BK-00469 | AIR PIPE 12.7 | 1 |

| ASSB_NAME | PART NO. | NAME | QTY |
|---|---|---|---|
| AIR PIPING | | | |
| | | | |
| | | | |
| | | | |
| | | | |
| | | | |
| | | | |

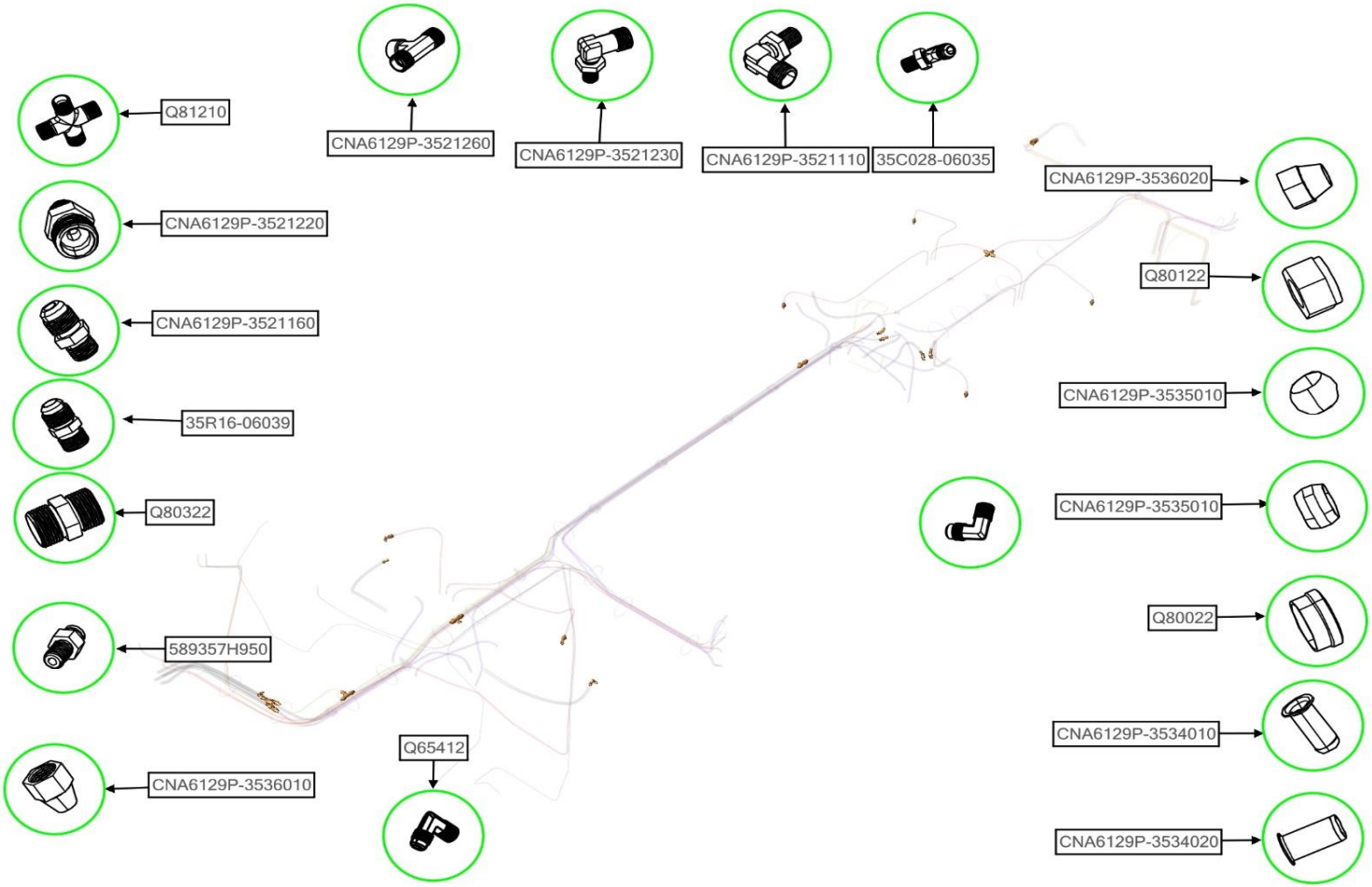


| CỤM | MÃ SỐ | TÊN LINH KIỆN | SL |
|---|---|---|---|
| CONNECTOR SYSTEM | CNA6129P-3535010 | OUTER CONNECTOR Ø9.6 | 1 |
| | CNA6129P-3534020 | INNER CONNECTOR Ø12.7 | 1 |
| | CNA6129P-3534010 | INNER CONNECTOR Ø9.6 | 1 |
| | CNA6129P-3536010 | NUT M16 | 1 |
| | CNA6129P-3535010 | OUTER CONNECTOR Ø12.7 | 1 |
| | CNA6129P-3521260 | CONNECTOR M18-M18-M14 | 1 |
| | CNA6129P-3521230 | CONNECTOR M16-M10 | 1 |

| CỤM | MÃ SỐ | TÊN LINH KIỆN | SL |
|---|---|---|---|
| CONNECTOR SYSTEM | CNA6129P-3521220 | CONNECTOR M16-M10 | 1 |
| | CNA6129P-3521160 | CONNECTOR M18-M16 | 1 |
| | 35R16-06039 | CONNECTOR M18-M18 | 1 |
| | 35C028-06035 | CONNECTOR M18-M16 | 1 |
| | Q81210 | CONNECTOR M16 | 1 |
| | Q80322 | CONNECTOR M30-M30 | 1 |
| | Q65412 | CONNECTOR M18-Z3/8 | 1 |

| ASSB_NAME | PART NO. | NAME | QTY |
|---|---|---|---|
| CONNECTOR SYSTEM | CNA6129P-3536020 | NUT M18 | 1 |
| | Q80022 | OUTER CONNECTOR Ø22 | 1 |
| | Q80122 | NUT M30 | 1 |
| | 589357H950 | CONNECTOR 6.3 | 1 |
| | CNA6129P-3521110 | CONNECTOR M16-M12 | 1 |

| ASSB_NAME | PART NO. | NAME | QTY |
|---|---|---|---|
| CONNECTOR SYSTEM | | | |

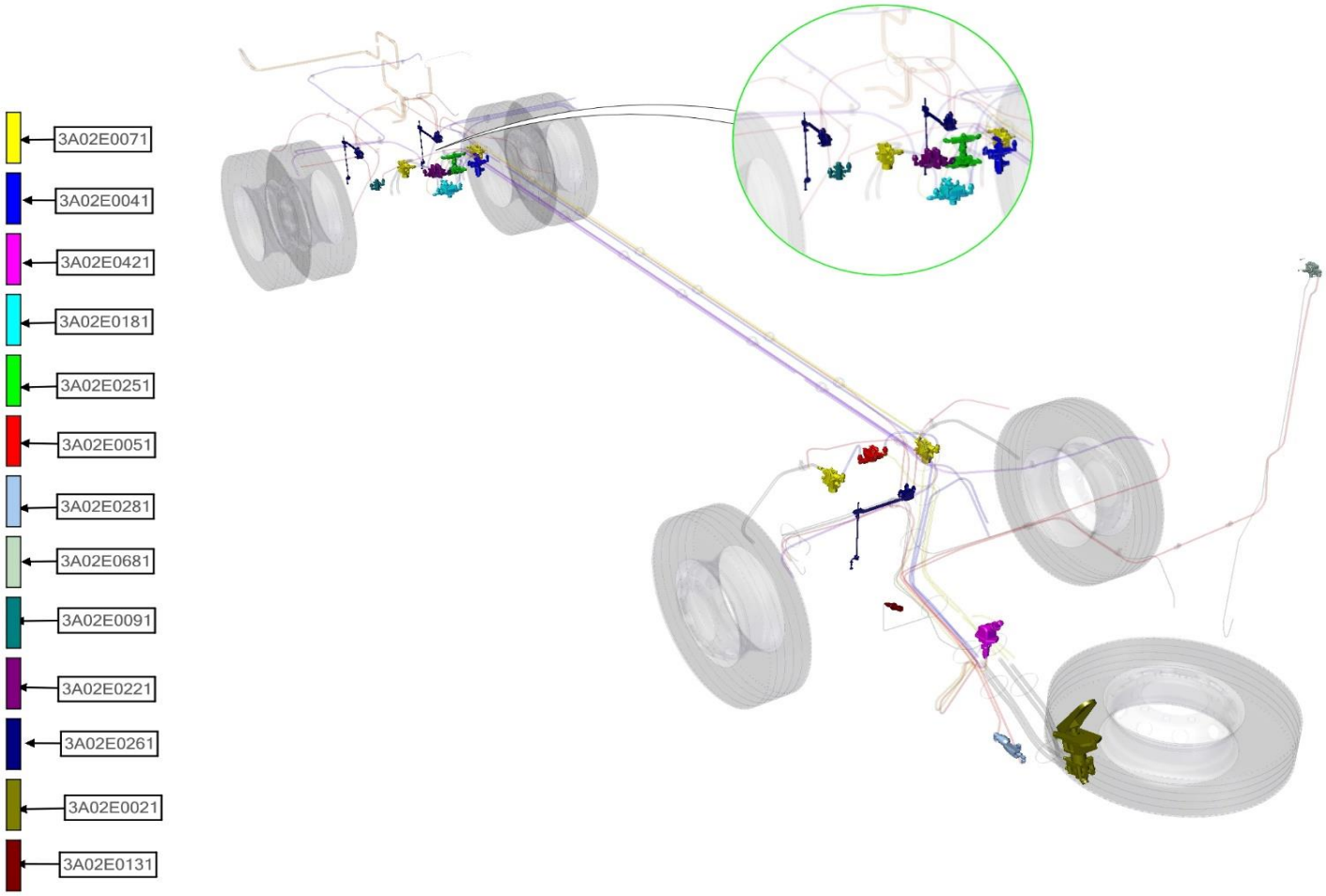


| ASSB_NAME | PART NO. | NAME | QTY |
|---|---|---|---|
| AIR VALVE | 3A02E0021 | BRAKE VALVE ASSY | 1 |
| | 3A02E0041 | ASR VAVLE ASSY | 1 |
| | 3A02E0051 | FRONT DISTRIBUTOR VALVE ASSY | 1 |
| | 3A02E0071 | ABS VALVE ASSY | 1 |
| | 3A02E0091 | CHECK VALVE ASSY | 1 |
| | 3A02E0131 | QUICK-RELEASE COUPLING ASSY | 1 |
| | 3A02E0181 | REAR DISTRIBUTOR VALVE ASSY | 1 |

| ASSB_NAME | PART NO. | NAME | QTY |
|---|---|---|---|
| AIR VALVE | 3A02E0221 | CHECK VALVE ASSY | |
| | 3A02E0251 | CLEAVAGE VALVE ASSY | |
| | 3A02E0261 | LOADING VALVE ASSY | |
| | 3A02E0281 | EMERGENCY VALVE ASSY | |
| | 3A02E0421 | HAND BRAKE LEVER ASSY | |
| | 3A02E0681 | EMERGENCY VALVE ASSY | |
| | | | |

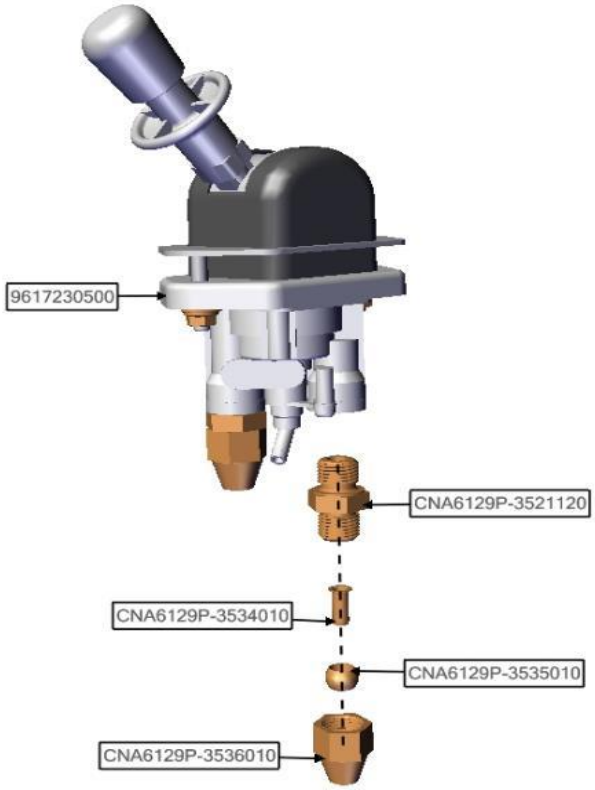


| ASSB_NAME | PART NO. | NAME | QTY |
|---|---|---|---|
| BRAKE VALVE ASSY | CNA6129P-3534010 | INNER CONNECTOR Ø9.6 | 1 |
| | CNA6129P-3535010 | OUTER CONNECTOR Ø9.6 | 1 |
| | CNA6129P-3536010 | NUT M16 | 1 |
| | CNA6129P-3521120 | CONNECTOR M16-M16 | 1 |
| | 9617230500 | PARKING BRAKE SHAFT | 1 |
| | | | |
| | | | |

| ASSB_NAME | PART NO. | NAME | QTY |
|---|---|---|---|
| BRAKE VALVE ASSY | | | |
| | | | |
| | | | |
| | | | |
| | | | |
| | | | |
| | | | |

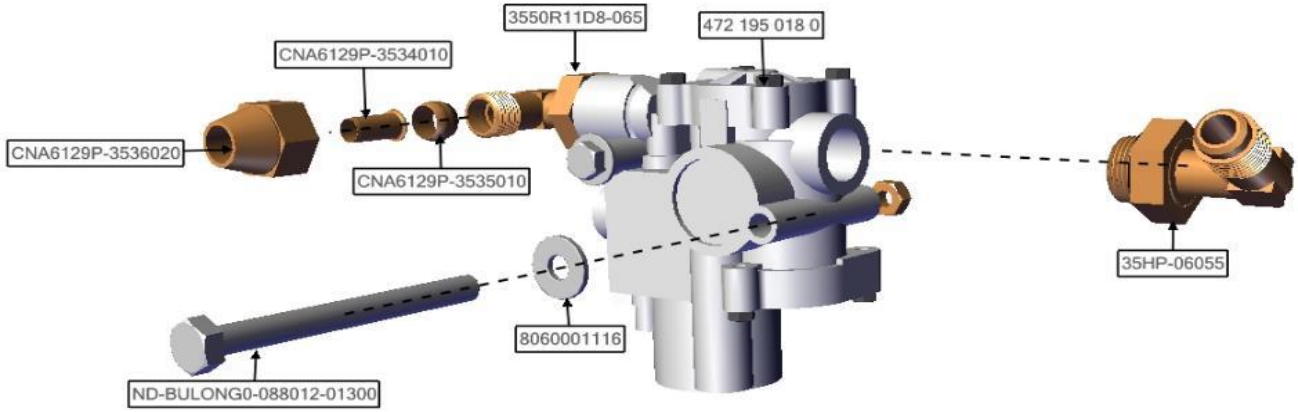


| ASSB_NAME | PART NO. | NAME | QTY |
|---|---|---|---|
| ABS VALVE ASSY | CNA6129P-3534010 | INNER CONNECTOR Ø12.7 | 1 |
| | CNA6129P-3535010 | OUTER CONNECTOR Ø9.6 | 1 |
| | CNA6129P-3536020 | NUT M18 | 1 |
| | 8060001116 | WASHER Ø08 | 2 |
| | 472 195 018 0 | ABS VALVE | 1 |
| | 35HP-06055 | CONNECTOR M22-M18 | 1 |
| | 3550R11D8-065 | CONNECTOR M22-M18 | 1 |

| ASSB_NAME | PART NO. | NAME | QTY |
|---|---|---|---|
| ABS VALVE ASSY | ND-BULONG0-088012-01300 | BU LÔNG 08080125 | 1 |
| | | | |
| | | | |
| | | | |
| | | | |
| | | | |
| | | | |

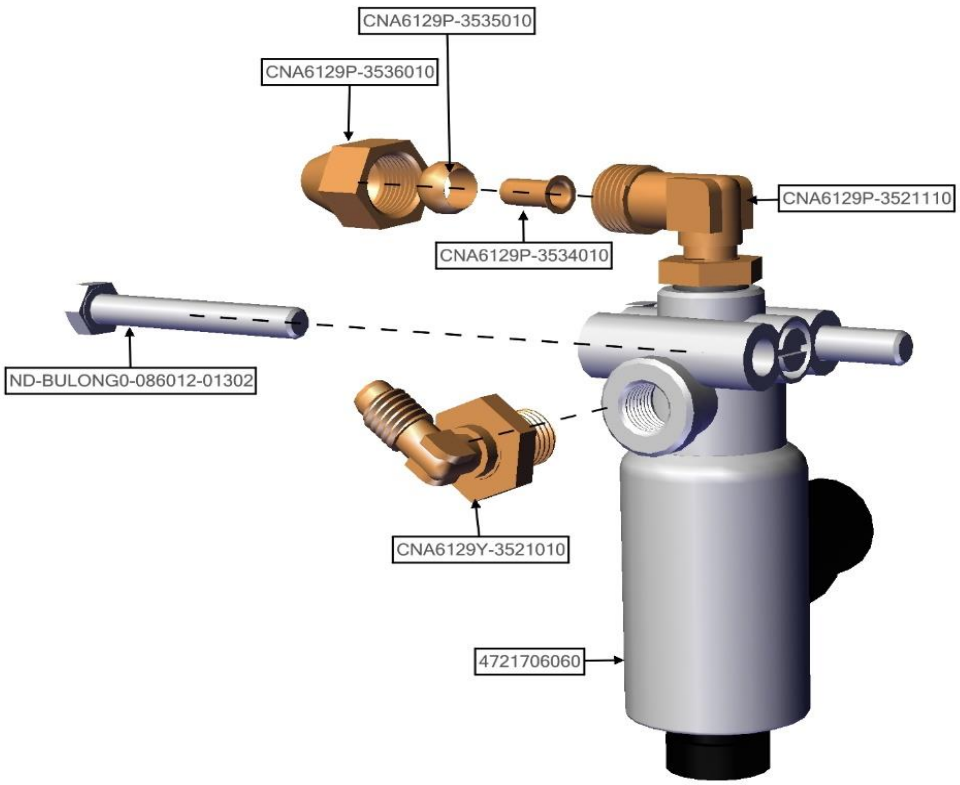


| ASSB_NAME | PART NO. | NAME | QTY |
|---|---|---|---|
| ASR VAVLE ASSY | CNA6129P-3534010 | INNER CONNECTOR Ø9.6 | 1 |
| | CNA6129P-3535010 | OUTER CONNECTOR Ø9.6 | 1 |
| | CNA6129P-3536010 | NUT M16 | 1 |
| | 8059000094 | NUT 08125 | 2 |
| | 8060001117 | WASHER Ø08 | 2 |
| | 4721706060 | ASR VALVE | 1 |
| | 4342080290 | JUCTION VALVE | 1 |

| ASSB_NAME | PART NO. | NAME | QTY |
|---|---|---|---|
| ASR VAVLE ASSY | CNA6129P-3521080 | CONNECTOR M22-M16 | 3 |
| | CNA6129P-3521110 | CONNECTOR M16-M12 | 2 |
| | ND-BULONG0-053012-00757 | BOLT 08070125 | 1 |
| | ND-BULONG0-086012-01302 | BOLT 08060125 | 1 |
| | | | |
| | | | |
| | | | |

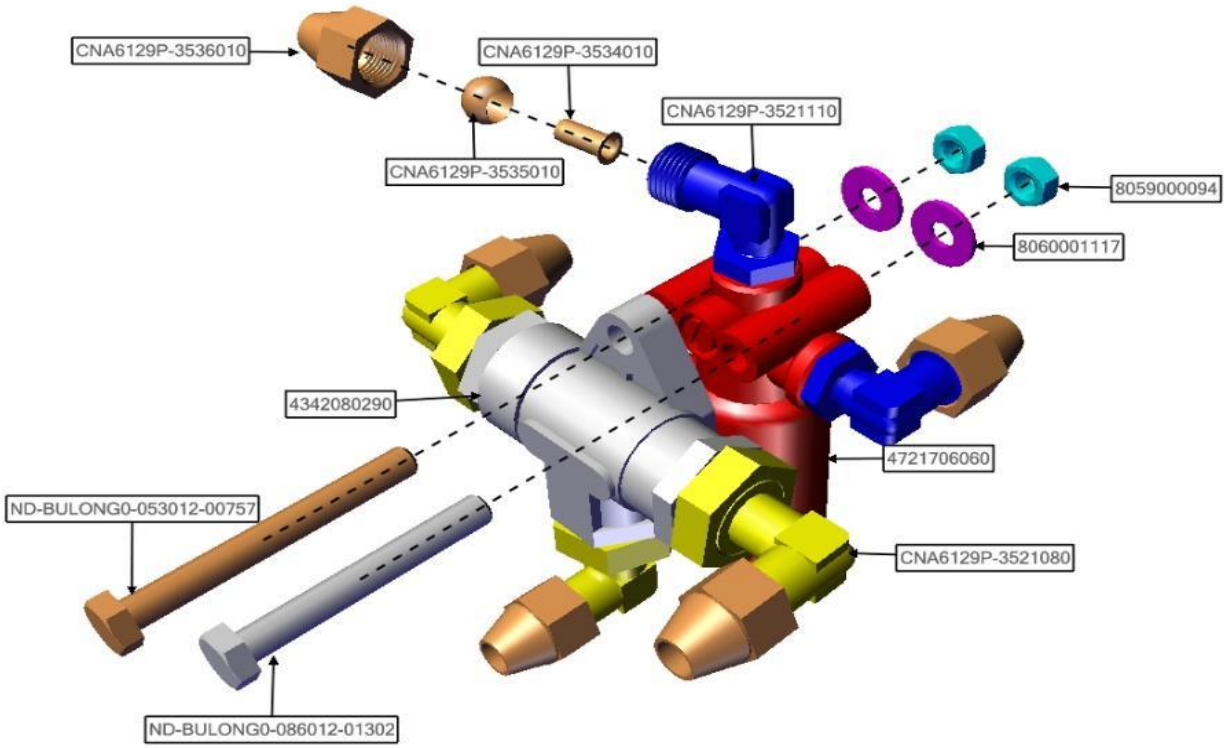


| ASSB_NAME | PART NO. | NAME | QTY |
|---|---|---|---|
| CLEAVAGE VALVE ASSY | CNA6129P-3534010 | INNER CONNECTOR Ø9.6 | 1 |
| | CNA6129P-3535010 | OUTER CONNECTOR Ø9.6 | 1 |
| | CNA6129P-3536010 | NUT M16 | 1 |
| | CNA6129P-3521110 | CONNECTOR M16-M12 | 1 |
| | CNA6129Y-3521010 | CONNECTOR M12-M10 | 1 |
| | ND-BULONG0-086012-01302 | BOLT 08060125 | 2 |
| | | | |

| ASSB_NAME | PART NO. | NAME | QTY |
|---|---|---|---|
| CLEAVAGE VALVE ASSY | | | |
| | | | |
| | | | |
| | | | |
| | | | |
| | | | |
| | | | |

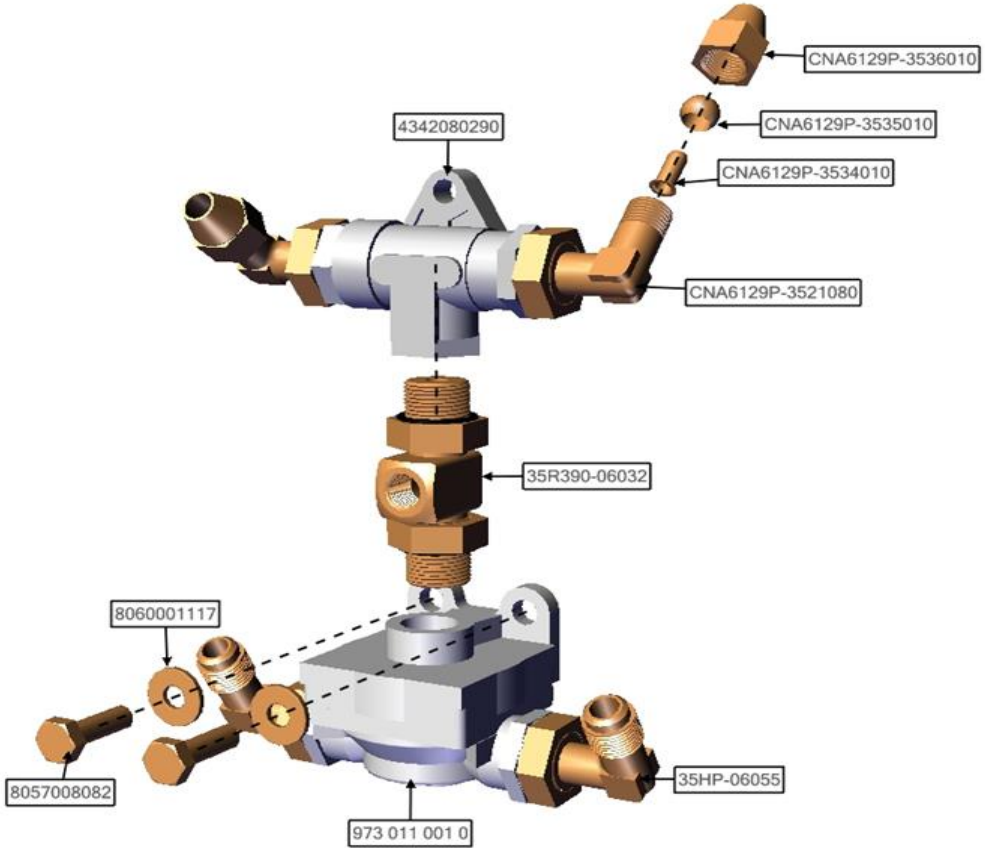


| ASSB_NAME | PART NO. | NAME | QTY |
|---|---|---|---|
| REAR DISTRIBUTOR VALVE ASSY | CNA6129P-3534010 | INNER CONNECTOR Ø9.6 | 1 |
| | CNA6129P-3535010 | OUTER CONNECTOR Ø9.6 | 1 |
| | CNA6129P-3536010 | NUT M16 | 1 |
| | 8060001117 | WASHER Ø08 | 2 |
| | 973 011 001 0 | DRAIN VALVE | 1 |
| | 4342080290 | JUCTION VALVE | 1 |
| | 35HP-06055 | CONNECTOR M22-M18 | 2 |

| ASSB_NAME | PART NO. | NAME | QTY |
|---|---|---|---|
| REAR DISTRIBUTOR VALVE ASSY | CNA6129P-3521080 | CONNECTOR M22-M16 | 2 |
| | 35R390-06032 | CONNECTOR M22-M22-Z1/8 | 1 |
| | 8057008082 | BOLT 08025125 | 2 |
| | | | |
| | | | |
| | | | |
| | | | |

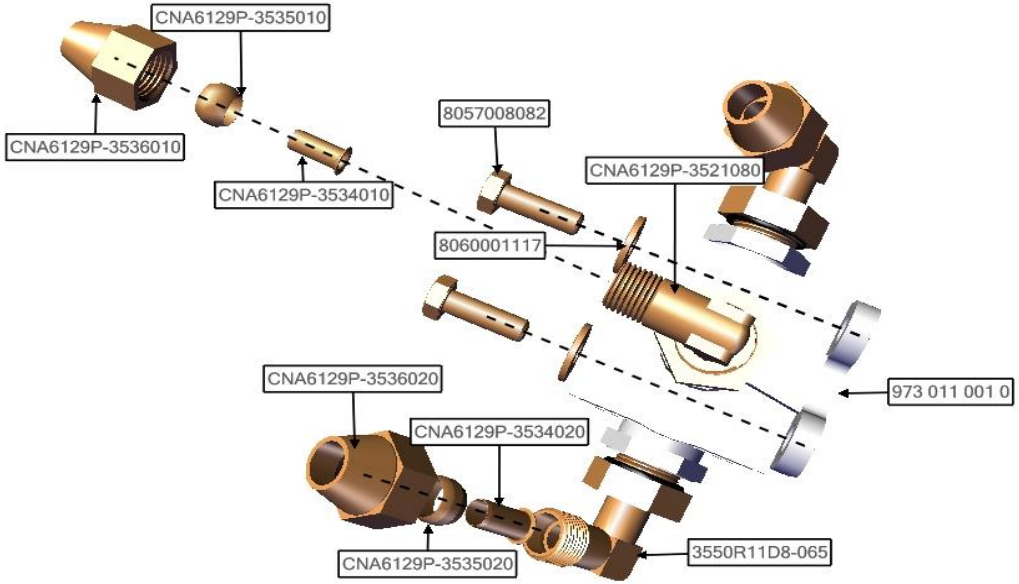


| ASSB_NAME | PART NO. | NAME | QTY |
|---|---|---|---|
| FRONT DISTRIBUTOR VALVE ASSY | CNA6129P-3534020 | INNER CONNECTOR Ø12.7 | 1 |
| | CNA6129P-3534010 | INNER CONNECTOR Ø9.6 | 1 |
| | CNA6129P-3535020 | OUTER CONNECTOR Ø9.6 | 1 |
| | CNA6129P-3535010 | OUTER CONNECTOR Ø9.6 | 1 |
| | CNA6129P-3536020 | NUT M18 | 1 |
| | CNA6129P-3536010 | NUT M16 | 1 |
| | 8060001117 | WASHER Ø08 | 2 |

| ASSB_NAME | PART NO. | NAME | QTY |
|---|---|---|---|
| FRONT DISTRIBUTOR VALVE ASSY | 973 011 001 0 | DRAIN VALVE | 1 |
| | 3550R11D8-065 | CONNECTOR M22-M18 | 2 |
| | CNA6129P-3521080 | CONNECTOR M22-M16 | 1 |
| | 8057008082 | BOLT 08025125 | 2 |
| | | | |
| | | | |
| | | | |

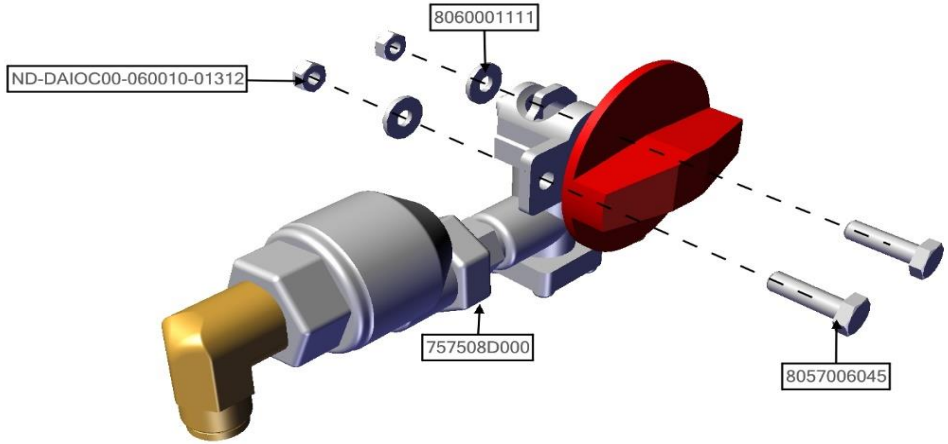


| ASSB_NAME | PART NO. | NAME | QTY |
|---|---|---|---|
| EMERGENCY VALVE ASSY | ND-DAIOC00-060010-01312 | NUT 06100 | 2 |
| | 8060001111 | WASHER Ø06 | 2 |
| | 757508D000 | EMERGENCY VALVE | 1 |
| | 8057006045 | BOLT 06020100 | 2 |
| | | | |
| | | | |
| | | | |

| ASSB_NAME | PART NO. | NAME | QTY |
|---|---|---|---|
| EMERGENCY VALVE ASSY | | | |
| | | | |
| | | | |
| | | | |
| | | | |
| | | | |
| | | | |

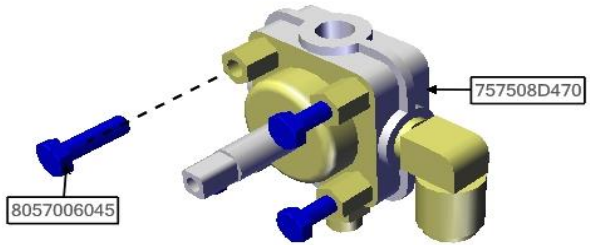


| ASSB_NAME | PART NO. | NAME | QTY |
|---|---|---|---|
| EMERGENCY VALVE ASSY | 757508D470 | ABOVE EMERGENCY VALVE | 1 |
| | 8057006045 | BOLT 06020100 | 4 |
| | | | |
| | | | |
| | | | |
| | | | |
| | | | |

| ASSB_NAME | PART NO. | NAME | QTY |
|---|---|---|---|
| EMERGENCY VALVE ASSY | | | |
| | | | |
| | | | |
| | | | |
| | | | |
| | | | |
| | | | |

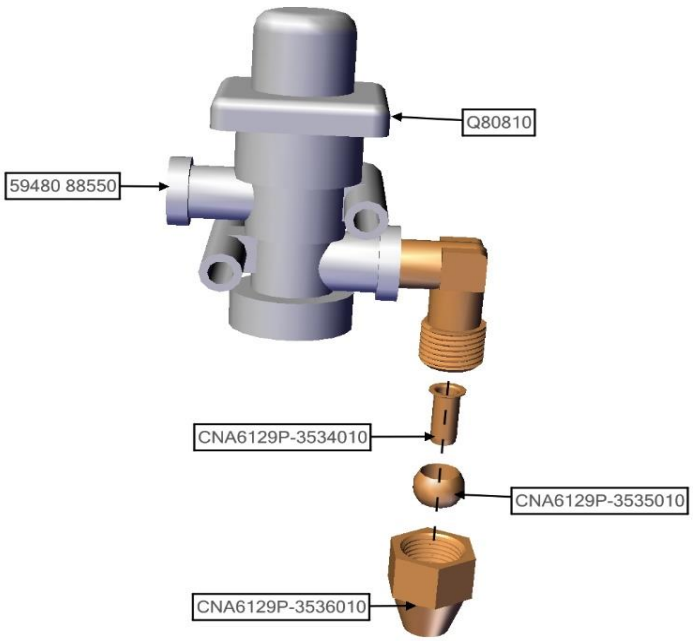


| ASSB_NAME | PART NO. | NAME | QTY |
|---|---|---|---|
| CHECK VALVE ASSY | CNA6129P-3534010 | INNER CONNECTOR Ø9.6 | 1 |
| | CNA6129P-3535010 | OUTER CONNECTOR Ø9.6 | 1 |
| | CNA6129P-3536010 | NUT M16 | 1 |
| | Q80810 | CONNECTOR M16-Z1/4 | 1 |
| | | | |
| | | | |
| | | | |

| ASSB_NAME | PART NO. | NAME | QTY |
|---|---|---|---|
| CHECK VALVE ASSY | | | |
| | | | |
| | | | |
| | | | |
| | | | |
| | | | |
| | | | |

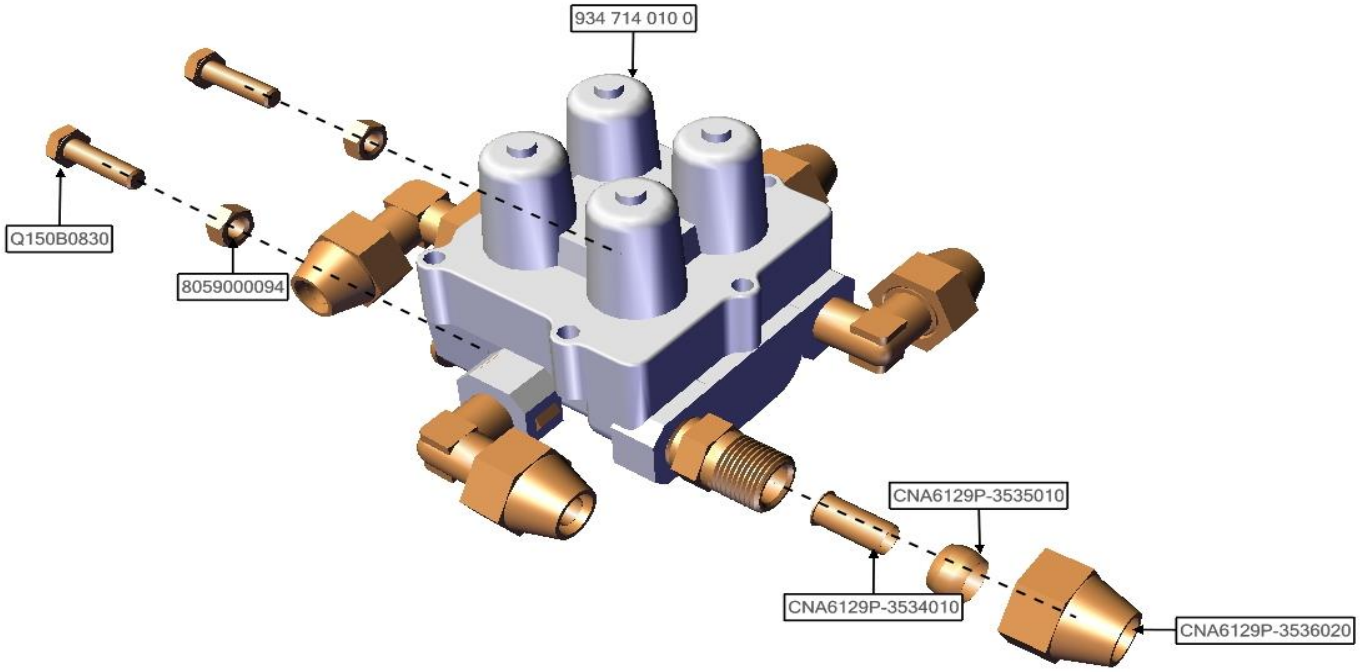


| ASSB_NAME | PART NO. | NAME | QTY |
|---|---|---|---|
| TOTAL CHECK VALVE ASSY | CNA6129P-3534010 | INNER CONNECTOR Ø12.7 | 5 |
| | CNA6129P-3535010 | OUTER CONNECTOR Ø9.6 | 5 |
| | CNA6129P-3536020 | NUT M18 | 5 |
| | 8059000094 | NUT 08125 | 2 |
| | 934 714 010 0 | TOTAL CHECK VALVE | 1 |
| | Q150B0830 | BOLT 08030125 | 2 |
| | | | |

| ASSB_NAME | PART NO. | NAME | QTY |
|---|---|---|---|
| TOTAL CHECK VALVE ASSY | | | |
| | | | |
| | | | |
| | | | |
| | | | |
| | | | |
| | | | |

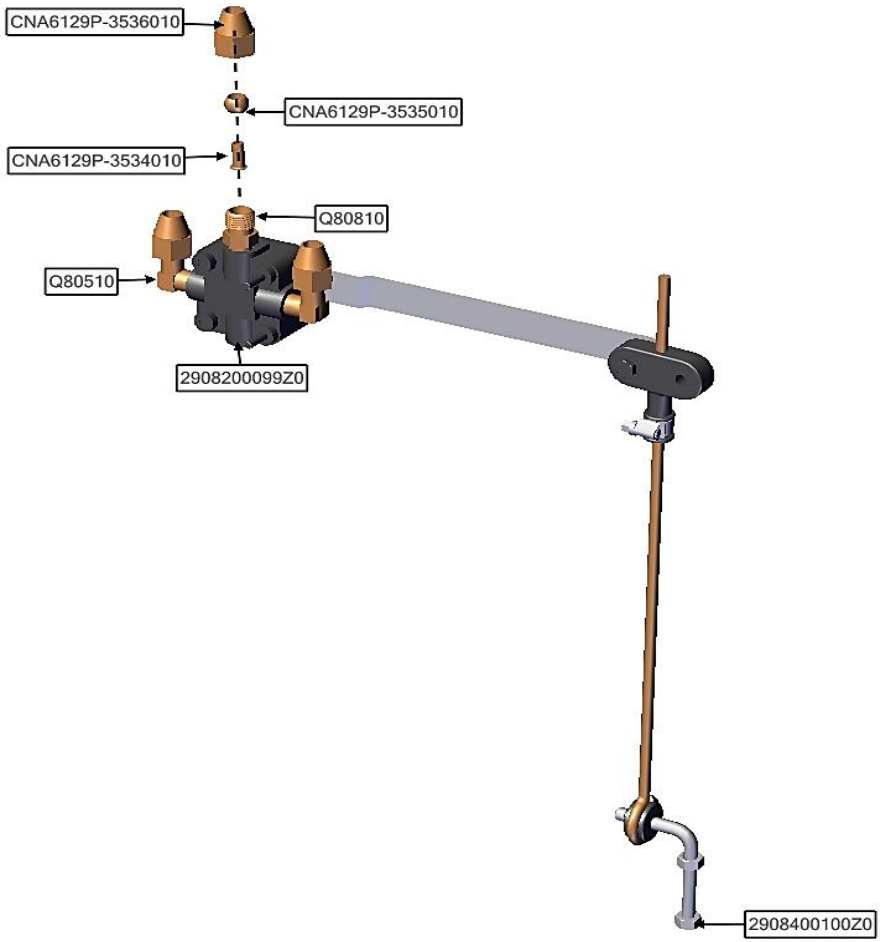


| ASSB_NAME | PART NO. | NAME | QTY |
|---|---|---|---|
| LOADING VALVE ASSY | CNA6129P-3534010 | INNER CONNECTOR Ø9.6 | 1 |
| | CNA6129P-3535010 | OUTER CONNECTOR Ø9.6 | 1 |
| | CNA6129P-3536010 | NUT M16 | 1 |
| | 2908200099Z0 | AIR SUSPENSION LEVELING VALVE | 1 |
| | Q80510 | CONNECTOR M16-Z1/4 | 1 |
| | Q80810 | CONNECTOR M16-Z1/4 | 2 |
| | 2908400100Z0 | AIR SUSPENSION LEVELING VALVE SHAFT | 1 |

| ASSB_NAME | PART NO. | NAME | QTY |
|---|---|---|---|
| LOADING VALVE ASSY | | | |
| | | | |
| | | | |
| | | | |
| | | | |
| | | | |
| | | | |

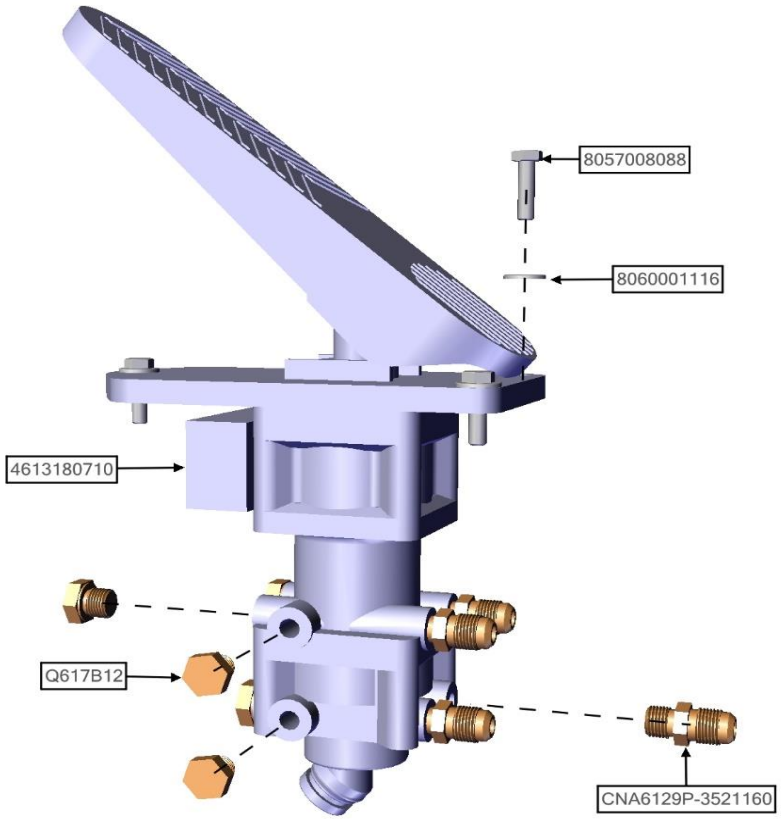


| ASSB_NAME | PART NO. | NAME | QTY |
|---|---|---|---|
| BRAKE VALVE ASSY | 4613180710 | BRAKE VALVE | 1 |
| | 8057008088 | BOLT 08030125 | 3 |
| | 8060001116 | WASHER Ø08 | 3 |
| | CNA6129P-3521160 | CONNECTOR M18-M16 | 4 |
| | Q617B12 | NUT M12 | 2 |
| | | | |
| | | | |

| ASSB_NAME | PART NO. | NAME | QTY |
|---|---|---|---|
| CONTROLING VALVE ASSY | | | |
| | | | |
| | | | |
| | | | |
| | | | |
| | | | |
| | | | |

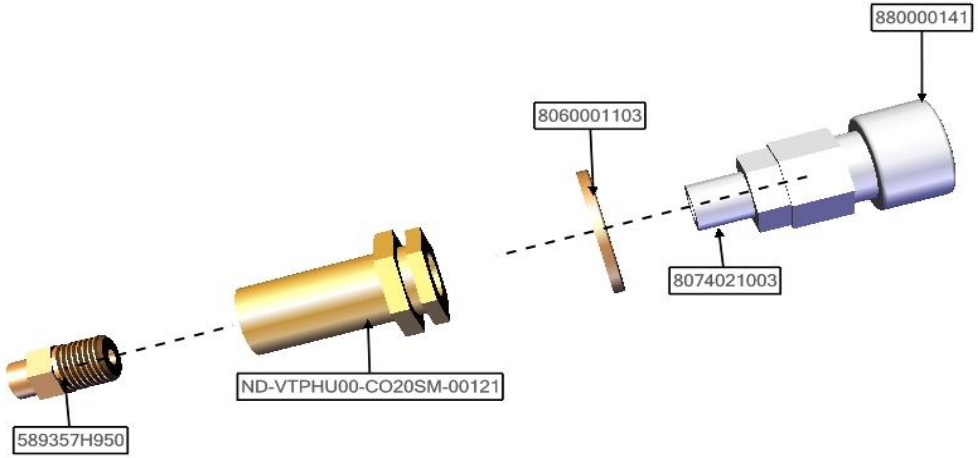


| ASSB_NAME | PART NO. | NAME | QTY |
|---|---|---|---|
| CLEAVAGE VALVE ASSY | ND-VTPHU00-CO20SM-00121 | CLIP | 1 |
| | 8060001103 | WASHER Ø20 | 1 |
| | 589357H950 | CONNECTOR | 1 |
| | 880000141 | QUICK CONNECTOR | 1 |
| | 8074021003 | 20SM | 1 |
| | | | |
| | | | |

| ASSB_NAME | PART NO. | NAME | QTY |
|---|---|---|---|
| CLEAVAGE VALVE ASSY | | | |
| | | | |
| | | | |
| | | | |
| | | | |
| | | | |
| | | | |

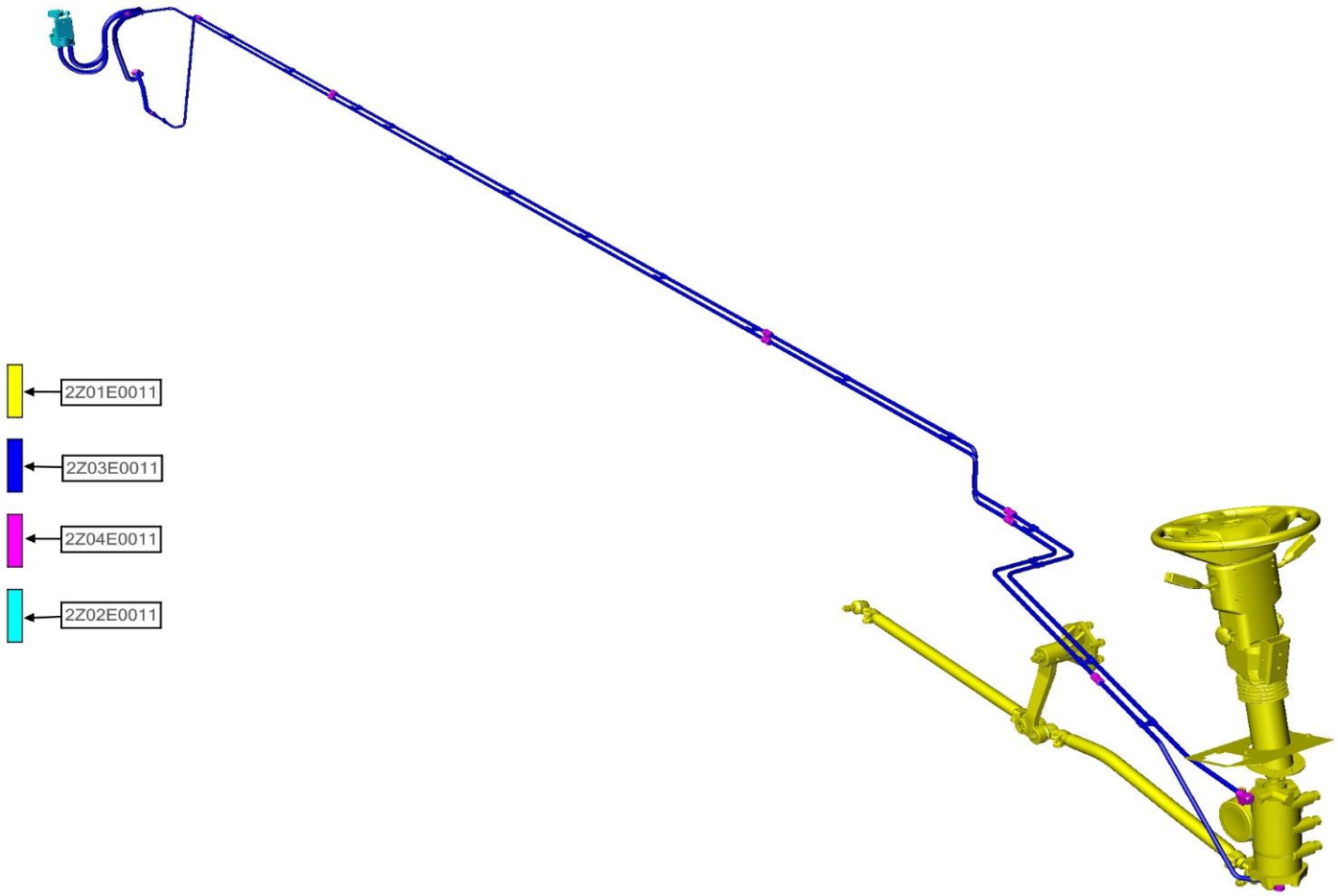


| ASSB_NAME | PART NO. | NAME | QTY |
|---|---|---|---|
| STEERING SYSTEM | 2Z01E0011 | STEERING DRIVE ASSY | 1 |
| | 2Z02E0011 | THE POWER STEERING | 1 |
| | 2Z03E0011 | STEERING SUPPORT PIPE ASSY | 1 |
| | 2Z04E0011 | CONNECTOR SYSTEM | 1 |
| | | | |
| | | | |
| | | | |

| ASSB_NAME | PART NO. | NAME | QTY |
|---|---|---|---|
| STEERING SYSTEM | | | |
| | | | |
| | | | |
| | | | |
| | | | |
| | | | |
| | | | |

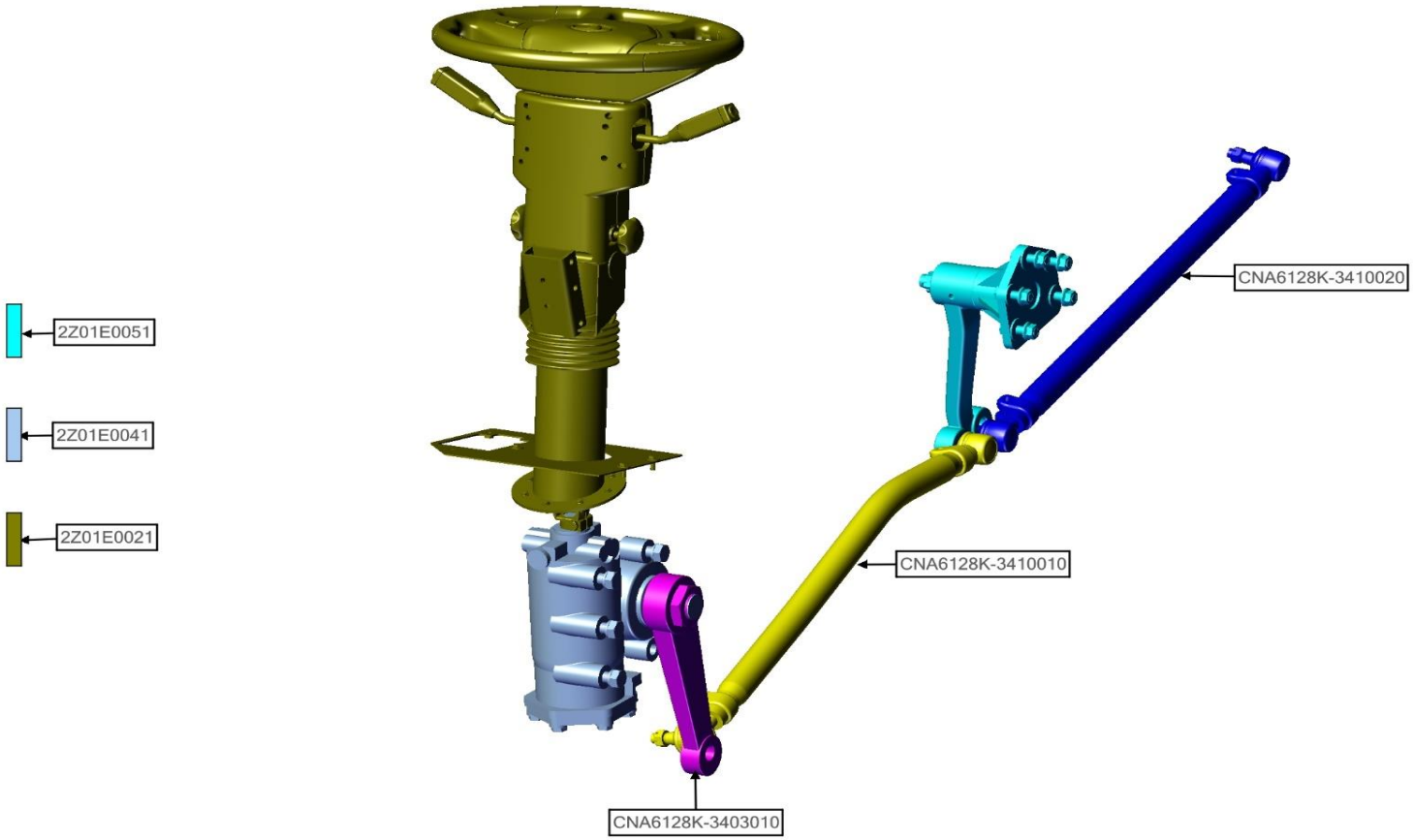


| ASSB_NAME | PART NO. | NAME | QTY |
|---|---|---|---|
| STEERING DRIVE ASSY | 2Z01E0021 | STEERING SHAFT ASSY | 1 |
| | 2Z01E0041 | STEERING BOX ASSY | 1 |
| | 2Z01E0051 | STEERING ARM ASSY | 1 |
| | CNA6128K-3403010 | STEERING ARM ASSY | 1 |
| | CNA6128K-3410010 | STEERING POLE 01 | 1 |
| | CNA6128K-3410020 | STEERING POLE 02 | 1 |
| | | | |

| ASSB_NAME | PART NO. | NAME | QTY |
|---|---|---|---|
| STEERING DRIVE ASSY | | | |
| | | | |
| | | | |
| | | | |
| | | | |
| | | | |
| | | | |

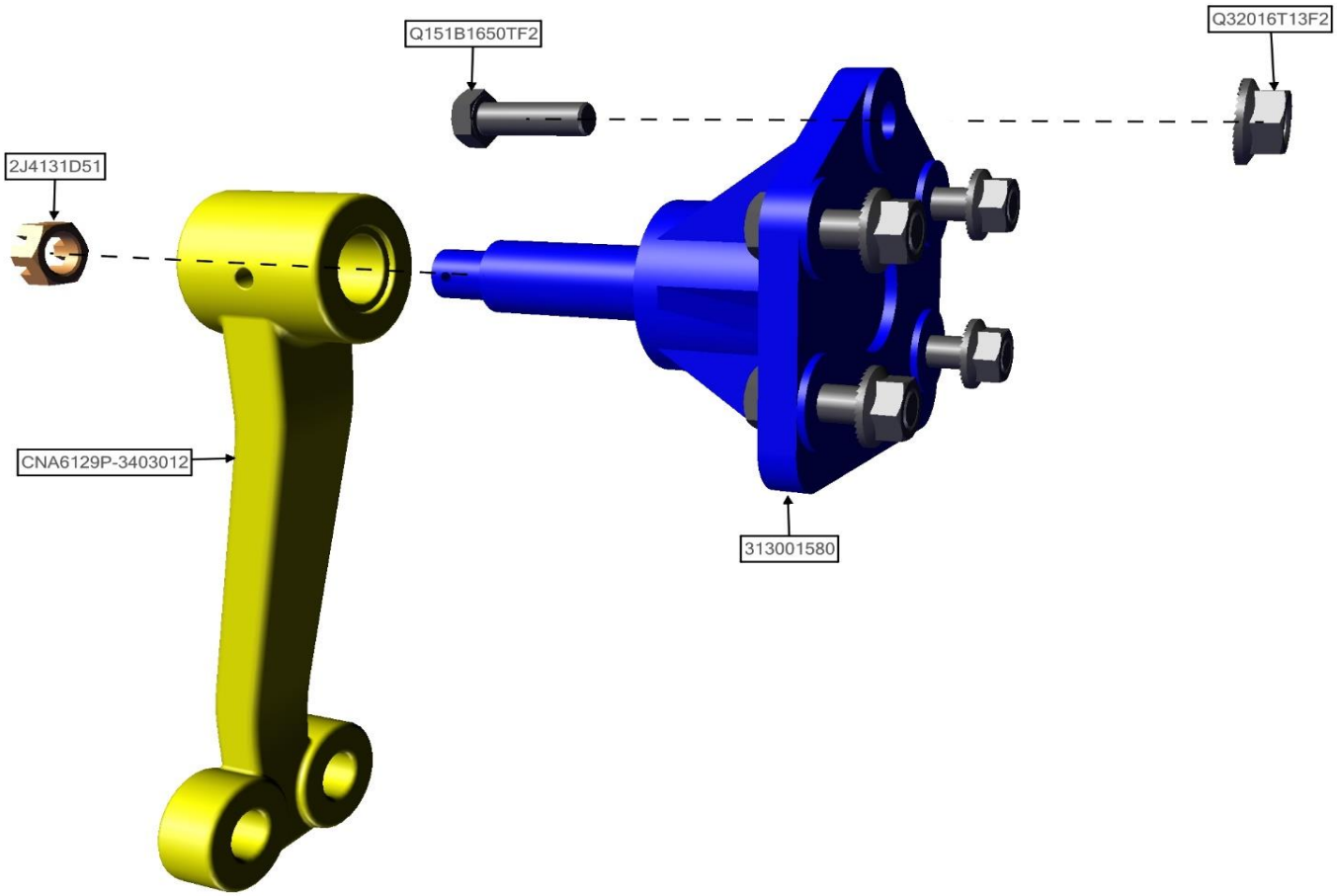


| ASSB_NAME | PART NO. | NAME | QTY |
|---|---|---|---|
| STEERING ARM ASSY | 2J4131D51 | NUT 24150 | 1 |
| | 313001580 | BRACKET | 1 |
| | CNA6129P-3403012 | STEERING ARM | 1 |
| | Q151B1650TF2 | BOLT 16050150 | 5 |
| | Q32016T13F2 | NUT 16175 | 5 |
| | | | |
| | | | |

| ASSB_NAME | PART NO. | NAME | QTY |
|---|---|---|---|
| STEERING ARM ASSY | | | |
| | | | |
| | | | |
| | | | |
| | | | |
| | | | |
| | | | |

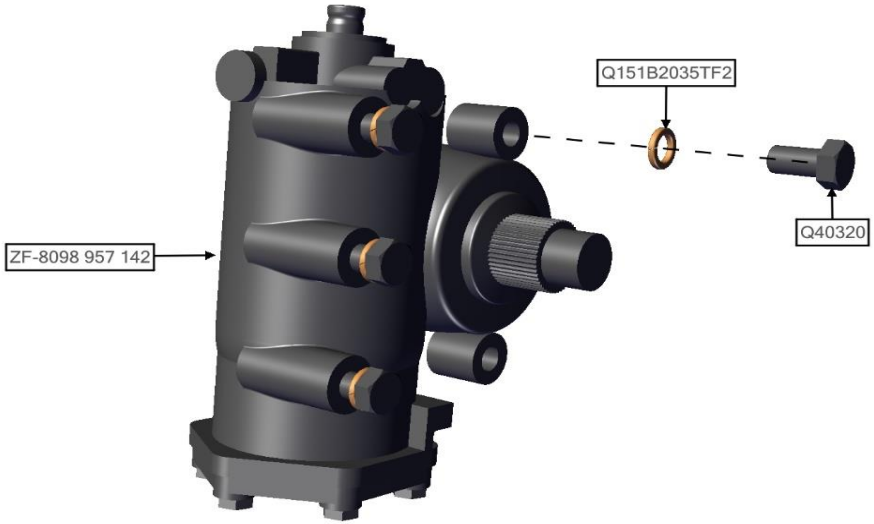


| ASSB_NAME | PART NO. | NAME | QTY |
|---|---|---|---|
| STEERING BOX ASSY | Q151B2035TF2 | BOLT 20035150 | 4 |
| | Q40320 | SPLIT WASHER Ø20 | 4 |
| | ZF-8098 957 142 | STEERING BOX | 1 |
| | | | |
| | | | |
| | | | |
| | | | |

| ASSB_NAME | PART NO. | NAME | QTY |
|---|---|---|---|
| STEERING BOX ASSY | | | |
| | | | |
| | | | |
| | | | |
| | | | |
| | | | |
| | | | |

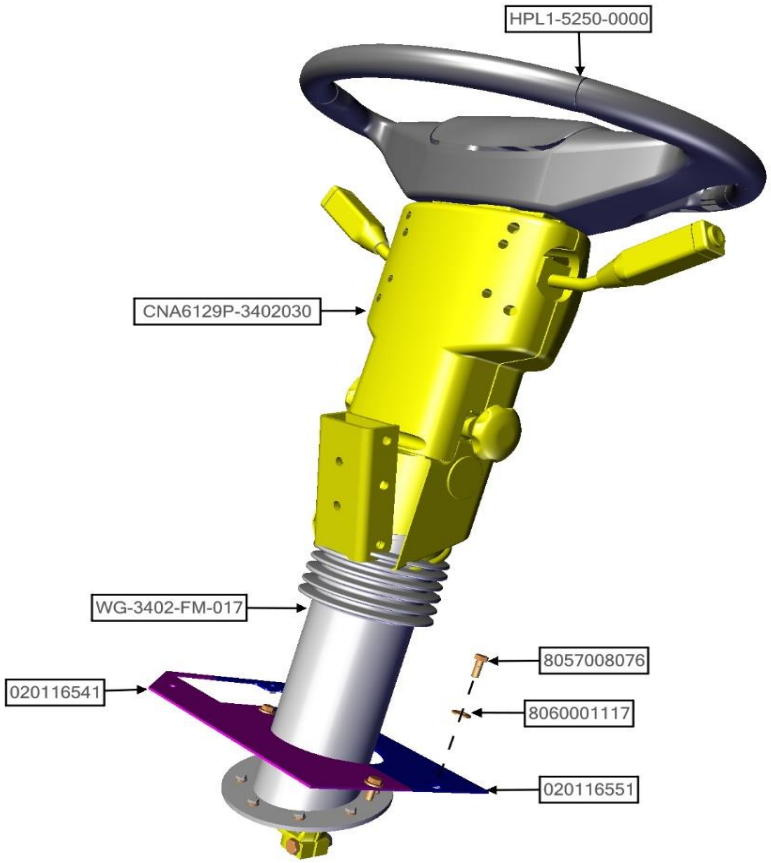


| ASSB_NAME | PART NO. | NAME | QTY |
|---|---|---|---|
| STEERING SHAFT ASSY | 020116541 | DUAL BRAKE BRACKET | 1 |
| | 020116551 | DUAL BRAKE BRACKET | 1 |
| | CNA6129P-3402030 | STEERING SHAFT | 1 |
| | 8057008076 | BOLT 08020125 | 3 |
| | 8060001117 | WASHER Ø08 | 3 |
| | HPL1-5250-0000 | STEERING WHEEL | 1 |
| | WG-3402-FM-017 | DUST-PROOF | 1 |

| ASSB_NAME | PART NO. | NAME | QTY |
|---|---|---|---|
| STEERING SHAFT ASSY | | | |
| | | | |
| | | | |
| | | | |
| | | | |
| | | | |
| | | | |

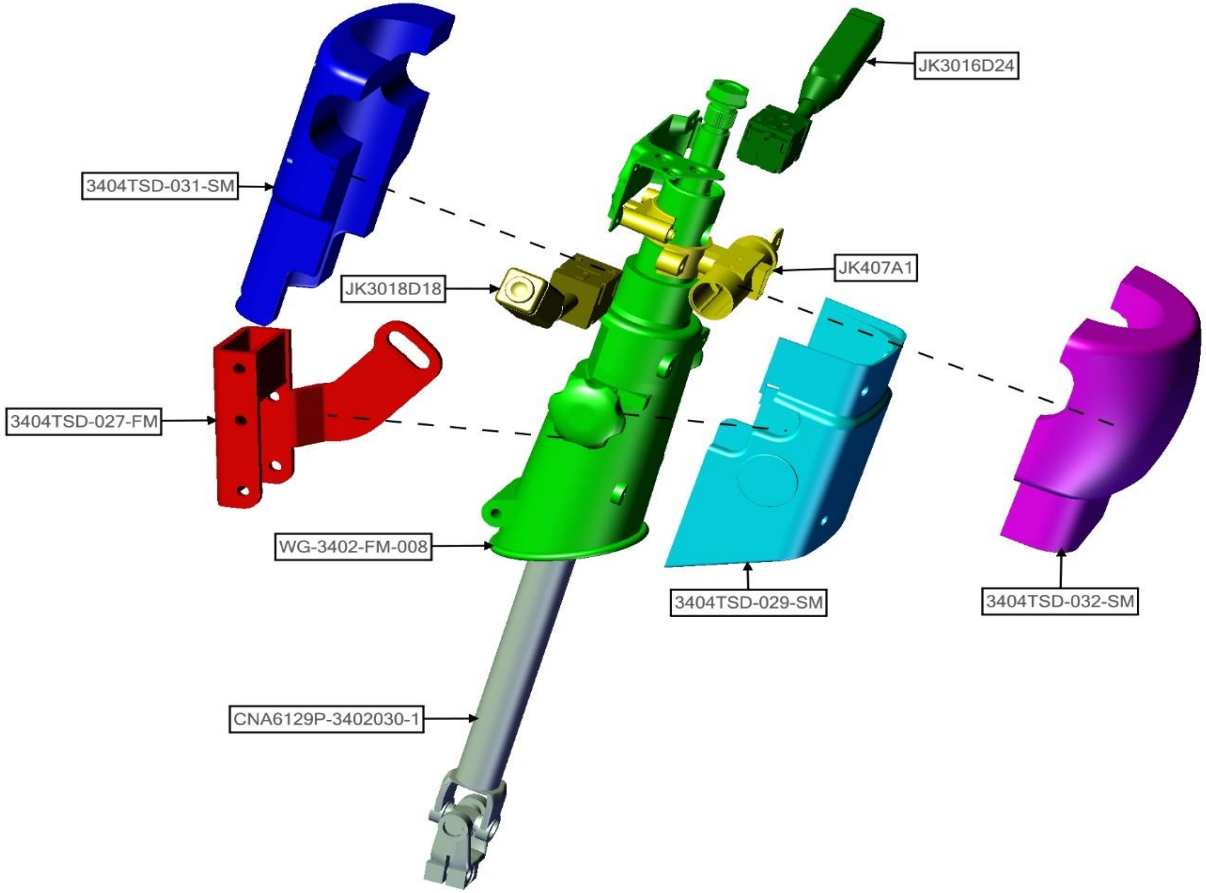


| ASSB_NAME | PART NO. | NAME | QTY |
|---|---|---|---|
| STEERING SHAFT | JK407A1 | STEERING SHAFT LOCK | 1 |
| | 3404TSD-031-SM | FRONT COVER | 1 |
| | 3404TSD-032-SM | UPPER REAR COVER | 1 |
| | 3404TSD-029-SM | LOWER REAR COVER | 1 |
| | WG-3402-FM-008 | MAIN SHAFT | 1 |
| | 3404TSD-027-FM | STEERING SHAFT BRACKET | 1 |
| | CNA6129P-3402030-1 | STEERING PROPELLER | 1 |

| ASSB_NAME | PART NO. | NAME | QTY |
|---|---|---|---|
| STEERING SHAFT | JK3018D18 | LH LEVER ASSY | 1 |
| | JK3016D24 | RH LEVER ASSY | 1 |
| | | | |
| | | | |
| | | | |
| | | | |
| | | | |

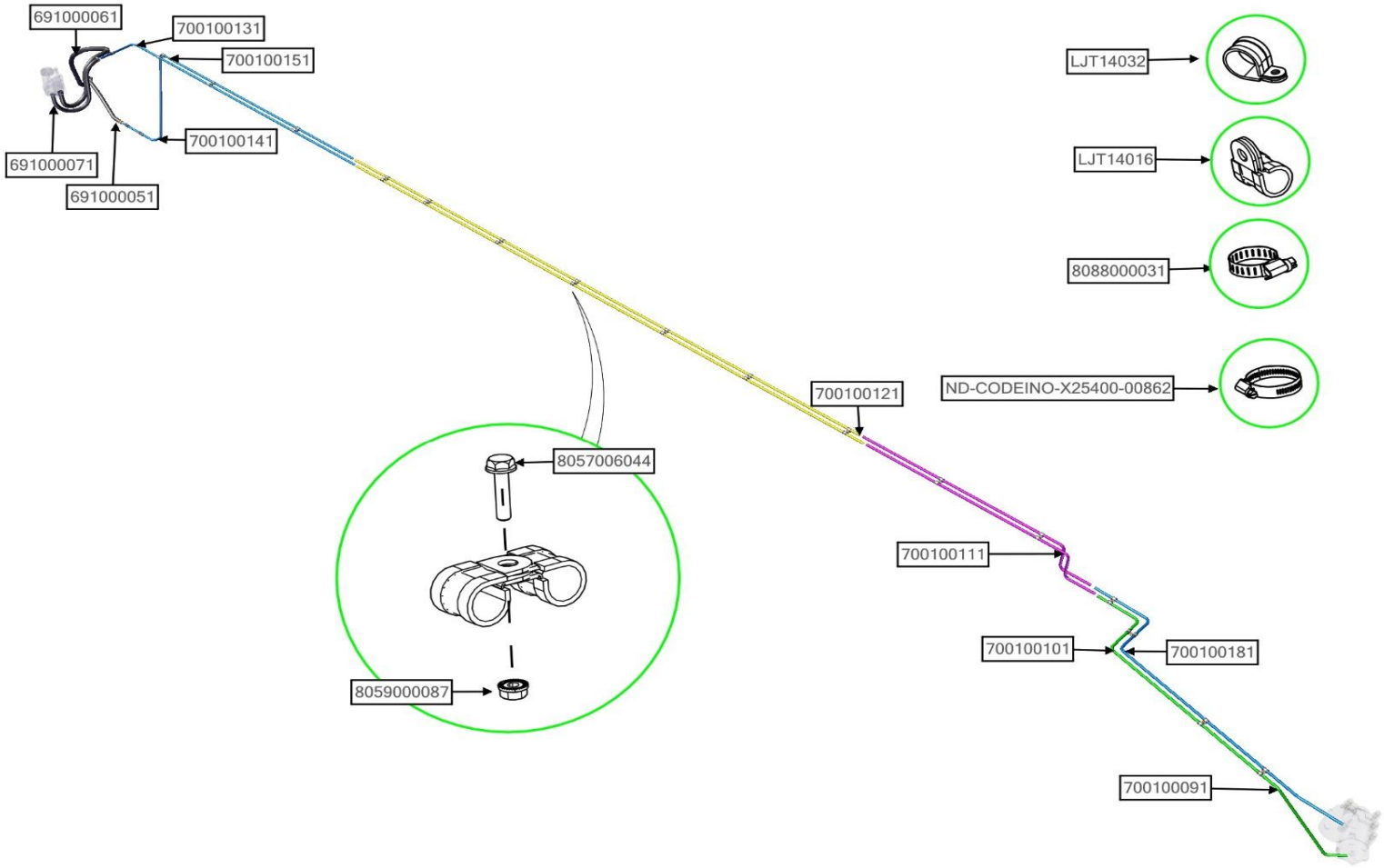


| ASSB_NAME | PART NO. | NAME | QTY |
|---|---|---|---|
| STEERING SUPPORT PIPE ASSY | 691000051 | RUBBER PIPE 01,STEERING SYSTEM | 1 |
| | 691000061 | RUBBER PIPE 02,STEERING SYSTEM | 1 |
| | 691000071 | RUBBER PIPE 03,STEERING SYSTEM | 1 |
| | 700100091 | STEERING OIL PIPE 01 | 1 |
| | 700100101 | STEERING OIL PIPE 02 | 1 |
| | 700100111 | STEERING OIL PIPE 03 | 2 |
| | 700100121 | STEERING OIL PIPE 04 | 2 |

| ASSB_NAME | PART NO. | NAME | QTY |
|---|---|---|---|
| STEERING SUPPORT PIPE ASSY | 700100131 | STEERING OIL PIPE 05 | 1 |
| | 700100141 | STEERING OIL PIPE 06 | 1 |
| | 700100151 | STEERING OIL PIPE 07 | 1 |
| | 700100181 | STEERING OIL PIPE 10 | 1 |
| | 8057006044 | BOLT 06020100 | 19 |
| | 8059000087 | NUT 06100 | 17 |
| | 8088000031 | CLAMP 16-27 | 2 |

| ASSB_NAME | PART NO. | NAME | QTY |
|---|---|---|---|
| STEERING SUPPORT PIPE ASSY | LJT14016 | CLIP Ø16 | |
| | LJT14032 | CLIP Ø32 | |
| | ND-CODEINO-X25400-00862 | CLAMP 25-40 | |

| ASSB_NAME | PART NO. | NAME | QTY |
|---|---|---|---|
| STEERING SUPPORT PIPE ASSY | | | |

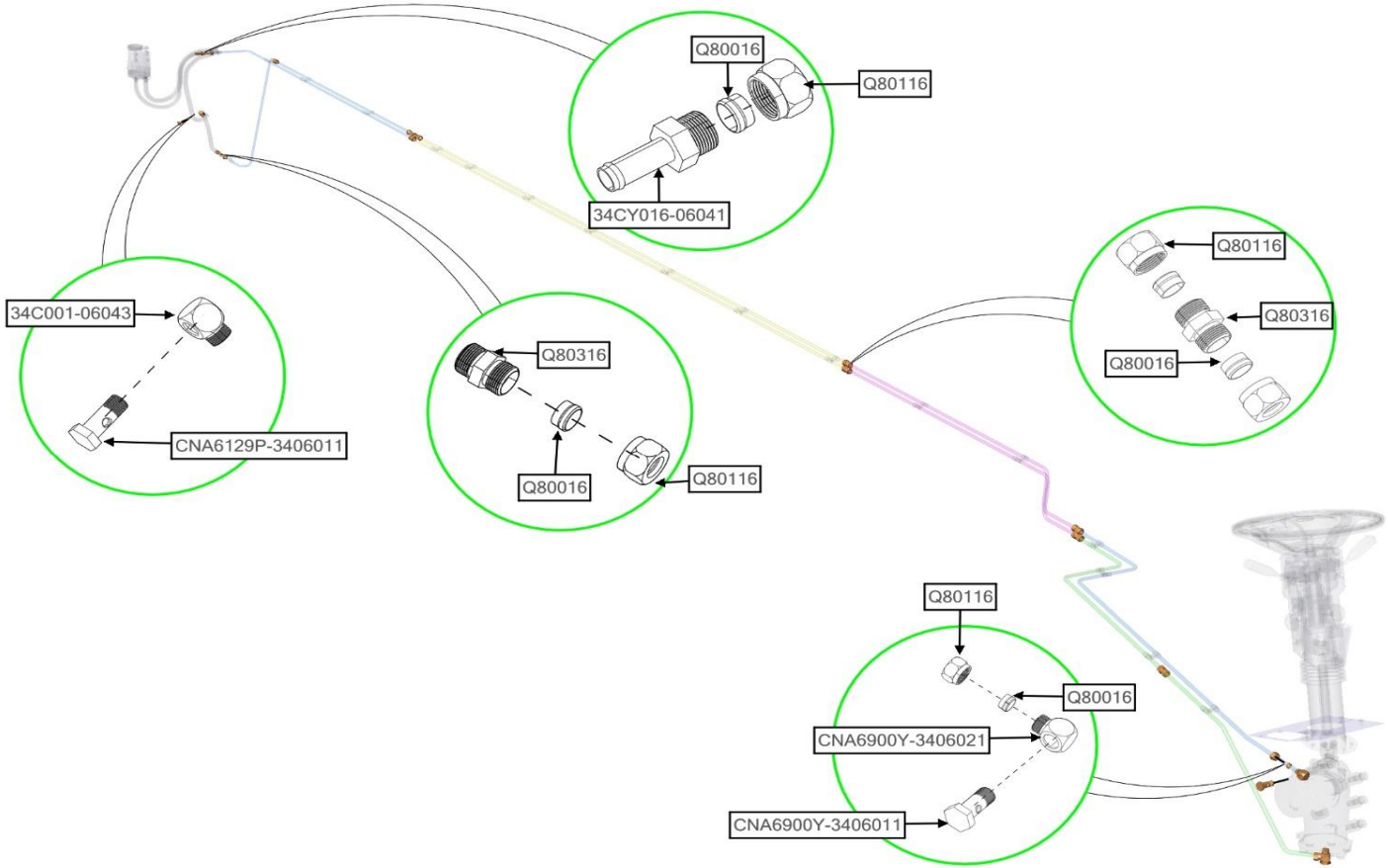


| ASSB_NAME | PART NO. | NAME | QTY |
|---|---|---|---|
| CONNECTOR SYSTEM | 34C001-06043 | OUTER CONNECTOR Ø18 | 1 |
| | 34CY016-06041 | CONNECTOR PIPE Ø16 | 1 |
| | CNA6129P-3406011 | HOLLOW BOLT M18 | 1 |
| | CNA6900Y-3406011 | HOLLOW BOLT M20 | 1 |
| | CNA6900Y-3406021 | OUTER CONNECTOR Ø20 | 1 |
| | Q80016 | OUTER CONNECTOR Ø16 | 4 |
| | Q80116 | NUT M22 | 4 |

| ASSB_NAME | PART NO. | NAME | QTY |
|---|---|---|---|
| CONNECTOR SYSTEM | Q80316 | CONNECTOR M22-M22 | 2 |
| | | | |
| | | | |
| | | | |
| | | | |
| | | | |
| | | | |

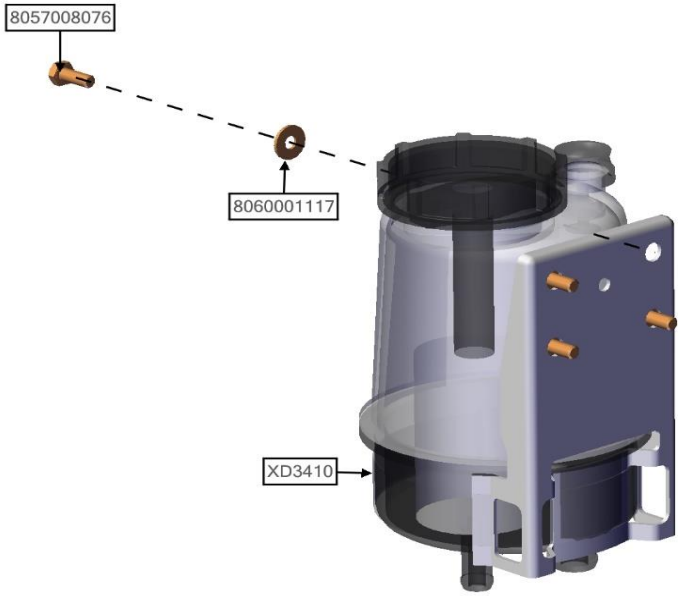


| ASSB_NAME | PART NO. | NAME | QTY |
|---|---|---|---|
| THE POWER STEERING | 8057008076 | BOLT 08020125 | 4 |
| | 8060001117 | WASHER Ø08 | 4 |
| | XD3410 | RESERVOIR OIL | 1 |
| | | | |
| | | | |
| | | | |
| | | | |

| ASSB_NAME | PART NO. | NAME | QTY |
|---|---|---|---|
| THE POWER STEERING | | | |
| | | | |
| | | | |
| | | | |
| | | | |
| | | | |
| | | | |

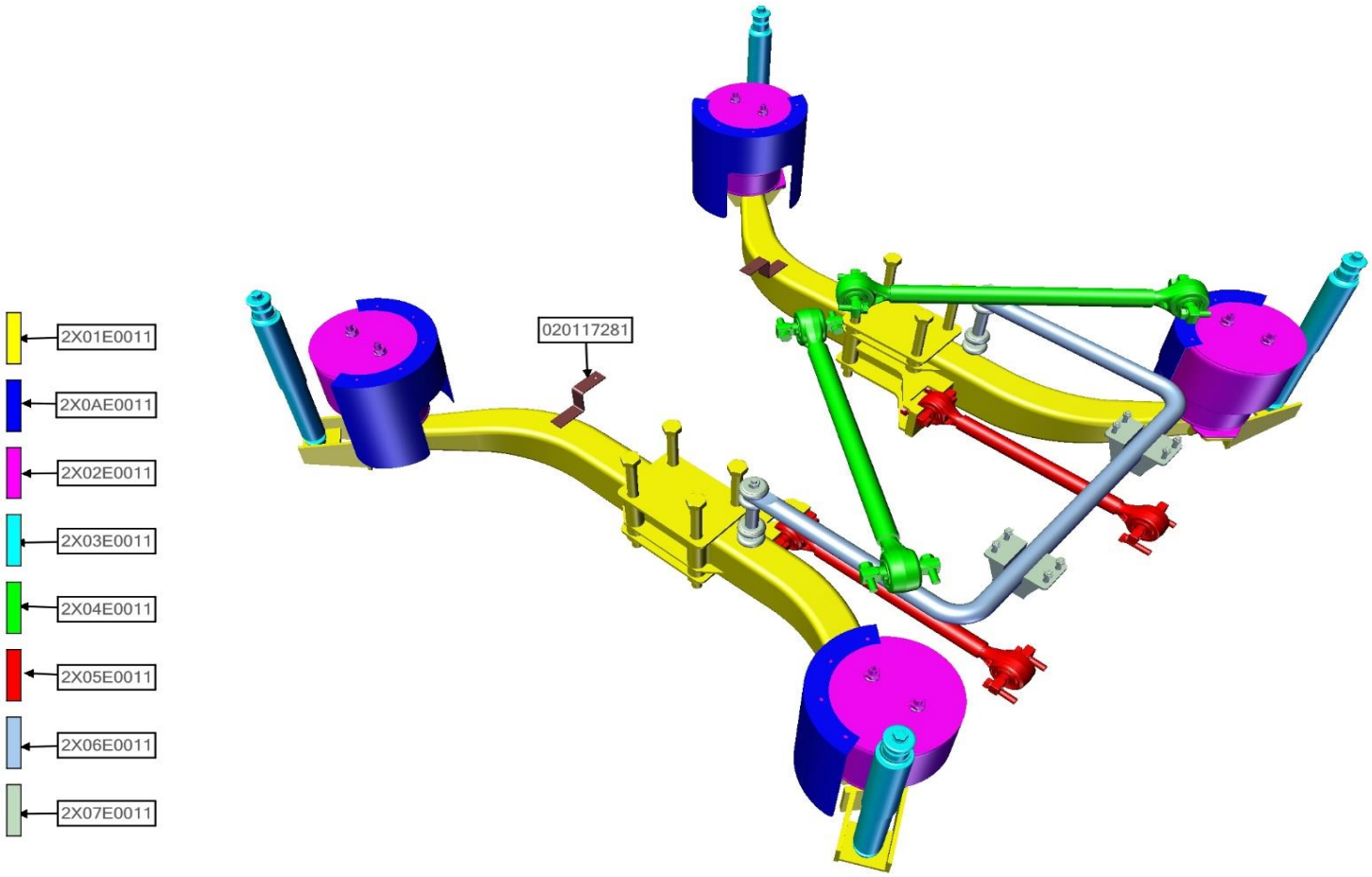


| ASSB_NAME | PART NO. | NAME | QTY |
|---|---|---|---|
| REAR SUSPENSION SYSTEM | 2X01E0011 | REAR AXLE MOUNTING ASSY | 1 |
| | 2X02E0011 | REAR AIRBAG ASSY | 1 |
| | 2X03E0011 | REAR SHOCK OBSORBER ASSY | 1 |
| | 2X04E0011 | VERTICAL BALANCE BAR ASSY 01 | 1 |
| | 2X05E0011 | VERTICAL BALANCE BAR ASSY 02 | 1 |
| | 2X06E0011 | VERTICAL BALANCE BAR MOUNTING ASSY | 1 |
| | 2X07E0011 | VERTICAL BALANCE BAR MOUNTING ASSY | 1 |

| ASSB_NAME | PART NO. | NAME | QTY |
|---|---|---|---|
| REAR SUSPENSION SYSTEM | 2X0AE0011 | FENDER ASSY | 1 |
| | 020117281 | VALVE BRACKET | 2 |
| | | | |
| | | | |
| | | | |
| | | | |
| | | | |

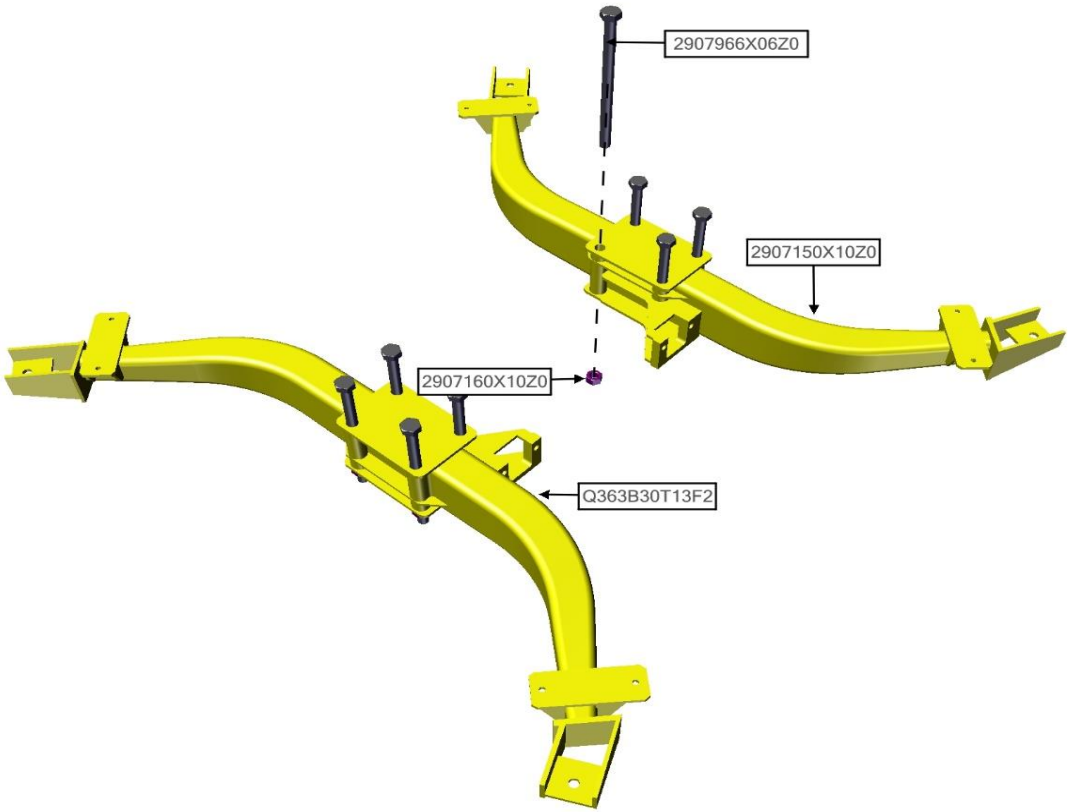


| ASSB_NAME | PART NO. | NAME | QTY |
|---|---|---|---|
| REAR AXLE MOUNTING ASSY | 2907966X06Z0 | BOLT 30400200 | 8 |
| | 2907150X10Z0 | LH REAR AXLE MOUNTING | 1 |
| | 2907160X10Z0 | RH REAR AXLE MOUNTING | 1 |
| | Q363B30T13F2 | NUT 30200 | 8 |
| | | | |
| | | | |
| | | | |

| ASSB_NAME | PART NO. | NAME | QTY |
|---|---|---|---|
| REAR AXLE MOUNTING ASSY | | | |
| | | | |
| | | | |
| | | | |
| | | | |
| | | | |
| | | | |

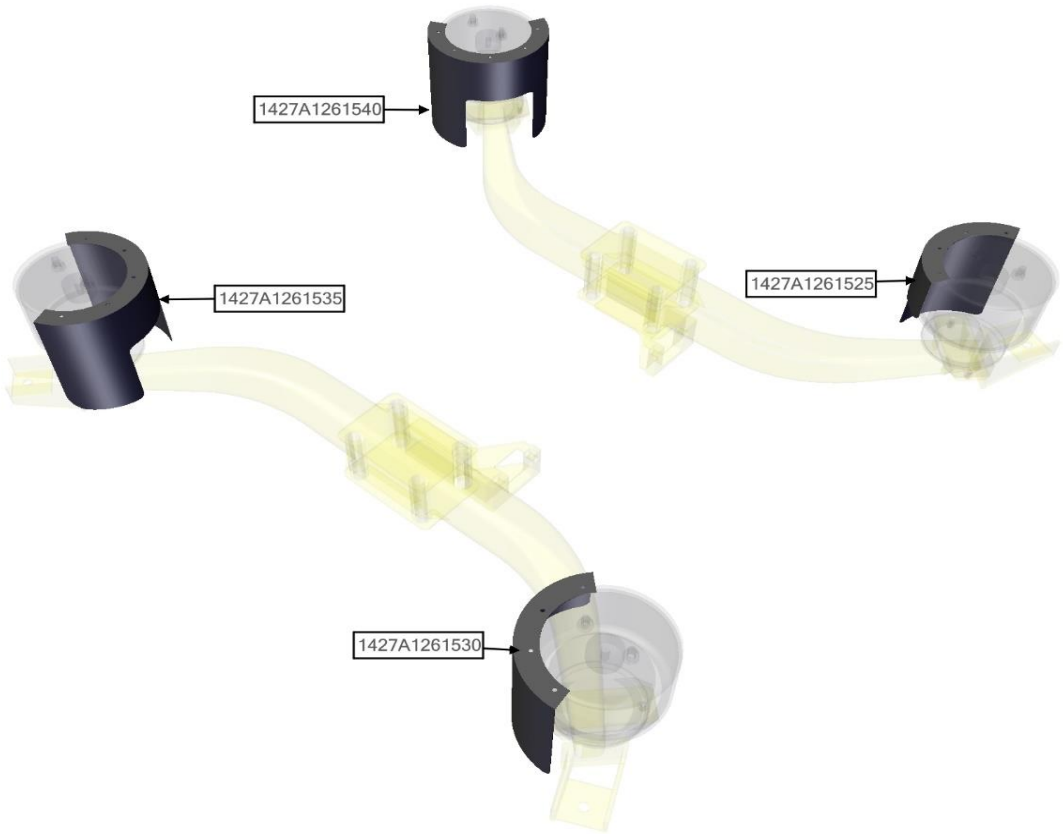


| ASSB_NAME | PART NO. | NAME | QTY |
|---|---|---|---|
| FENDER ASSY | 1427A1261525 | SPLIT WASHER Ø20 | 4 |
| | 1427A1261530 | VERTICAL BALANCE BAR MOUNTING | 1 |
| | 1427A1261535 | BOLT 20070150 | 4 |
| | 1427A1261540 | | |
| | | | |
| | | | |
| | | | |

| ASSB_NAME | PART NO. | NAME | QTY |
|---|---|---|---|
| FENDER ASSY | | | |
| | | | |
| | | | |
| | | | |
| | | | |
| | | | |
| | | | |

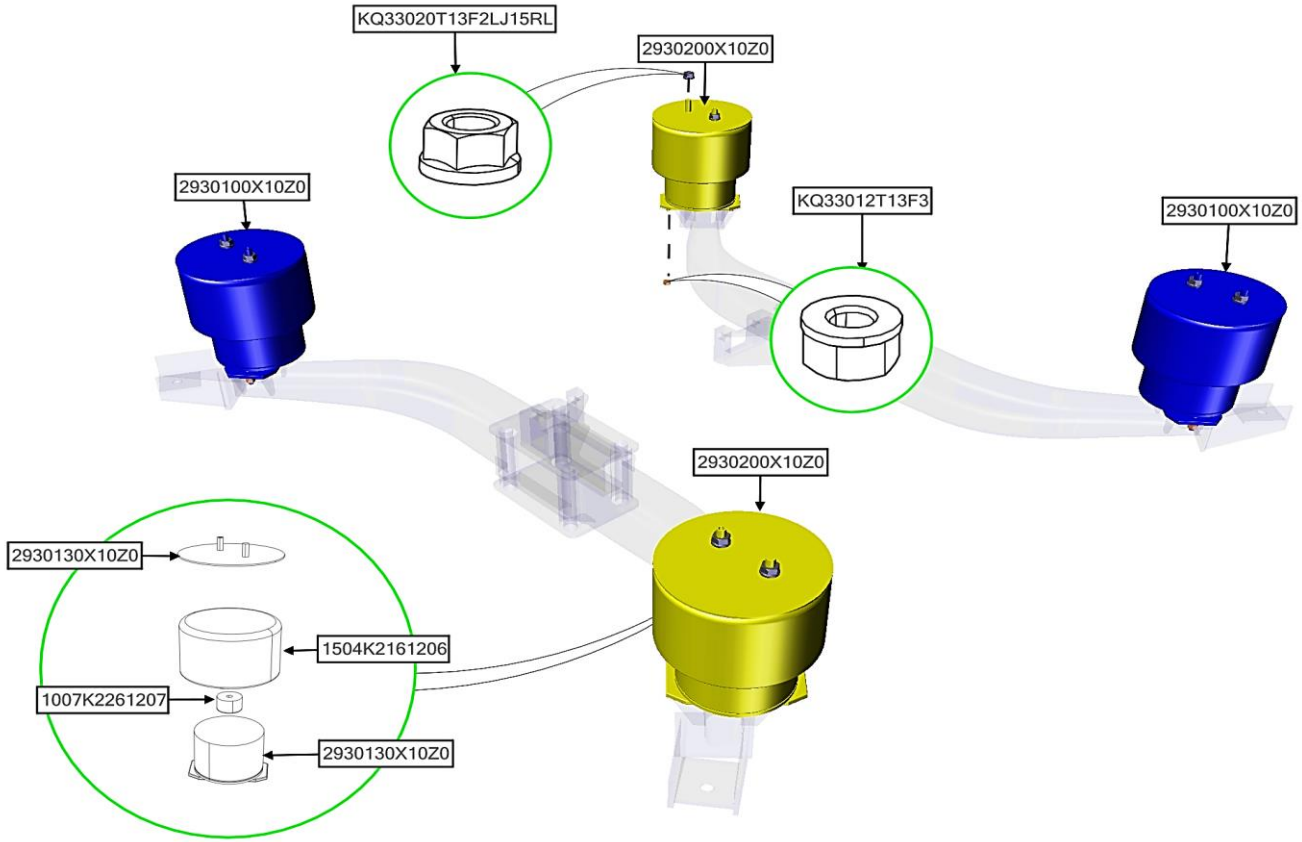


| ASSB_NAME | PART NO. | NAME | QTY |
|---|---|---|---|
| REAR AIRBAG ASSY | 1007K2261207 | STOPPER PAD | 1 |
| | 1504K2161206 | AIR BAG | 1 |
| | 2930100X10Z0 | AIR SPRING,REAR 02 | 2 |
| | 2930130X10Z0 | UP-PAD | 1 |
| | 2930130X10Z0 | DOWN-PAD | 1 |
| | 2930200X10Z0 | AIR SPRING,REAR 01 | 2 |
| | KQ33012T13F3 | NUT 12150 | 8 |

| ASSB_NAME | PART NO. | NAME | QTY |
|---|---|---|---|
| REAR AIRBAG ASSY | KQ33020T13F2LJ15RL | NUT 18150 | 8 |
| | | | |
| | | | |
| | | | |
| | | | |
| | | | |
| | | | |

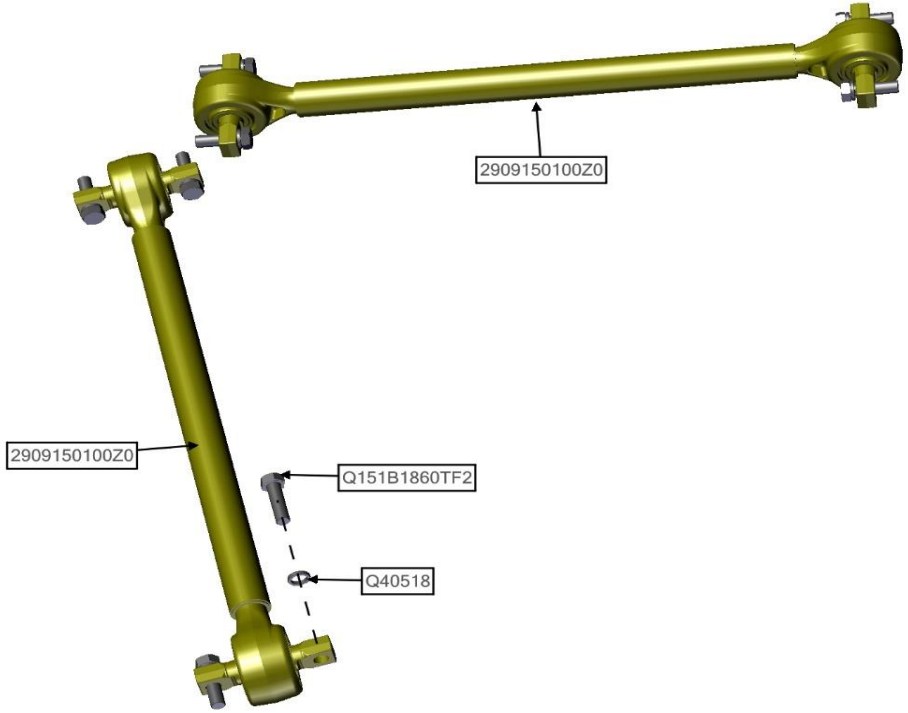


| ASSB_NAME | PART NO. | NAME | QTY |
|---|---|---|---|
| VERTICAL BALANCE BAR ASSY 01 | 2909150100Z0 | LONGITUDINAL BRACING 01 | 2 |
| | Q151B1860TF2 | BOLT 18060150 | 8 |
| | Q40518 | WASHER | 8 |
| | | | |
| | | | |
| | | | |
| | | | |

| ASSB_NAME | PART NO. | NAME | QTY |
|---|---|---|---|
| VERTICAL BALANCE BAR ASSY 01 | | | |
| | | | |
| | | | |
| | | | |
| | | | |
| | | | |
| | | | |

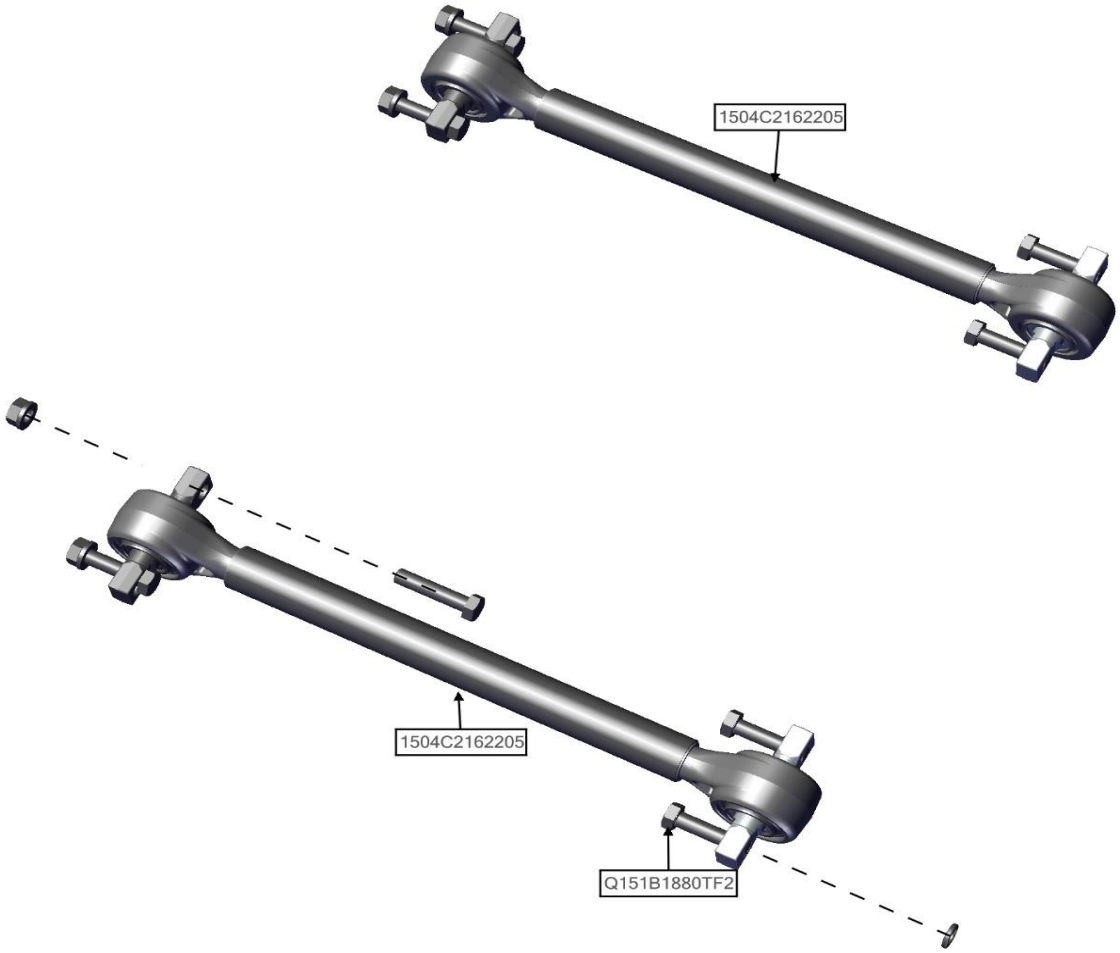


| ASSB_NAME | PART NO. | NAME | QTY |
|---|---|---|---|
| VERTICAL BALANCE BAR ASSY 02 | 1504C2162205 | LONGITUDINAL BRACING 02 | 2 |
| | KQ33020T13F2LJ15RL | NUT 18150 | 4 |
| | Q151B18 | BOLT 18060150 | 8 |
| | Q40518 | WASHER | 4 |
| | | | |
| | | | |
| | | | |

| ASSB_NAME | PART NO. | NAME | QTY |
|---|---|---|---|
| VERTICAL BALANCE BAR ASSY 02 | | | |
| | | | |
| | | | |
| | | | |
| | | | |
| | | | |
| | | | |

| ASSB_NAME | PART NO. | NAME | QTY |
|---|---|---|---|
| REAR SHOCK OBSORBER ASSY | 1801K2264330 | REAR STABILIZER | 1 |
| | | | |
| | | | |
| | | | |
| | | | |
| | | | |
| | | | |

| ASSB_NAME | PART NO. | NAME | QTY |
|---|---|---|---|
| REAR SHOCK OBSORBER ASSY | | | |
| | | | |
| | | | |
| | | | |
| | | | |
| | | | |
| | | | |

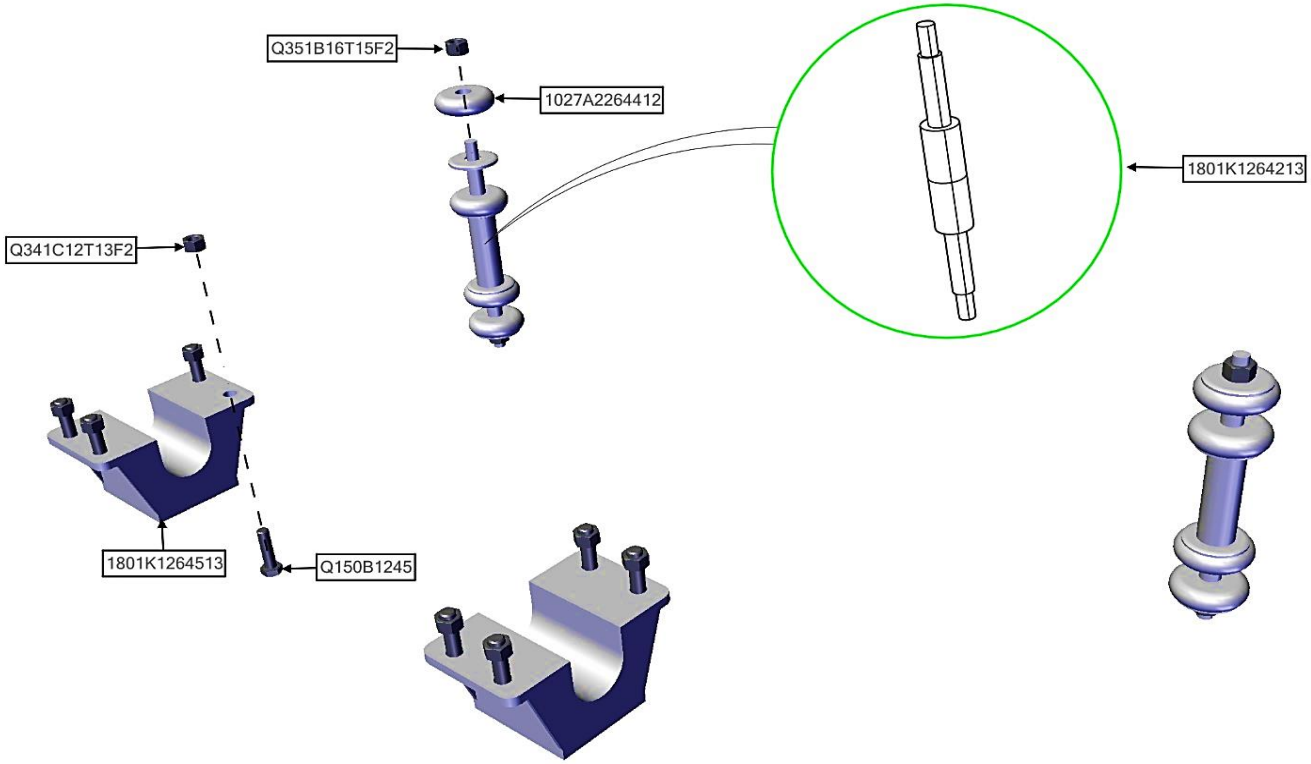


| ASSB_NAME | PART NO. | NAME | QTY |
|---|---|---|---|
| HANGER ASSY,REAR | 1027A2264412 | CUSHION | 8 |
| | 1801K1264213 | STABILIZER | 1 |
| | 1801K1264513 | HANGER STABILIZER | 1 |
| | Q150B1245 | BOLT 12045150 | 8 |
| | Q341C12T13F2 | NUT 12150 | 8 |
| | Q351B16T15F2 | NUT 16150 | 4 |
| | | | |

| ASSB_NAME | PART NO. | NAME | QTY |
|---|---|---|---|
| HANGER ASSY,REAR | | | |
| | | | |
| | | | |
| | | | |
| | | | |
| | | | |
| | | | |

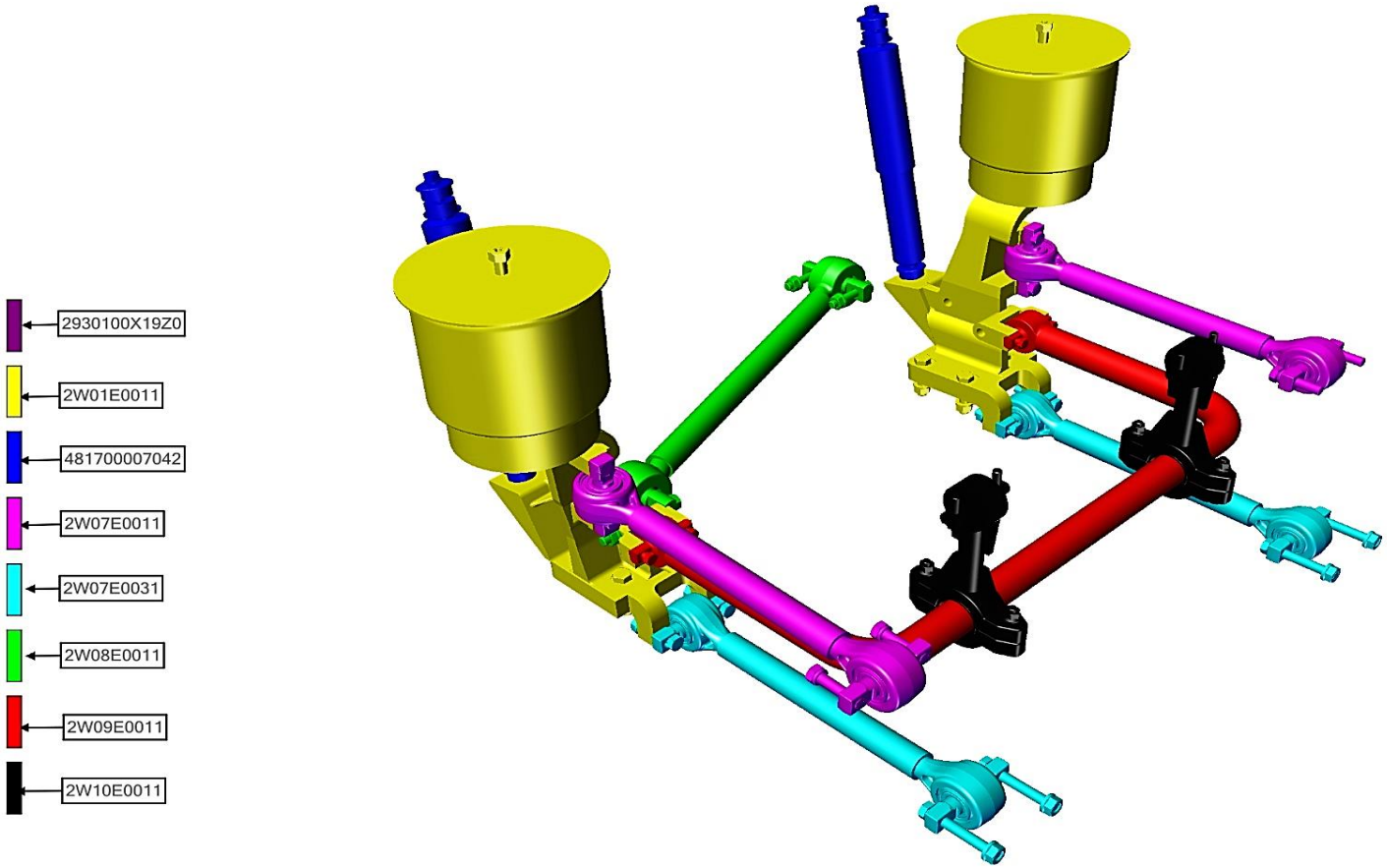


| ASSB_NAME | PART NO. | NAME | QTY |
|---|---|---|---|
| FRONT SUSPENSION SYSTEM | 2W01E0011 | BRACKET ASSY,FRN AIR SPRING | 1 |
| | 2W07E0011 | LONGITUDINAL BRACING 01 | 1 |
| | 2W07E0031 | LONGITUDINAL BRACING 02 | 1 |
| | 2W08E0011 | LATERAL BRACING | 1 |
| | 2W09E0011 | FRONT STABILIZER | 1 |
| | 2W10E0011 | HANGER ASSY,FRT | 1 |
| | 2930100X19Z0 | FRONT, AIRBAG ASSY | 2 |

| ASSB_NAME | PART NO. | NAME | QTY |
|---|---|---|---|
| FRONT SUSPENSION SYSTEM | 481700007042 | SHOCK ABSORBER, FRONT | 2 |
| | | | |
| | | | |
| | | | |
| | | | |
| | | | |
| | | | |

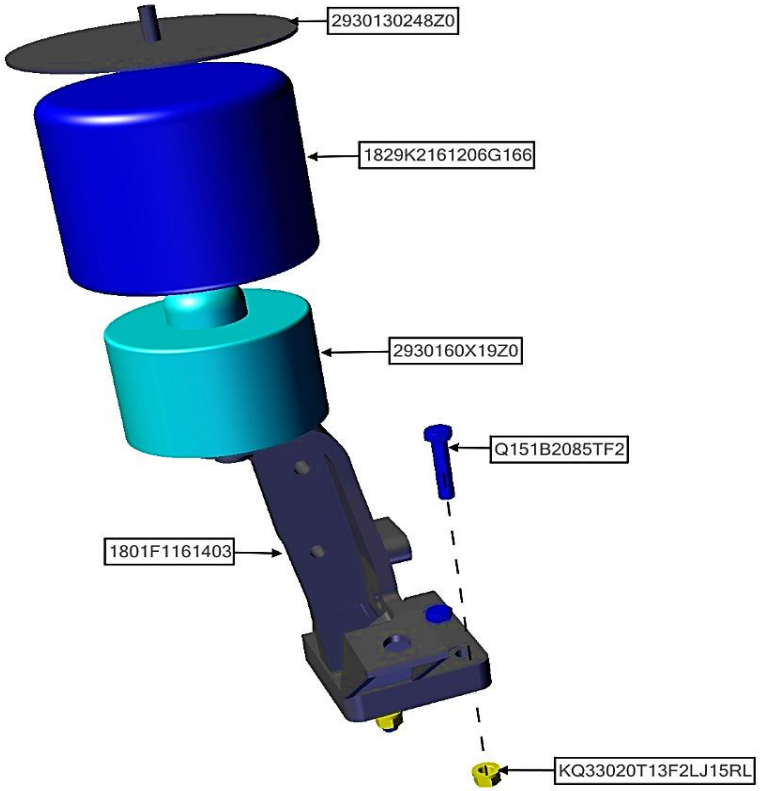


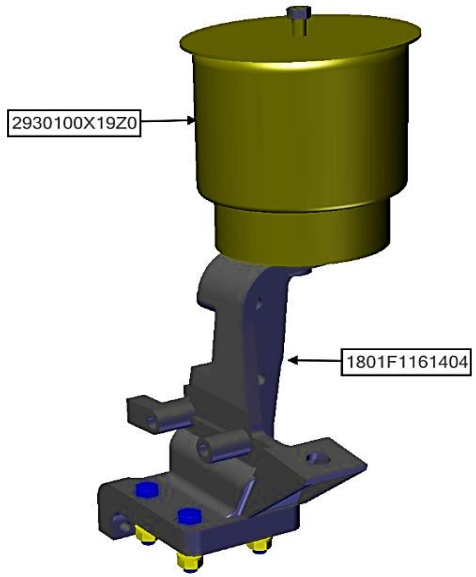


| ASSB_NAME | PART NO. | NAME | QTY |
|---|---|---|---|
| BRACKET ASSY,FRN AIR SPRING | 1801F1161403 | BRACKET ASSY,FRN AIR SPRING LH | 1 |
| | 1801F1161404 | BRACKET ASSY,FRN AIR SPRING RH | 1 |
| | 1829K2161206G166 | AIR BAG | 1 |
| | 2930100X19Z0 | AIR BAG FRN | 2 |
| | 2930160X19Z0 | BRACKET ASSY BELOW AIR BAG | 1 |
| | 2930130248Z0 | BRACKET ASSY UPPER AIR BAG | 1 |
| | KQ33020T13F2LJ15RL | NUT 20150 | 8 |

| ASSB_NAME | PART NO. | NAME | QTY |
|---|---|---|---|
| BRACKET ASSY,FRN AIR SPRING | Q151B2085TF2 | BOLT 20085150 | 8 |
| | | | |
| | | | |
| | | | |
| | | | |
| | | | |
| | | | |

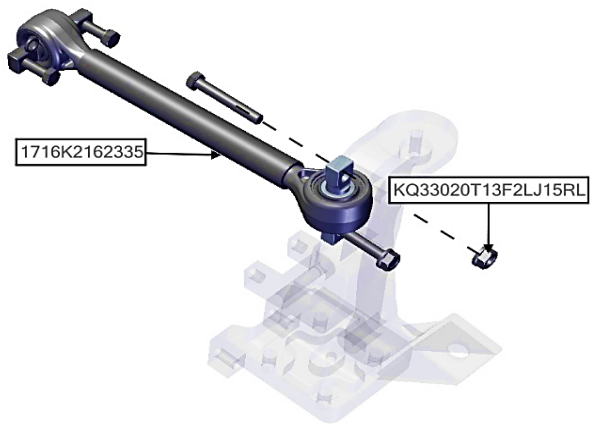


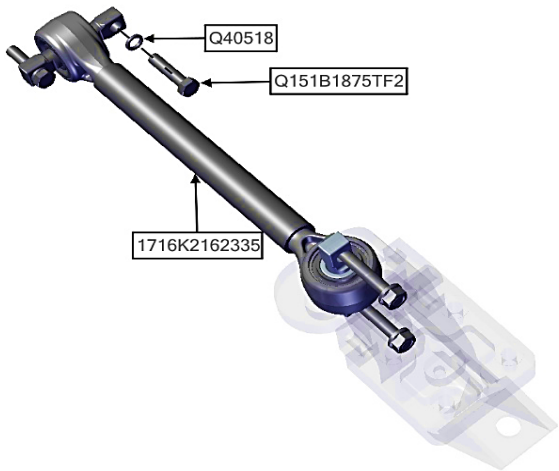


| ASSB_NAME | PART NO. | NAME | QTY |
|---|---|---|---|
| L/BRACING 01 ASSY | 1716K2162335 | L/BRACING 01 ASSY, FRONT | 2 |
| | KQ33020T13F2LJ15RL | NUT 18150 | 4 |
| | Q151B18120TF2 | BOLT 18120150 | 4 |
| | Q151B1875TF2 | BOLT 18075150 | 4 |
| | Q40518 | WASHER Ø18 | 4 |
| | | | |
| | | | |

| ASSB_NAME | PART NO. | NAME | QTY |
|---|---|---|---|
| LONGITUDINAL BRACING 01 | | | |
| | | | |
| | | | |
| | | | |
| | | | |
| | | | |
| | | | |

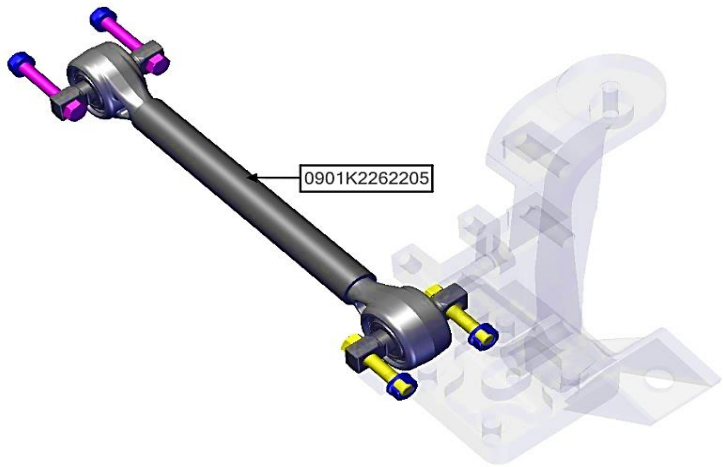


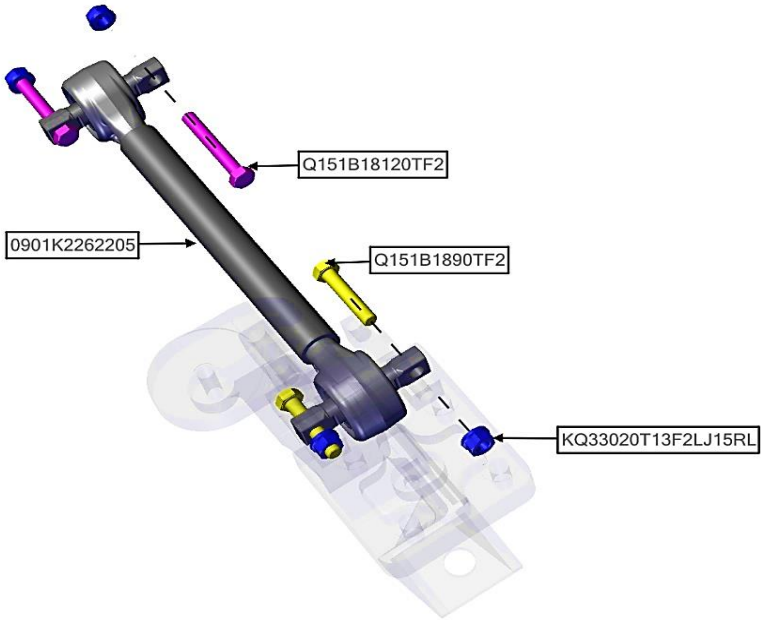


| ASSB_NAME | PART NO. | NAME | QTY |
|---|---|---|---|
| L/BRACING 02 ASSY | 0901K2262205 | L/BRACING 02 ASSY, FRONT | 2 |
| | KQ33020T13F2LJ15RL | NUT 18150 | 8 |
| | Q151B18120TF2 | BOLT 18120150 | 4 |
| | Q151B1890TF2 | BOLT 18090150 | 4 |
| | | | |
| | | | |
| | | | |

| ASSB_NAME | PART NO. | NAME | QTY |
|---|---|---|---|
| L/BRACING 02 ASSY | | | |
| | | | |
| | | | |
| | | | |
| | | | |
| | | | |
| | | | |

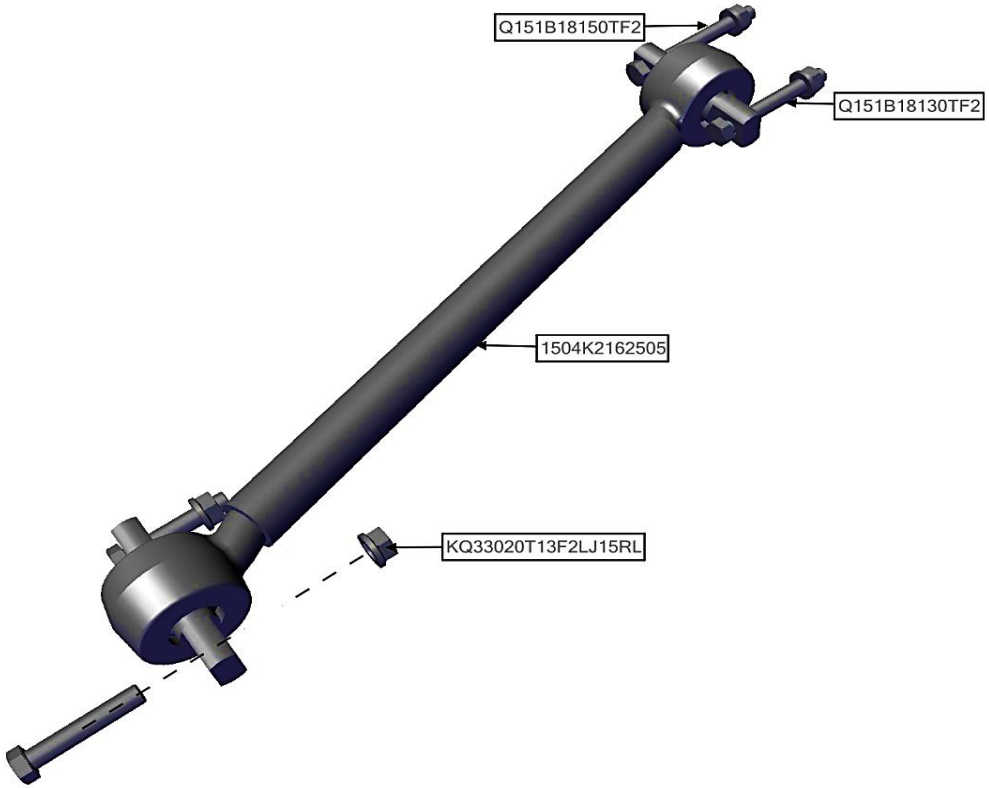


| ASSB_NAME | PART NO. | NAME | QTY |
|---|---|---|---|
| LATERAL BRACING ASSEMBLY | 1504K2162505 | LATERAL BRACING | 1 |
| | KQ33020T13F2LJ15RL | NUT 18150 | 4 |
| | Q151B18130TF2 | BOLT 18130150 | 1 |
| | Q151B18150TF2 | BOLT 18150150 | 1 |
| | Q151B1895TF2 | BOLT 18095150 | 2 |
| | | | |
| | | | |

| ASSB_NAME | PART NO. | NAME | QTY |
|---|---|---|---|
| LATERAL BRACING ASSEMBLY | | | |
| | | | |
| | | | |
| | | | |
| | | | |
| | | | |
| | | | |

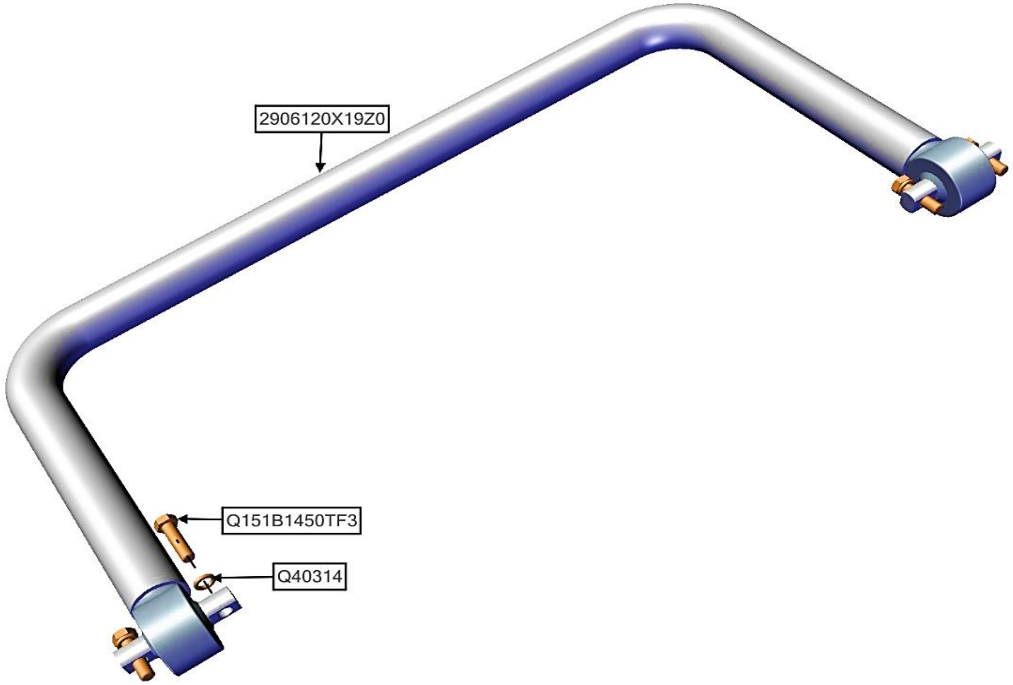


| ASSB_NAME | PART NO. | NAME | QTY |
|---|---|---|---|
| STL ASSY,FRONT | 2906120X19Z0 | FRONT STABILIZER | 1 |
| | Q151B1450TF3 | BOLT 14050150 | 4 |
| | Q40314 | WASHER Ø14 | 4 |
| | | | |
| | | | |
| | | | |
| | | | |

| ASSB_NAME | PART NO. | NAME | QTY |
|---|---|---|---|
| STL ASSY,FRONT | | | |
| | | | |
| | | | |
| | | | |
| | | | |
| | | | |
| | | | |

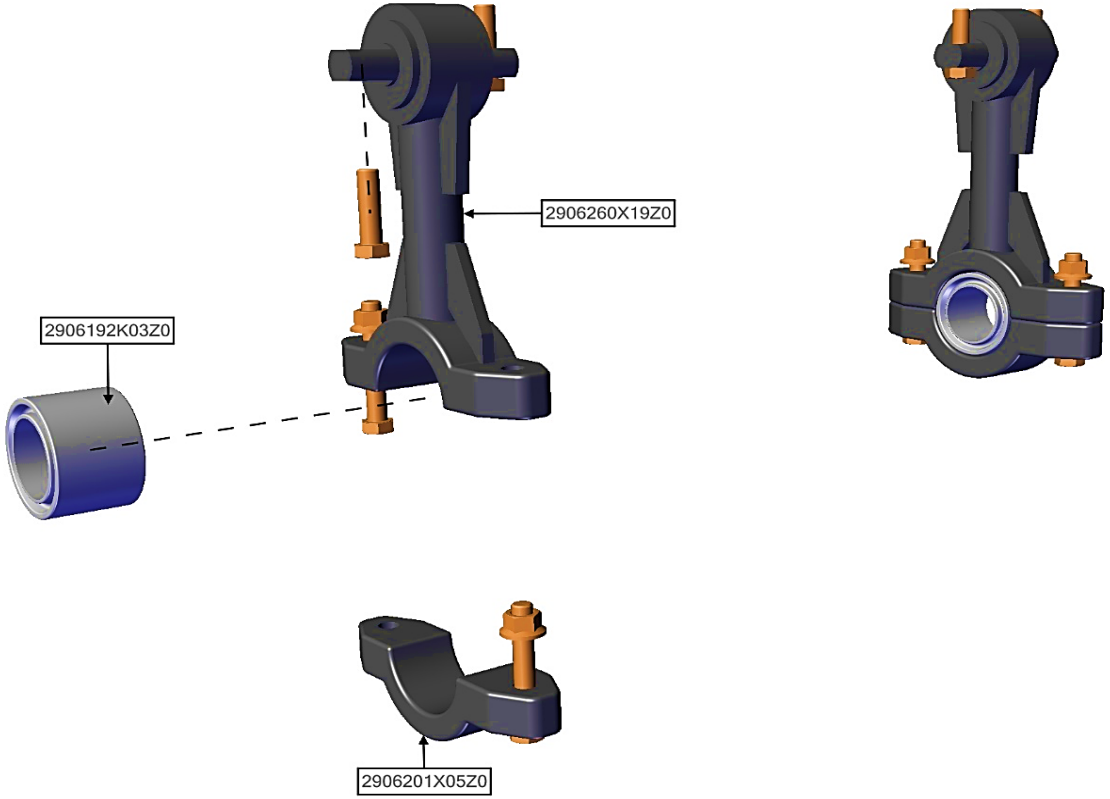


| ASSB_NAME | PART NO. | NAME | QTY |
|---|---|---|---|
| HANGER ASSY,FRT | 2906192K03Z0 | CUSHION | 1 |
| | 2906201X05Z0 | BRACKET HANGER ASSY | 1 |
| | 2906260X19Z0 | FRONT STABILIZER | 1 |
| | KQ33014T13F3LJ15 | NUT 14150 | 4 |
| | Q151B1450TF3 | BOLT 14050150 | 4 |
| | Q151B1490TF3 | BOLT 14090150 | 4 |
| | | | |

| ASSB_NAME | PART NO. | NAME | QTY |
|---|---|---|---|
| HANGER ASSY,FRT | | | |
| | | | |
| | | | |
| | | | |
| | | | |
| | | | |
| | | | |

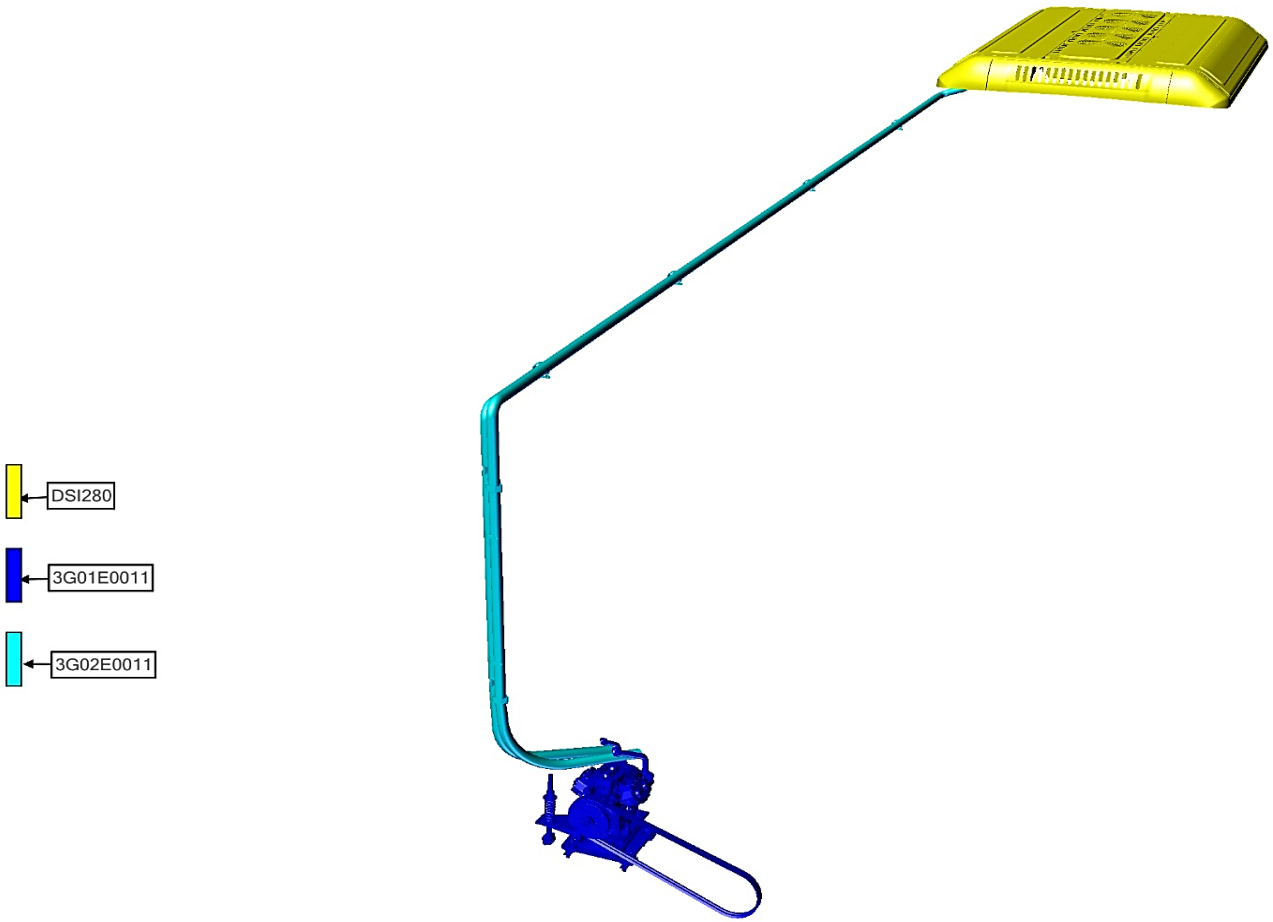


| ASSB_NAME | PART NO. | NAME | QTY |
|---|---|---|---|
| AIR CONDITIONING SYSTEM | 3G01E0011 | GAS COMPRESION ASSY | 1 |
| | 3G02E0011 | GAS PIPE SYSTEM | 1 |
| | DSI280 | DUAL AIR CONDITIONER | 1 |
| | | | |
| | | | |
| | | | |
| | | | |

| ASSB_NAME | PART NO. | NAME | QTY |
|---|---|---|---|
| AIR CONDITIONING SYSTEM | | | |
| | | | |
| | | | |
| | | | |
| | | | |
| | | | |
| | | | |

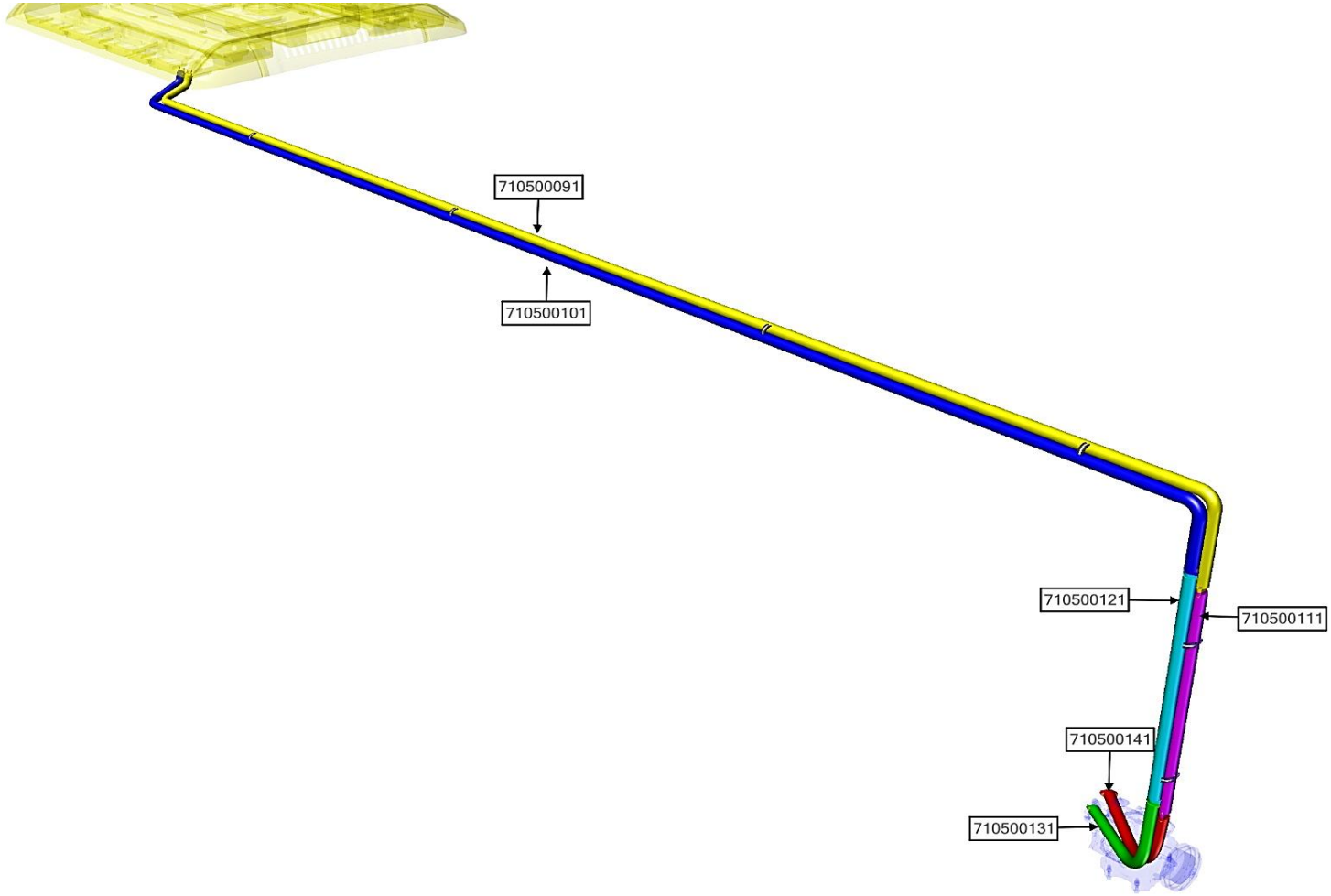


| ASSB_NAME | PART NO. | NAME | QTY |
|---|---|---|---|
| GAS PIPE SYSTEM | 710500091 | GAS PIPE 01 | 1 |
| | 710500101 | GAS PIPE 02 | 1 |
| | 710500111 | GAS PIPE 03 | 1 |
| | 710500121 | GAS PIPE 04 | 1 |
| | 710500131 | RUBBER PIPE,AIR CONDITIONING SYSTEM | 1 |
| | 710500141 | RUBBER PIPE,AIR CONDITIONING SYSTEM | 1 |
| | | | |

| ASSB_NAME | PART NO. | NAME | QTY |
|---|---|---|---|
| GAS PIPE SYSTEM | | | |
| | | | |
| | | | |
| | | | |
| | | | |
| | | | |
| | | | |

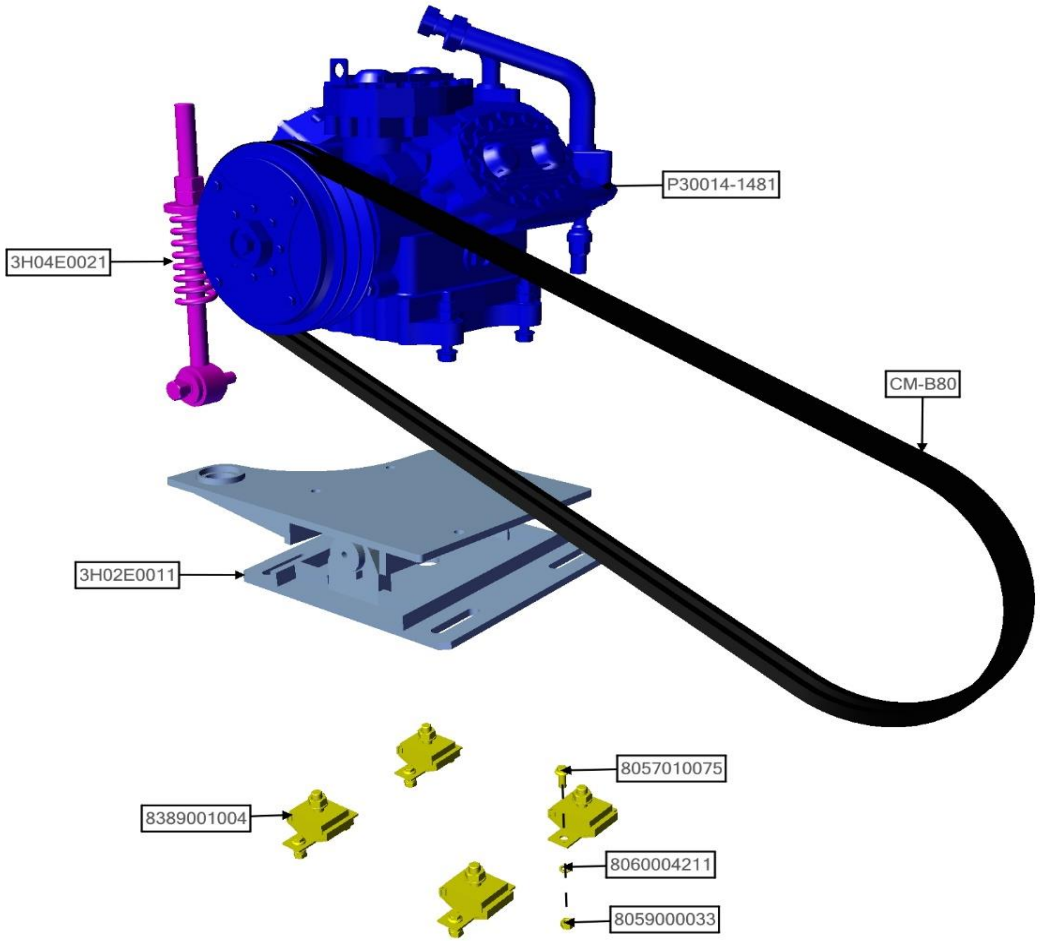


| ASSB_NAME | PART NO. | NAME | QTY |
|---|---|---|---|
| GAS COMPRESION ASSY | 3H02E0011 | BRACKET,RFG COMPRESSOR | 1 |
| | 3H04E0021 | BELT TURNBUCKLE | 1 |
| | CM-B80 | BELT | 1 |
| | 8389001004 | CUSHION | 4 |
| | P30014-1481 | RFG COMPRESSOR | 1 |
| | 8057010075 | BOLT 10025125 | 4 |
| | 8059000033 | NUT 10125 | 4 |

| ASSB_NAME | PART NO. | NAME | QTY |
|---|---|---|---|
| GAS COMPRESION ASSY | 8060004211 | WASHER Ø10 | 4 |
| | | | |
| | | | |
| | | | |
| | | | |
| | | | |
| | | | |

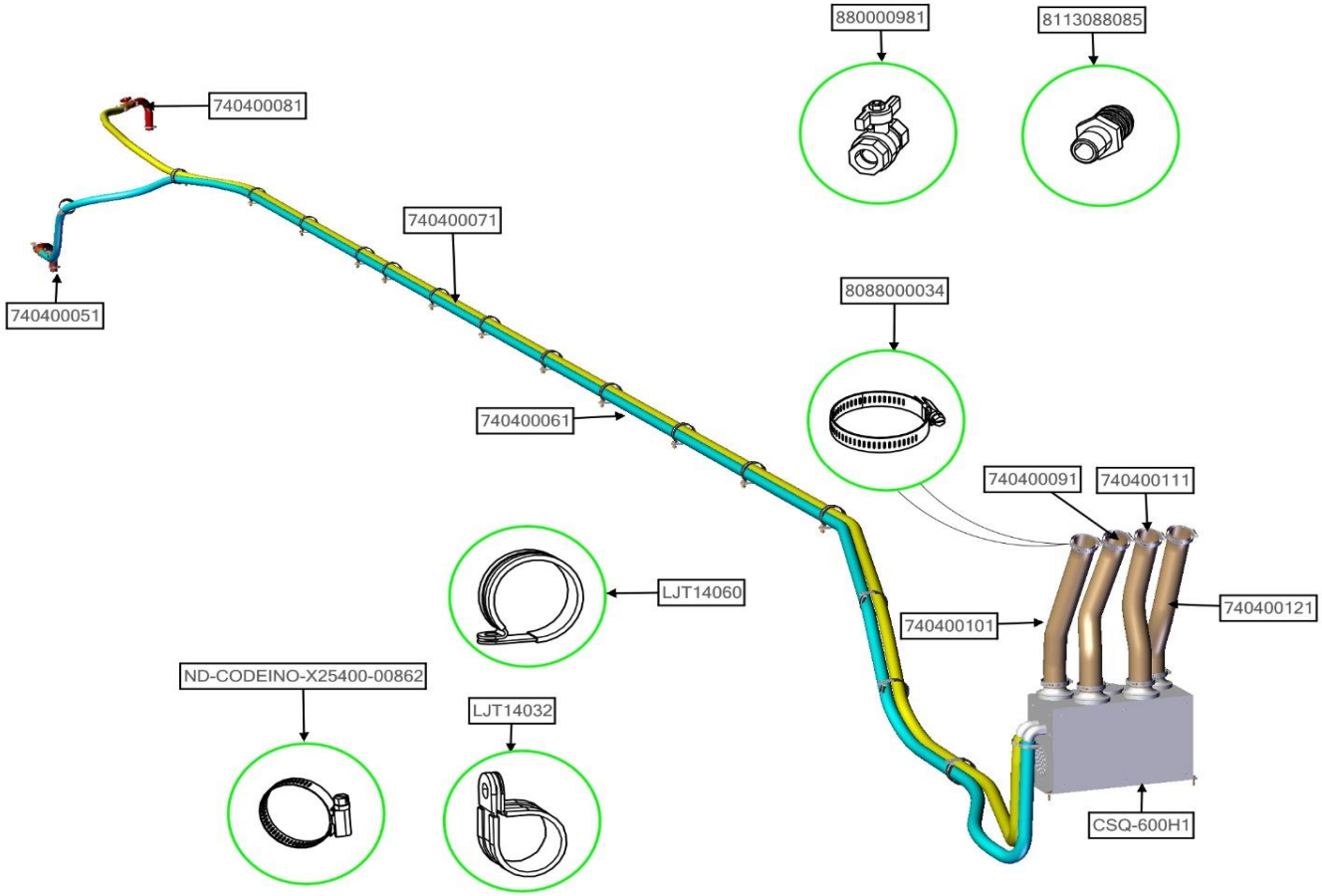


| ASSB_NAME | PART NO. | NAME | QTY |
|---|---|---|---|
| GLASS HEATING SYSTEM | 740400051 | HEATING WATER PIPE 01 | 1 |
| | 740400061 | HEATING WATER PIPE 02 | 1 |
| | 740400071 | HEATING WATER PIPE 03 | 1 |
| | 740400081 | ÓNG SU SƯỞI | 1 |
| | 740400091 | HEATING PIPE 01 | 1 |
| | 740400101 | HEATING PIPE 02 | 1 |
| | 740400111 | HEATING PIPE 03 | 1 |

| ASSB_NAME | PART NO. | NAME | QTY |
|---|---|---|---|
| GLASS HEATING SYSTEM | 740400121 | HEATING PIPE 04 | 1 |
| | 880000981 | LOCK VALVE | 2 |
| | 8088000034 | CLAMP 40-60 | 8 |
| | 8113088085 | CONNECTOR PIPE SOFT Ø25 | 4 |
| | LJT14032 | CLAMP Ø32 | 4 |
| | LJT14060 | CLAMP Ø60 | 15 |
| | LJT14060 | CLAMP Ø60 | 1 |

| ASSB_NAME | PART NO. | NAME | QTY |
|---|---|---|---|
| GLASS HEATING SYSTEM | ND-CODEINO-X25400-00862 | CLAMP 25-40 | 8 |
| | CSQ-600H1 | HEATER UNIT | 1 |

| ASSB_NAME | PART NO. | NAME | QTY |
|---|---|---|---|
| GLASS HEATING SYSTEM | | | |

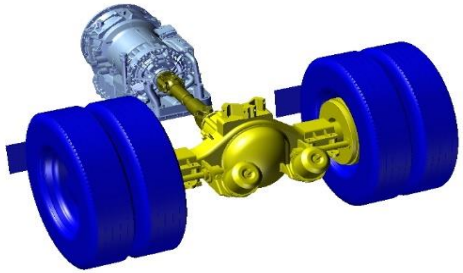

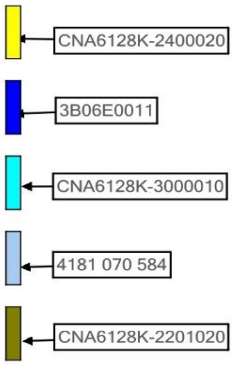


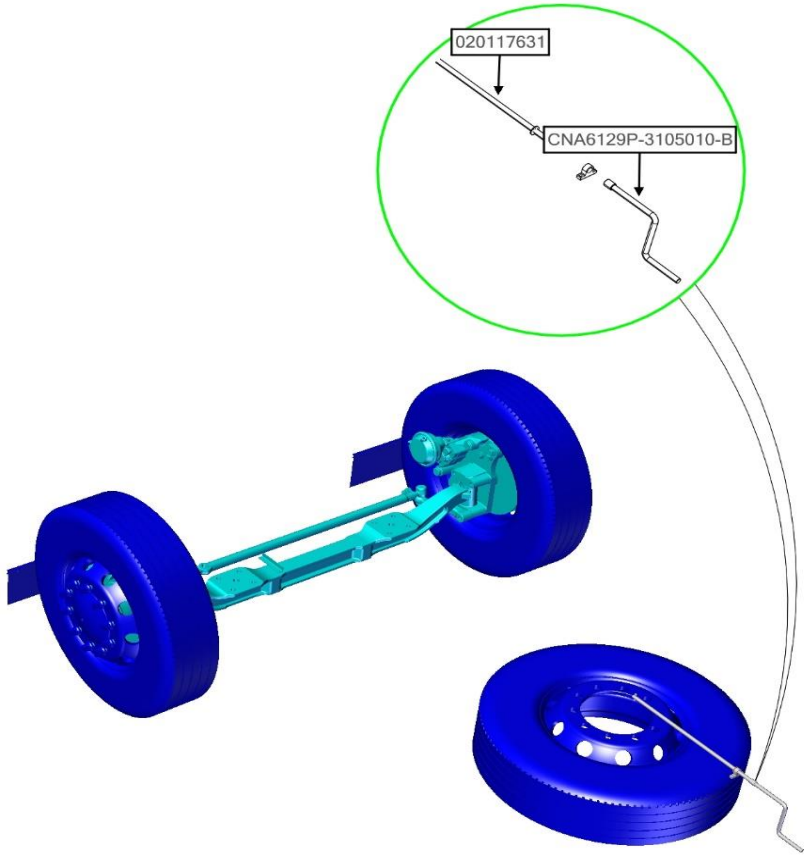


| ASSB_NAME | PART NO. | NAME | QTY |
|---|---|---|---|
| POWER TRAIN | 3B06E0011 | WHEEL ASSY | 1 |
| | 4181 070 584 | GEAR BOX ASSY | 1 |
| | CNA6129P-3105010-B | CONNECTING COMPONENTS | 1 |
| | 020117631 | ARM | 1 |
| | CNA6128K-2201020 | PROPELLER ASSY | 1 |
| | CNA6128K-2400020 | REAR AXLE | 1 |
| | CNA6128K-3000010 | FRONT AXLE | 1 |

| ASSB_NAME | PART NO. | NAME | QTY |
|---|---|---|---|
| POWER TRAIN | | | |
| | | | |
| | | | |
| | | | |
| | | | |
| | | | |
| | | | |

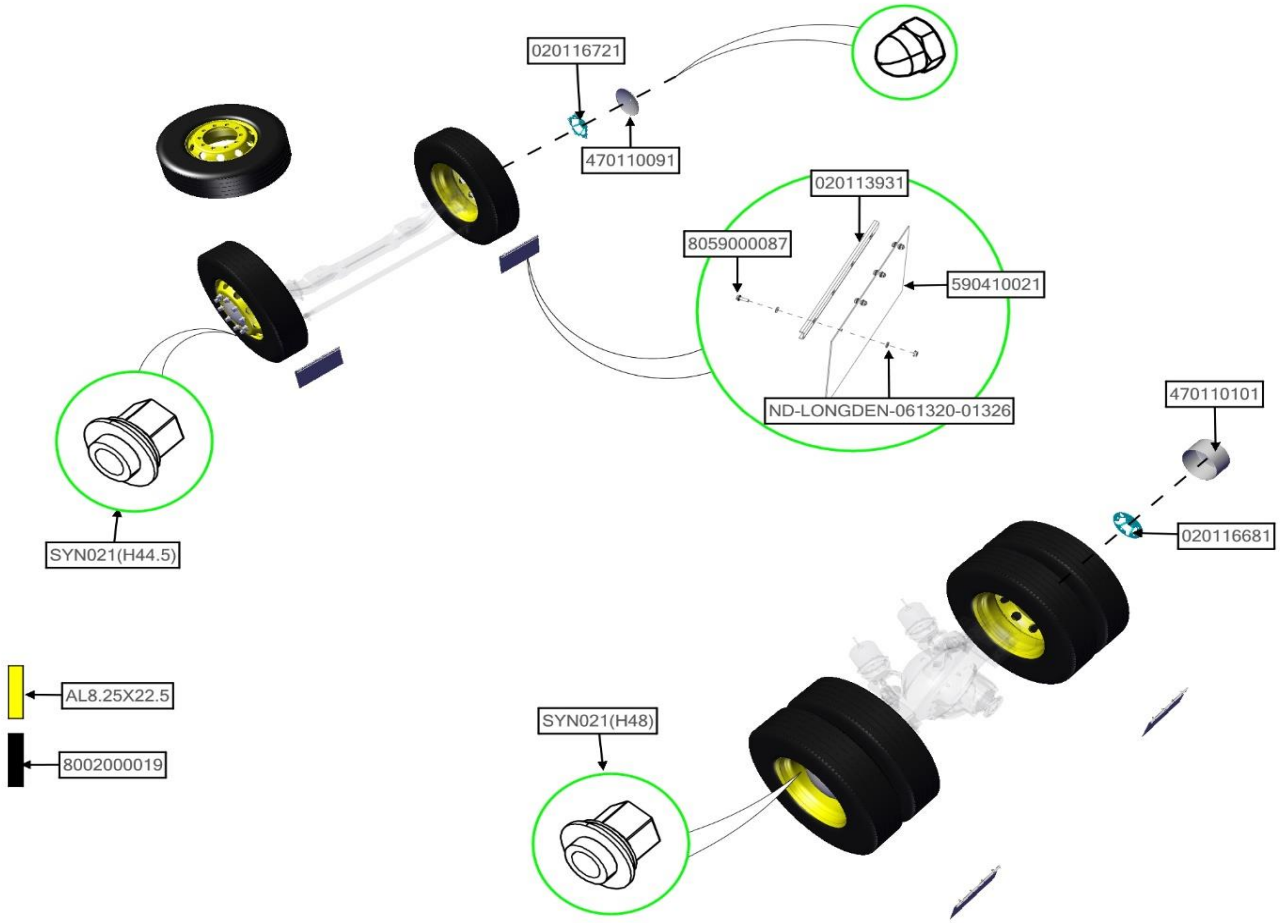


| ASSB_NAME | PART NO. | NAME | QTY |
|---|---|---|---|
| WHEEL ASSY | 020113931 | FENDER BATTEN | 1 |
| | 020116681 | BRACKET | 1 |
| | 020116721 | BRACKET | 1 |
| | 470110091 | RIM COVER, FRONT | 1 |
| | 470110101 | RIM COVER, REAR | 1 |
| | 590410021 | FENDER | 1 |
| | 8059000087 | NUT 06100 | 1 |

| ASSB_NAME | PART NO. | NAME | QTY |
|---|---|---|---|
| WHEEL ASSR | AL8.25X22.5 | RIM | 7 |
| | ND-LONGDEN-061320-01326 | WASHER Ø06 | 8 |
| | 8002000019 | TIRE | 7 |
| | SYN021(H44.5) | WEEL NUT, FRONT | 20 |
| | SYN021(H48) | WEEL NUT, REAR | 20 |
| | | | |
| | | | |

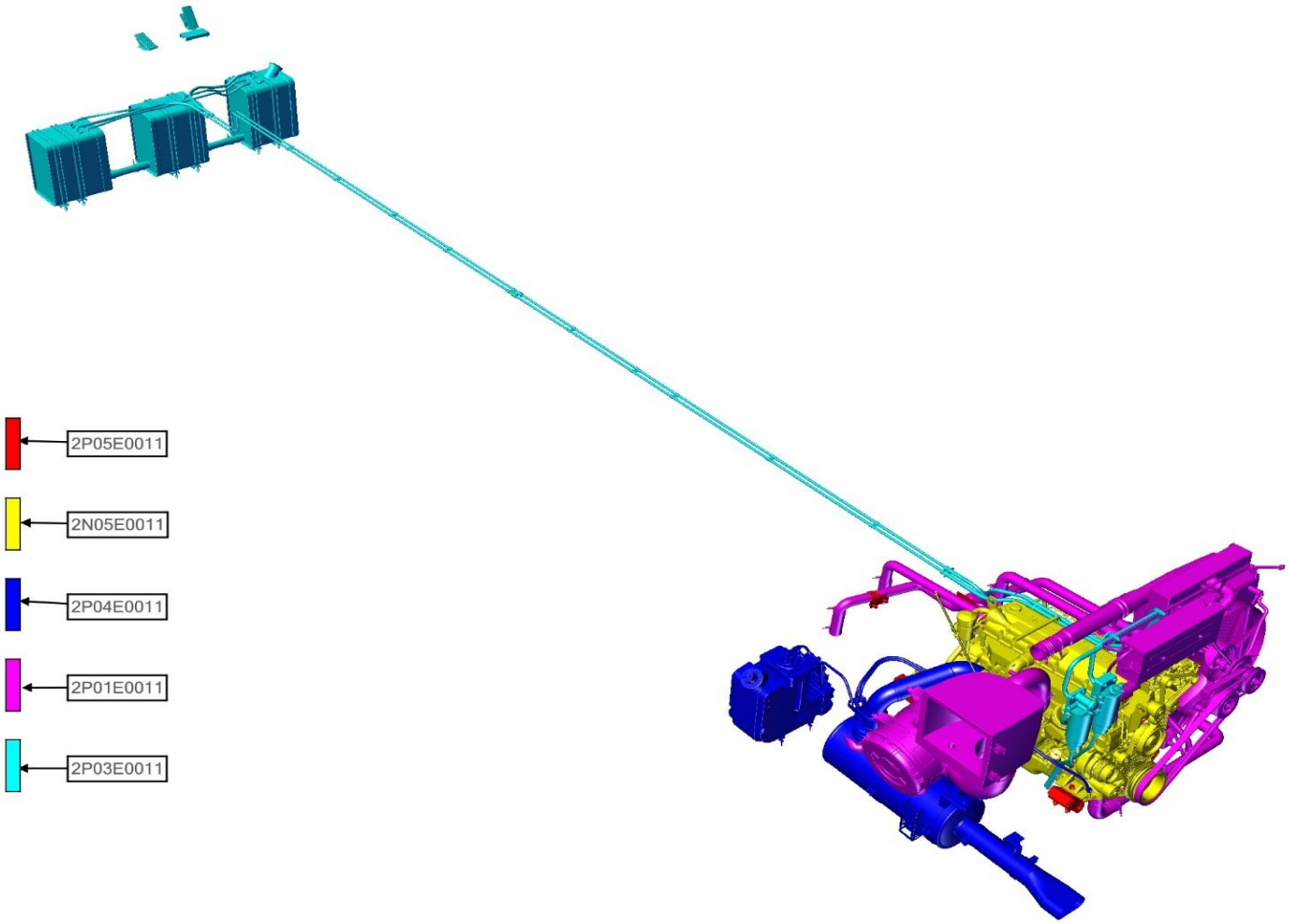


| ASSB_NAME | PART NO. | NAME | QTY |
|---|---|---|---|
| DIESEL ENGINE ASSY | 2N05E0011 | ENGINE | 1 |
| | 2P01E0011 | COOLING SYSTEM | 1 |
| | 2P03E0011 | FUEL SYSTEM | 1 |
| | 2P04E0011 | EXHAUST AIR SYSTEM | 1 |
| | 2P05E0011 | MINOR ITEMS | 1 |
| | | | |
| | | | |

| ASSB_NAME | PART NO. | NAME | QTY |
|---|---|---|---|
| DIESEL ENGINE ASSY | | | |
| | | | |
| | | | |
| | | | |
| | | | |
| | | | |
| | | | |

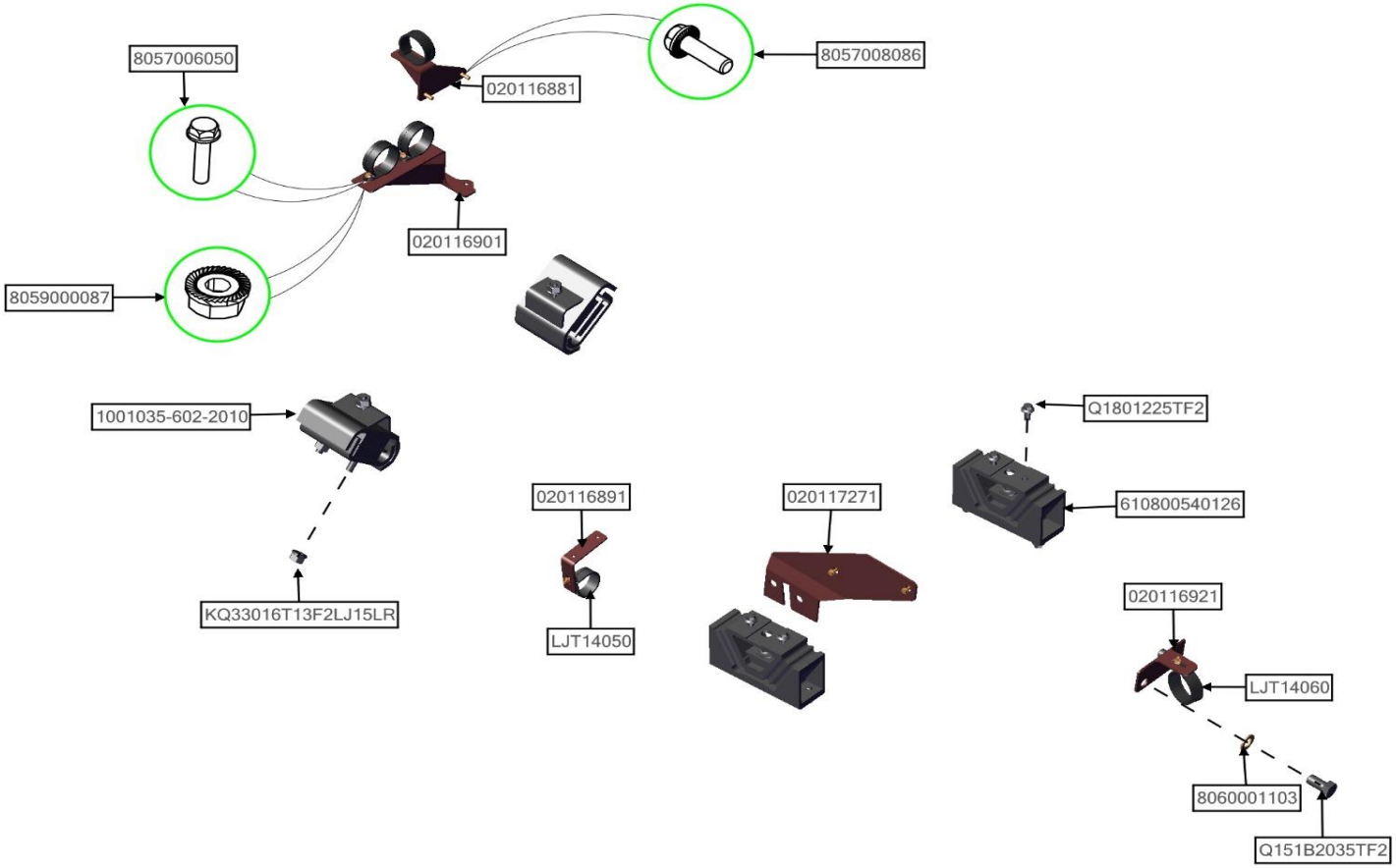


| ASSB_NAME | PART NO. | NAME | QTY |
|---|---|---|---|
| MINOR ITEMS | 1001035-602-2010 | ENGINE MOUTING,FRONT | 2 |
| | 020116881 | BRACKET 01 | 1 |
| | 020116891 | BRACKET 02 | 1 |
| | 020116901 | BRACKET 03 | 1 |
| | 020116921 | BRACKET 04 | 1 |
| | 020117271 | BRACKET 05 | 1 |
| | 610800540126 | ENGINE MOUTING,REAR | 2 |

| ASSB_NAME | PART NO. | NAME | QTY |
|---|---|---|---|
| MINOR ITEMS | 8057006050 | BOLT 06025100 | |
| | 8057008086 | BOLT 08025125 | |
| | 8059000087 | NUT 06100 | |
| | 8060001103 | WASHER Ø20 | |
| | KQ33016T13F2LJ15LR | NUT 16150 | |
| | LJT14050 | CLAMP Ø50 | |
| | LJT14060 | CLAMP Ø60 | |

| ASSB_NAME | PART NO. | NAME | QTY |
|---|---|---|---|
| MINOR ITEMS | Q151B2035TF2 | BOLT 20035150 | |
| | Q1801225TF2 | BOLT 12025150 | |

| ASSB_NAME | PART NO. | NAME | QTY |
|---|---|---|---|
| MINOR ITEMS | | | |

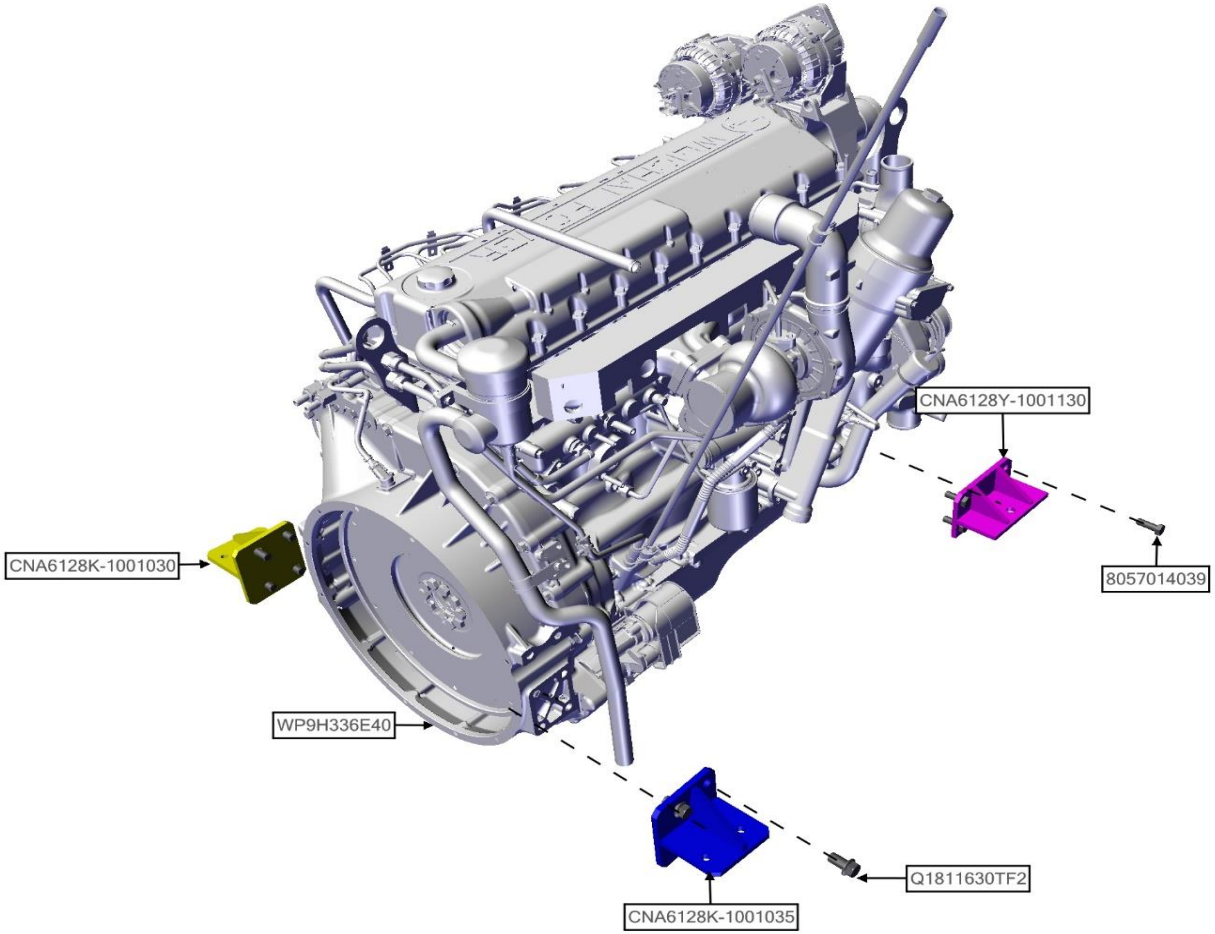


| ASSB_NAME | PART NO. | NAME | QTY |
|---|---|---|---|
| ENGINE | 8057014039 | BOLT 14040150 | 8 |
| | CNA6128K-1001030 | ENGINE BRACKET, REAR LH | 1 |
| | CNA6128K-1001035 | ENGINE BRACKET, REAR RH | 1 |
| | CNA6128Y-1001130 | ENGINE BRACKET, FRONT | 2 |
| | Q1811630TF2 | BOLT 16030150 | 8 |
| | WP9H336E40 | ENGINE | 1 |
| | | | |

| ASSB_NAME | PART NO. | NAME | QTY |
|---|---|---|---|
| ENGINE | | | |
| | | | |
| | | | |
| | | | |
| | | | |
| | | | |
| | | | |

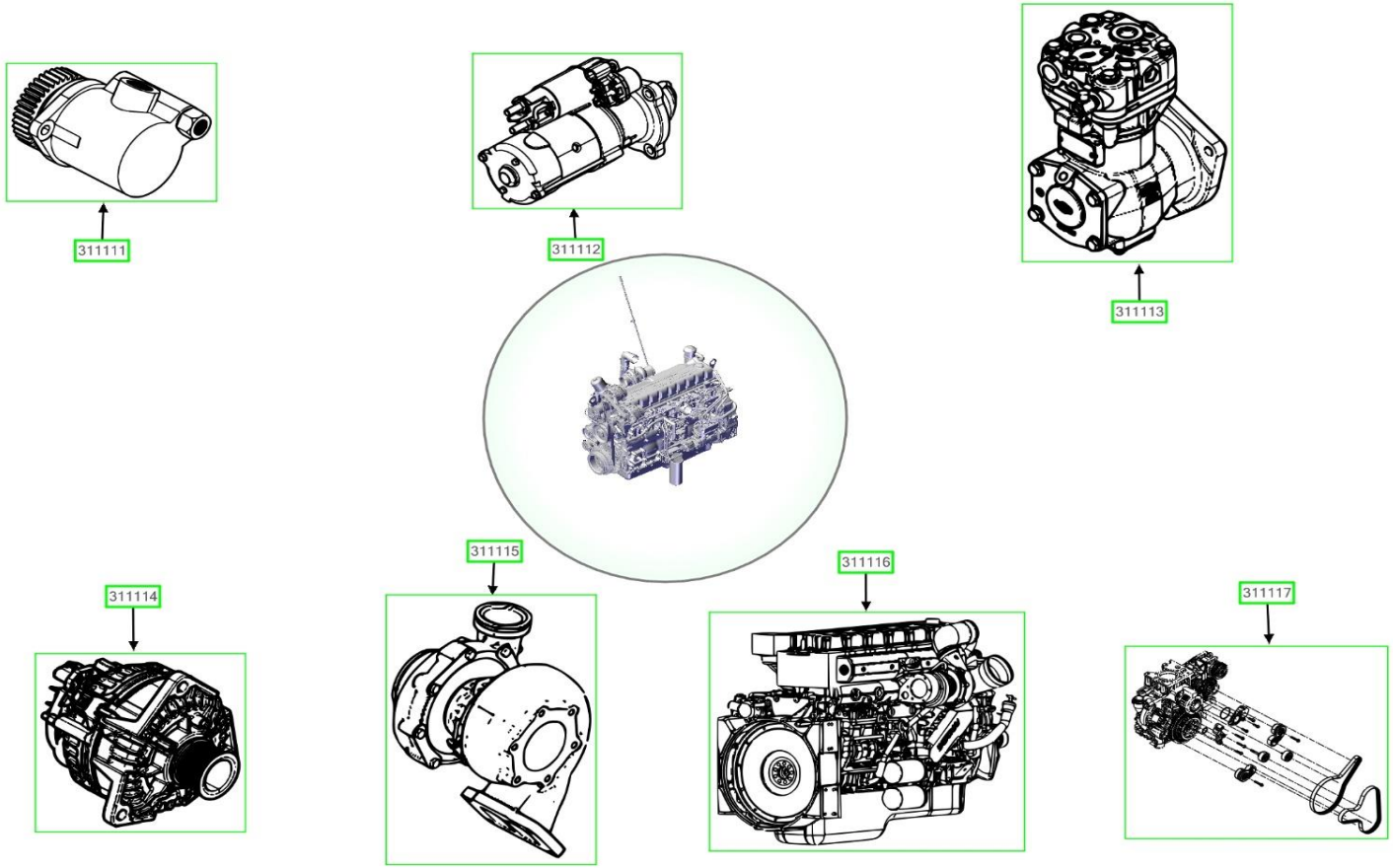


| ASSB_NAME | PART NO. | NAME | QTY |
|---|---|---|---|
| ENGINE | 311111 | HYDRAULIC PUMP ASSY | 1 |
| | 311112 | STARTER MOTOR ASSY | 1 |
| | 311113 | AIR COMPRESSOR ASSEMBLY | 1 |
| | 311114 | ALTERNATOR ASSY | 1 |
| | 311115 | TURBOCHARGER ASSY | 1 |
| | 311116 | BLOCK ENGINE | 1 |
| | 311117 | MINOR ITEMS | 1 |

| ASSB_NAME | PART NO. | NAME | QTY |
|---|---|---|---|
| ENGINE | | | |
| | | | |
| | | | |
| | | | |
| | | | |
| | | | |
| | | | |

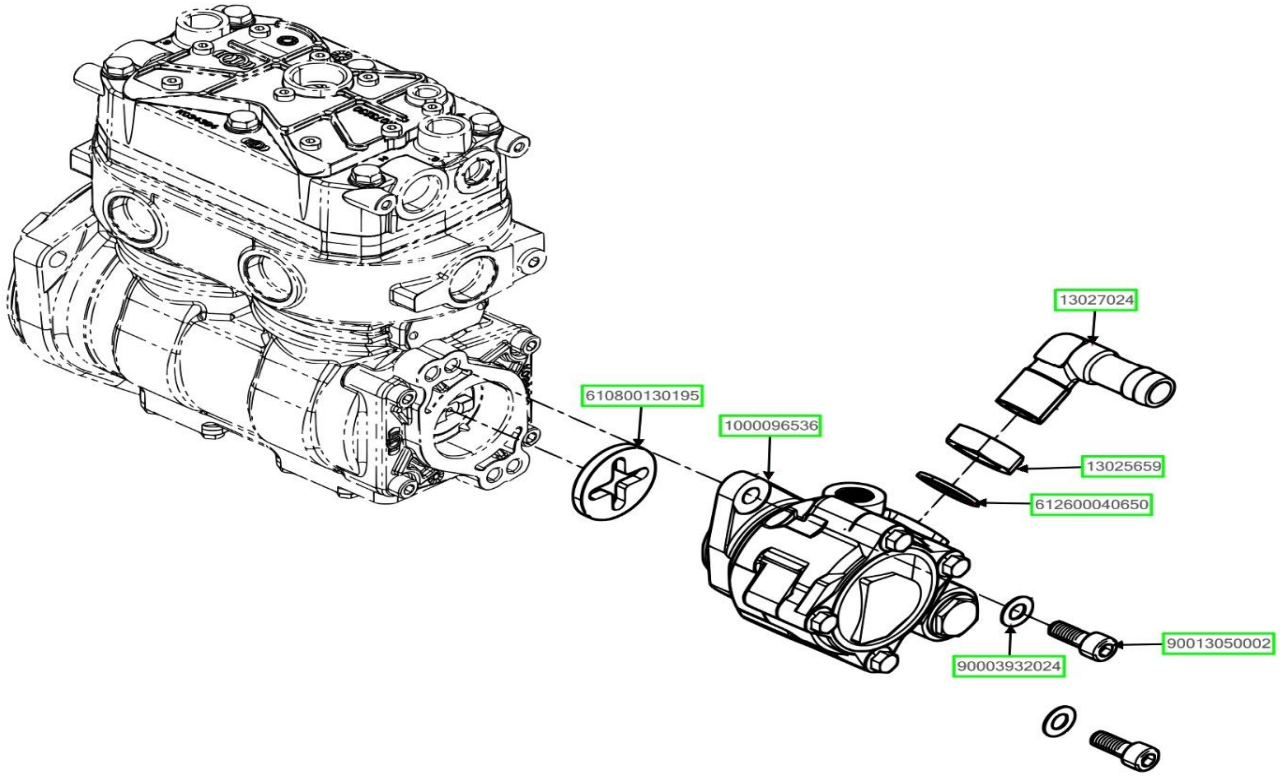


| ASSB_NAME | PART NO. | NAME | QTY |
|---|---|---|---|
| HYDRAULIC PUMP ASSY | 610800130195 | CROSS KEY | 1 |
| | 1000096536 | HYDRAULIC PUMP | 1 |
| | 13027024 | WATER PIPE CONNECTOR | 1 |
| | 13025659 | HEXAGON LOCK NUT | 1 |
| | 612600040650 | ASSEMBLED SEALING WASHER | 1 |
| | 90003932024 | WAVE SPRING WASHER | 2 |
| | 90013050002 | INNER HEXAGON SOCKET HEAD CAP SCREW | 2 |

| ASSB_NAME | PART NO. | NAME | QTY |
|---|---|---|---|
| HYDRAULIC PUMP ASSY | | | |
| | | | |
| | | | |
| | | | |
| | | | |
| | | | |
| | | | |

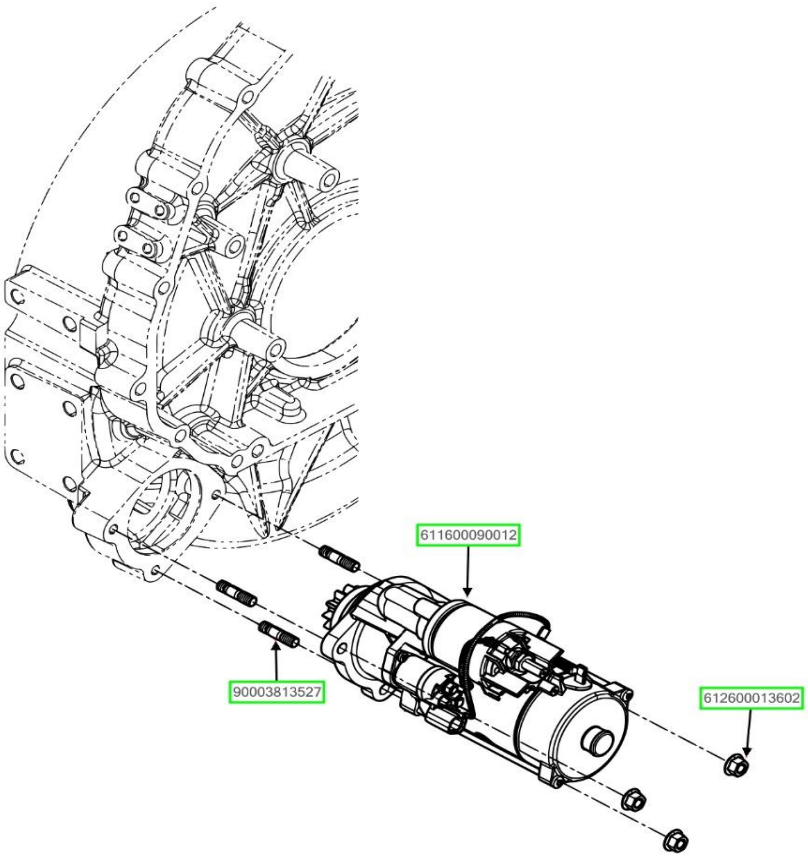


| ASSB_NAME | PART NO. | NAME | QTY |
|---|---|---|---|
| STARTER MOTOR ASSY | 90003813527 | DOUBLE END STUD | 3 |
| | 611600090012 | STARTER MOTOR | 1 |
| | 612600013602 | HEXAGON FLANGE NUT | 3 |
| | | | |
| | | | |
| | | | |
| | | | |

| ASSB_NAME | PART NO. | NAME | QTY |
|---|---|---|---|
| STARTER MOTOR ASSY | | | |
| | | | |
| | | | |
| | | | |
| | | | |
| | | | |
| | | | |

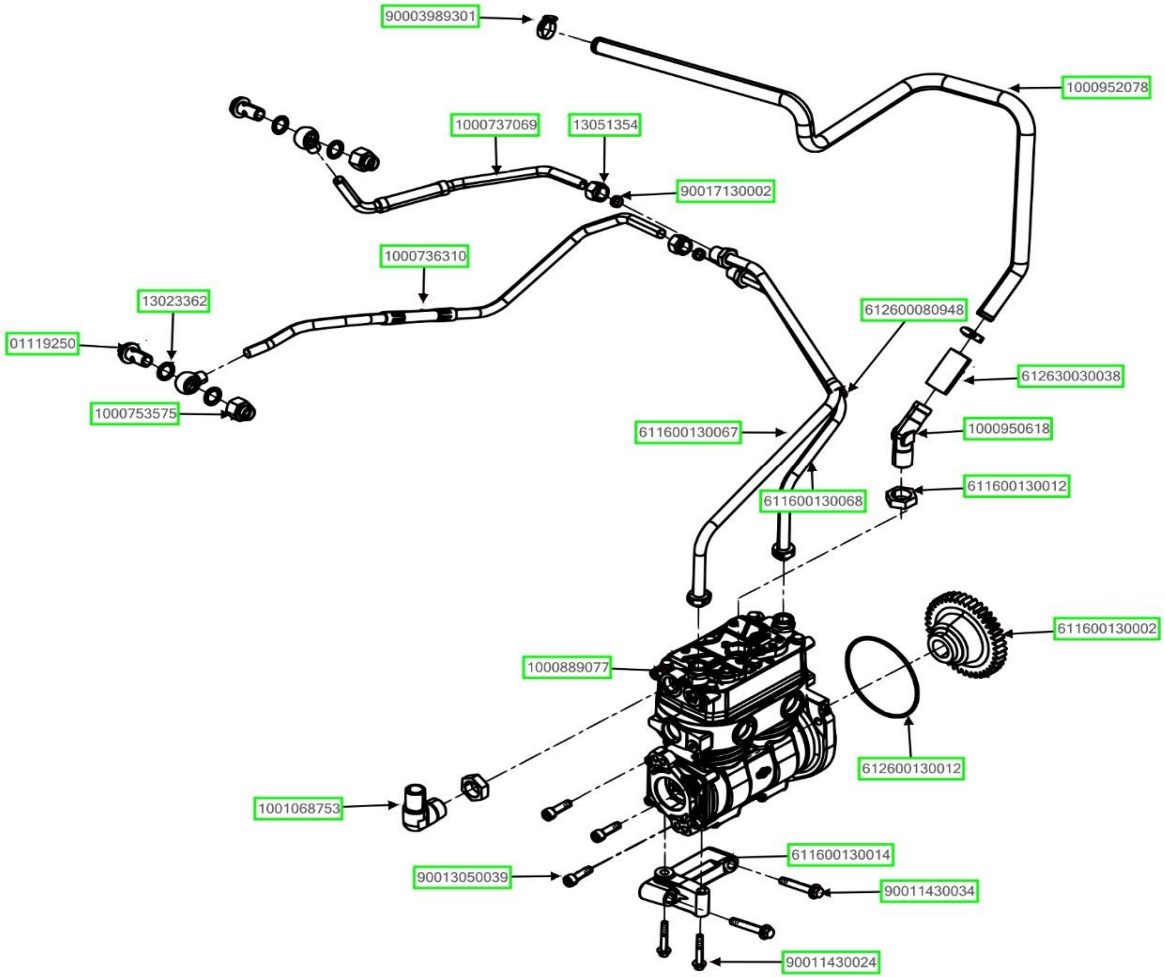


| ASSB_NAME | PART NO. | NAME | QTY |
|---|---|---|---|
| AIR COMPRESSOR ASSEMBLY | 1119250 | HOLLOW SCREW | 2 |
| | 13023362 | ASSEMBLED SEALING WASHER | 4 |
| | 1000753575 | JOINT BODY | 2 |
| | 1000736310 | AIR COMPRESSOR WATER PIPE ASSY | 1 |
| | 1000737069 | AIR COMPRESSOR WATER PIPE ASSY | 1 |
| | 13051354 | NUT | 2 |
| | 90017130002 | FERRULE | 2 |

| ASSB_NAME | PART NO. | NAME | QTY |
|---|---|---|---|
| AIR COMPRESSOR ASSEMBLY | 611600130067 | AIR COMPRESSOR WATER PIPE | 1 |
| | 611600130068 | AIR COMPRESSOR WATER PIPE | 1 |
| | 612600080948 | PIPE CLAMP ASSEMBLY | 1 |
| | 90003989301 | CLAMP | 2 |
| | 1000952078 | AIR COMPRESSOR AIR-INLET PIPE | 1 |
| | 612630030038 | AIR CONNECTING RUBBER PIPE | 1 |
| | 1000950618 | AIR PIPE CONNECTOR | 1 |

| ASSB_NAME | PART NO. | NAME | QTY |
|---|---|---|---|
| AIR COMPRESSOR ASSEMBLY | 611600130012 | O-RING | 1 |
| | 612600130012 | HEXAGON THIN NUT | 2 |
| | 611600130002 | AIR COMPRESSOR GEAR | 1 |
| | 611600130014 | AIR COMPRESSOR BRACKET | 1 |
| | 90011430034 | HEXAGON FLANGE WITH TOOTH BOLT | 2 |
| | 90011430024 | HEXAGON FLANGE WITH TOOTH BOLT | 2 |
| | 90013050039 | INNER HEXAGON SOCKET HEAD CAP SCREW | 3 |

| ASSB_NAME | PART NO. | NAME | QTY |
|---|---|---|---|
| AIR COMPRESSOR ASSEMBLY | 1001068753 | PIPE JOINT | 1 |
| | 1000889077 | AIR COMPRESSOR ASSEMBLY | 1 |

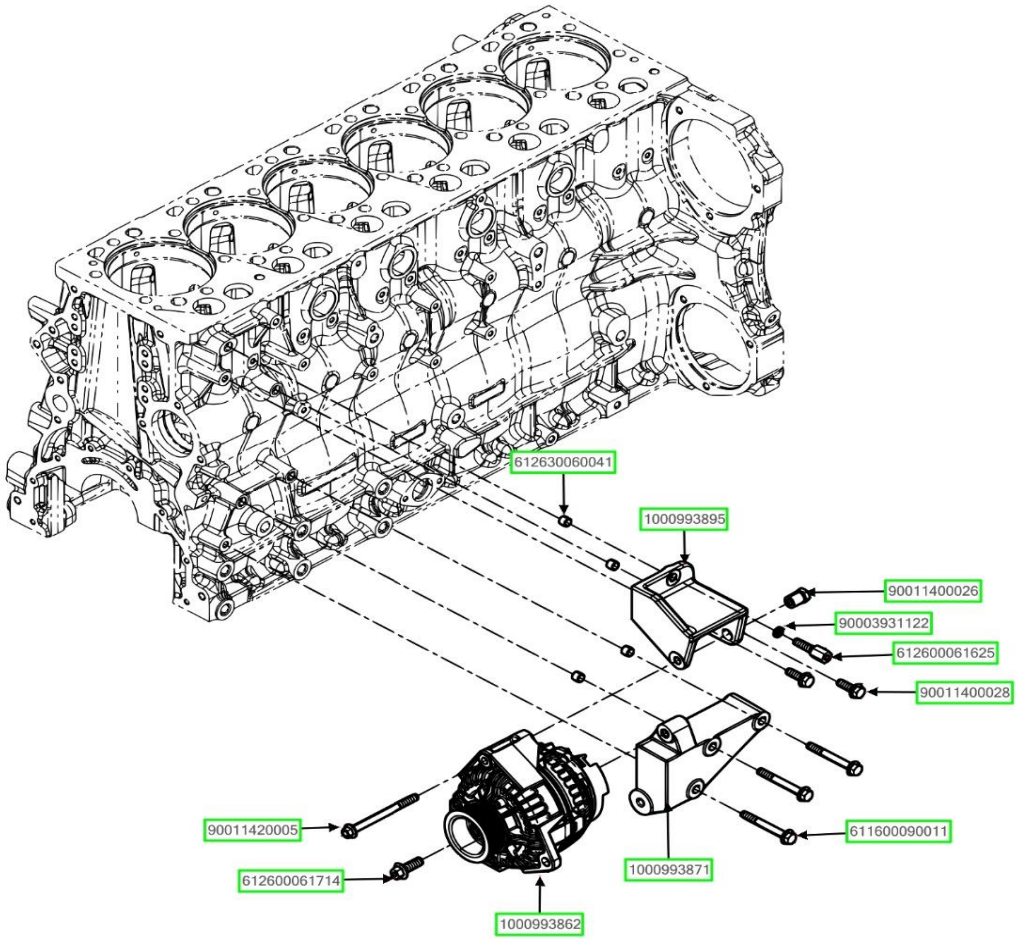


| ASSB_NAME | PART NO. | NAME | QTY |
|---|---|---|---|
| ALTERNATOR ASSY | 612630060041 | PLASTIC INSERT | 4 |
| | 1000993895 | ALTERNATOR BRACKET | 1 |
| | 611600090011 | NUT | 1 |
| | 90003931122 | SPRING WASHER | 1 |
| | 612600061625 | BACK-UP BLOCK | 1 |
| | 90011400028 | HEXAGON FLANGE BOLT | 2 |
| | 90011400026 | HEXAGON FLANGE BOLT | 3 |

| ASSB_NAME | PART NO. | NAME | QTY |
|---|---|---|---|
| ALTERNATOR ASSY | 1000993871 | ALTERNATOR BRACKET | 1 |
| | 1000993862 | ALTERNATOR | 1 |
| | 90011420005 | HEXAGON FLANGE BOLT | 1 |
| | 612600061714 | HEXAGON FLANGE WITH TOOTH BOLT | 1 |
| | | | |
| | | | |
| | | | |

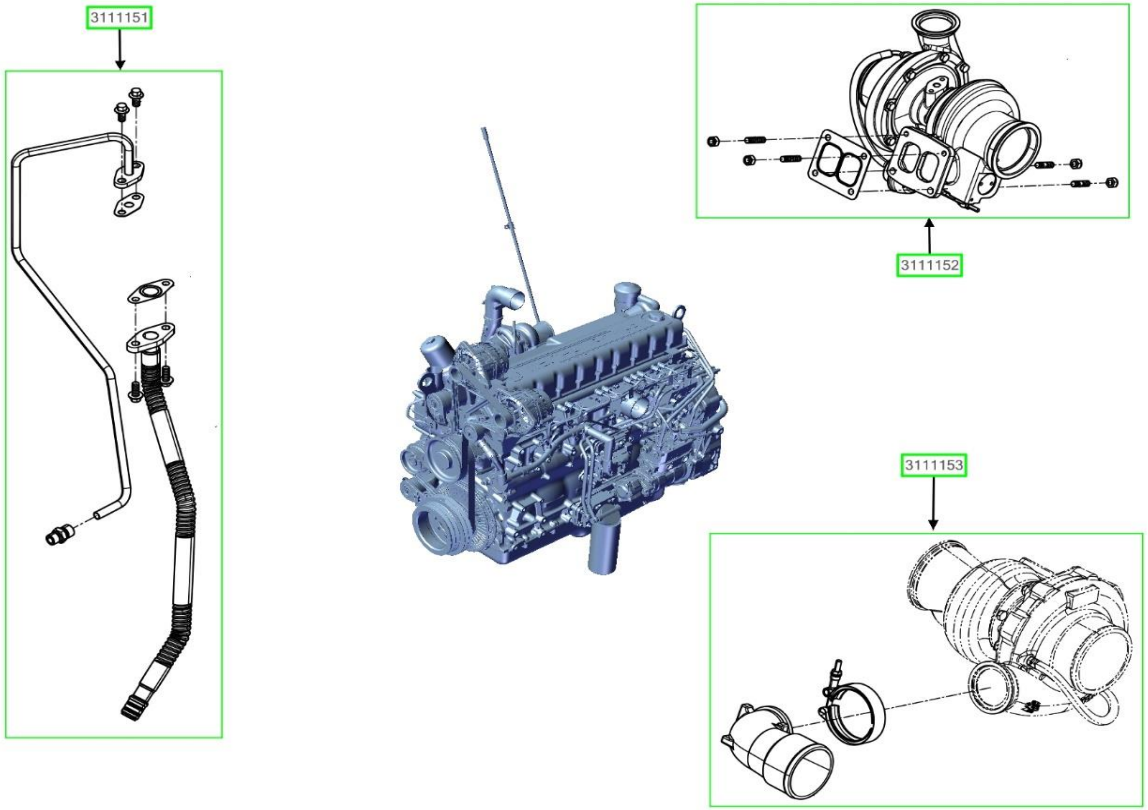


| ASSB_NAME | PART NO. | NAME | QTY |
|---|---|---|---|
| TURBOCHARGER ASSY | 3111151 | OIL PIPE ASSY | 1 |
| | 3111152 | TURBOCHARGER | 1 |
| | 3111153 | AIR PIPE | 1 |
| | | | |
| | | | |
| | | | |
| | | | |

| ASSB_NAME | PART NO. | NAME | QTY |
|---|---|---|---|
| TURBOCHARGER ASSY | | | |
| | | | |
| | | | |
| | | | |
| | | | |
| | | | |
| | | | |

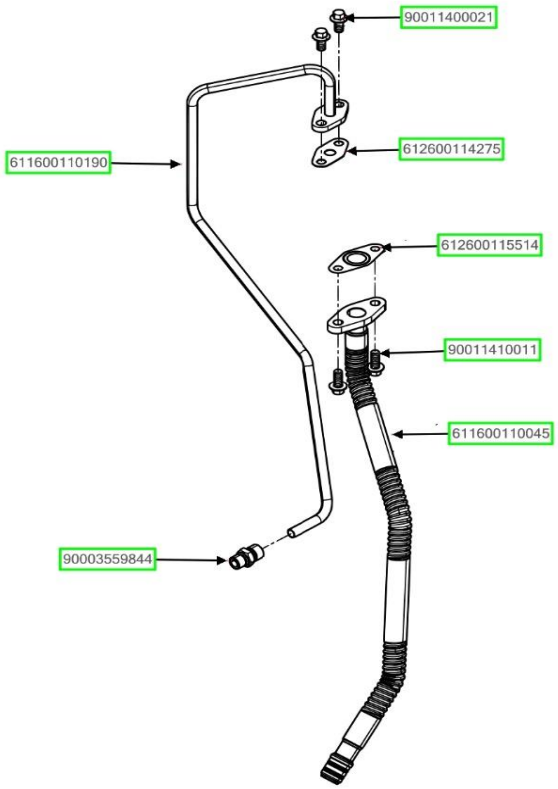


| ASSB_NAME | PART NO. | NAME | QTY | ASSB_NAME | PART NO. | NAME | QTY |
|---|---|---|---|---|---|---|---|
| OIL PIPE ASSY | 90011400021 | HEXAGON FLANGE BOLT | 2 | OIL PIPE ASSY | | | |
| | 611600110190 | TURBOCHARGER OIL PIPE ASSEMBLY | 1 | | | | |
| | 612600114275 | GASKET | 1 | | | | |
| | 612600115514 | GASKET | 1 | | | | |
| | 90011410011 | HEXAGON FLANGE BOLT | 2 | | | | |
| | 611600110045 | TURBOCHARGER OIL PIPE ASSEMBLY | 1 | | | | |
| | 90003559844 | PIPE JOINT | 1 | | | | |

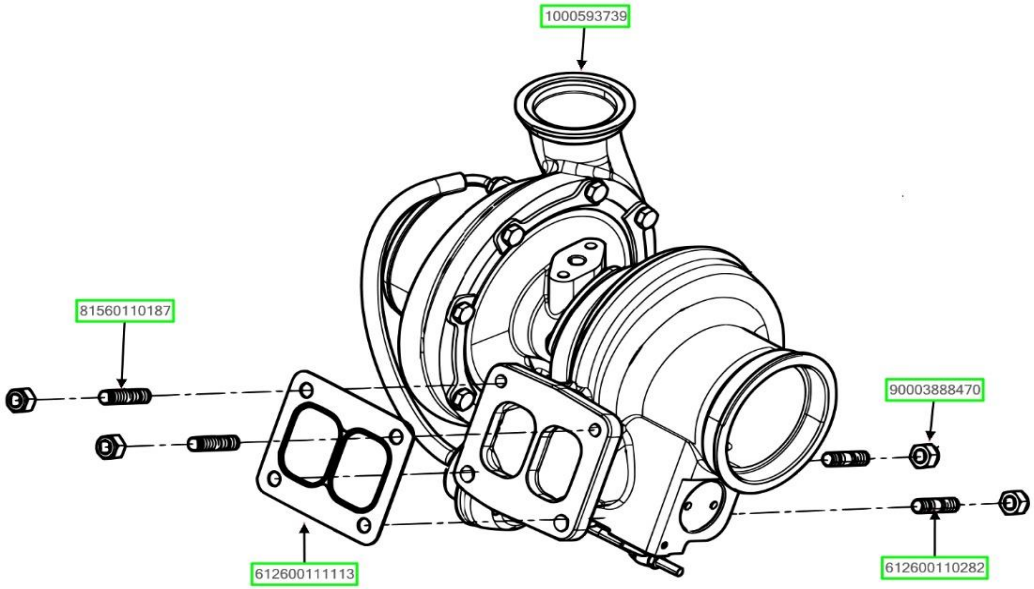


| ASSB_NAME | PART NO. | NAME | QTY |
|---|---|---|---|
| TURBOCHARGER | 1000593739 | TURBOCHARGER | 1 |
| | 90003888470 | PREVAILING TORQUE TYPE ALL-METAL HEXAGON NUT, | 4 |
| | 612600110282 | DOUBLE END STUD | 2 |
| | 612600111113 | TURBOCHARGER WASHER | 1 |
| | 81560110187 | DOUBLE END STUD | 2 |
| | | | |
| | | | |

| ASSB_NAME | PART NO. | NAME | QTY |
|---|---|---|---|
| TURBOCHARGER | | | |
| | | | |
| | | | |
| | | | |
| | | | |
| | | | |
| | | | |

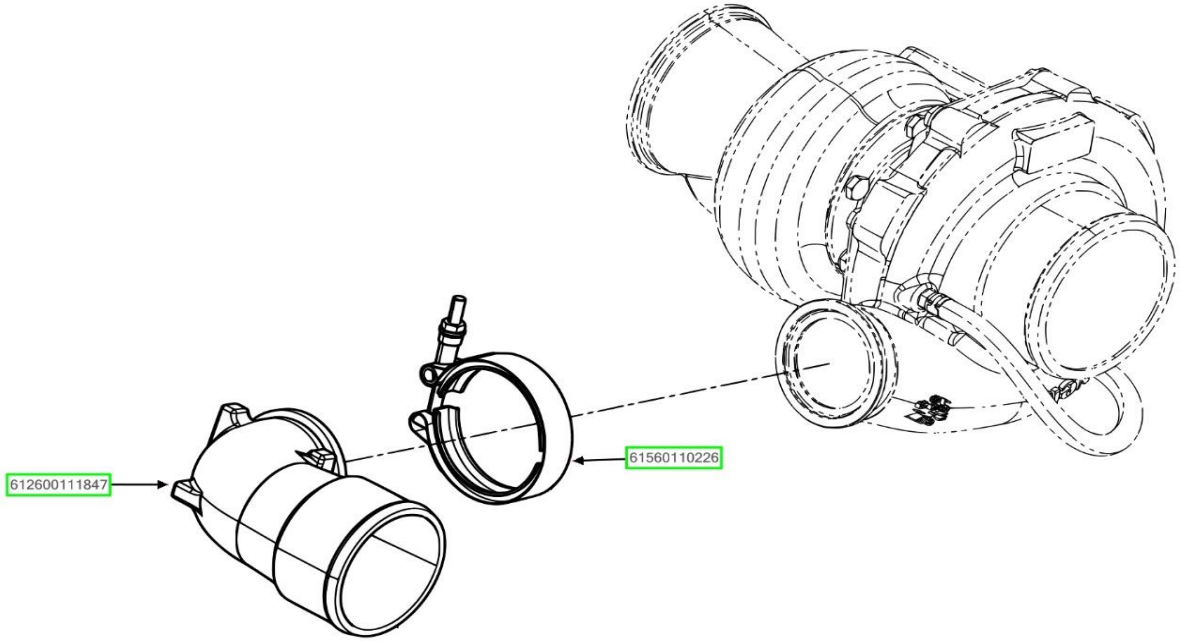


| ASSB_NAME | PART NO. | NAME | QTY |
|---|---|---|---|
| AIR PIPE | 612600111847 | PIPE | 1 |
| | 61560110226 | CLAMP | 1 |
| | | | |
| | | | |
| | | | |
| | | | |
| | | | |

| ASSB_NAME | PART NO. | NAME | QTY |
|---|---|---|---|
| AIR PIPE | | | |
| | | | |
| | | | |
| | | | |
| | | | |
| | | | |
| | | | |

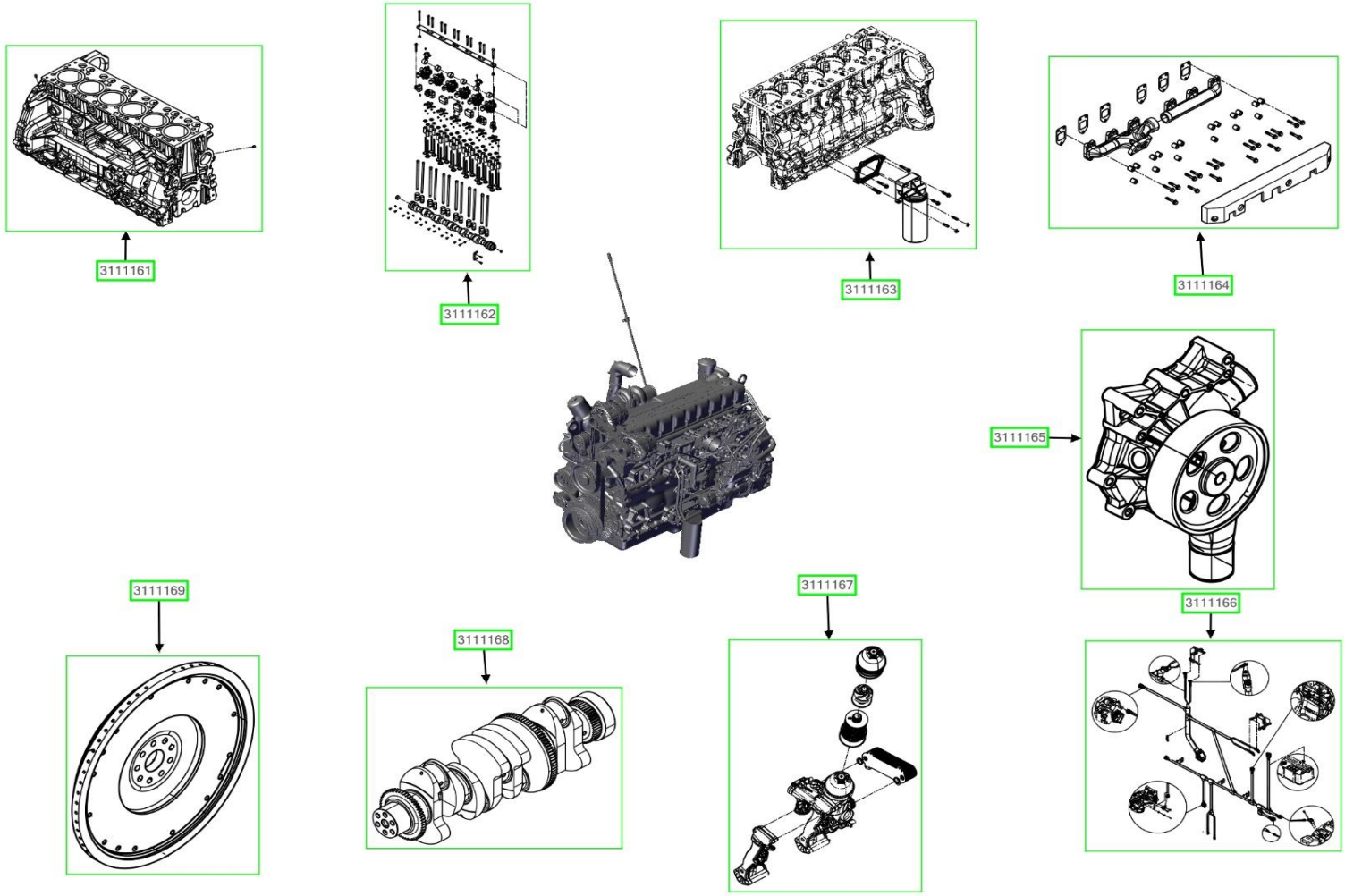


| ASSB_NAME | PART NO. | NAME | QTY |
|---|---|---|---|
| BLOCK ENGINE | 3111161 | CYLINDER GROUP | 1 |
| | 3111162 | VALVE SYSTEM | 1 |
| | 3111163 | FUEL SYSTEM, ENGINE | 1 |
| | 3111164 | INTAKE AND EXHAUST SYSTEM | 1 |
| | 3111165 | COOLING SYSTEM | 1 |
| | 3111166 | ELECTRICAL AND SENSOR | 1 |
| | 3111167 | OIL SYSTEM | 1 |

| ASSB_NAME | PART NO. | NAME | QTY |
|---|---|---|---|
| BLOCK ENGINE | 3111168 | TRANSMISSION SYSTEM | 1 |
| | 3111169 | FLYWHEEL GROUP | 1 |
| | | | |
| | | | |
| | | | |
| | | | |
| | | | |

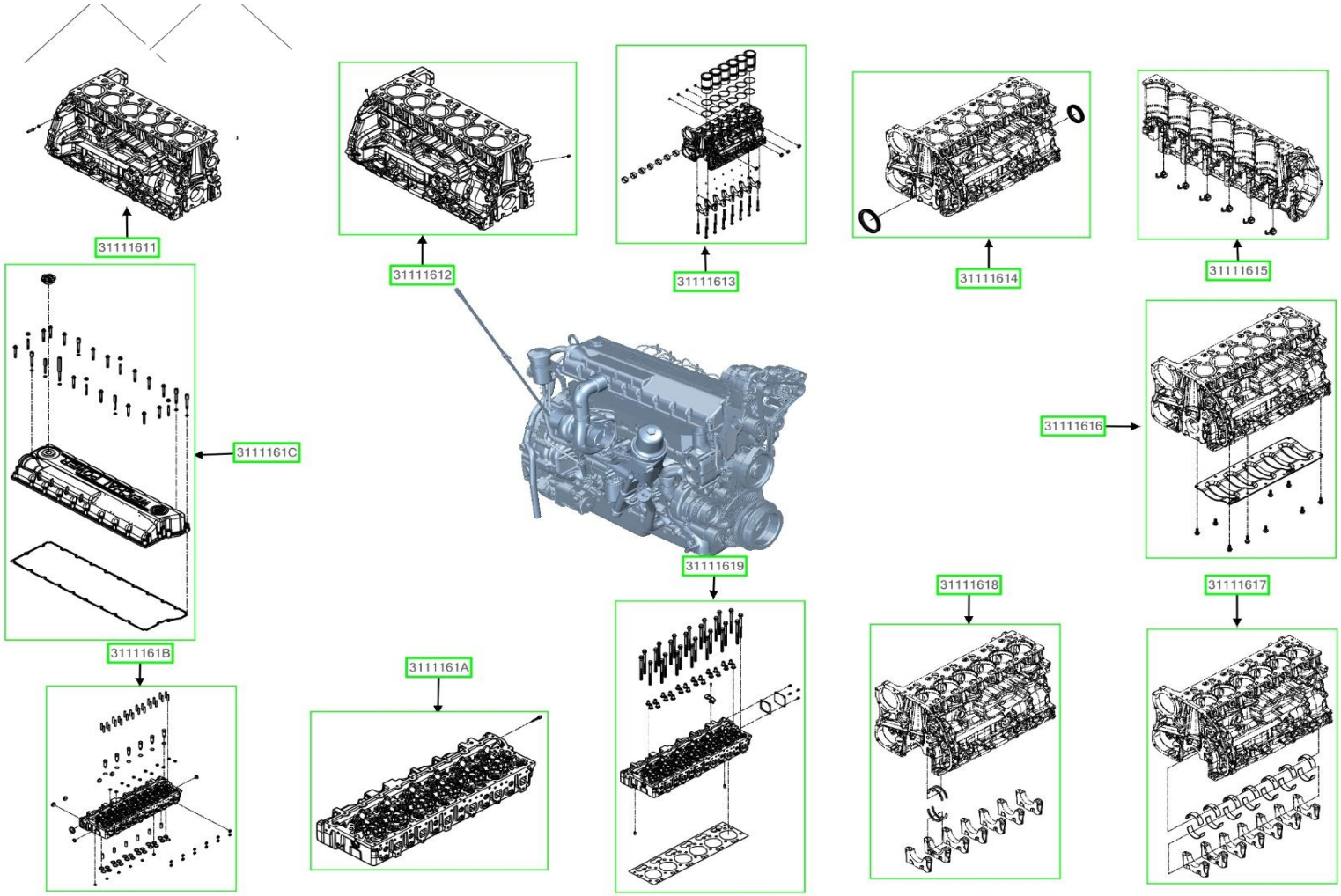


| ASSB_NAME | PART NO. | NAME | QTY |
|---|---|---|---|
| CYLINDER GROUP | 31111611 | ENGINE BLOCK GROUP | 1 |
| | 31111612 | CRANKCASE ASSEMBLY | 1 |
| | 31111613 | CRANKCASE PRE-ASSEMBLY | 1 |
| | 31111614 | OIL SEAL GROUP | 1 |
| | 31111615 | SPRAY NOZZLE GROUP | 1 |
| | 31111616 | ENGINE BLOCK REINFORCING PLATE G | 1 |
| | 31111617 | MAIN BEARING GROUP | 1 |

| ASSB_NAME | PART NO. | NAME | QTY |
|---|---|---|---|
| CYLINDER GROUP | 31111618 | THRUST PLATE GROUP | 1 |
| | 31111619 | CYLINDER HEAD GROUP | 1 |
| | 3111161A | CYLINDER HEAD ASSEMBLY | 1 |
| | 3111161B | CYLINDER HEAD SUBASSEMBLY | 1 |
| | 3111161C | CYLINDER HEAD COVER GROUP | 1 |
| | | | |
| | | | |

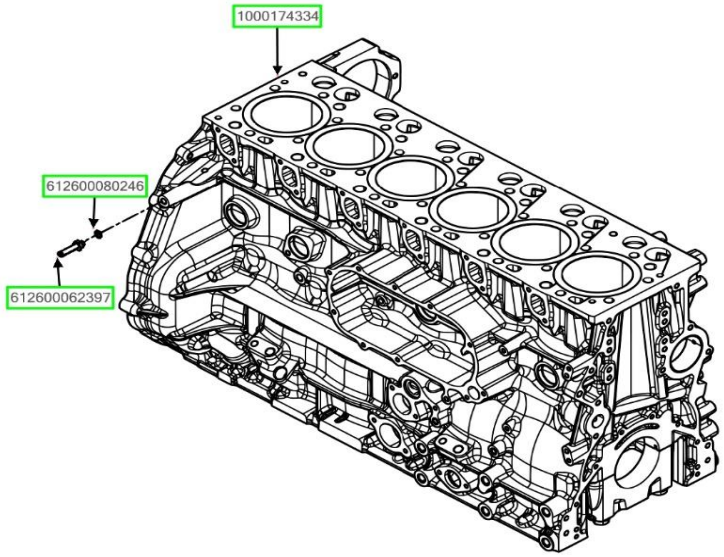


| ASSB_NAME | PART NO. | NAME | QTY |
|---|---|---|---|
| ENGINE BLOCK GROUP | 1000174334 | CRANKCASE ASSEMBLY | 1 |
| | 612600080246 | WASHER | 1 |
| | 612600062397 | PIPE JOINT | 1 |
| | | | |
| | | | |
| | | | |
| | | | |

| ASSB_NAME | PART NO. | NAME | QTY |
|---|---|---|---|
| ENGINE BLOCK GROUP | | | |
| | | | |
| | | | |
| | | | |
| | | | |
| | | | |
| | | | |

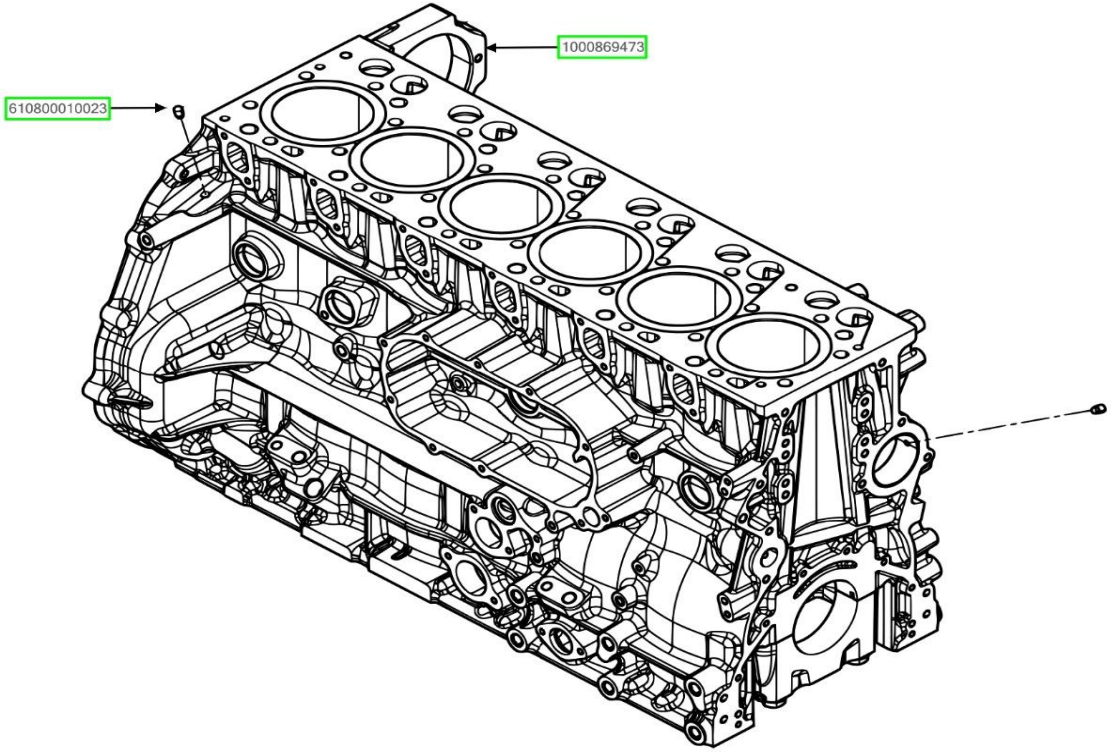


| ASSB_NAME | PART NO. | NAME | QTY |
|---|---|---|---|
| CRANKCASE ASSEMBLY | 610800010023 | PULLING RIVET | 2 |
| | 1000869473 | CRANKCASE PRE-ASSEMBLY | 1 |
| | | | |
| | | | |
| | | | |
| | | | |
| | | | |

| ASSB_NAME | PART NO. | NAME | QTY |
|---|---|---|---|
| CRANKCASE ASSEMBLY | | | |
| | | | |
| | | | |
| | | | |
| | | | |
| | | | |
| | | | |

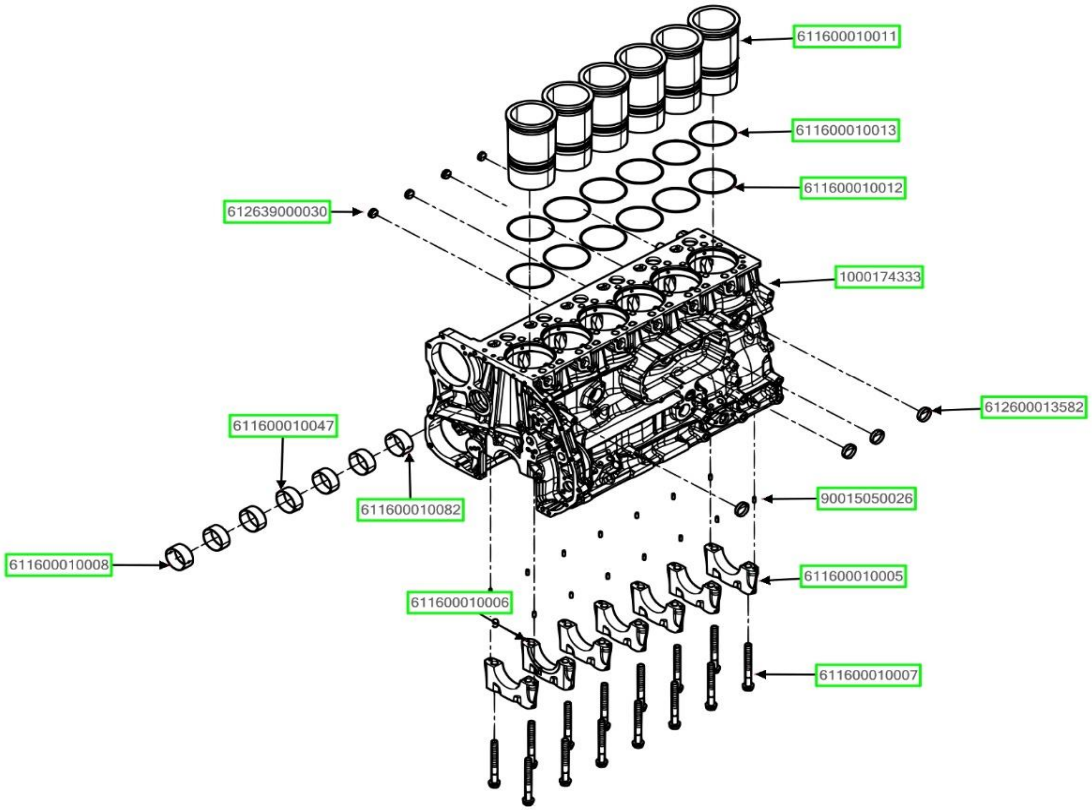


| ASSB_NAME | PART NO. | NAME | QTY |
|---|---|---|---|
| CRANKCASE PRE-ASSEMBLY | 611600010011 | CYLINDER LINER | 6 |
| | 611600010013 | O-RING | 6 |
| | 611600010012 | O-RING | 6 |
| | 1000174333 | ENGINE BLOCK | 1 |
| | 612600013582 | BOWL PLUG | 5 |
| | 90015050026 | PARALLEL PIN | 14 |
| | 611600010005 | MAIN BEARING CAP | 6 |

| ASSB_NAME | PART NO. | NAME | QTY |
|---|---|---|---|
| CRANKCASE PRE-ASSEMBLY | 611600010007 | MAIN BEARING BOLT | 14 |
| | 611600010006 | THRUST BEARING COVER | 1 |
| | 611600010008 | CAMSHAFT BUSH | 1 |
| | 611600010047 | CAMSHAFT BUSH | 5 |
| | 611600010082 | CAMSHAFT BUSH | 1 |
| | 612639000030 | LEBES PLUG | 4 |
| | | | |

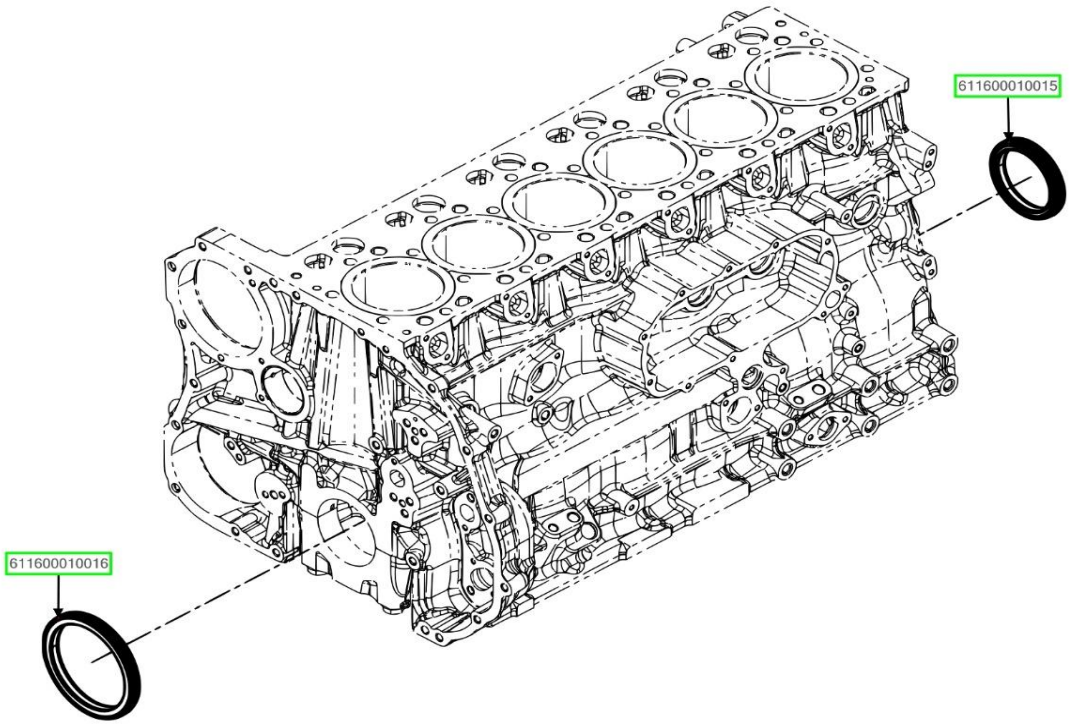


| ASSB_NAME | PART NO. | NAME | QTY |
|---|---|---|---|
| OIL SEAL GROUP | 611600010015 | FRONT OIL SEAL | 1 |
| | 611600010016 | REAR OIL SEAL | 1 |
| | | | |
| | | | |
| | | | |
| | | | |
| | | | |

| ASSB_NAME | PART NO. | NAME | QTY |
|---|---|---|---|
| OIL SEAL GROUP | | | |
| | | | |
| | | | |
| | | | |
| | | | |
| | | | |
| | | | |

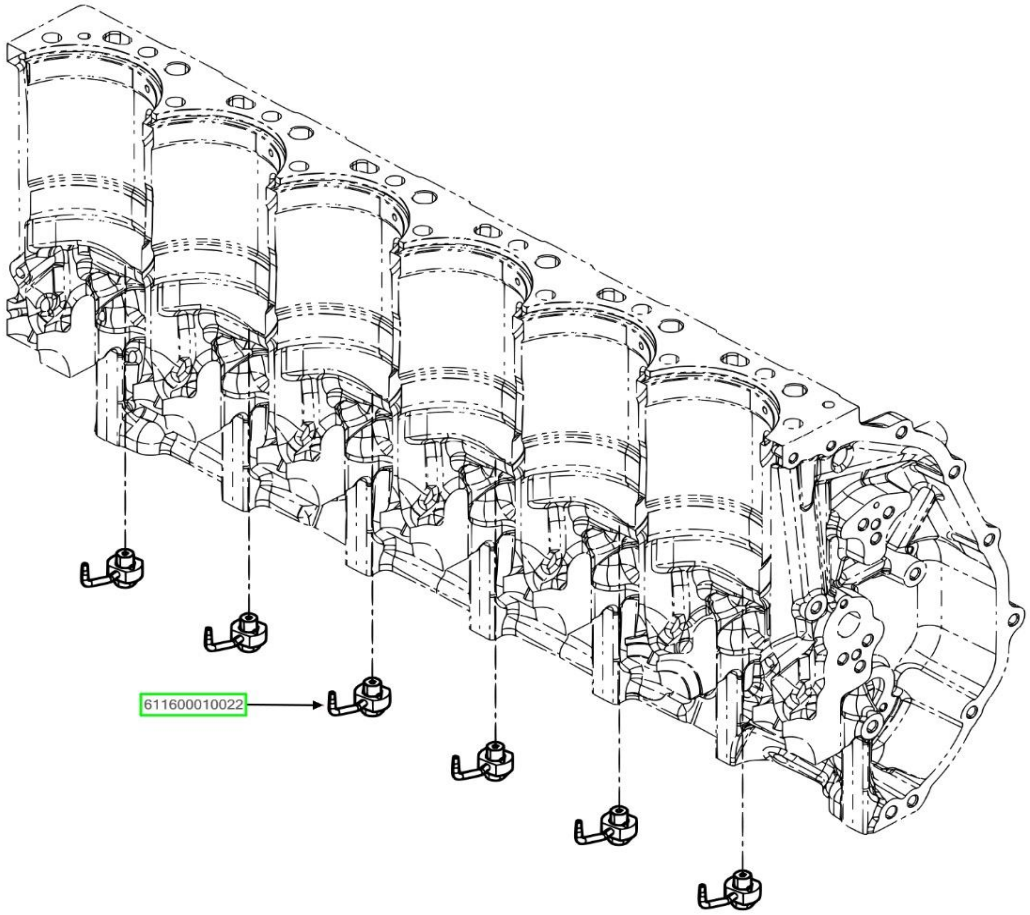


| ASSB_NAME | PART NO. | NAME | QTY |
|---|---|---|---|
| SPRAY NOZZLE GROUP | 611600010022 | PISTON NOZZLE ASSEMBLY | 6 |
| | | | |
| | | | |
| | | | |
| | | | |
| | | | |
| | | | |

| ASSB_NAME | PART NO. | NAME | QTY |
|---|---|---|---|
| SPRAY NOZZLE GROUP | | | |
| | | | |
| | | | |
| | | | |
| | | | |
| | | | |
| | | | |

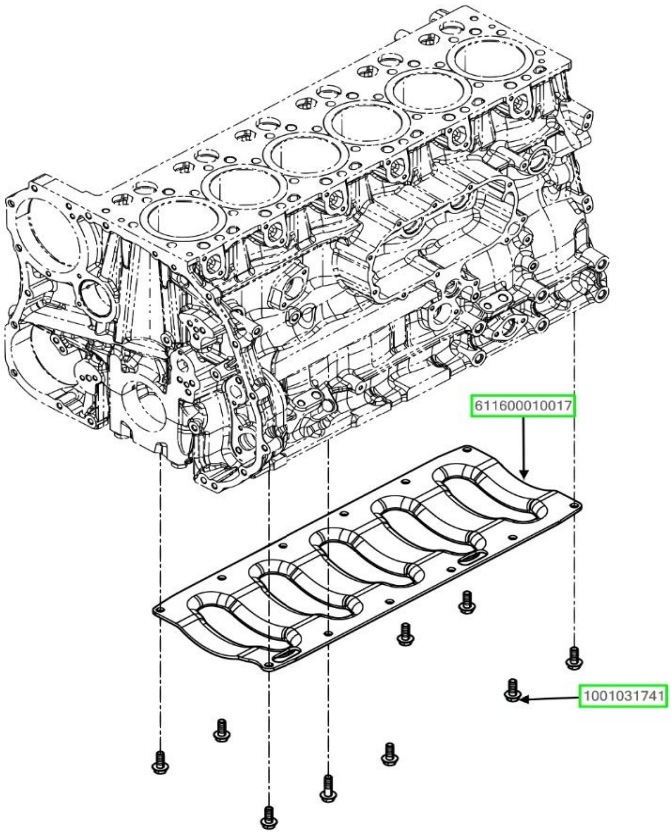


| ASSB_NAME | PART NO. | NAME | QTY |
|---|---|---|---|
| ENGINE BLOCK REINFORCING PLATE GROUP | 611600010017 | REINFORCING PLATE OF ENGINE BLOCK | 4 |
| | 1001031741 | HEXAGON FLANGE BOLT | 9 |
| | | | |
| | | | |
| | | | |
| | | | |
| | | | |

| ASSB_NAME | PART NO. | NAME | QTY |
|---|---|---|---|
| ENGINE BLOCK REINFORCING PLATE GROUP | | | |
| | | | |
| | | | |
| | | | |
| | | | |
| | | | |
| | | | |

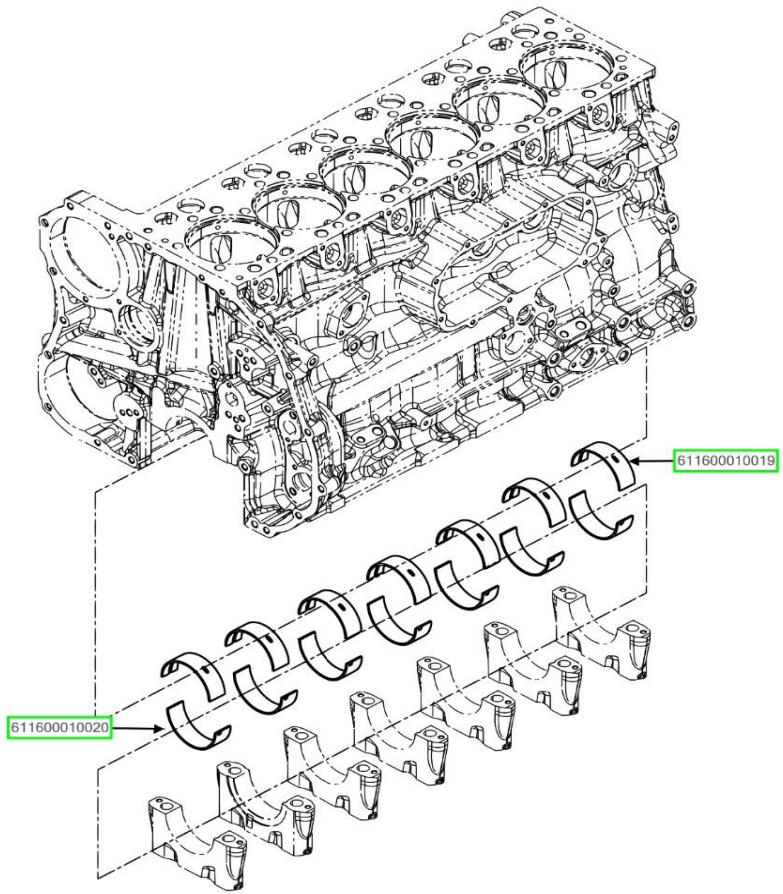


| ASSB_NAME | PART NO. | NAME | QTY |
|---|---|---|---|
| MAIN BEARING GROUP | 611600010019 | MAIN BEARING UPPER SHELL | 7 |
| | 611600010020 | MAIN BEARING LOWER SHELL | 7 |
| | | | |
| | | | |
| | | | |
| | | | |
| | | | |

| ASSB_NAME | PART NO. | NAME | QTY |
|---|---|---|---|
| MAIN BEARING GROUP | | | |
| | | | |
| | | | |
| | | | |
| | | | |
| | | | |
| | | | |

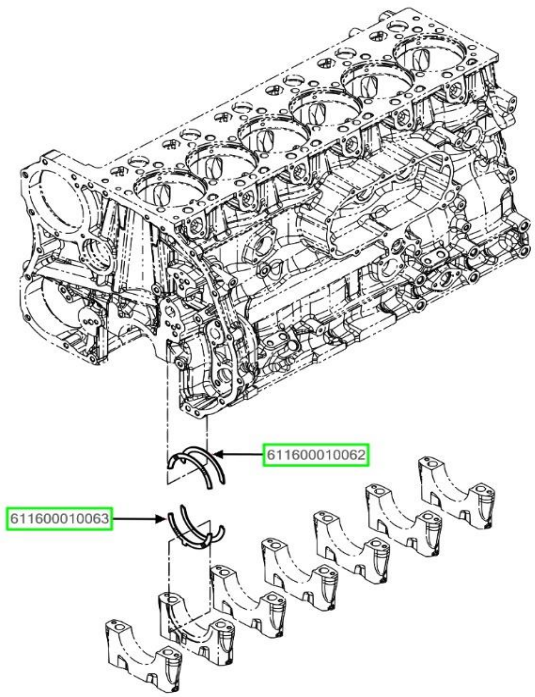


| ASSB_NAME | PART NO. | NAME | QTY |
|---|---|---|---|
| THRUST PLATE GROUP | 611600010062 | UPPER THRUST PLATE | 2 |
| | 611600010063 | LOWER THRUST PLATE | 2 |
| | | | |
| | | | |
| | | | |
| | | | |
| | | | |

| ASSB_NAME | PART NO. | NAME | QTY |
|---|---|---|---|
| THRUST PLATE GROUP | | | |
| | | | |
| | | | |
| | | | |
| | | | |
| | | | |
| | | | |

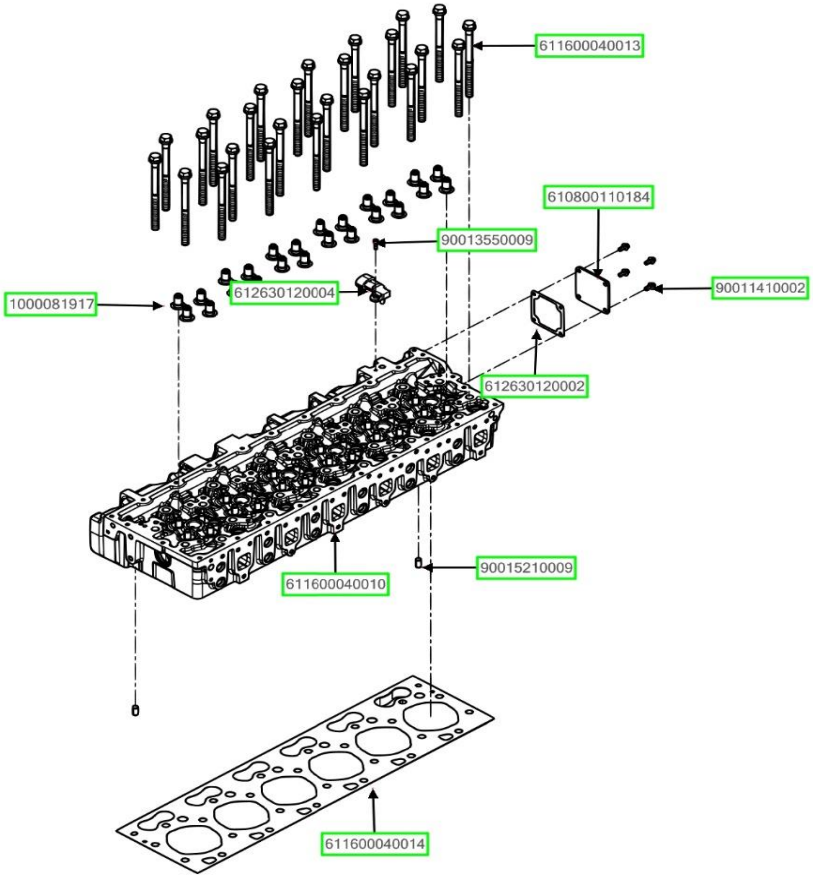


| ASSB_NAME | PART NO. | NAME | QTY |
|---|---|---|---|
| CYLINDER HEAD GROUP | 611600040013 | CYLINDER HEAD BOLT | 26 |
| | 90013550009 | INNER HEXAGON SOCKET HEAD CAP SCREW | 1 |
| | 612630120004 | PRESSURE AND TEMPERATURE SENSOR | 1 |
| | 90011410002 | HEXAGON FLANGE BOLT | 3 |
| | 610800110184 | INTAKE COVER | 1 |
| | 612630120002 | GASKET | 1 |
| | 611600040010 | CYLINDER HEAD ASSEMBLY | 1 |

| ASSB_NAME | PART NO. | NAME | QTY |
|---|---|---|---|
| CYLINDER HEAD GROUP | 90015210009 | PARALLEL PIN | 2 |
| | 611600040014 | CYLINDER HEAD GASKET | 1 |
| | 1000081917 | VALVE STEM SEAL | 24 |
| | | | |
| | | | |
| | | | |
| | | | |

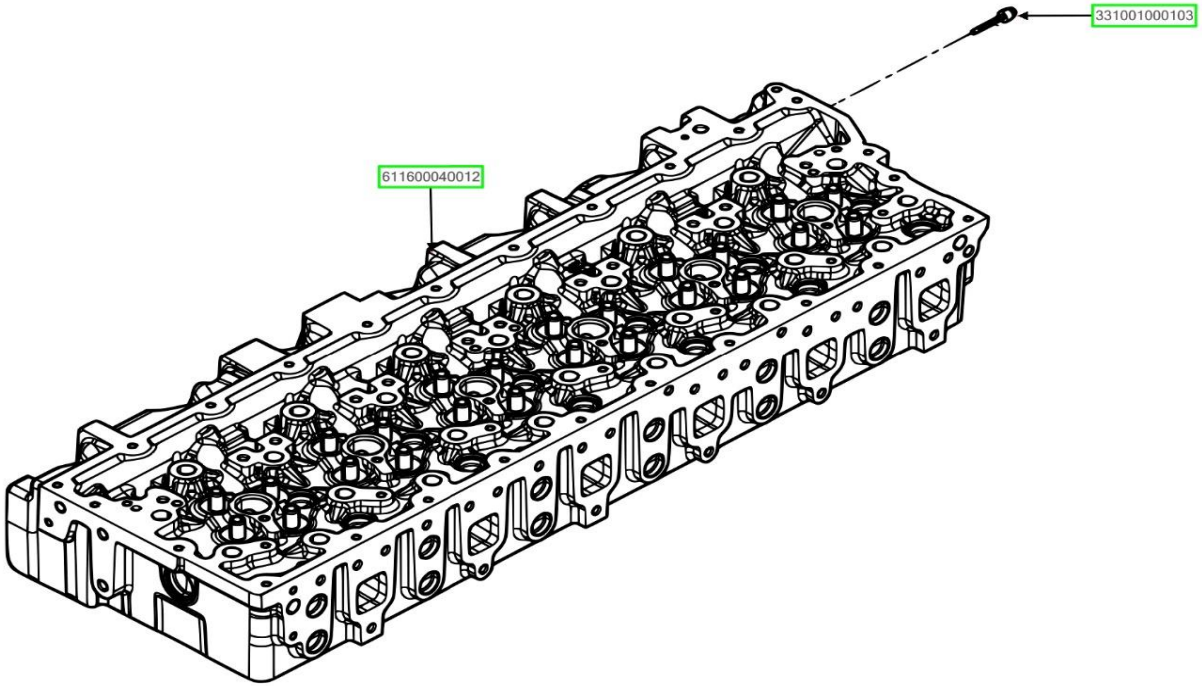


| ASSB_NAME | PART NO. | NAME | QTY |
|---|---|---|---|
| CYLINDER HEAD ASSEMBLY | 331001000103 | PULLING RIVET | 1 |
| | 611600040012 | CYLINDER HEAD SUBASSEMBLY | 1 |
| | | | |
| | | | |
| | | | |
| | | | |
| | | | |

| ASSB_NAME | PART NO. | NAME | QTY |
|---|---|---|---|
| CYLINDER HEAD ASSEMBLY | | | |
| | | | |
| | | | |
| | | | |
| | | | |
| | | | |
| | | | |

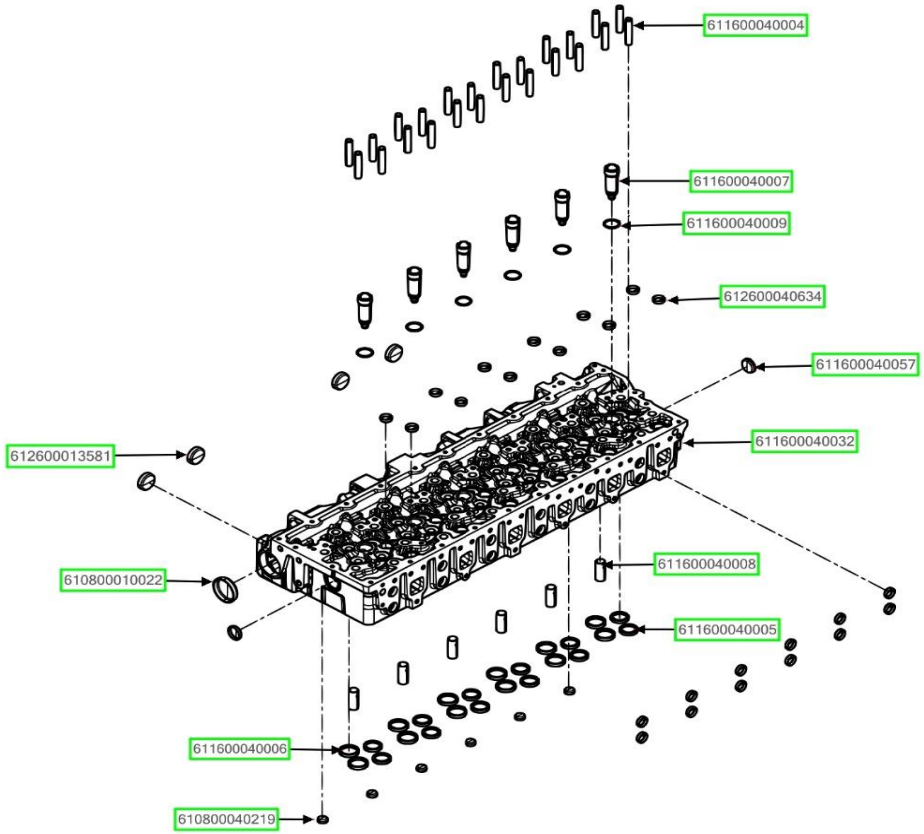


| ASSB_NAME | PART NO. | NAME | QTY |
|---|---|---|---|
| CYLINDER HEAD SUBASSEMBLY | 611600040004 | VALVE GUIDE | 24 |
| | 611600040007 | INJECTOR BUSH | 6 |
| | 611600040009 | SEAL RING | 6 |
| | 612600040634 | BOWL PLUG | 24 |
| | 611600040057 | BOWL PLUG | 2 |
| | 611600040032 | CYLINDER HEAD | 1 |
| | 611600040008 | WATER PIPE | 6 |

| ASSB_NAME | PART NO. | NAME | QTY |
|---|---|---|---|
| CYLINDER HEAD SUBASSEMBLY | 611600040005 | EXHAUST VALVE SEAT | 12 |
| | 610800040219 | BOWL PLUG | 6 |
| | 611600040006 | INTAKE VALVE SEAT | 12 |
| | 610800010022 | BOWL PLUG | 1 |
| | 612600013581 | BOWL PLUG | 4 |
| | | | |
| | | | |

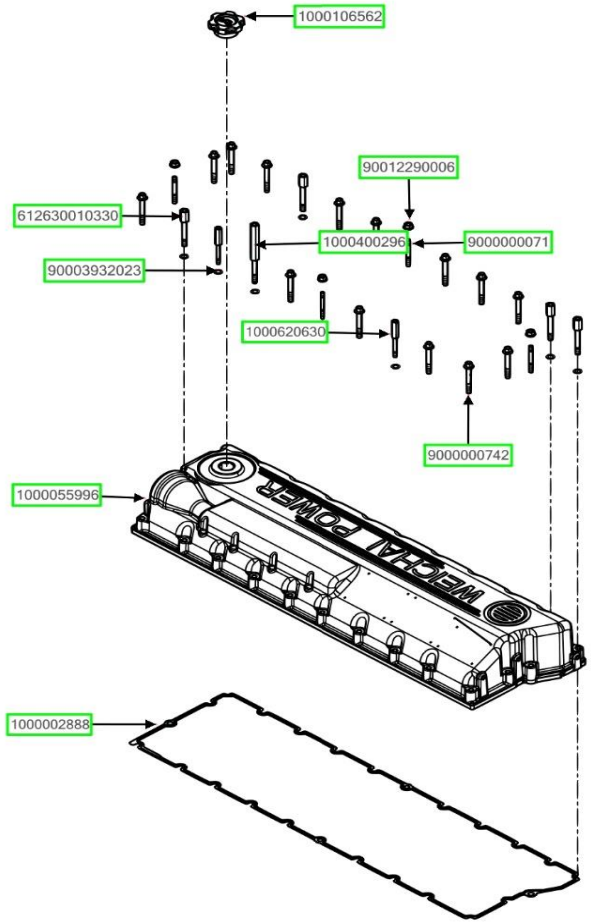


| ASSB_NAME | PART NO. | NAME | QTY |
|---|---|---|---|
| CYLINDER HEAD COVER GROUP | 1000106562 | OIL FILLING PORT COVER ASSEMBLY | 1 |
| | 90012290006 | HEXAGON FLANGE NUT | 4 |
| | 9000000071 | DOUBLE END STUD | 4 |
| | 9000000742 | HEXAGON FLANGE BOLT | 14 |
| | 1000055996 | CYLINDER HEAD COVER ASSEMBLY | 1 |
| | 1000002888 | CYLINDER HEAD COVER GASKET | 1 |
| | 1000620630 | BACK-UP BLOCK | 2 |

| ASSB_NAME | PART NO. | NAME | QTY |
|---|---|---|---|
| CYLINDER HEAD COVER GROUP | 1000400296 | BACK-UP BLOCK | 1 |
| | 90003932023 | WAVE SPRING WASHER | 7 |
| | 612630010330 | BACK-UP BLOCK | 4 |
| | | | |
| | | | |
| | | | |
| | | | |

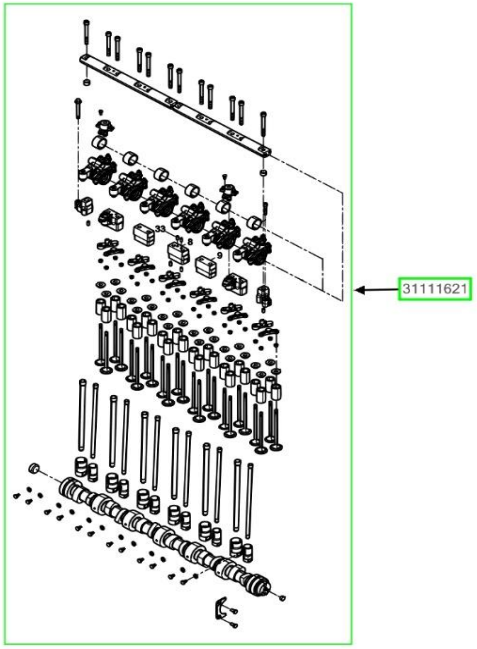


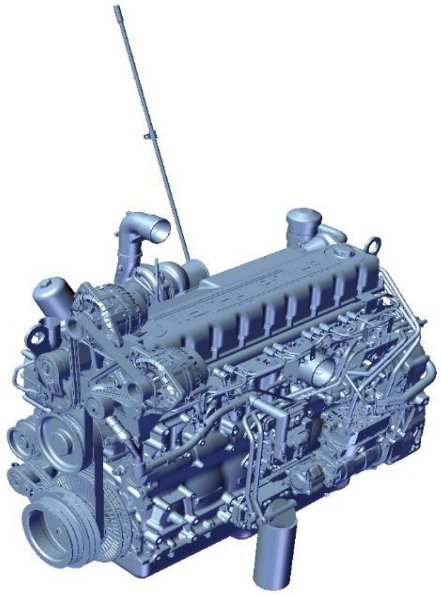

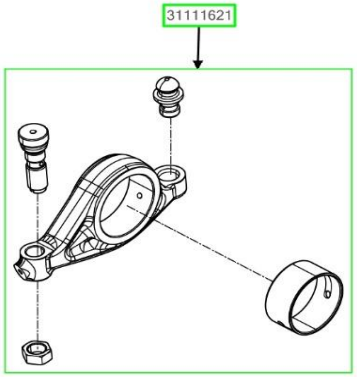


| ASSB_NAME | PART NO. | NAME | QTY |
|---|---|---|---|
| VALVE SYSTEM | 31111621 | VALVE TRAIN GROUP | 1 |
| | 31111622 | INTAKE ROCKER ARM SET | 1 |
| | | | |
| | | | |
| | | | |
| | | | |
| | | | |

| ASSB_NAME | PART NO. | NAME | QTY |
|---|---|---|---|
| VALVE SYSTEM | | | |
| | | | |
| | | | |
| | | | |
| | | | |
| | | | |
| | | | |

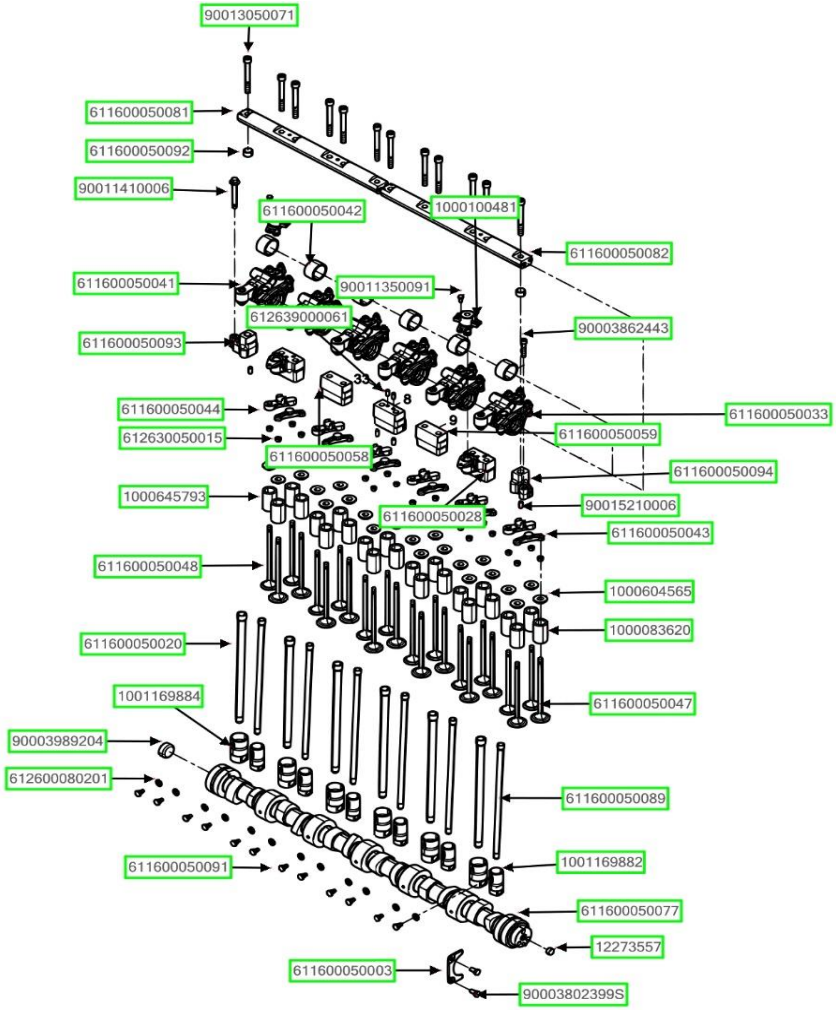


| ASSB_NAME | PART NO. | NAME | QTY |
|---|---|---|---|
| VALVE TRAIN GROUP | 90013050071 | INNER HEXAGON SOCKET HEAD CAP SCREW | 12 |
| | 611600050082 | ROCKER ARM SHAFT SET | 1 |
| | 90011350091 | HEXAGON HEAD BOLT | 2 |
| | 1000100481 | ELECTROMAGNETIC VALVE ASSEMBLY | 2 |
| | 90003862443 | INNER HEXAGON SOCKET HEAD CAP SCREW | 1 |
| | 611600050042 | THRUST RING | 6 |
| | 611600050033 | INTAKE ROCKER ARM SET | 6 |

| ASSB_NAME | PART NO. | NAME | QTY |
|---|---|---|---|
| VALVE TRAIN GROUP | 611600050058 | MIDDLE ROCKER ARM SHAFT SEAT | 1 |
| | 611600050059 | ROCKER ARM SHAFT SEAT | 2 |
| | 611600050028 | ROCKER ARM SHAFT SEAT ASSY | 2 |
| | 611600050094 | REAR ROCKER ARM SHAFT SEAT | 1 |
| | 90015210006 | PARALLEL PIN | 4 |
| | 611600050044 | EXHAUSE VALVE BRIDGE SET | 6 |
| | 611600050043 | INTAKE VALVE BRIDGE | 6 |

| ASSB_NAME | PART NO. | NAME | QTY |
|---|---|---|---|
| VALVE TRAIN GROUP | 612630050015 | VALVE COLLET | 48 |
| | 1000604565 | VALVE SPRING TOP RETAINER | 24 |
| | 1000083620 | INTAKE VALVE SPRING | 12 |
| | 611600050047 | INTAKE VALVE | 12 |
| | 611600050089 | VALVE PUSH ROD ASSEMBLY | 6 |
| | 1001169882 | INTAKE TAPPET ASSEMBLY | 6 |
| | 611600050077 | CAMSHAFT ASSEMBLY | 1 |
| | 12273557 | SCREW PLUG | 1 |
| | 90003802399S | HEXAGON HEAD BOLT | 2 |
| | 611600050003 | CAMSHAFT THRUST PLATE | 1 |
| | 611600050091 | TAPPET GUIDE SCREW | 12 |
| | 612600080201 | WASHER | 12 |
| | 90003989204 | BOWL PLUG | 1 |
| | 1001169884 | EXHAUST TAPPET ASSEMBLY | 6 |
| | 611600050020 | PUSH ROD | 6 |
| | 611600050048 | EXHAUST VALVE | 12 |
| | 1000645793 | EXHAUST VALVE SPRING | 12 |
| | 611600050093 | FRONT ROCKER ARM SHALT SEAT | 1 |
| | 612639000061 | PARALLEL PIN | 2 |
| | 611600050041 | BRAKE ROCKER ARM ASSEMBLY | 6 |
| | 90011410006 | HEXAGON FLANGE BOLT | 1 |
| | 611600050092 | DOWEL PIN | 2 |
| | 611600050081 | ROCKER ARM SHAFT SET | 1 |

| ASSB_NAME | PART NO. | NAME | QTY |
|---|---|---|---|
| VALVE TRAIN GROUP | | | |

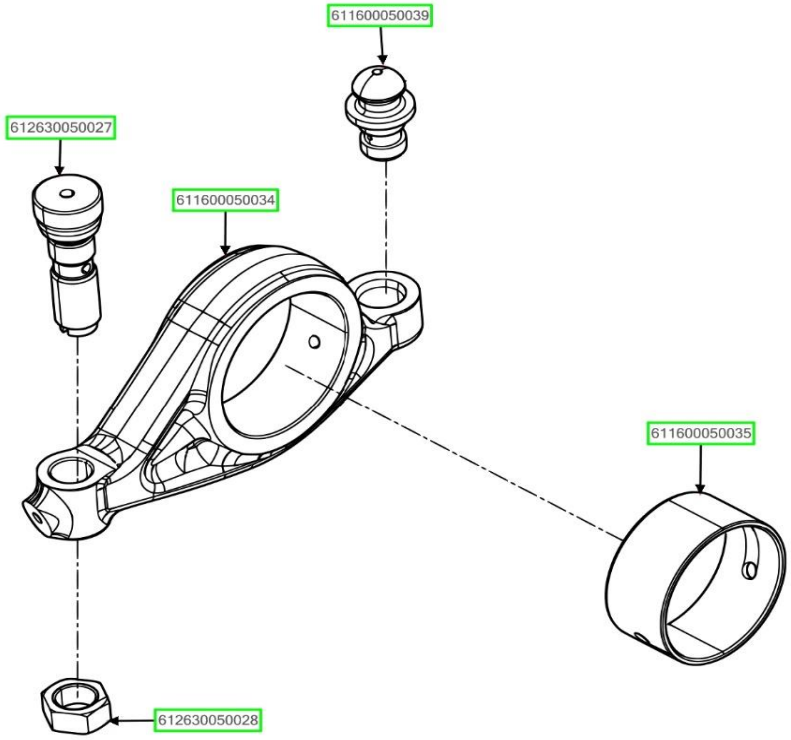


| ASSB_NAME | PART NO. | NAME | QTY |
|---|---|---|---|
| INTAKE ROCKER ARM SET | 612630050027 | ADJUSTING SCREW | 6 |
| | 611600050039 | BALL PIN | 6 |
| | 611600050034 | INTAKE ROCKER ARM | 6 |
| | 611600050035 | ROCKER ARM BUSH | 6 |
| | 612630050028 | HEXAGON LOCK NUT | 6 |
| | | | |
| | | | |

| ASSB_NAME | PART NO. | NAME | QTY |
|---|---|---|---|
| INTAKE ROCKER ARM SET | | | |
| | | | |
| | | | |
| | | | |
| | | | |
| | | | |
| | | | |

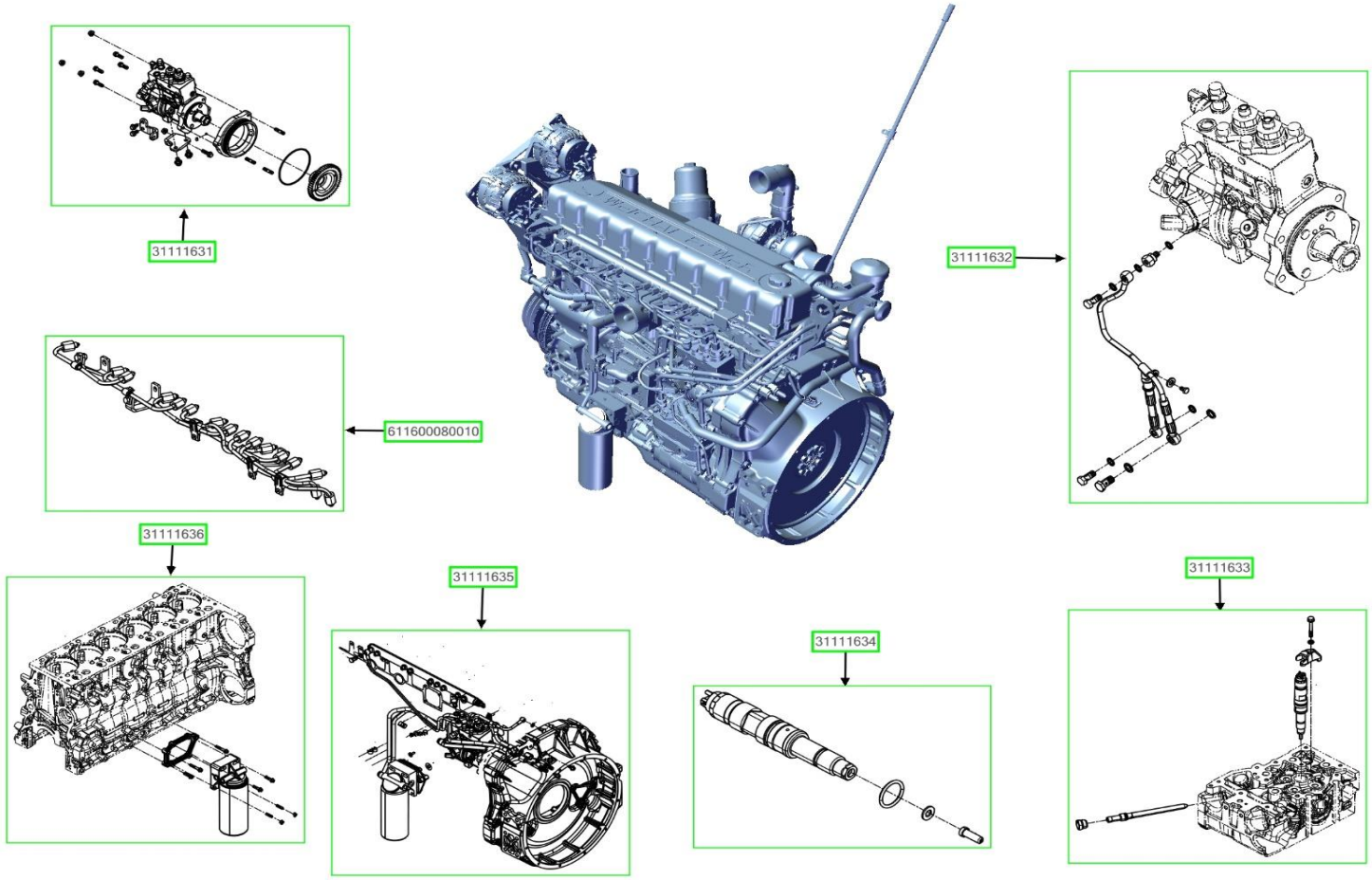


| ASSB_NAME | PART NO. | NAME | QTY |
|---|---|---|---|
| FUEL SYSTEM | 31111631 | FUEL INJECTION PUMP GROUP | 1 |
| | 31111632 | FUEL INJECTION PUMP OIL PIPE GROUP | 1 |
| | 31111633 | FUEL INJECTOR GROUP | 1 |
| | 31111634 | FUEL INJECTOR | 1 |
| | 31111635 | LOW PRESSURE FUEL PIPE GROUP | 1 |
| | 31111636 | FUEL FILTER GROUP | 1 |
| | 611600080010 | HIGH PRESSURE FUEL PIPE GROUP | 1 |

| ASSB_NAME | PART NO. | NAME | QTY |
|---|---|---|---|
| FUEL SYSTEM | | | |
| | | | |
| | | | |
| | | | |
| | | | |
| | | | |
| | | | |

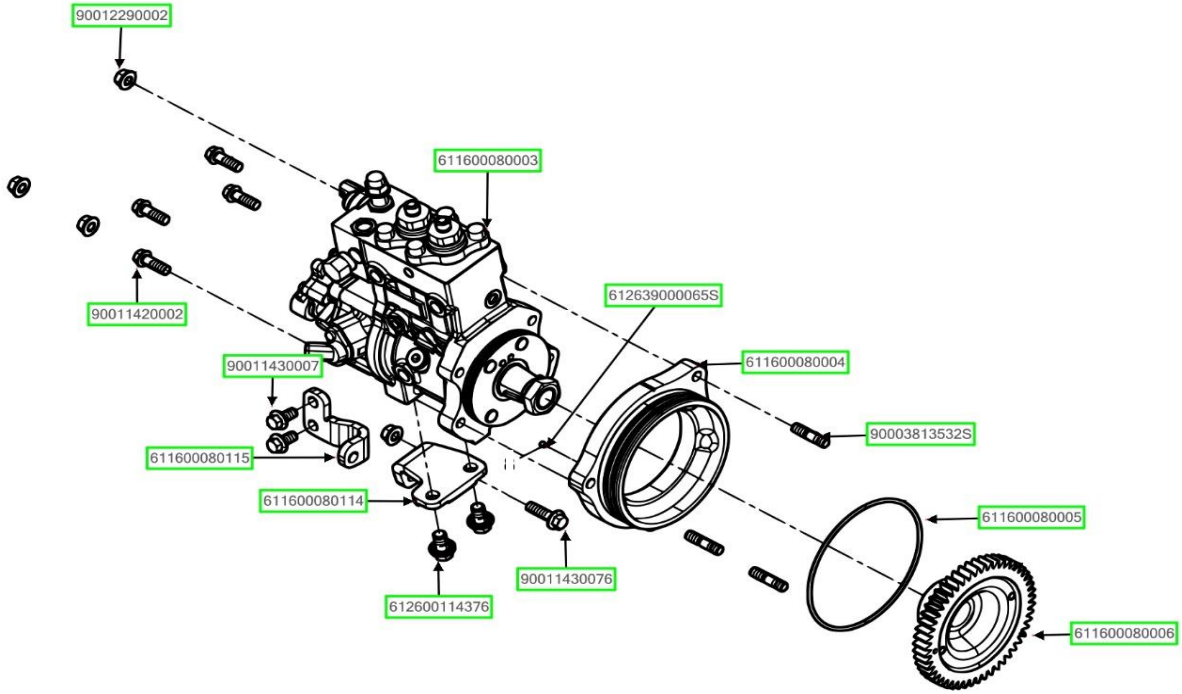


| ASSB_NAME | PART NO. | NAME | QTY |
|---|---|---|---|
| FUEL INJECTION PUMP GROUP | 90012290002 | HEXAGON FLANGE NUT | 4 |
| | 90011420002 | HEXAGON FLANGE BOLT | 4 |
| | 611600080003 | FUEL INJECTION PUMP ASSEMBLY | 1 |
| | 611600080004 | FUEL INJECTION PUMP FLANGE | 1 |
| | 90003813532S | DOUBLE END STUD | 3 |
| | 611600080005 | O-RING | 2 |
| | 611600080006 | FUEL INJECTION PUMP GEAR | 1 |

| ASSB_NAME | PART NO. | NAME | QTY |
|---|---|---|---|
| FUEL INJECTION PUMP GROUP | 612639000065S | SCREW | 1 |
| | 90011430076 | HEXAGON FLANGE WITH TOOTH BOLT | 1 |
| | 612600114376 | HEXAGON FLANGE WITH TOOTH BOLT | 2 |
| | 611600080114 | FUEL INJECTION PUMP BRACKET | 1 |
| | 611600080115 | FUEL INJECTION PUMP BRACKET | 1 |
| | 90011430007 | HEXAGON FLANGE WITH TOOTH BOLT | 2 |
| | | | |

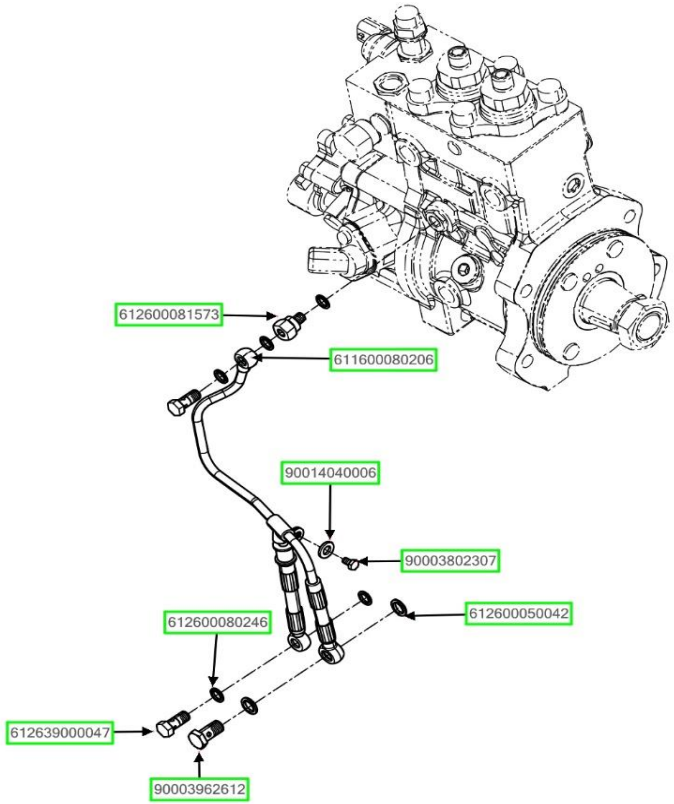


| ASSB_NAME | PART NO. | NAME | QTY |
|---|---|---|---|
| FUEL INJECTION PUMP OIL PIPE GROUP | 612600081573 | CONVERSION ADAPTER | 1 |
| | 611600080206 | FUEL INJECTION PUMP OIL PIPE ASSEM | 1 |
| | 90014040006 | PLAIN WASHER | 1 |
| | 90003802307 | HEXAGON HEAD BOLT | 1 |
| | 612600080246 | WASHER | 5 |
| | 612600050042 | SEALING WASHER | 2 |
| | 90003962612 | HOLLOW SCREW | 1 |

| ASSB_NAME | PART NO. | NAME | QTY |
|---|---|---|---|
| FUEL INJECTION PUMP OIL PIPE GROUP | 612639000047 | BOLT | 2 |
| | | | |
| | | | |
| | | | |
| | | | |
| | | | |
| | | | |

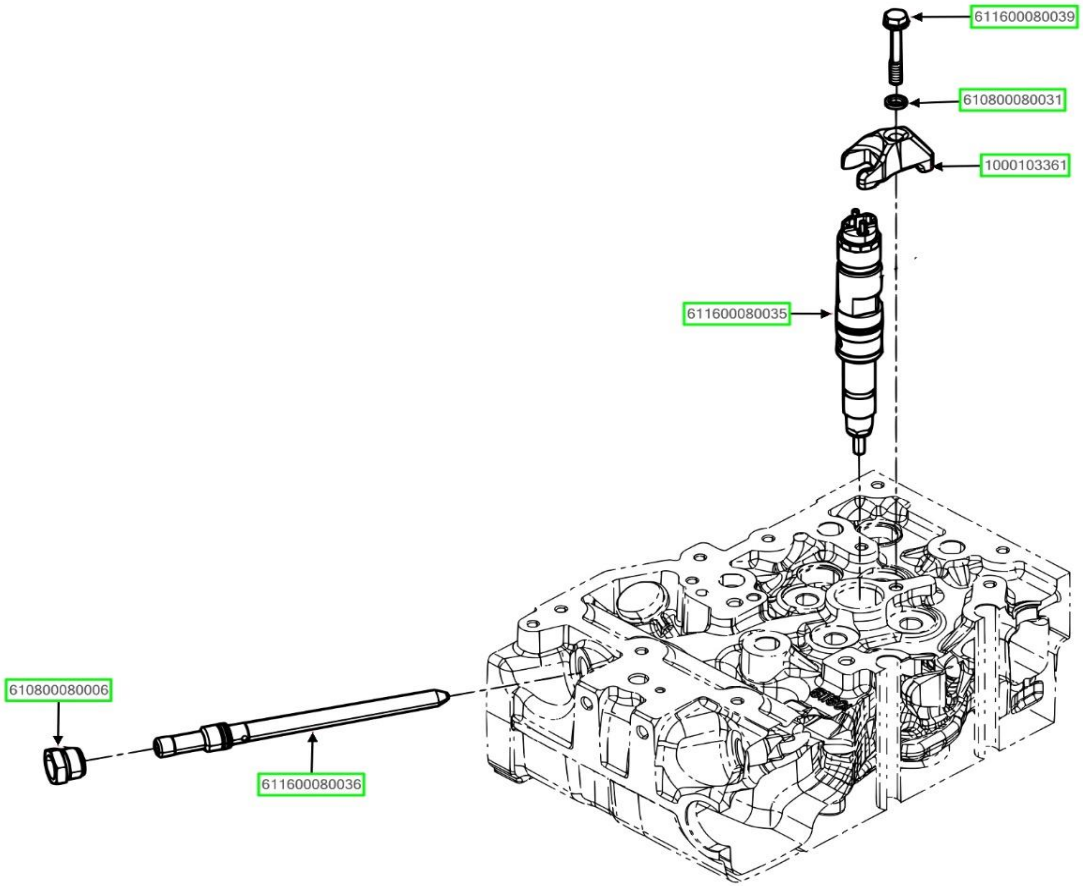


| ASSB_NAME | PART NO. | NAME | QTY |
|---|---|---|---|
| FUEL INJECTOR GROUP | 611600080039 | HEXAGON HEAD BOLT | 6 |
| | 610800080031 | WASHER WITH BALL FACE | 6 |
| | 1000103361 | FUEL INJECTOR CLAMP | 6 |
| | 611600080035 | FUEL INJECTOR | 6 |
| | 610800080006 | TIGHT NUT | 6 |
| | 611600080036 | HIGH-PRESSURE CONNECTOR | 6 |
| | | | |

| ASSB_NAME | PART NO. | NAME | QTY |
|---|---|---|---|
| FUEL INJECTOR GROUP | | | |
| | | | |
| | | | |
| | | | |
| | | | |
| | | | |
| | | | |

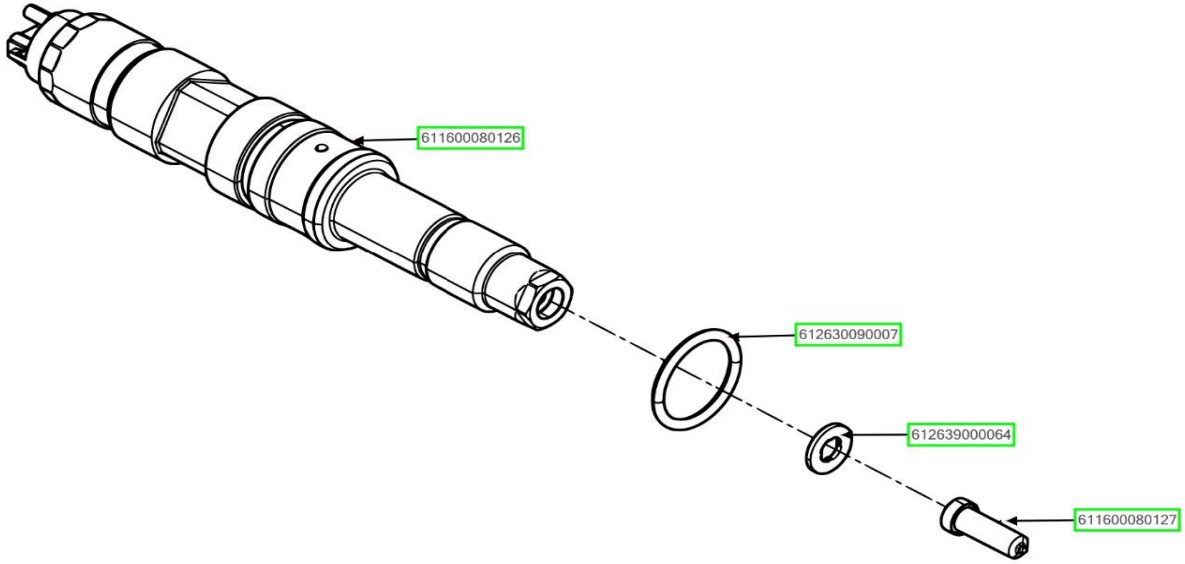


| ASSB_NAME | PART NO. | NAME | QTY |
|---|---|---|---|
| FUEL INJECTOR | 611600080126 | NOZZLE HOLDER | 1 |
| | 612630090007 | O-RING | 1 |
| | 612639000064 | SEALING WASHER | 1 |
| | 611600080127 | NOZZLE | 1 |
| | | | |
| | | | |
| | | | |

| ASSB_NAME | PART NO. | NAME | QTY |
|---|---|---|---|
| FUEL INJECTOR | | | |
| | | | |
| | | | |
| | | | |
| | | | |
| | | | |
| | | | |

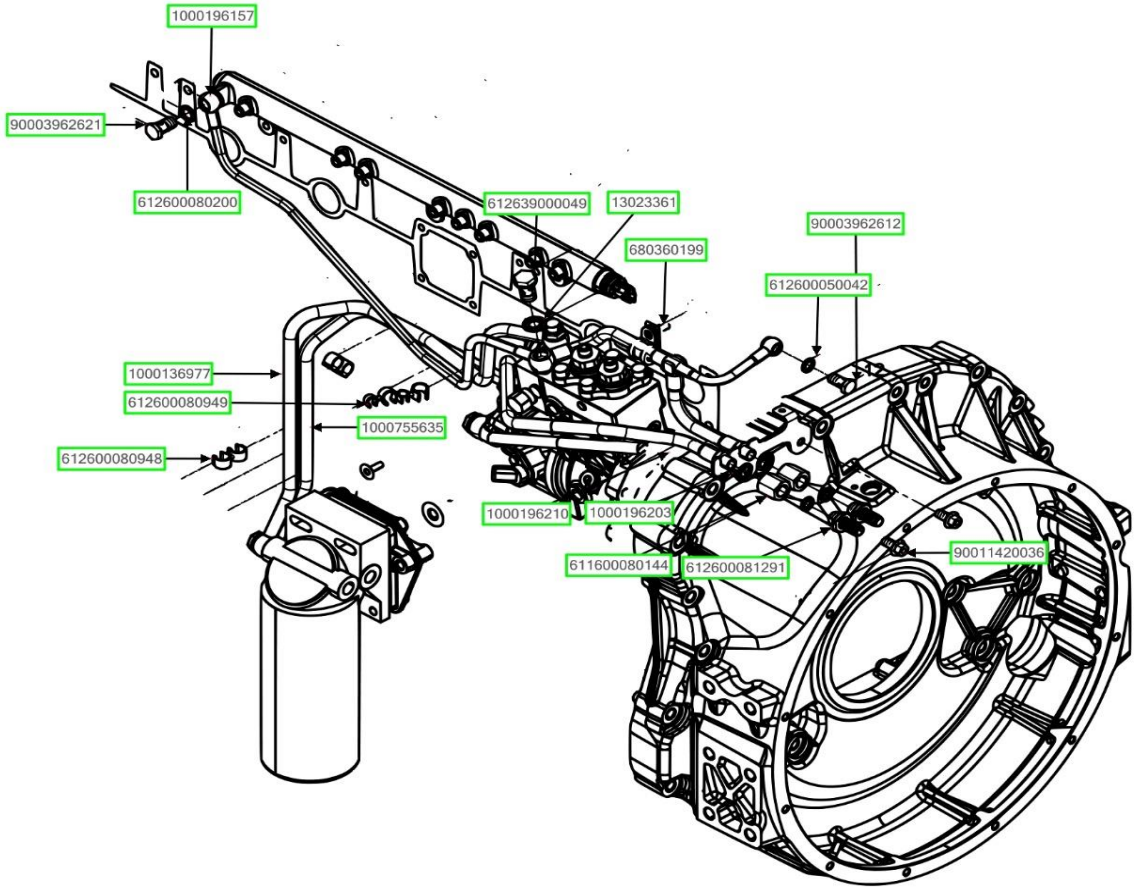


| ASSB_NAME | PART NO. | NAME | QTY |
|---|---|---|---|
| LOW PRESSURE FUEL PIPE GROUP | 1000196157 | FUEL RETURN PIPE ASSEMBLY | 1 |
| | 612600080200 | WASHER | 6 |
| | 90003962621 | HOLLOW SCREW | 1 |
| | 612600080948 | PIPE CLAMP ASSEMBLY | 2 |
| | 1000136977 | FUEL-INLET PIPE ASSEMBLY | 1 |
| | 1000755635 | FUEL-INLET PIPE ASSEMBLY | 1 |
| | 612600080949 | CLIP | 2 |

| ASSB_NAME | PART NO. | NAME | QTY |
|---|---|---|---|
| LOW PRESSURE FUEL PIPE GROUP | 612639000049 | BOLT | 6 |
| | 13023361 | ASSEMBLED SEALING WASHER | 14 |
| | 680360199 | PIPE CLAMP ASSEMBLY | 1 |
| | 612600050042 | SEALING WASHER | 2 |
| | 90003962612 | HOLLOW SCREW | 1 |
| | 90011420036 | HEXAGON FLANGE BOLT | 2 |
| | 612600081291 | PIPE JOINT | 2 |

| ASSB_NAME | PART NO. | NAME | QTY |
|---|---|---|---|
| LOW PRESSURE FUEL PIPE GROUP | 611600080144 | NUT | 2 |
| | 1000196203 | PIPE CLAMP ASSEMBLY | 1 |
| | 1000196210 | FUEL-INLET PIPE ASSEMBLY | 1 |

| ASSB_NAME | PART NO. | NAME | QTY |
|---|---|---|---|

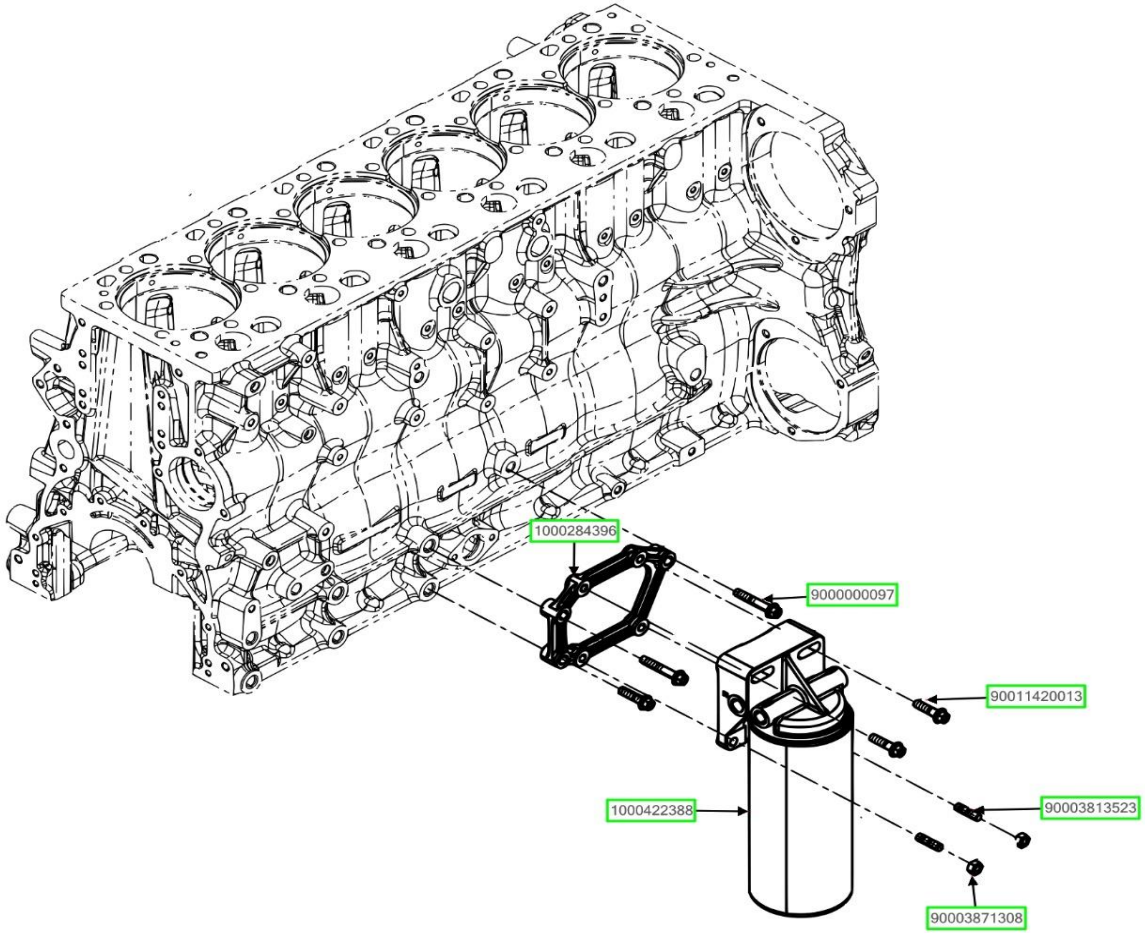


| ASSB_NAME | PART NO. | NAME | QTY |
|---|---|---|---|
| FUEL FILTER GROUP | 1000284396 | FUEL FILTER BRACKET | 1 |
| | 9000000097 | HEXAGON FLANGE BOLT | 2 |
| | 1000422388 | FUEL FINE FILTER | 1 |
| | 90011420013 | HEXAGON FLANGE BOLT | 3 |
| | 90003813523 | DOUBLE END STUD | 2 |
| | 90003871308 | HEXAGON NUTS, STYLE 1 | 2 |
| | | | |

| ASSB_NAME | PART NO. | NAME | QTY |
|---|---|---|---|
| FUEL FILTER GROUP | | | |
| | | | |
| | | | |
| | | | |
| | | | |
| | | | |
| | | | |

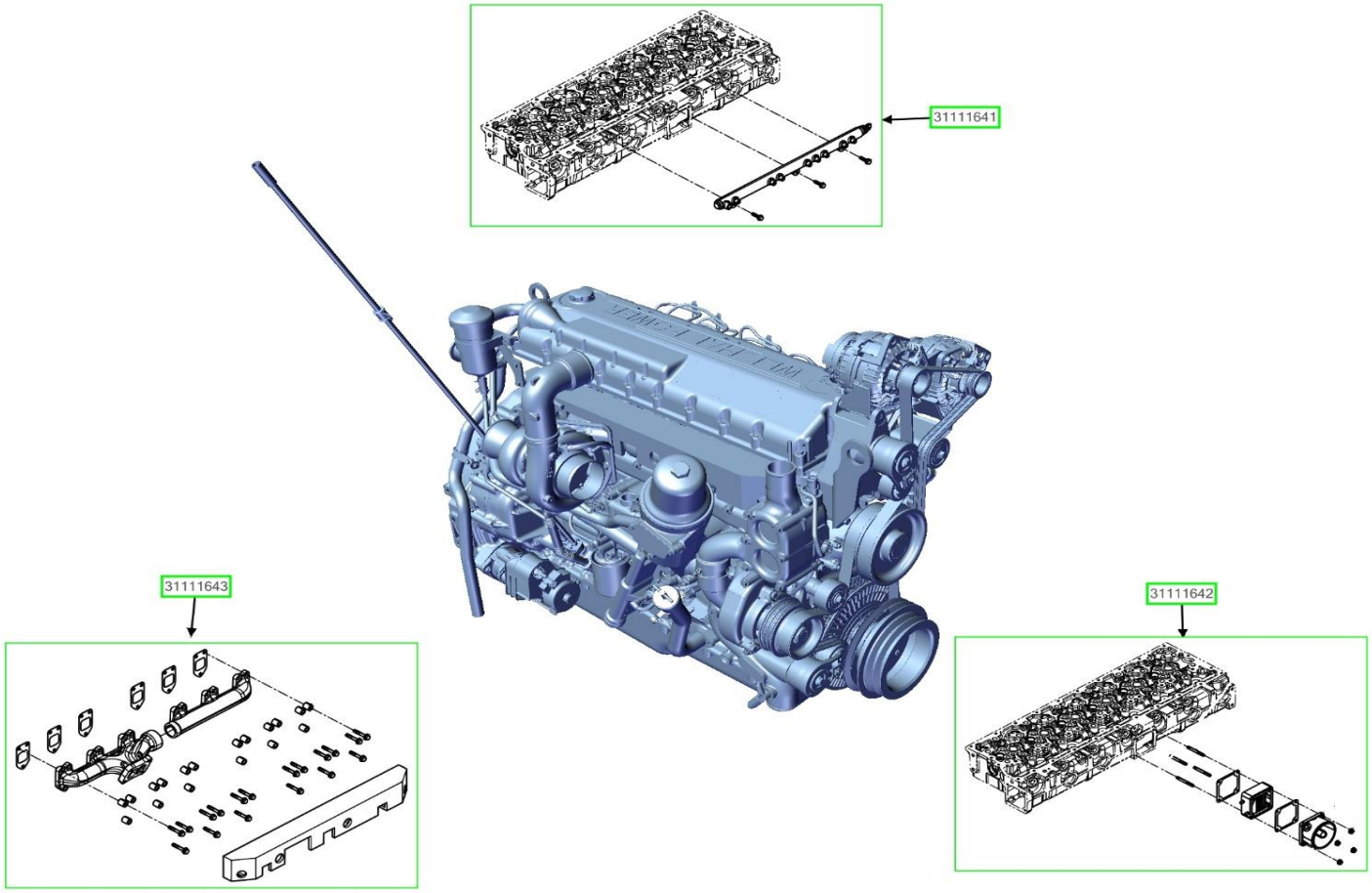


| ASSB_NAME | PART NO. | NAME | QTY |
|---|---|---|---|
| INTAKE AND EXHAUST | 31111641 | COMMON RAIL GROUP | 1 |
| | 31111642 | INTAKE MANIFOLD GROUPS | 1 |
| | 31111643 | EXHAUST MANIFOLD GROUP | 3 |
| | | | |
| | | | |
| | | | |
| | | | |

| ASSB_NAME | PART NO. | NAME | QTY |
|---|---|---|---|
| INTAKE AND EXHAUST | | | |
| | | | |
| | | | |
| | | | |
| | | | |
| | | | |
| | | | |

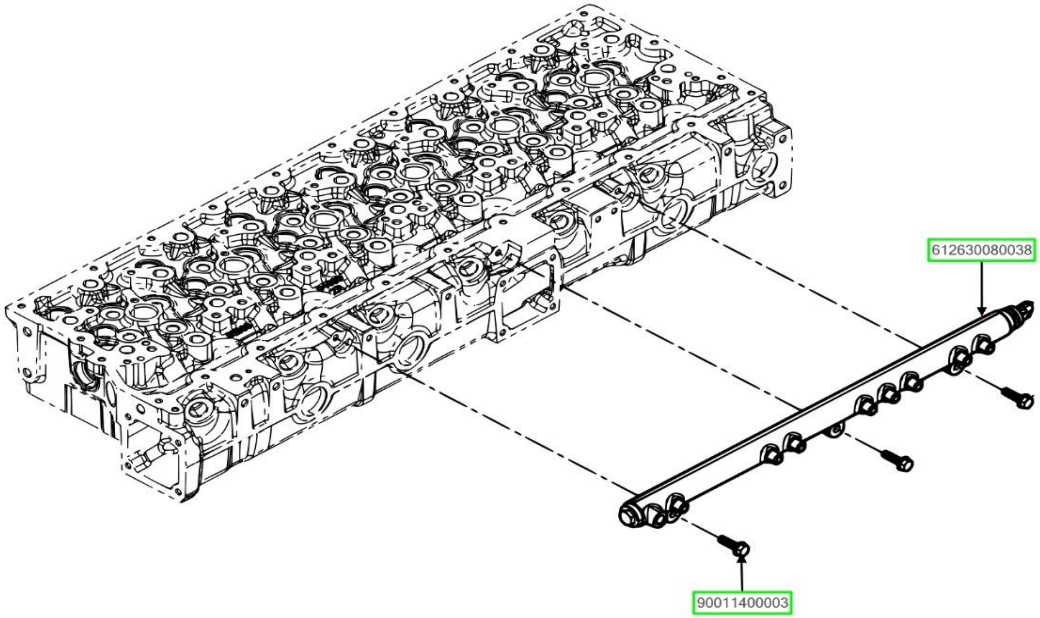


| ASSB_NAME | PART NO. | NAME | QTY |
|---|---|---|---|
| COMMON RAIL GROUP | 612630080038 | RAIL | 1 |
| | 90011400003 | HEXAGON FLANGE BOLT | 3 |
| | | | |
| | | | |
| | | | |
| | | | |
| | | | |

| ASSB_NAME | PART NO. | NAME | QTY |
|---|---|---|---|
| COMMON RAIL GROUP | | | |
| | | | |
| | | | |
| | | | |
| | | | |
| | | | |
| | | | |

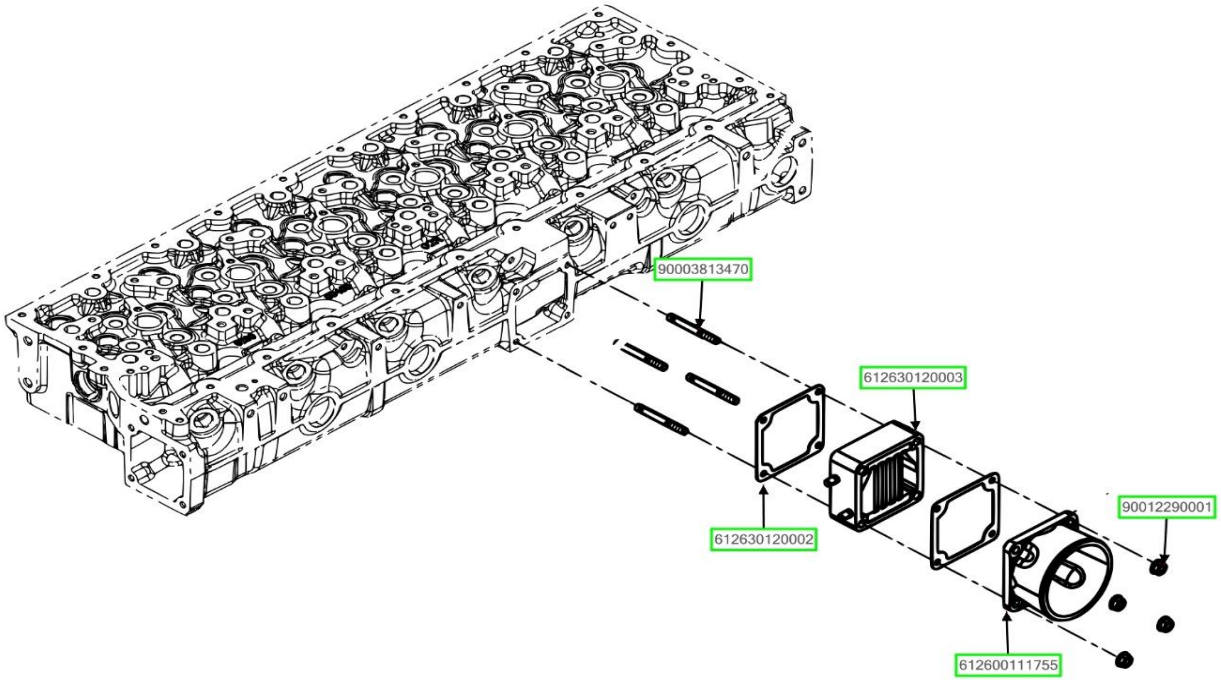


| ASSB_NAME | PART NO. | NAME | QTY |
|---|---|---|---|
| INTAKE MANIFOLD GROUPS | 90003813470 | DOUBLE END STUD | 4 |
| | 612630120002 | GASKET | 2 |
| | 612630120003 | HEATER | 1 |
| | 612600111755 | INTAKE CONNECTING PIPE | 1 |
| | 90012290001 | HEXAGON FLANGE NUT | 4 |
| | | | |
| | | | |

| ASSB_NAME | PART NO. | NAME | QTY |
|---|---|---|---|
| INTAKE MANIFOLD GROUPS | | | |
| | | | |
| | | | |
| | | | |
| | | | |
| | | | |
| | | | |

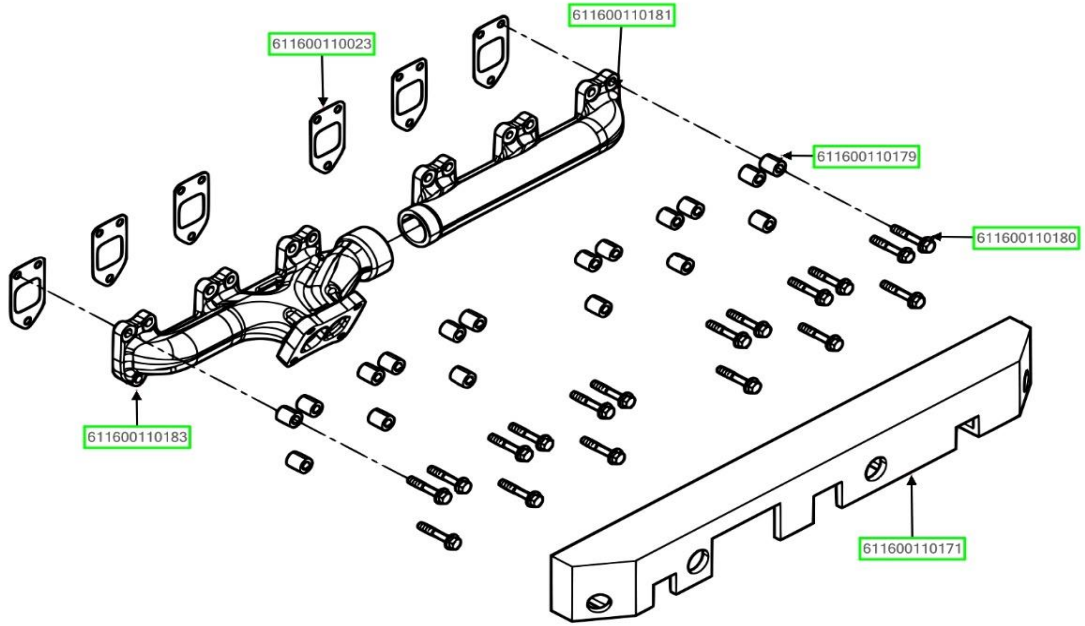


| ASSB_NAME | PART NO. | NAME | QTY |
|---|---|---|---|
| EXHAUST MANIFOLD GROUP | 611600110023 | EXHASUT MANIFOLD GASKET | 6 |
| | 611600110181 | EXHAUST MANIFOLD | 1 |
| | 611600110179 | SLEEVE | 18 |
| | 611600110180 | EXHAUST MANIFOLD BOLT | 18 |
| | 611600110171 | EXHAUST MANIFOLD HEAT INSULATION | 1 |
| | 611600110183 | EXHAUST MANIFOLD | 1 |
| | | | |

| ASSB_NAME | PART NO. | NAME | QTY |
|---|---|---|---|
| EXHAUST MANIFOLD GROUP | | | |
| | | | |
| | | | |
| | | | |
| | | | |
| | | | |
| | | | |

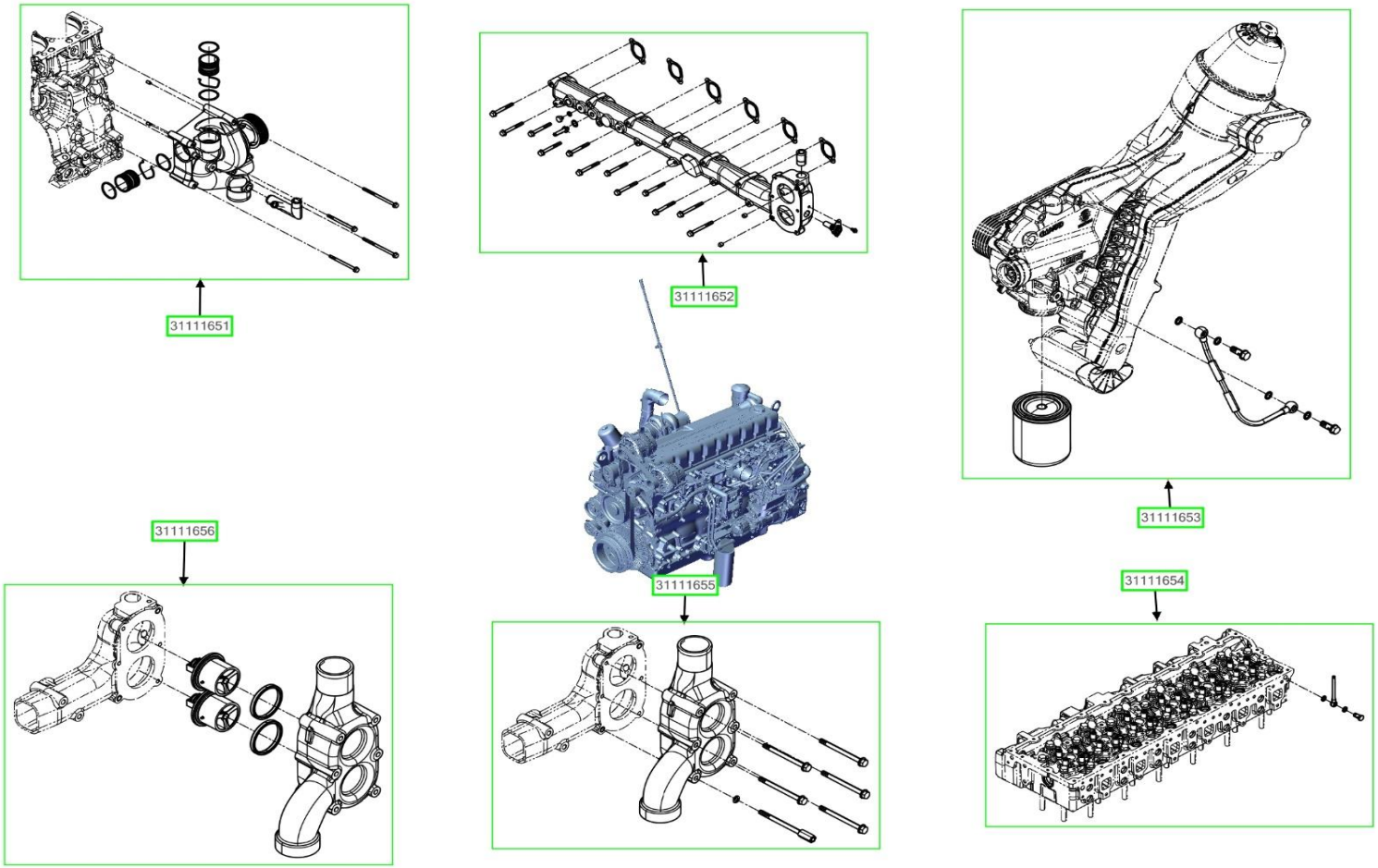


| ASSB_NAME | PART NO. | NAME | QTY |
|---|---|---|---|
| COOLING SYSTEM | 31111651 | WATER PUMP GROUP | 1 |
| | 31111652 | WATER OUTLET PIPE GROUP | 1 |
| | 31111653 | COOLANT FILTER GROUP | 1 |
| | 31111654 | VENTING PIPE GROUP | 1 |
| | 31111655 | THERMOSTAT GROUP | 1 |
| | 31111656 | THERMOSTAT ASSEMBLY | 1 |
| | | | |

| ASSB_NAME | PART NO. | NAME | QTY |
|---|---|---|---|
| COOLING SYSTEM | | | |
| | | | |
| | | | |
| | | | |
| | | | |
| | | | |
| | | | |

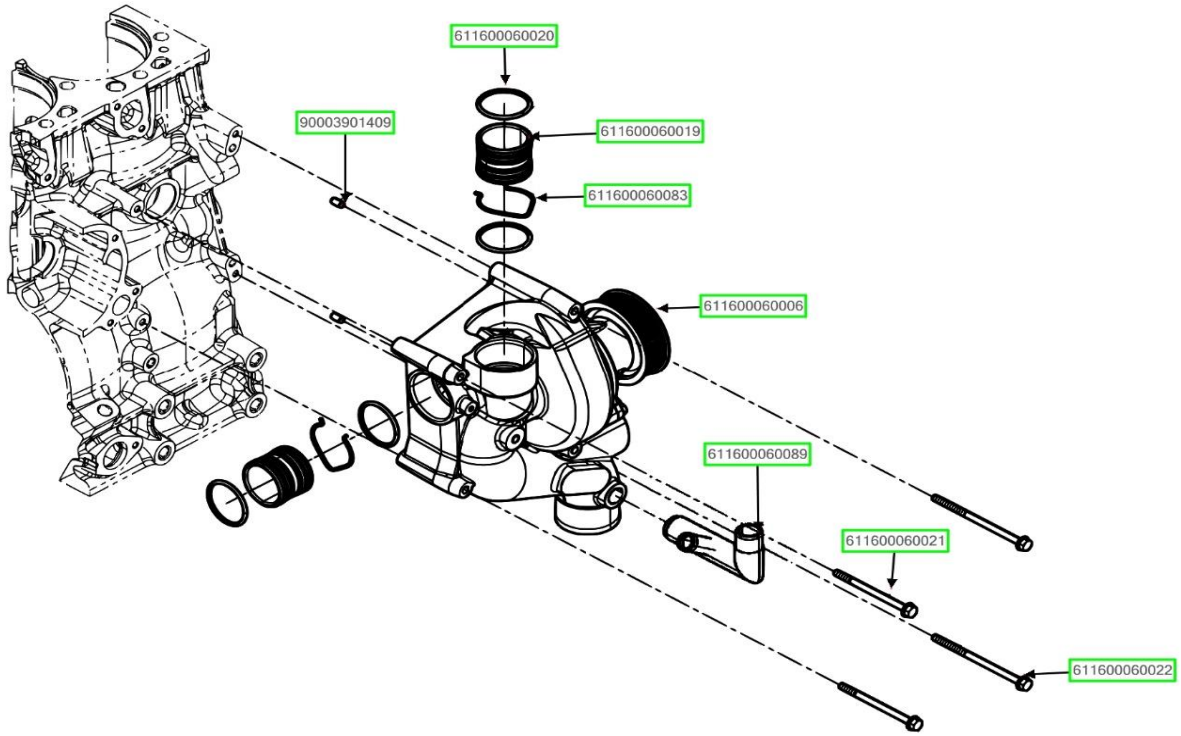


| ASSB_NAME | PART NO. | NAME | QTY |
|---|---|---|---|
| WATER PUMP GROUP | 90003901409 | PARALLEL PIN | 2 |
| | 611600060020 | O-RING | 4 |
| | 611600060019 | WATER PIPE CONNECTOR | 2 |
| | 611600060083 | ROUND WIRE SNAP RINGS FOR SHAFT | 2 |
| | 611600060006 | WATER PUMP ASSEMBLY | 1 |
| | 611600060021 | HEXAGON FLANGE BOLT | 2 |
| | 611600060022 | HEXAGON FLANGE BOLT | 2 |

| ASSB_NAME | PART NO. | NAME | QTY |
|---|---|---|---|
| WATER PUMP GROUP | 611600060089 | WATER PIPE CONNECTOR | 1 |
| | | | |
| | | | |
| | | | |
| | | | |
| | | | |
| | | | |

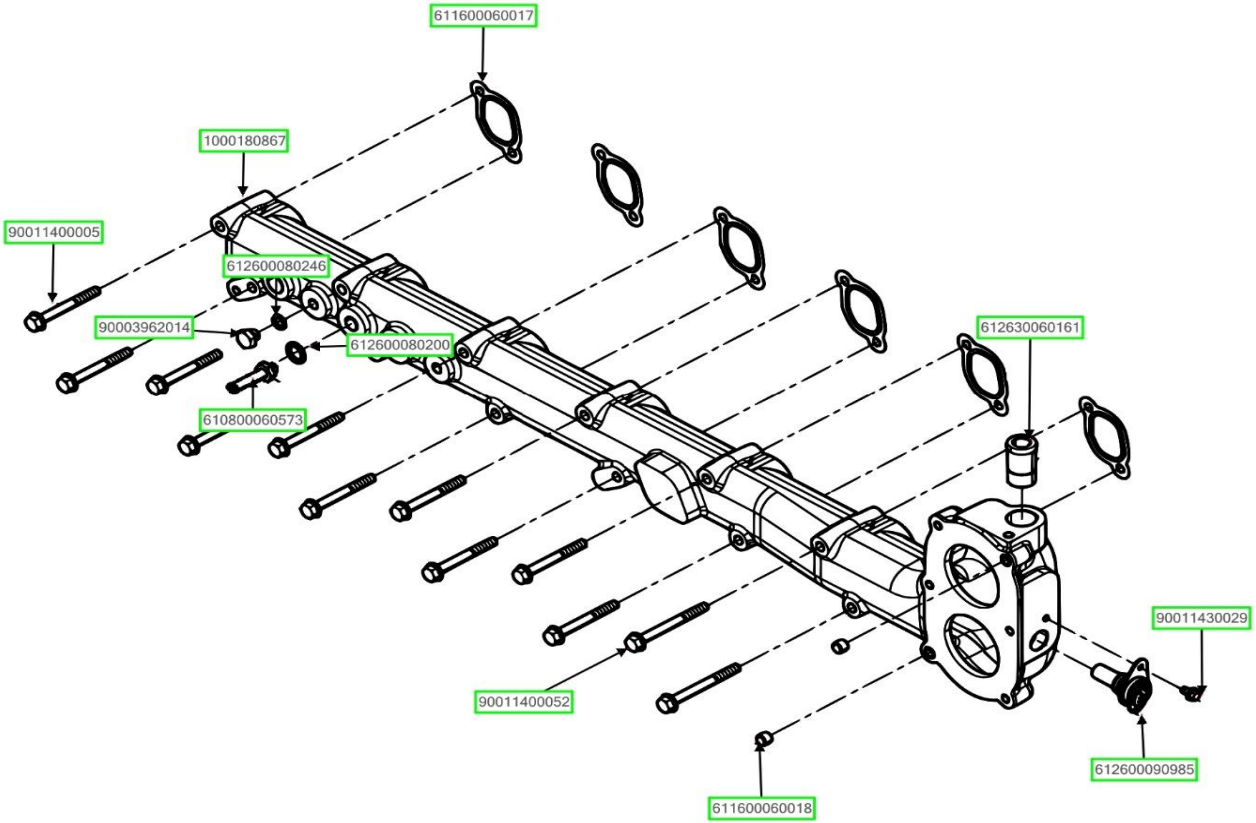


| ASSB_NAME | PART NO. | NAME | QTY |
|---|---|---|---|
| WATER OUTLET PIPE GROUP | 611600060017 | WATER-OUTLET PIPE GASKET | 6 |
| | 1000180867 | WATER-OUTLET PIPE | 1 |
| | 90011400005 | HEXAGON FLANGE BOLT | 10 |
| | 612600080246 | WASHER | 1 |
| | 90003962014 | HEXAGON PLUG | 1 |
| | 612600080200 | WASHER | 1 |
| | 610800060573 | PIPE JOINT | 1 |

| ASSB_NAME | PART NO. | NAME | QTY |
|---|---|---|---|
| WATER OUTLET PIPE GROUP | 90011400052 | HEXAGON FLANGE BOLT, HEAVY SERIES | 2 |
| | 611600060018 | DOWEL PIN | 2 |
| | 612600090985 | TEMPERATURE SENSOR | 1 |
| | 90011430029 | HEXAGON FLANGE WITH TOOTH BOLT | 1 |
| | 612630060161 | CONVERSION ADAPTER | 1 |
| | | | |
| | | | |

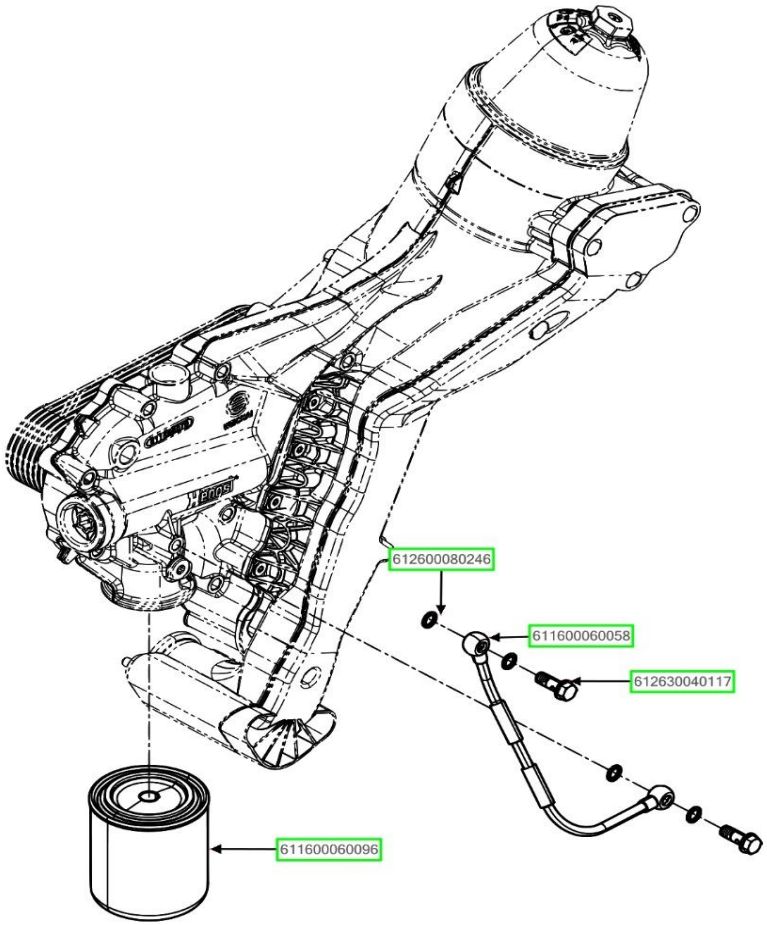


| ASSB_NAME | PART NO. | NAME | QTY |
|---|---|---|---|
| COOLANT FILTER GROUP | 612600080246 | WASHER | 4 |
| | 611600060058 | WATER-OUTLET PIPE SET | 1 |
| | 612630040117 | BOLT | 2 |
| | 611600060096 | COOLANT FILTER | 1 |
| | | | |
| | | | |
| | | | |

| ASSB_NAME | PART NO. | NAME | QTY |
|---|---|---|---|
| COOLANT FILTER GROUP | | | |
| | | | |
| | | | |
| | | | |
| | | | |
| | | | |
| | | | |

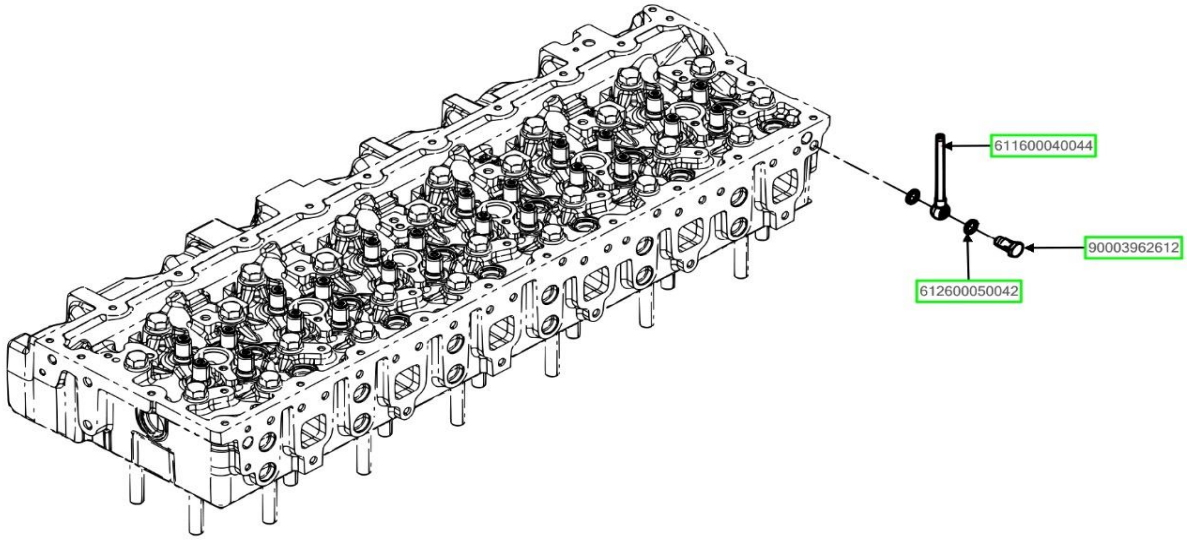


| ASSB_NAME | PART NO. | NAME | QTY |
|---|---|---|---|
| VENTING PIPE GROUP | 611600040044 | VENTING PIPE ASSEMBLY | 1 |
| | 612600050042 | SEALING WASHER | 2 |
| | 90003962612 | HOLLOW SCREW | 1 |
| | | | |
| | | | |
| | | | |
| | | | |

| ASSB_NAME | PART NO. | NAME | QTY |
|---|---|---|---|
| VENTING PIPE GROUP | | | |
| | | | |
| | | | |
| | | | |
| | | | |
| | | | |
| | | | |

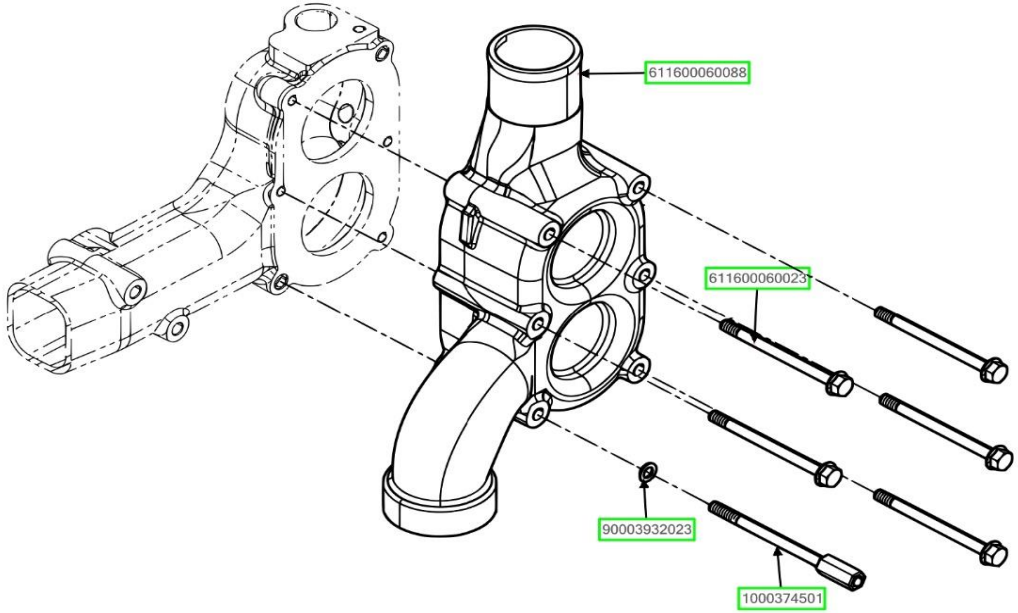


| ASSB_NAME | PART NO. | NAME | QTY |
|---|---|---|---|
| THERMOSTAT GROUP | 611600060088 | THERMOSTAT ASSEMBLY | 1 |
| | 611600060023 | HEXAGON FLANGE BOLT | 5 |
| | 90003932023 | WAVE SPRING WASHER | 1 |
| | 1000374501 | BACK-UP BLOCK | 1 |
| | | | |
| | | | |
| | | | |

| ASSB_NAME | PART NO. | NAME | QTY |
|---|---|---|---|
| THERMOSTAT GROUP | | | |
| | | | |
| | | | |
| | | | |
| | | | |
| | | | |
| | | | |

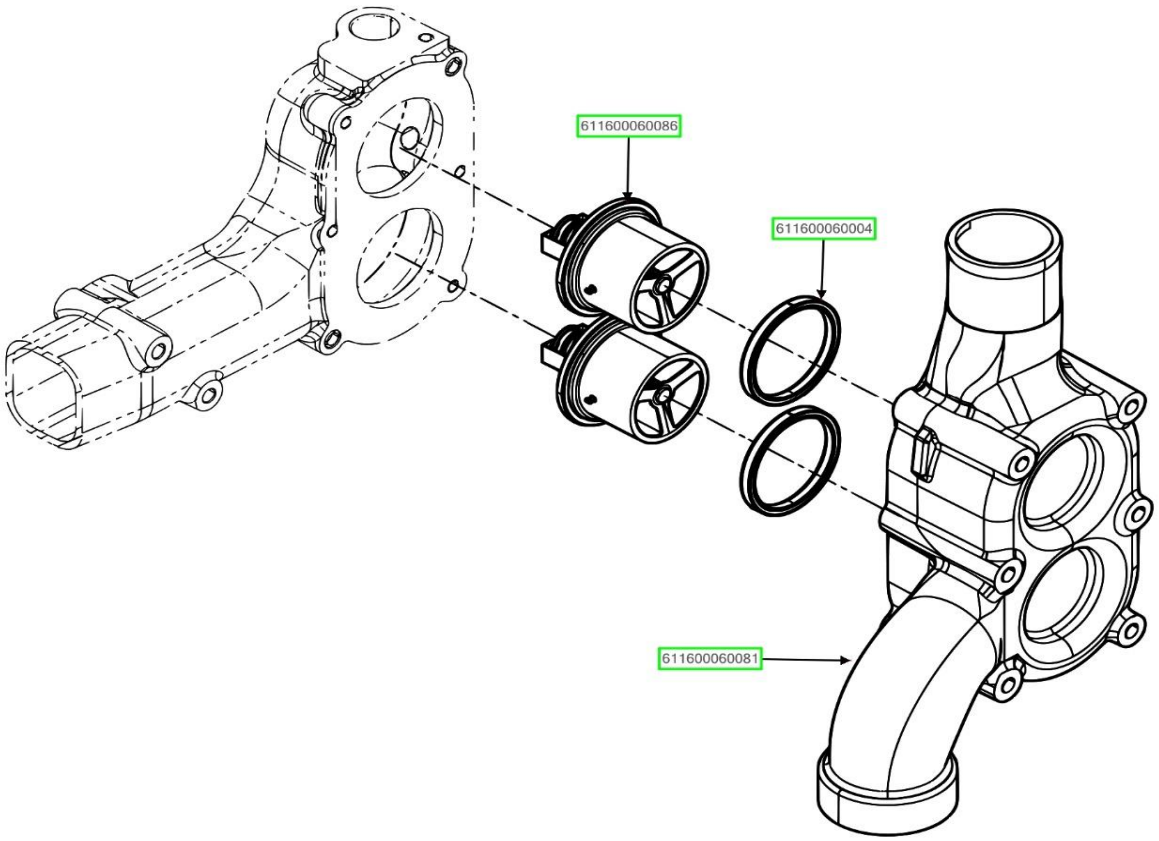


| ASSB_NAME | PART NO. | NAME | QTY |
|---|---|---|---|
| THERMOSTAT ASSEMBLY | 611600060086 | THERMOSTAT | 2 |
| | 611600060004 | WATER SEAL | 2 |
| | 611600060081 | THERMOSTAT COVER | 1 |
| | | | |
| | | | |
| | | | |
| | | | |

| ASSB_NAME | PART NO. | NAME | QTY |
|---|---|---|---|
| THERMOSTAT ASSEMBLY | | | |
| | | | |
| | | | |
| | | | |
| | | | |
| | | | |
| | | | |

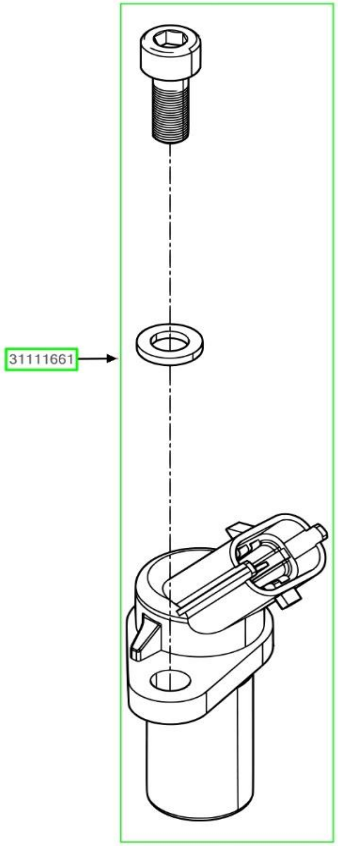


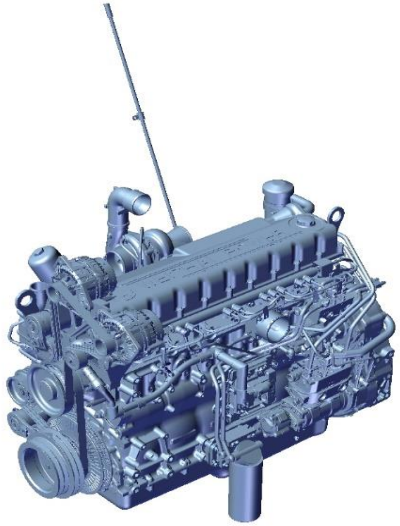

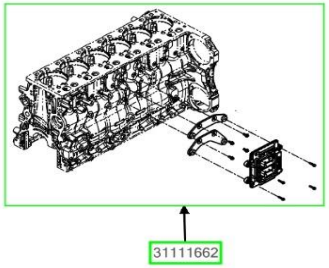


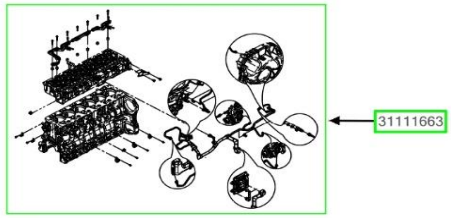


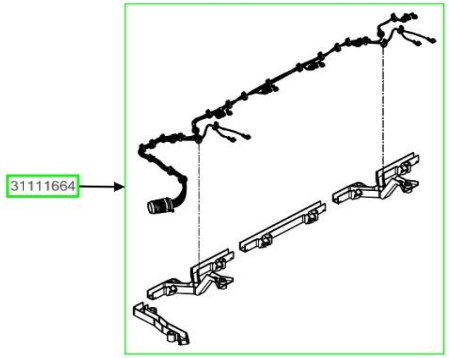


| ASSB_NAME | PART NO. | NAME | QTY |
|---|---|---|---|
| ELECTRICAL AND SENSOR | 31111661 | SPEED SENSOR | 1 |
| | 31111662 | ELECTRONIC CONTROL UNIT GROUP | 1 |
| | 31111663 | ELECTRONIC CONTROL SYSTEM HARNESS GROUP | 1 |
| | 31111664 | FUEL INJECTOR HARNESS | 1 |
| | | | |
| | | | |
| | | | |

| ASSB_NAME | PART NO. | NAME | QTY |
|---|---|---|---|
| ELECTRICAL AND SENSOR | | | |
| | | | |
| | | | |
| | | | |
| | | | |
| | | | |
| | | | |

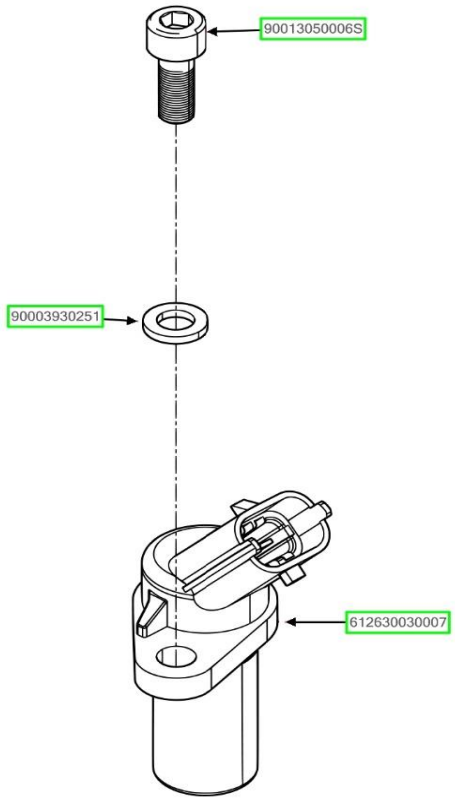


| ASSB_NAME | PART NO. | NAME | QTY |
|---|---|---|---|
| SPEED SENSOR | 90013050006S | INNER HEXAGON SOCKET HEAD CAP S | 1 |
| | 90003930251 | SMALL SERIES, PLAIN WASHER, | 1 |
| | 612630030007 | SPEED SENSOR | 1 |
| | | | |
| | | | |
| | | | |
| | | | |

| ASSB_NAME | PART NO. | NAME | QTY |
|---|---|---|---|
| SPEED SENSOR | | | |
| | | | |
| | | | |
| | | | |
| | | | |
| | | | |
| | | | |

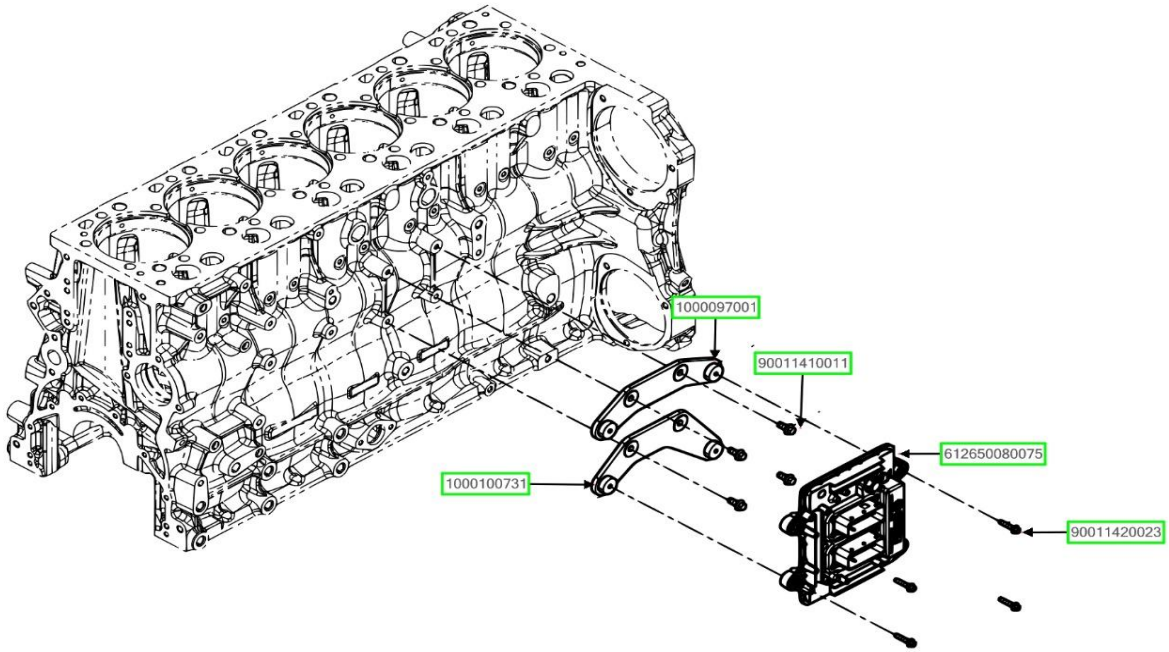


| ASSB_NAME | PART NO. | NAME | QTY |
|---|---|---|---|
| ELECTRONIC CONTROL UNIT GROUP | 1000097001 | ECU BRACKET | 1 |
| | 90011410011 | HEXAGON FLANGE BOLT | 4 |
| | 612650080075 | ELECTRONIC CONTROL UNIT | 1 |
| | 90011420023 | HEXAGON FLANGE BOLT | 4 |
| | 1000100731 | ECU BRACKET | 1 |
| | | | |
| | | | |

| ASSB_NAME | PART NO. | NAME | QTY |
|---|---|---|---|
| ELECTRONIC CONTROL UNIT GROUP | | | |
| | | | |
| | | | |
| | | | |
| | | | |
| | | | |
| | | | |

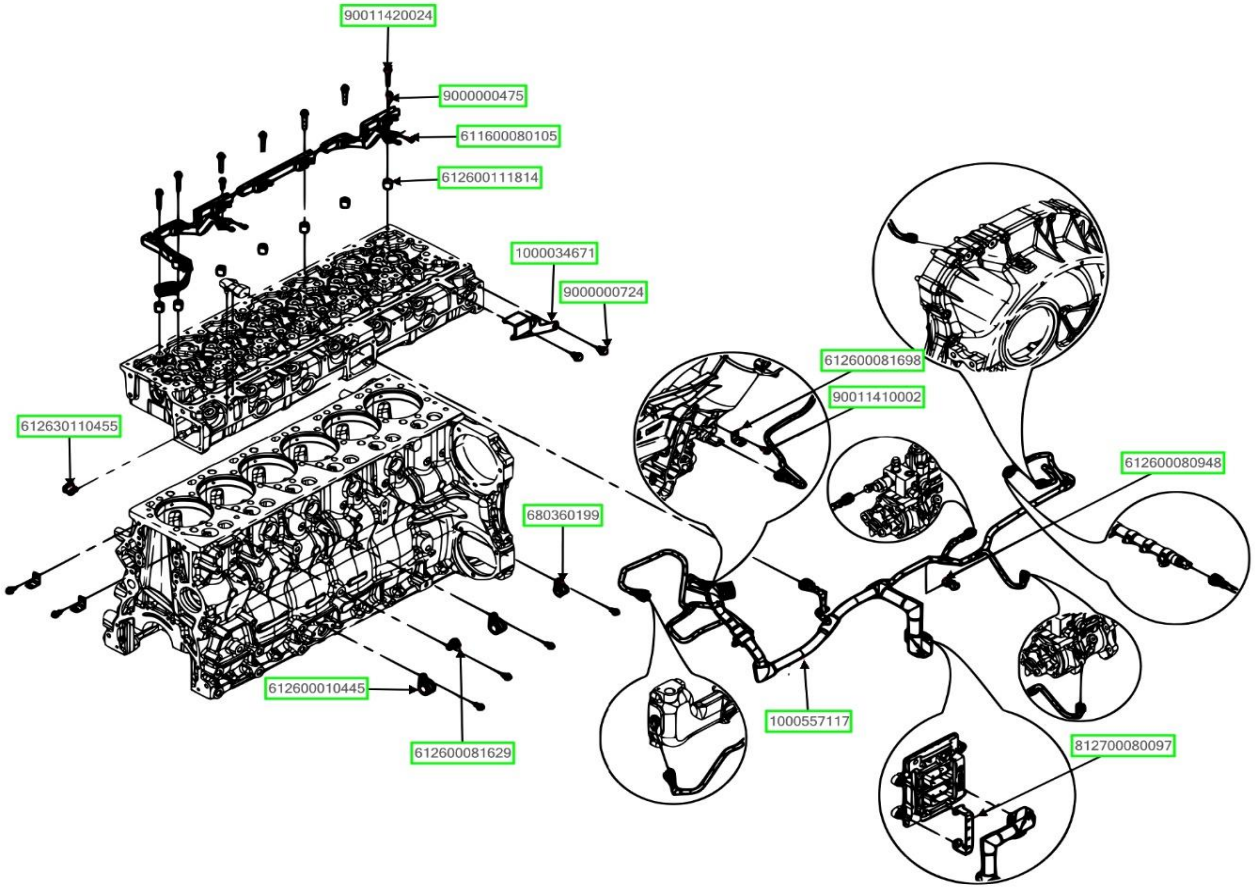


| ASSB_NAME | PART NO. | NAME | QTY |
|---|---|---|---|
| ELECTRONIC CONTROL SYSTEM HARNESS GROUP | 90011420024 | HEXAGON FLANGE BOLT | 7 |
| | 9000000475 | HEXAGON FLANGE BOLT | 2 |
| | 611600080105 | FUEL INJECTOR HARNESS | 1 |
| | 612600111814 | PAD | 7 |
| | 1000034671 | HARNESS BRACKET | 1 |
| | 9000000724 | HEXAGON FLANGE BOLT | 2 |
| | 612600081698 | HARNESS BRACKET | 3 |

| ASSB_NAME | PART NO. | NAME | QTY |
|---|---|---|---|
| ELECTRONIC CONTROL SYSTEM HARNESS GROUP | 90011410002 | HEXAGON FLANGE BOLT | 7 |
| | 612600080948 | PIPE CLAMP ASSEMBLY | 1 |
| | 812700080097 | HARNESS BRACKET | 1 |
| | 1000557117 | ENGINE HARNESS | 1 |
| | 680360199 | PIPE CLAMP ASSEMBLY | 1 |
| | 612600081629 | PIPE CLAMP ASSEMBLY | 1 |
| | 612600010445 | PIPE CLAMP ASSEMBLY | 1 |

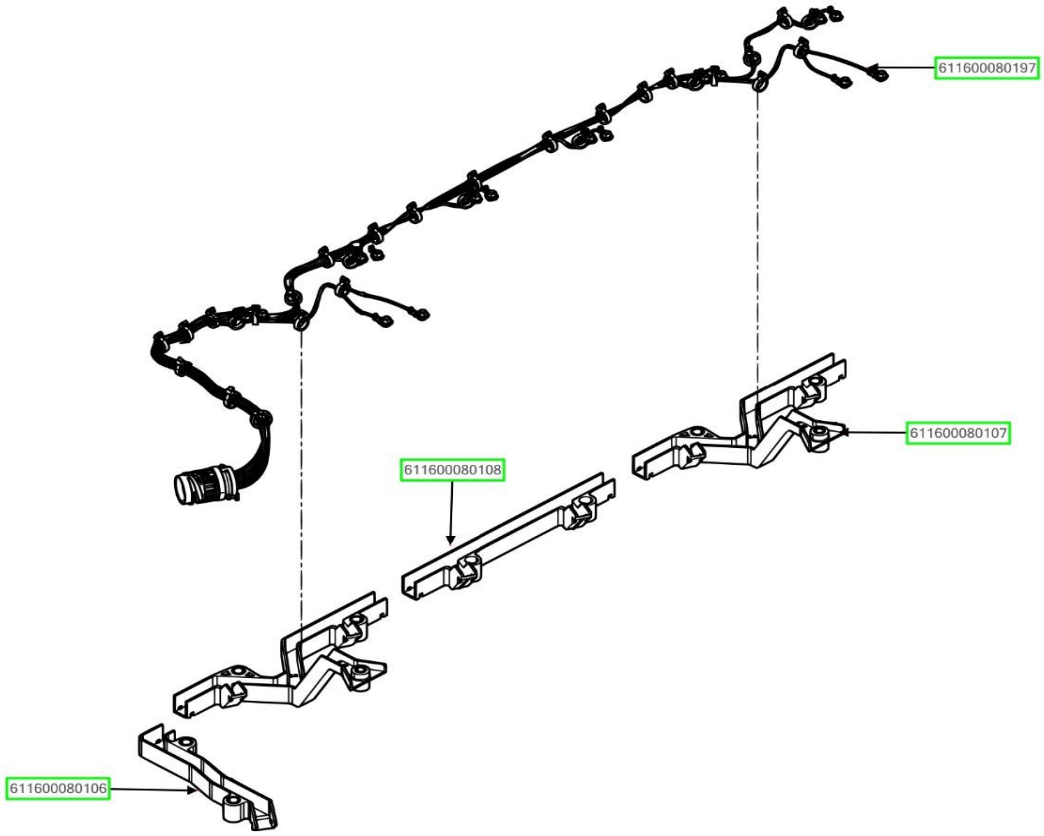


| ASSB_NAME | PART NO. | NAME | QTY |
|---|---|---|---|
| FUEL INJECTOR HARNESS | 611600080197 | FUEL INJECTOR HARNESS | 1 |
| | 611600080107 | HARNESS BRACKET | 2 |
| | 611600080108 | HARNESS BRACKET | 1 |
| | 611600080106 | HARNESS BRACKET | 1 |
| | | | |
| | | | |
| | | | |

| ASSB_NAME | PART NO. | NAME | QTY |
|---|---|---|---|
| FUEL INJECTOR HARNESS | | | |
| | | | |
| | | | |
| | | | |
| | | | |
| | | | |
| | | | |

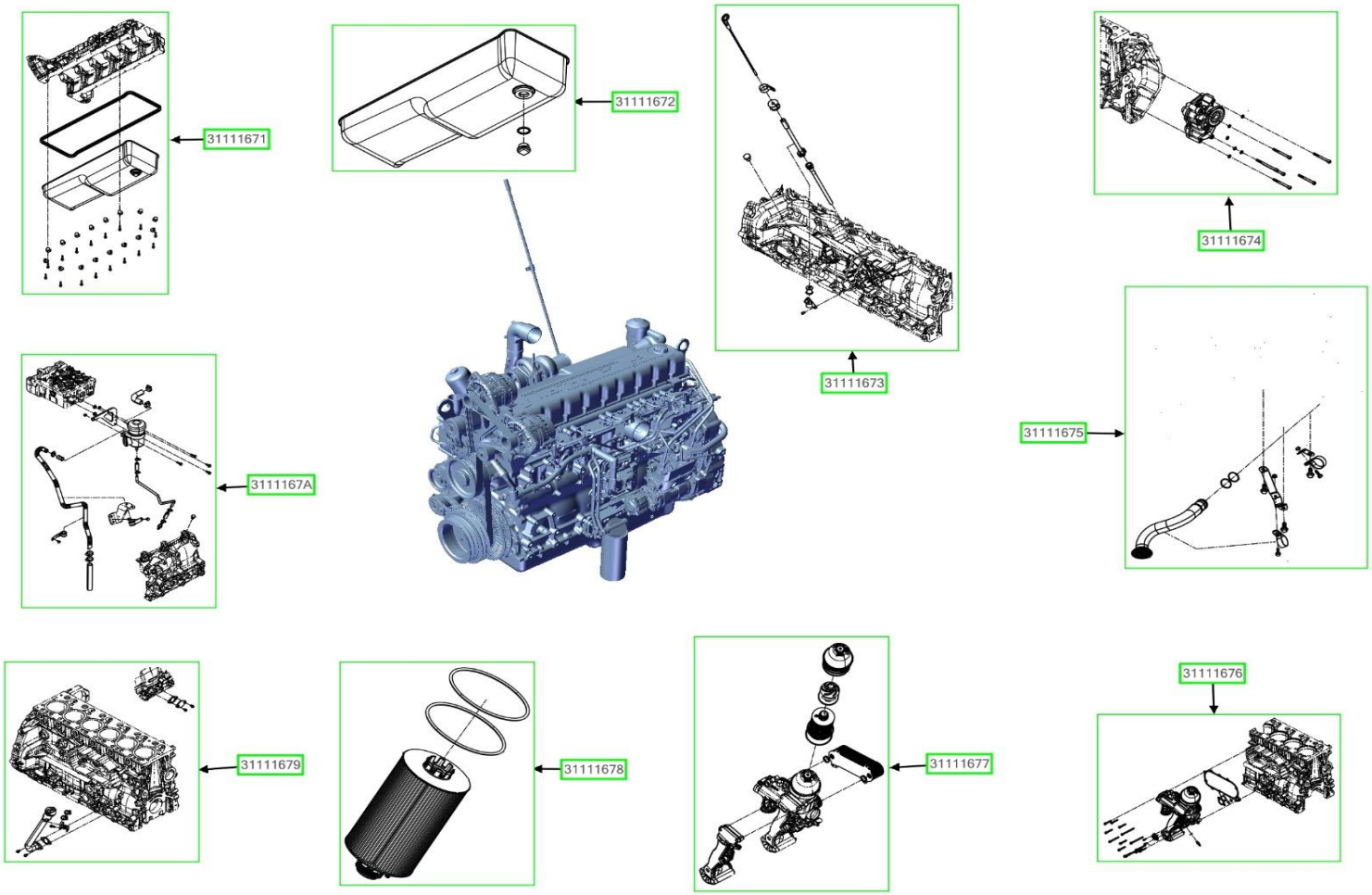


| ASSB_NAME | PART NO. | NAME | QTY |
|---|---|---|---|
| OIL FILTER GROUP | 31111671 | OIL PAN GROUP | 1 |
| | 31111672 | OIL PAN ASSEMBLY | 1 |
| | 31111673 | OIL DIPSTICK GROUP | 1 |
| | 31111674 | OIL PUMP GROUP | 1 |
| | 31111675 | OIL STRAINER GROUP | 1 |
| | 31111676 | OIL COOLER GROUP | 1 |
| | 31111677 | OIL COOLER AND FILTER ASSEMBLY | 1 |

| ASSB_NAME | PART NO. | NAME | QTY |
|---|---|---|---|
| OIL FILTER GROUP | 31111678 | OIL FILTER ELEMENT | 1 |
| | 31111679 | OIL FILLING TUBE GROUP | 1 |
| | 3111167A | OIL-GAS SEPARATOR GROUP | 1 |
| | | | |
| | | | |
| | | | |
| | | | |

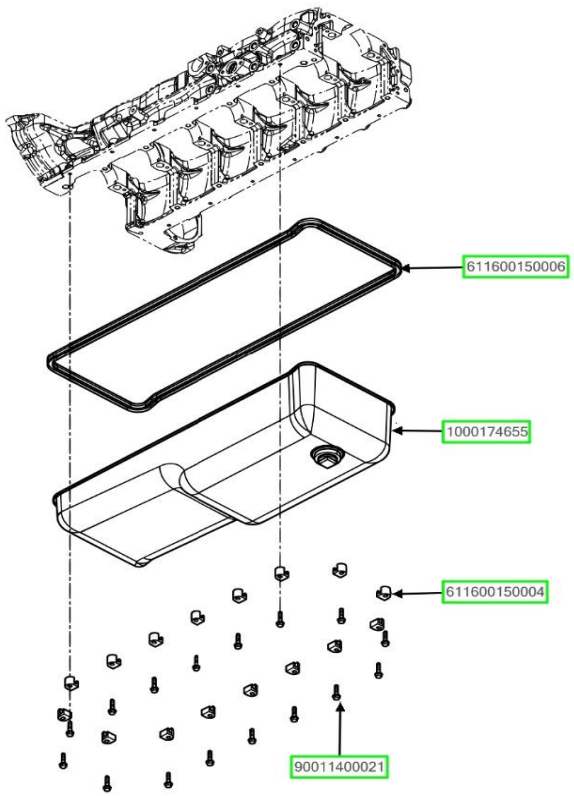


| ASSB_NAME | PART NO. | NAME | QTY |
|---|---|---|---|
| OIL PAN GROUP | 611600150006 | SEAL RING | 1 |
| | 1000174655 | OIL PAN ASSEMBLY | 1 |
| | 611600150004 | RETAINER OF OIL PAN | 16 |
| | 90011400021 | HEXAGON FLANGE BOLT | 16 |
| | | | |
| | | | |
| | | | |

| ASSB_NAME | PART NO. | NAME | QTY |
|---|---|---|---|
| OIL PAN GROUP | | | |
| | | | |
| | | | |
| | | | |
| | | | |
| | | | |
| | | | |

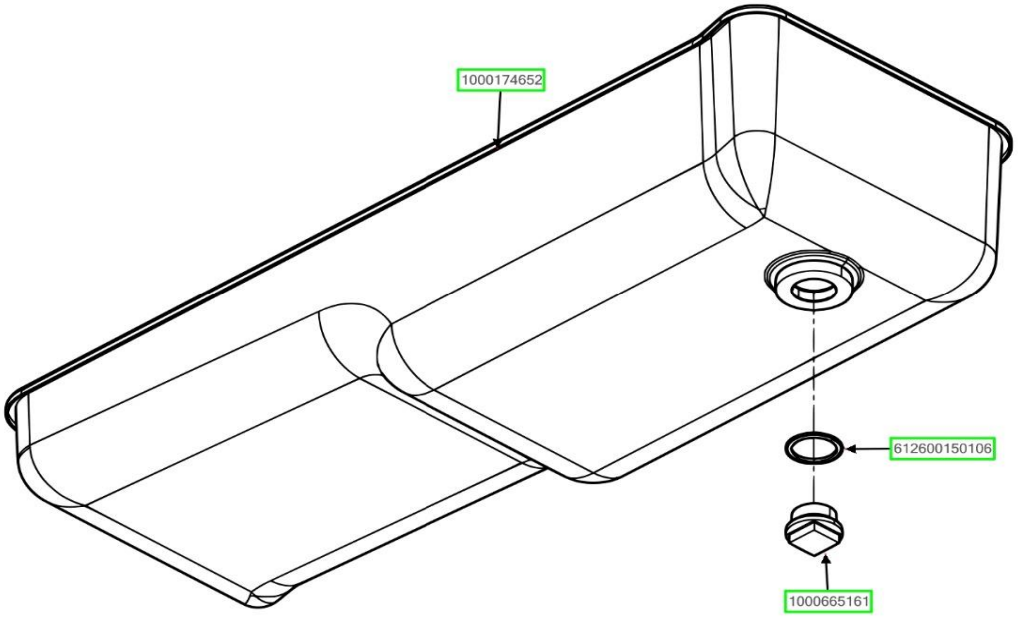


| ASSB_NAME | PART NO. | NAME | QTY |
|---|---|---|---|
| OIL PAN ASSEMBLY | 1000174652 | OIL PAN SET | 1 |
| | 612600150106 | WASHER | 1 |
| | 1000665161 | OIL DRAIN PLUG | 1 |
| | | | |
| | | | |
| | | | |
| | | | |

| ASSB_NAME | PART NO. | NAME | QTY |
|---|---|---|---|
| OIL PAN ASSEMBLY | | | |
| | | | |
| | | | |
| | | | |
| | | | |
| | | | |
| | | | |

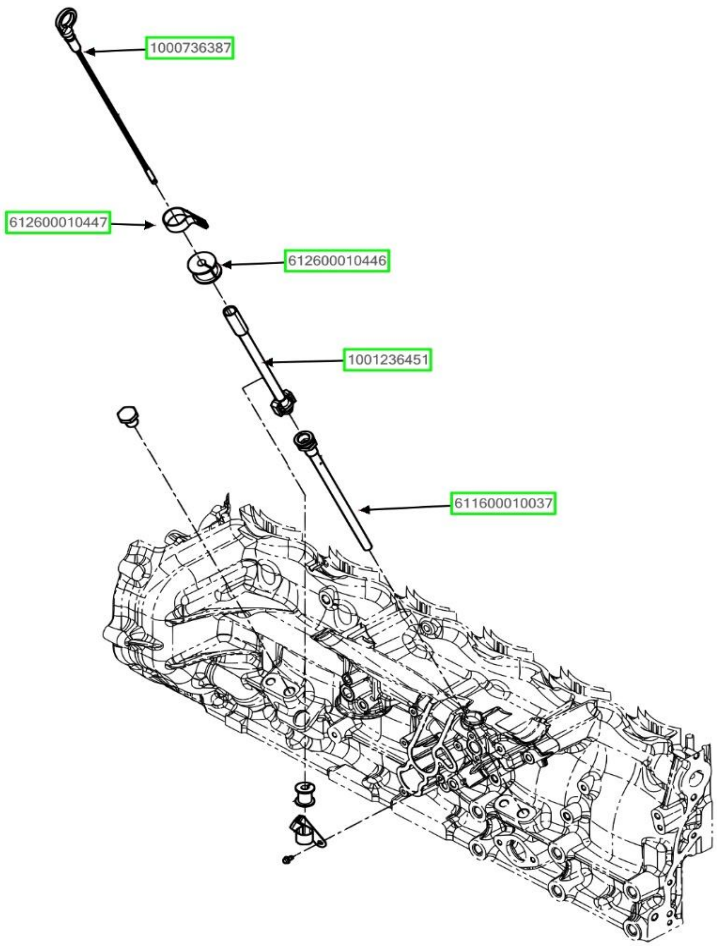


| ASSB_NAME | PART NO. | NAME | QTY |
|---|---|---|---|
| OIL DIPSTICK GROUP | 1000736387 | DIPSTICK | 1 |
| | 612600010447 | PIPE CLAMP | 1 |
| | 612600010446 | RUBBER HOOP | 1 |
| | 1001236451 | DIPSTICK PIPE UPPER SET | 1 |
| | 611600010037 | DIPSTICK PIPE BELOW SET | 1 |
| | 611600010055 | DIPSTICK PIPE CONNECTOR | 1 |
| | 612600010638 | RUBBER HOOP | 1 |

| ASSB_NAME | PART NO. | NAME | QTY |
|---|---|---|---|
| OIL DIPSTICK GROUP | 1000424704 | SINGLE PIPE CLAMP | 1 |
| | 90011410002 | HEXAGON FLANGE BOLT | 1 |
| | | | |
| | | | |
| | | | |
| | | | |
| | | | |

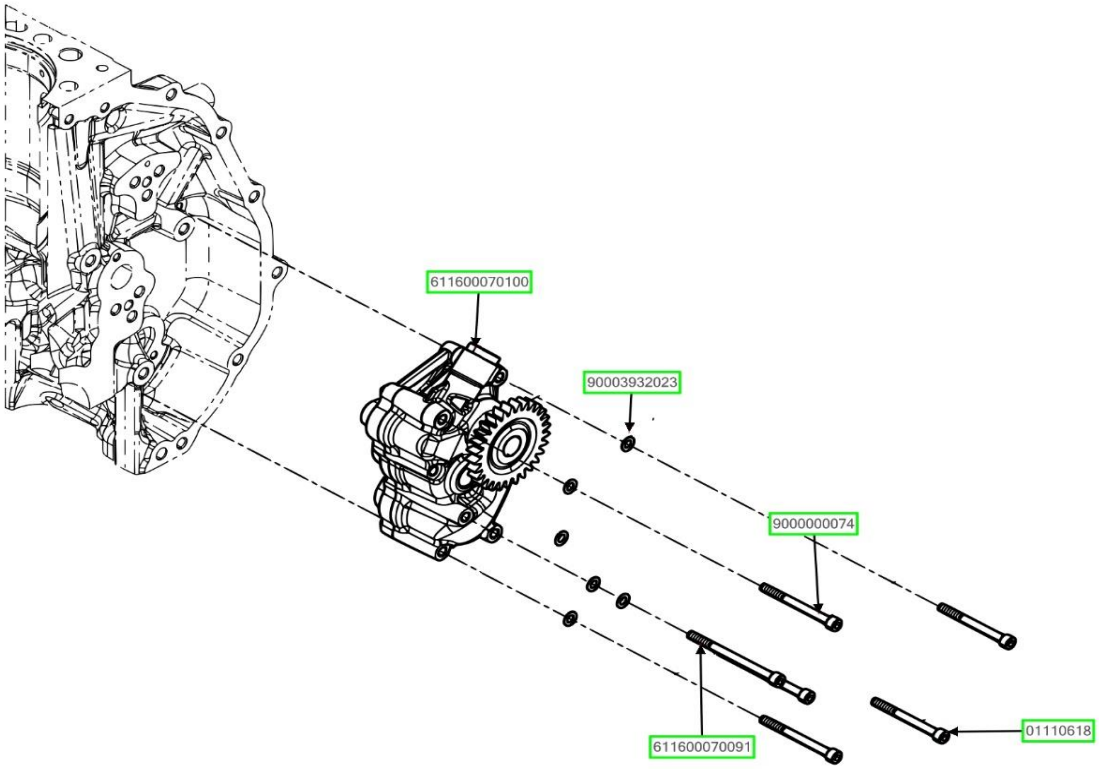


| ASSB_NAME | PART NO. | NAME | QTY |
|---|---|---|---|
| OIL PUMP GROUP | 611600070100 | LUBRICATING OIL PUMP | 1 |
| | 90003932023 | WAVE SPRING WASHER | 6 |
| | 9000000074 | INNER HEXAGON SOCKET HEAD CAP SCREW | 1 |
| | 01110618 | INNER HEXAGON SOCKET HEAD CAP SCREW | 4 |
| | 611600070091 | INNER HEXAGON SOCKET HEAD CAP SCREW | 1 |
| | | | |
| | | | |

| ASSB_NAME | PART NO. | NAME | QTY |
|---|---|---|---|
| OIL PUMP GROUP | | | |
| | | | |
| | | | |
| | | | |
| | | | |
| | | | |
| | | | |

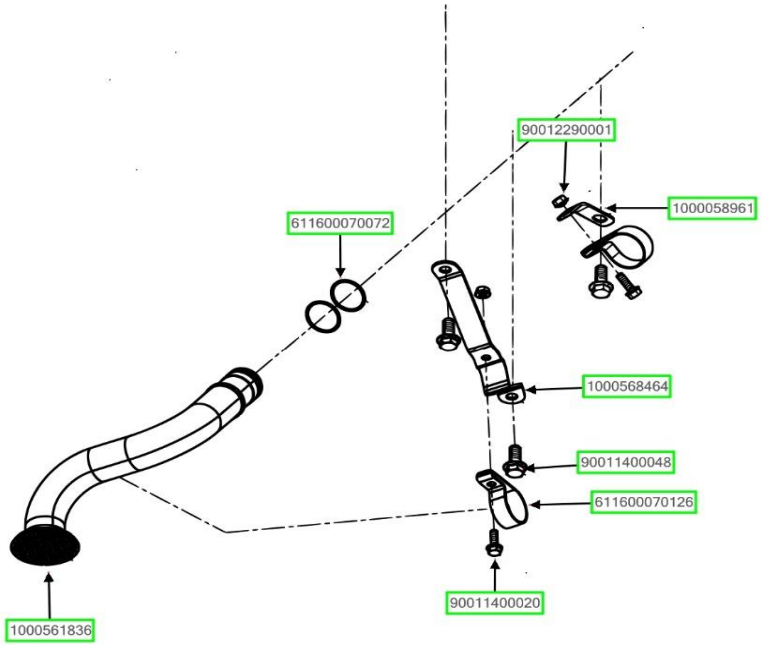


| ASSB_NAME | PART NO. | NAME | QTY |
|---|---|---|---|
| OIL STRAINER GROUP | 1000561836 | LUBRICATING OIL SUCTION STRAINER | 1 |
| | 90011400020 | HEXAGON FLANGE BOLT | 2 |
| | 611600070126 | OIL SUCTION STRAINER BRACKET | 2 |
| | 90011400048 | HEXAGON FLANGE BOLT, HEAVY SERIES | 3 |
| | 1000568464 | OIL SUCTION STRAINER BRACKET | 1 |
| | 1000058961 | OIL SUCTION STRAINER BRACKET | 1 |
| | 90012290001 | HEXAGON FLANGE NUT | 2 |

| ASSB_NAME | PART NO. | NAME | QTY |
|---|---|---|---|
| OIL STRAINER GROUP | 611600070072 | O-RING | 2 |
| | | | |
| | | | |
| | | | |
| | | | |
| | | | |
| | | | |

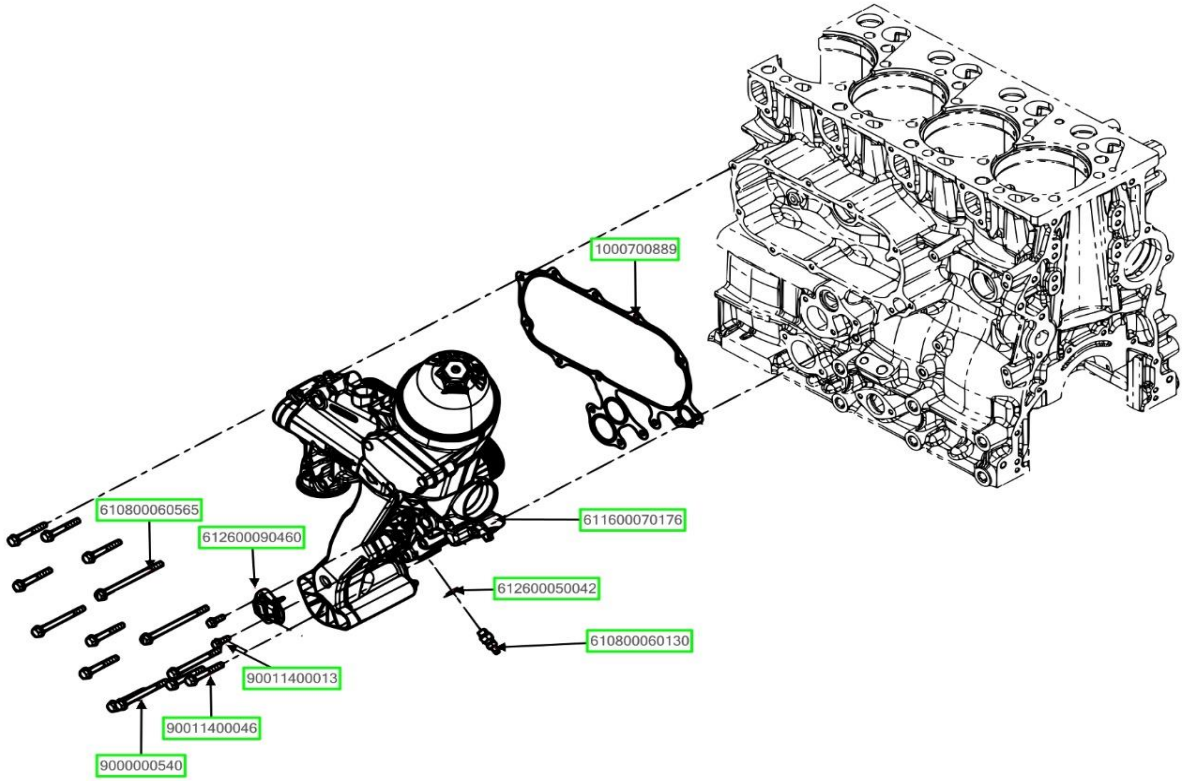


| ASSB_NAME | PART NO. | NAME | QTY |
|---|---|---|---|
| OIL COOLER GROUP | 1000700889 | OIL COOLER CAP GASKET | 1 |
| | 611600070176 | OIL COOLER AND FILTER ASSEMBLY | 1 |
| | 612600050042 | SEALING WASHER | 1 |
| | 610800060130 | WATER DRAINING VALVE | 1 |
| | 612600090460 | PRESSURE AND TEMPERATURE SENSOR | 1 |
| | 90011400013 | HEXAGON FLANGE BOLT | 2 |
| | 90011400046 | HEXAGON FLANGE BOLT, HEAVY SERIES | 9 |

| ASSB_NAME | PART NO. | NAME | QTY |
|---|---|---|---|
| OIL COOLER GROUP | 9000000540 | HEXAGON FLANGE BOLT | 3 |
| | 610800060565 | HEXAGON FLANGE BOLT | 2 |
| | | | |
| | | | |
| | | | |
| | | | |
| | | | |

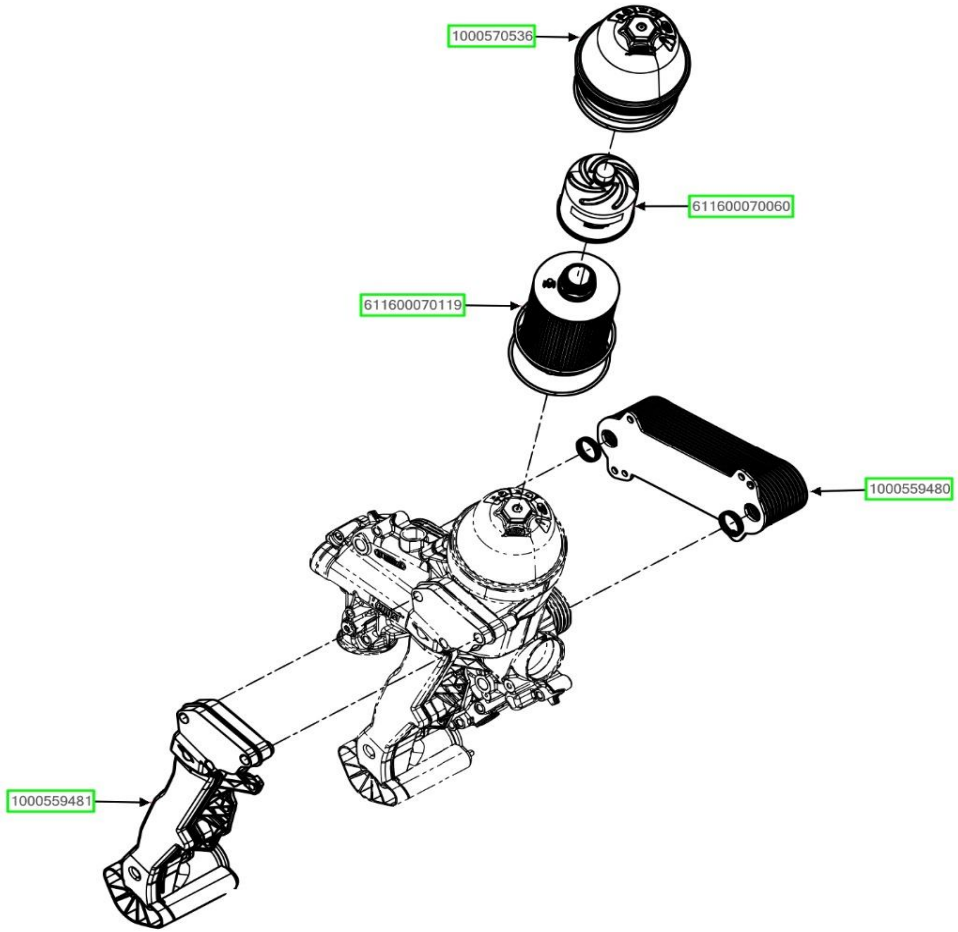


| ASSB_NAME | PART NO. | NAME | QTY |
|---|---|---|---|
| OIL COOLER AND FILTER ASSEMBLY | 1000570536 | OIL FILTER COVER | 1 |
| | 611600070060 | CENTRIFUGAL FILTER ELEMENT | 1 |
| | 611600070119 | OIL FILTER ELEMENT | 1 |
| | 1000559481 | OIL FILTER OIL PIPE | 1 |
| | 1000559480 | OIL COOLER | 1 |
| | | | |
| | | | |

| ASSB_NAME | PART NO. | NAME | QTY |
|---|---|---|---|
| OIL COOLER AND FILTER ASSEMBLY | | | |
| | | | |
| | | | |
| | | | |
| | | | |
| | | | |
| | | | |

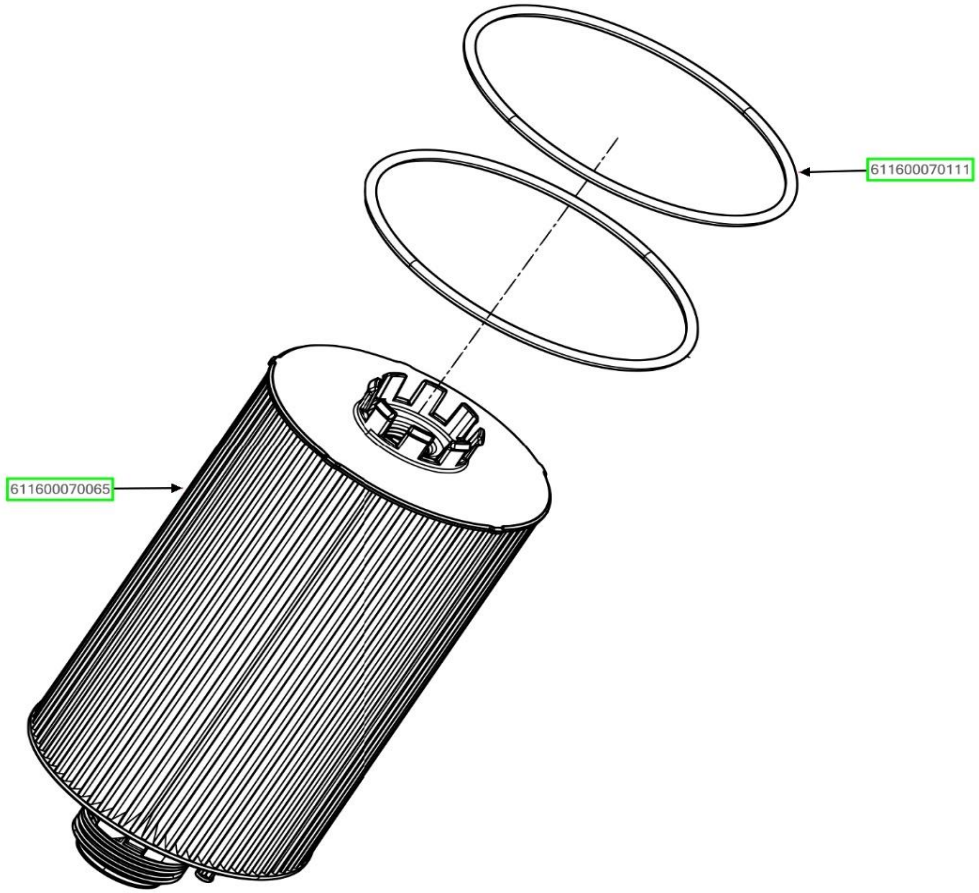


| ASSB_NAME | PART NO. | NAME | QTY |
|---|---|---|---|
| OIL FILTER ELEMENT | 611600070111 | O-RING | 2 |
| | 611600070065 | OIL FILTER ELEMENT | 1 |
| | | | |
| | | | |
| | | | |
| | | | |
| | | | |

| ASSB_NAME | PART NO. | NAME | QTY |
|---|---|---|---|
| OIL FILTER ELEMENT | | | |
| | | | |
| | | | |
| | | | |
| | | | |
| | | | |
| | | | |

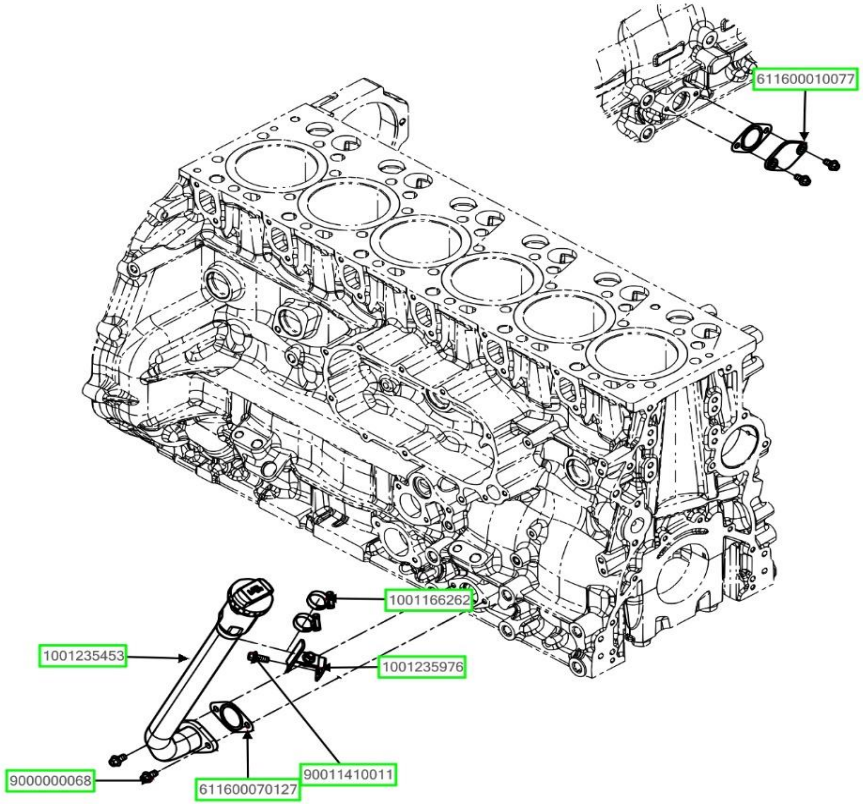


| ASSB_NAME | PART NO. | NAME | QTY |
|---|---|---|---|
| OIL FILLING TUBE GROUP | 611600010077 | OIL FILLER CAP | 1 |
| | 1001166262 | CLAMP | 2 |
| | 1001235976 | BRACKET | 1 |
| | 90011410011 | HEXAGON FLANGE BOLT | 1 |
| | 611600070127 | GASKET | 2 |
| | 1001235453 | OIL FILLING TUBE ASSEMBLY | 1 |
| | 9000000068 | HEXAGON FLANGE BOLT | 4 |

| ASSB_NAME | PART NO. | NAME | QTY |
|---|---|---|---|
| OIL FILLING TUBE GROUP | | | |
| | | | |
| | | | |
| | | | |
| | | | |
| | | | |
| | | | |

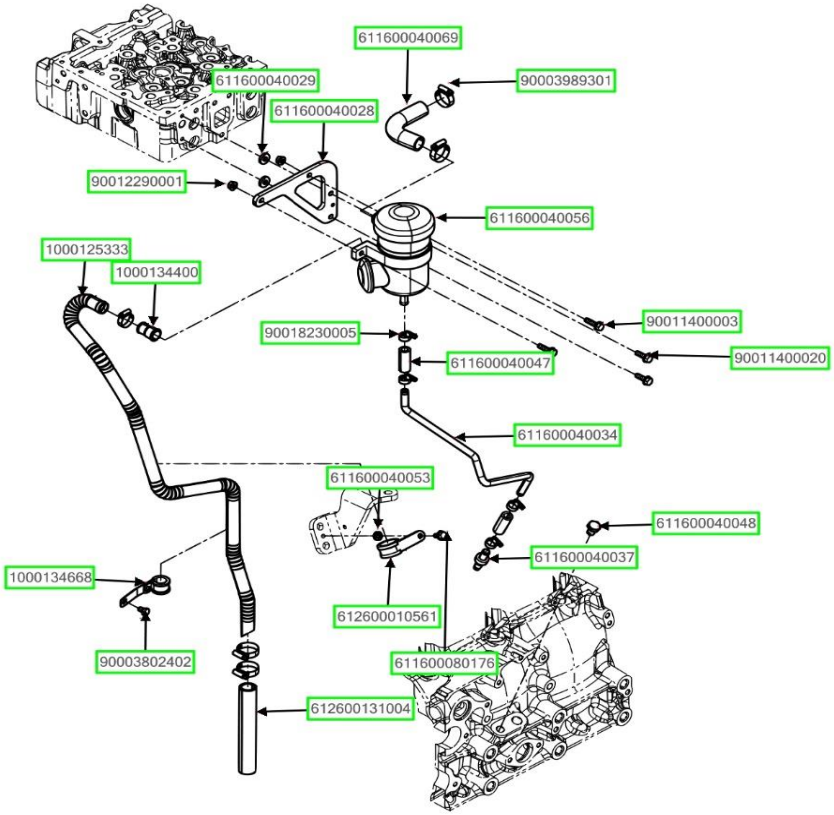


| ASSB_NAME | PART NO. | NAME | QTY |
|---|---|---|---|
| OIL-GAS SEPARATOR GROUP | 611600040029 | WASHER | 2 |
| | 90012290001 | HEXAGON FLANGE NUT | 2 |
| | 90003989301 | CLAMP | 5 |
| | 611600040069 | RUBBER SLEEVE | 1 |
| | 611600040056 | OIL-GAS SEPARATOR ASSEMBLY | 1 |
| | 90011400003 | HEXAGON FLANGE BOLT | 2 |
| | 90011400020 | HEXAGON FLANGE BOLT | 2 |

| ASSB_NAME | PART NO. | NAME | QTY |
|---|---|---|---|
| OIL-GAS SEPARATOR GROUP | 90018230005 | HOSES CLAMP | 4 |
| | 611600040047 | RUBBER SLEEVE | 2 |
| | 611600040034 | OIL-GAS SEPARATOR OIL-RETURN PIPE | 1 |
| | 611600080176 | HEXAGON FLANGE BOLT | 1 |
| | 611600040037 | OIL-GAS SEPARATOR RETURN OIL VALVE | 1 |
| | 612600010561 | PIPE CLAMP ASSEMBLY | 1 |
| | 611600040053 | WASHER | 1 |

| ASSB_NAME | PART NO. | NAME | QTY |
|---|---|---|---|
| OIL-GAS SEPARATOR GROUP | 611600040048 | HEXAGON SCREW PLUG | 1 |
| | 612600131004 | AIR CONNECTING RUBBER PIPE | 1 |
| | 90003802402 | HEXAGON HEAD BOLT | 1 |
| | 1000134668 | PIPE CLAMP ASSEMBLY | 1 |
| | 1000125333 | OIL-GAS SEPARATOR AIR-OUTLET PIPE | 1 |
| | 1000134400 | RUBBER SLEEVE | 1 |
| | 611600040028 | OIL-GAS SEPARATOR BRACKET | 1 |

| ASSB_NAME | PART NO. | NAME | QTY |
|---|---|---|---|
| OIL-GAS SEPARATOR GROUP | | | |

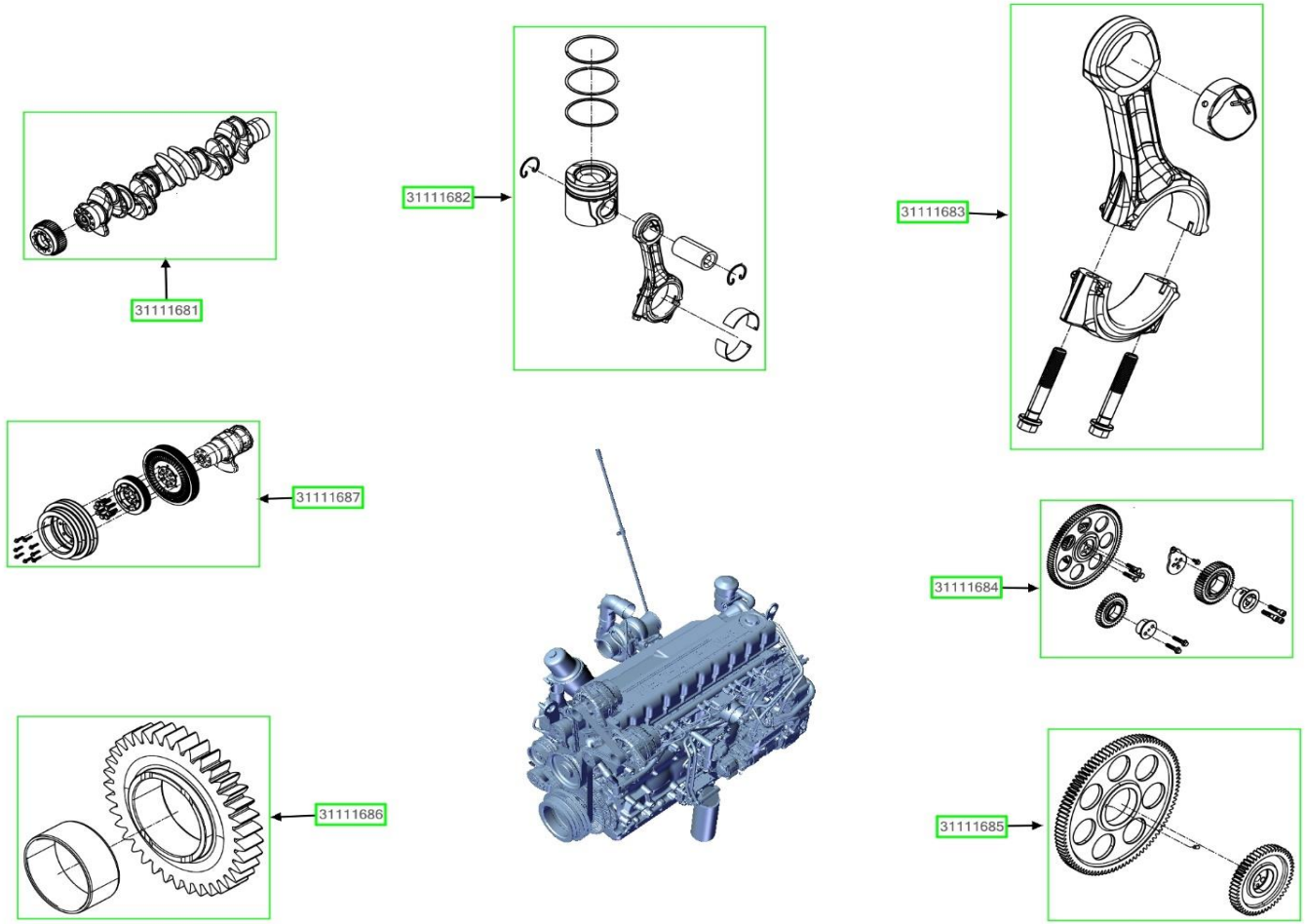


| ASSB_NAME | PART NO. | NAME | QTY |
|---|---|---|---|
| TRANSMISSION SYSTEM | 31111681 | CRANKSHAFT GROUP | 1 |
| | 31111682 | PISTON AND CONNECTING ROD GROUP | 2 |
| | 31111683 | CONNECTING ROD ASSEMBLY | 3 |
| | 31111684 | GEAR DRIVE GROUP | 4 |
| | 31111685 | IDLER GEAR SET | 5 |
| | 31111686 | IDLER GEAR ASSEMBLY | 6 |
| | 31111687 | CRANKSHAFT PULLEY GROUP | 7 |

| ASSB_NAME | PART NO. | NAME | QTY |
|---|---|---|---|
| TRANSMISSION SYSTEM | | | |
| | | | |
| | | | |
| | | | |
| | | | |
| | | | |
| | | | |

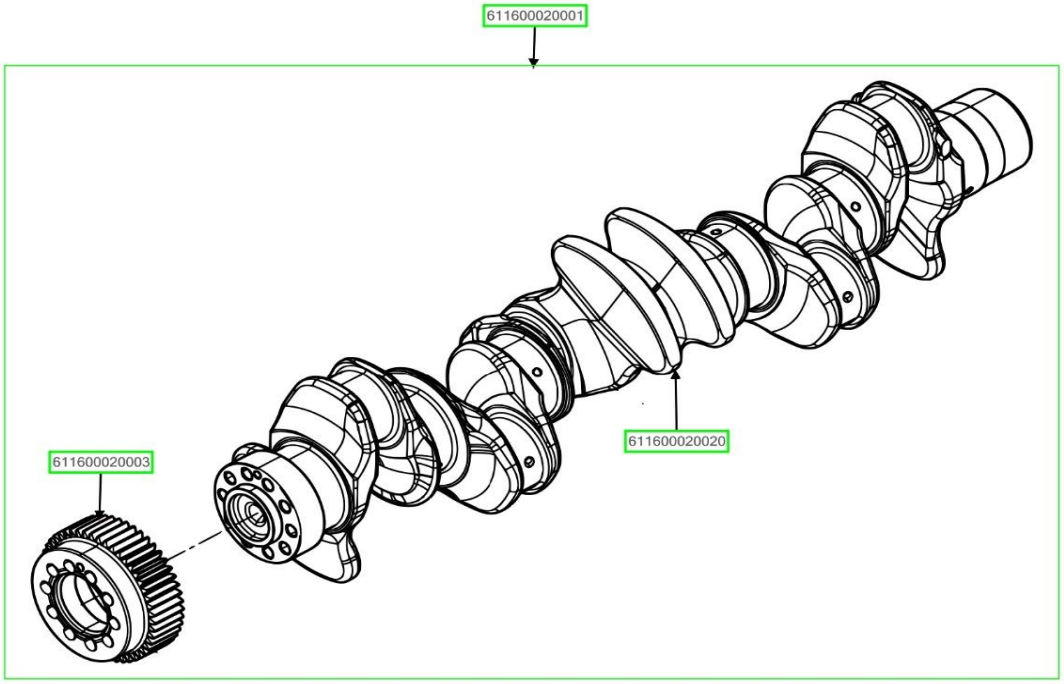


| ASSB_NAME | PART NO. | NAME | QTY |
|---|---|---|---|
| CRANKSHAFT GROUP | 611600020001 | CRANKSHAFT ASSEMBLY | 1 |
| | 611600020020 | CRANKSHAFT | 1 |
| | 611600020003 | CRANKSHAFT GEAR | 1 |
| | | | |
| | | | |
| | | | |
| | | | |

| ASSB_NAME | PART NO. | NAME | QTY |
|---|---|---|---|
| CRANKSHAFT GROUP | | | |
| | | | |
| | | | |
| | | | |
| | | | |
| | | | |
| | | | |

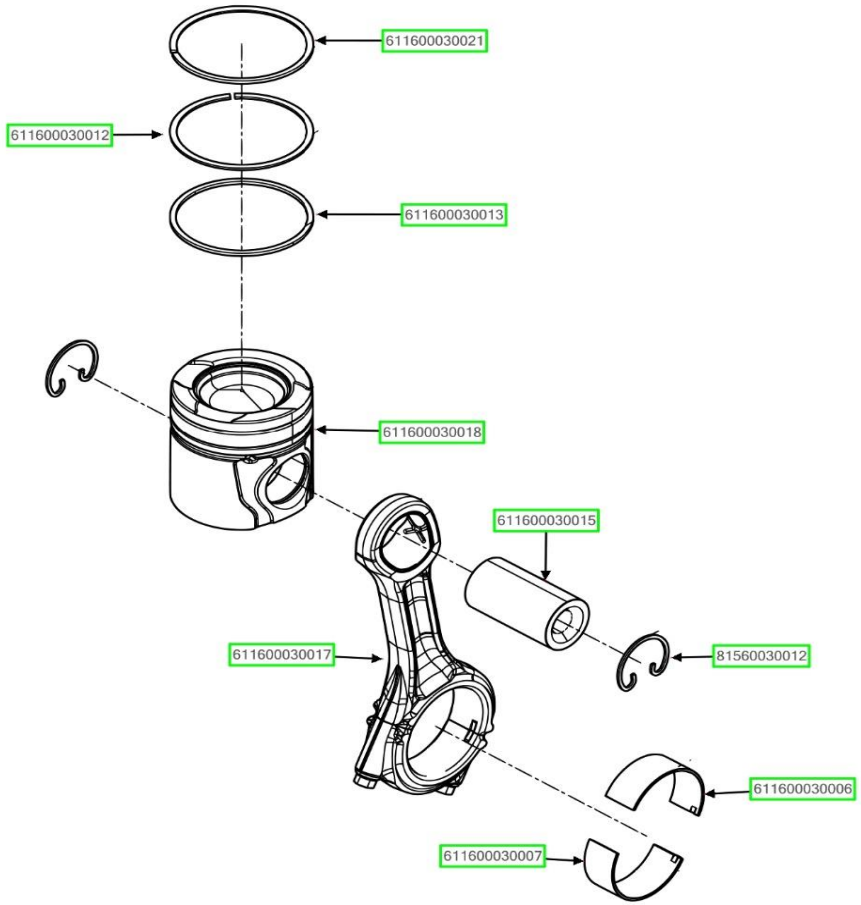


| ASSB_NAME | PART NO. | NAME | QTY |
|---|---|---|---|
| PISTON AND CONNECTING ROD GROUP | 611600030021 | KEYSTONE BARREL RING | 6 |
| | 611600030012 | TWIST TAPER RING | 6 |
| | 611600030013 | COIL SPRING LOADED OIL-CONTROL RI | 6 |
| | 611600030018 | PISTON | 6 |
| | 611600030017 | CONNECTING ROD ASSEMBLY | 6 |
| | 611600030015 | PISTON PIN | 6 |
| | 81560030012 | PISTON PIN RETAINER | 12 |

| ASSB_NAME | PART NO. | NAME | QTY |
|---|---|---|---|
| PISTON AND CONNECTING ROD GROUP | 611600030006 | CONNECTING ROD UPPER SHELL | 6 |
| | 611600030007 | CONNECTING ROD LOWER SHELL | 6 |
| | | | |
| | | | |
| | | | |
| | | | |
| | | | |

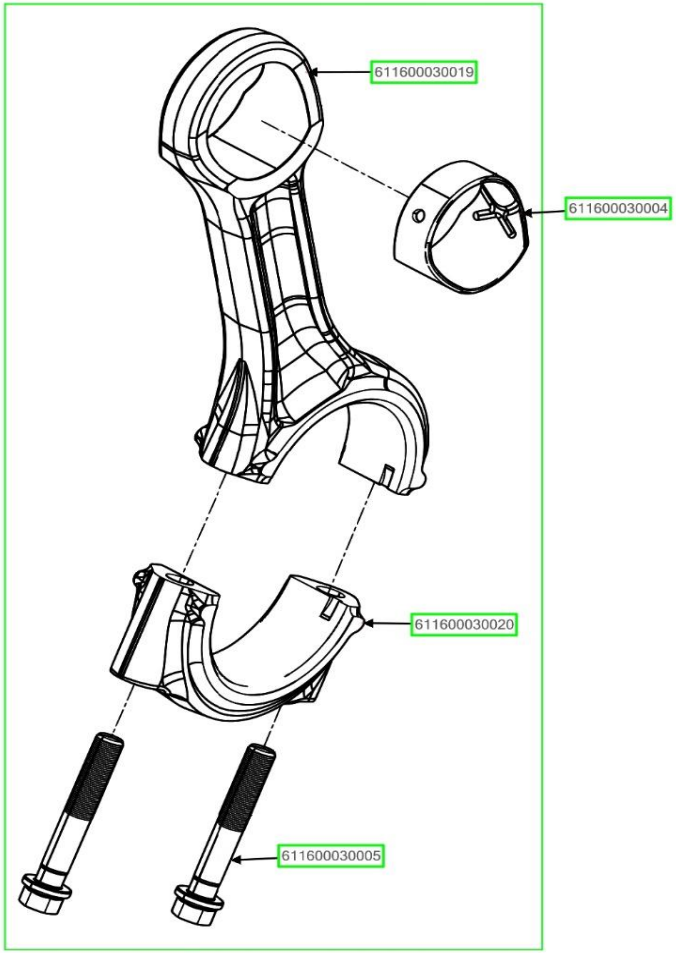


| ASSB_NAME | PART NO. | NAME | QTY |
|---|---|---|---|
| CONNECTING ROD ASSEMBLY | 611600030019 | CONNECTING ROD BODY | 1 |
| | 611600030004 | CONNECTING ROD BUSH | 1 |
| | 611600030020 | CONNECTING ROD COVER | 1 |
| | 611600030005 | CONNECTING ROD BOLT | 2 |
| | | | |
| | | | |
| | | | |

| ASSB_NAME | PART NO. | NAME | QTY |
|---|---|---|---|
| CONNECTING ROD ASSEMBLY | | | |
| | | | |
| | | | |
| | | | |
| | | | |
| | | | |
| | | | |

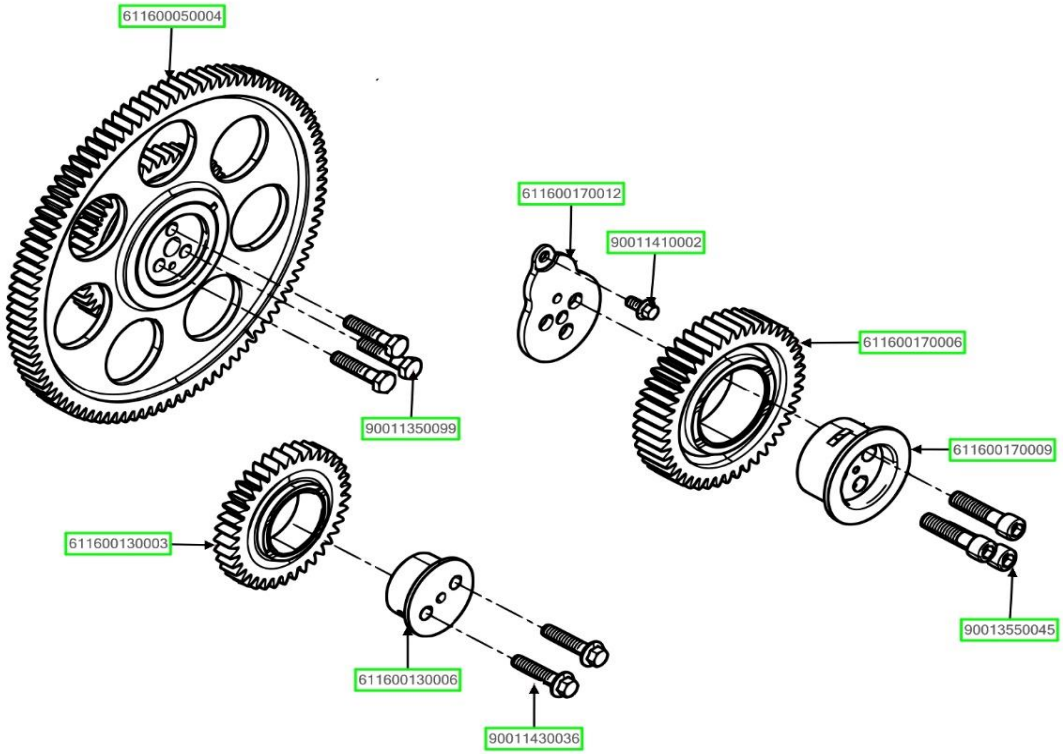


| ASSB_NAME | PART NO. | NAME | QTY |
|---|---|---|---|
| GEAR DRIVE GROUP | 611600050004 | IDLER GEAR SET | 1 |
| | 90011350099 | HEXAGON HEAD BOLT | 3 |
| | 611600170012 | MIDDLE GEAR COVER | 1 |
| | 90011410002 | HEXAGON FLANGE BOLT | 1 |
| | 611600170006 | IDLER GEAR ASSEMBLY | 1 |
| | 611600170009 | IDLER GEAR SHAFT | 1 |
| | 90013550045 | INNER HEXAGON SOCKET HEAD CAP SCREW | 3 |

| ASSB_NAME | PART NO. | NAME | QTY |
|---|---|---|---|
| GEAR DRIVE GROUP | 611600130003 | IDLER GEAR ASSEMBLY | 1 |
| | 611600130006 | IDLER GEAR SHAFT | 1 |
| | 90011430036 | HEXAGON FLANGE WITH TOOTH BOLT | 2 |
| | | | |
| | | | |
| | | | |
| | | | |

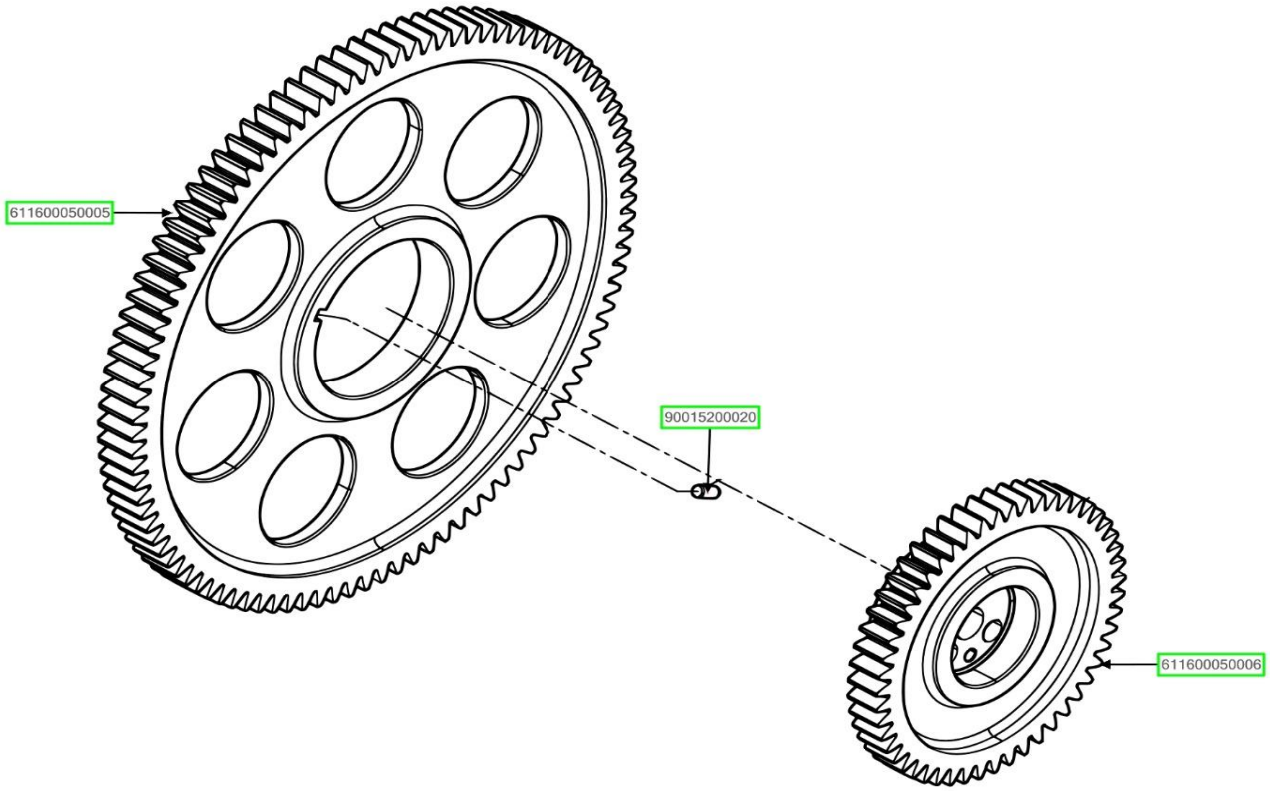


| ASSB_NAME | PART NO. | NAME | QTY |
|---|---|---|---|
| IDLER GEAR SET | 611600050005 | CAMSHAFT TIMING GEAR | 1 |
| | 90015200020 | PARALLEL PIN | 1 |
| | 611600050006 | IDLER GEAR | 1 |
| | | | |
| | | | |
| | | | |
| | | | |

| ASSB_NAME | PART NO. | NAME | QTY |
|---|---|---|---|
| IDLER GEAR SET | | | |
| | | | |
| | | | |
| | | | |
| | | | |
| | | | |
| | | | |

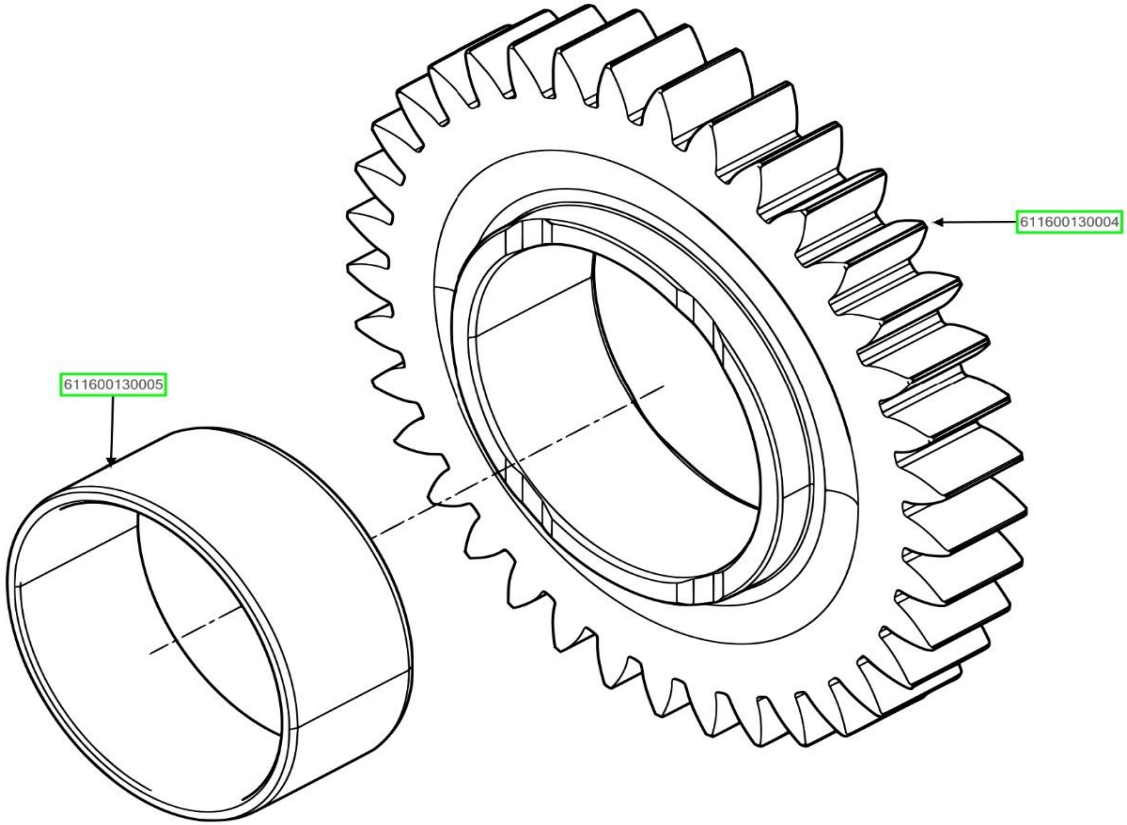


| ASSB_NAME | PART NO. | NAME | QTY |
|---|---|---|---|
| IDLER GEAR ASSEMBLY | 611600130005 | GEAR BUSH | 1 |
| | 611600130004 | AIR COMPRESSOR GEAR | 1 |
| | | | |
| | | | |
| | | | |
| | | | |
| | | | |

| ASSB_NAME | PART NO. | NAME | QTY |
|---|---|---|---|
| IDLER GEAR ASSEMBLY | | | |
| | | | |
| | | | |
| | | | |
| | | | |
| | | | |
| | | | |

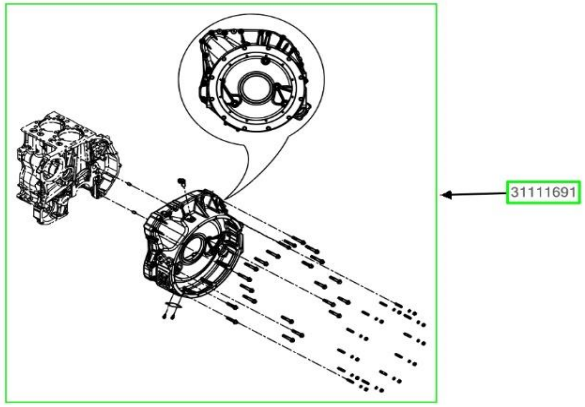


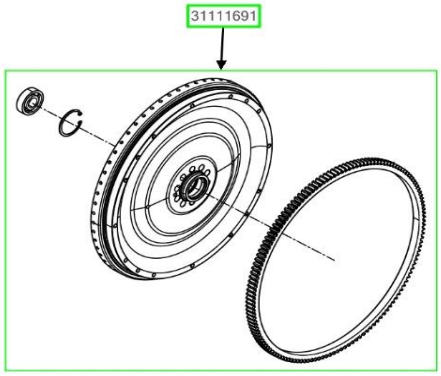


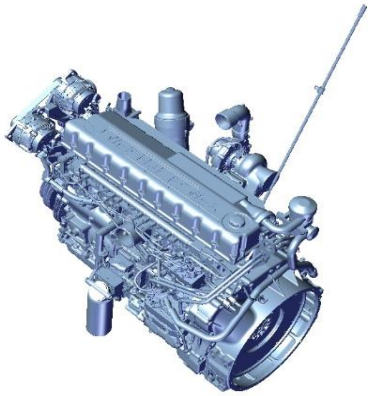

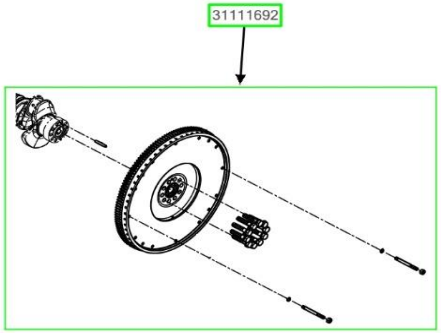


| ASSB_NAME | PART NO. | NAME | QTY |
|---|---|---|---|
| FLYWHEEL GROUP | 31111691 | FLYWHEEL HOUSING GROUP | 1 |
| | 31111692 | FLYWHEEL GROUP | 1 |
| | 31111693 | FLYWHEEL ASSEMBLY | 8 |
| | | | |
| | | | |
| | | | |
| | | | |

| ASSB_NAME | PART NO. | NAME | QTY |
|---|---|---|---|
| FLYWHEEL GROUP | | | |
| | | | |
| | | | |
| | | | |
| | | | |
| | | | |
| | | | |

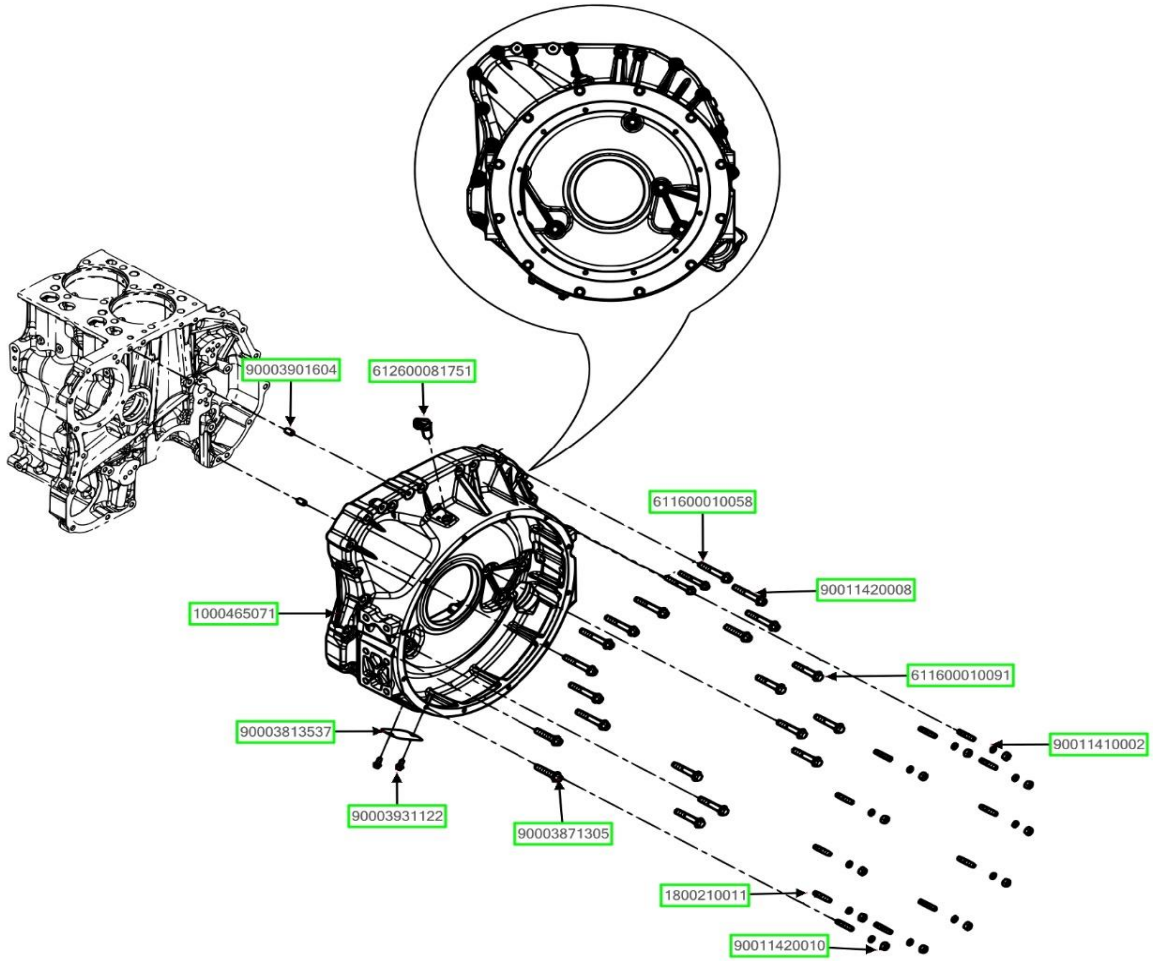


| ASSB_NAME | PART NO. | NAME | QTY |
|---|---|---|---|
| FLYWHEEL HOUSING GROUP | 90003901604 | PARALLEL PIN | 2 |
| | 612600081751 | SPEED SENSOR | 1 |
| | 1000465071 | FLYWHEEL HOUSING | 1 |
| | 611600010058 | HEXAGON FLANGE BOLT | 2 |
| | 90011420008 | HEXAGON FLANGE BOLT | 9 |
| | 611600010091 | HEXAGON FLANGE BOLT | 8 |
| | 90003871305 | HEXAGON NUTS, STYLE 1 | 12 |

| ASSB_NAME | PART NO. | NAME | QTY |
|---|---|---|---|
| FLYWHEEL HOUSING GROUP | 90003931122 | SPRING WASHER | 12 |
| | 90003813537 | DOUBLE END STUD | 12 |
| | 90011420010 | HEXAGON FLANGE BOLT | 3 |
| | 90011410002 | HEXAGON FLANGE BOLT | 2 |
| | 1800210011 | HANDHOLE COVER | 1 |
| | | | |
| | | | |

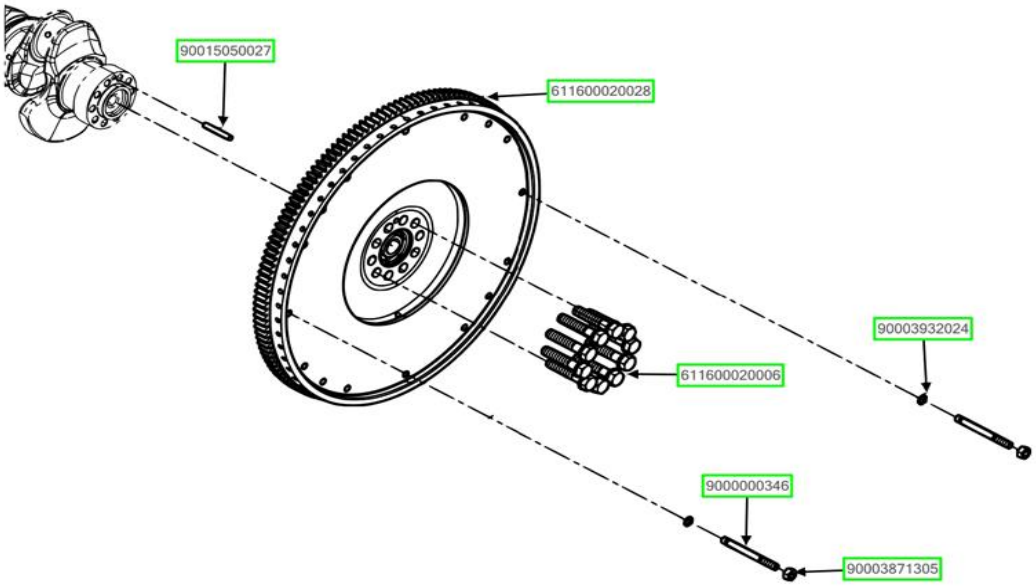


| ASSB_NAME | PART NO. | NAME | QTY |
|---|---|---|---|
| FLYWHEEL GROUP | 90015050027 | PARALLEL PIN | 1 |
| | 611600020028 | FLYWHEEL ASSEMBLY | 1 |
| | 611600020006 | FLYWHEEL BOLT | 10 |
| | 90003932024 | WAVE SPRING WASHER | 2 |
| | 90003871305 | HEXAGON NUTS, STYLE 1 | 2 |
| | 9000000346 | DOUBLE END STUD | 2 |
| | | | |

| ASSB_NAME | PART NO. | NAME | QTY |
|---|---|---|---|
| FLYWHEEL GROUP | | | |
| | | | |
| | | | |
| | | | |
| | | | |
| | | | |
| | | | |

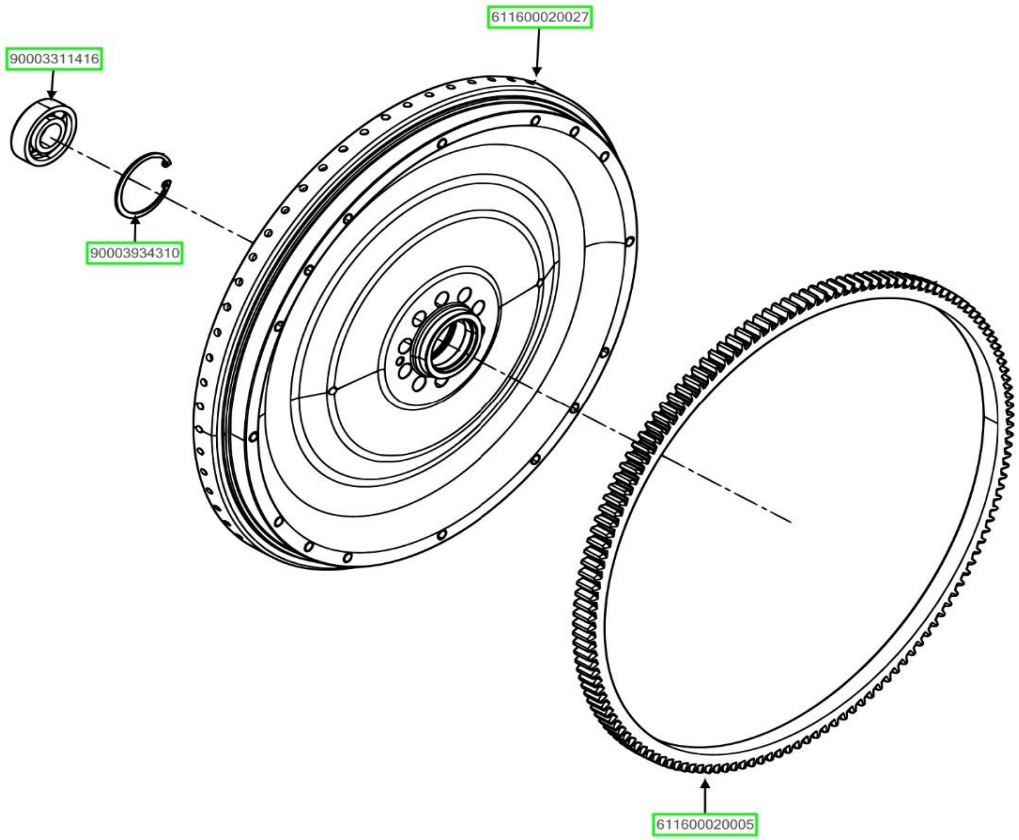


| ASSB_NAME | PART NO. | NAME | QTY |
|---|---|---|---|
| FLYWHEEL ASSEMBLY | 90003311416 | THRUST BEARING | 1 |
| | 90003934310 | CIRCLIP FOR HOLE | 1 |
| | 611600020027 | FLYWHEEL | 1 |
| | 611600020005 | FLYWHEEL RING GEAR | 1 |
| | | | |
| | | | |
| | | | |

| ASSB_NAME | PART NO. | NAME | QTY |
|---|---|---|---|
| FLYWHEEL ASSEMBLY | | | |
| | | | |
| | | | |
| | | | |
| | | | |
| | | | |
| | | | |

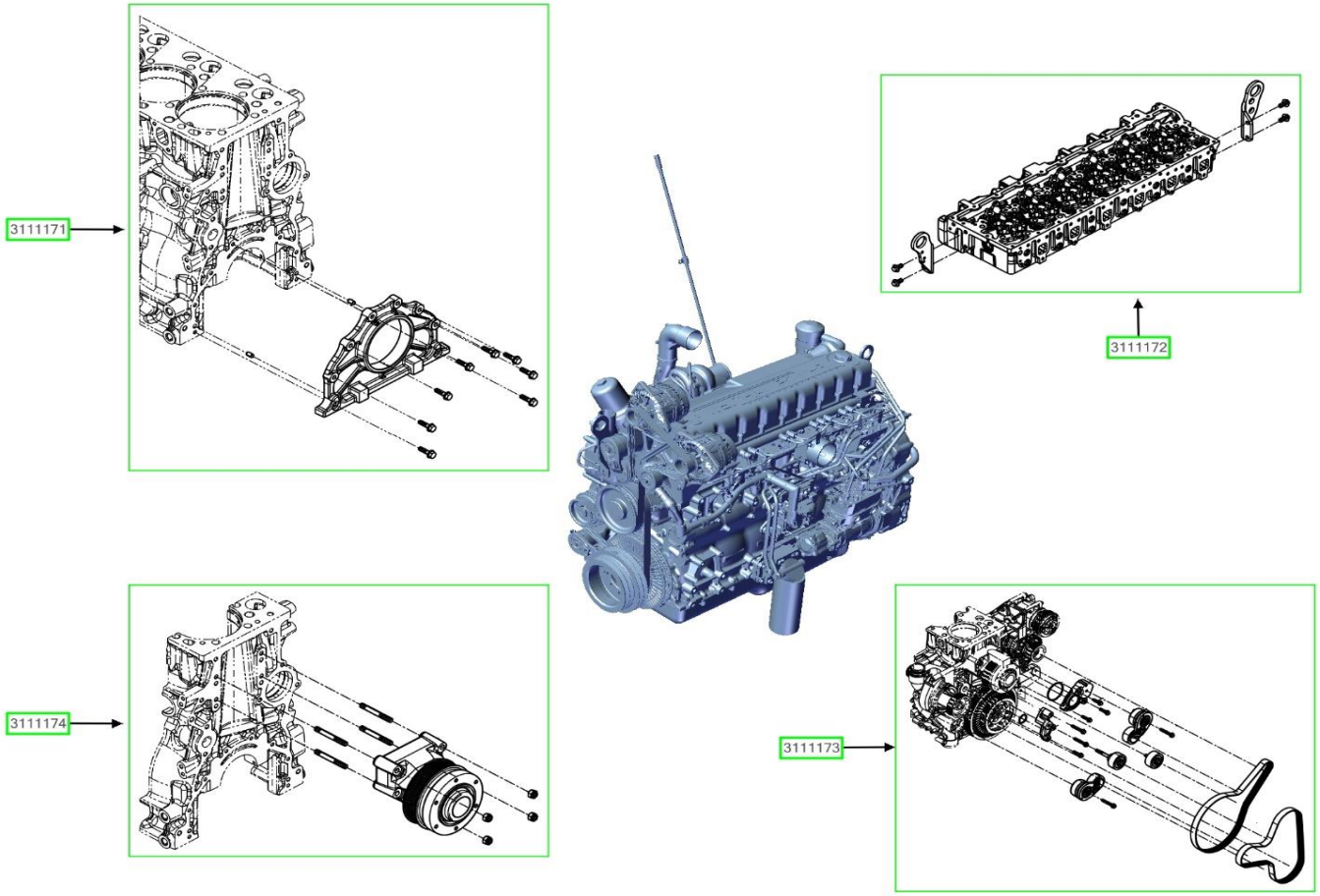


| ASSB_NAME | PART NO. | NAME | QTY |
|---|---|---|---|
| MINOR ITEMS | 3111171 | FRONT COVER GROUP | 1 |
| | 3111172 | EYE RING GROUP | 1 |
| | 3111173 | FAN BRACKET GROUP | 1 |
| | 3111174 | TENSIONER AND BELT GROUP | 1 |
| | | | |
| | | | |
| | | | |

| ASSB_NAME | PART NO. | NAME | QTY |
|---|---|---|---|
| MINOR ITEMS | | | |
| | | | |
| | | | |
| | | | |
| | | | |
| | | | |
| | | | |

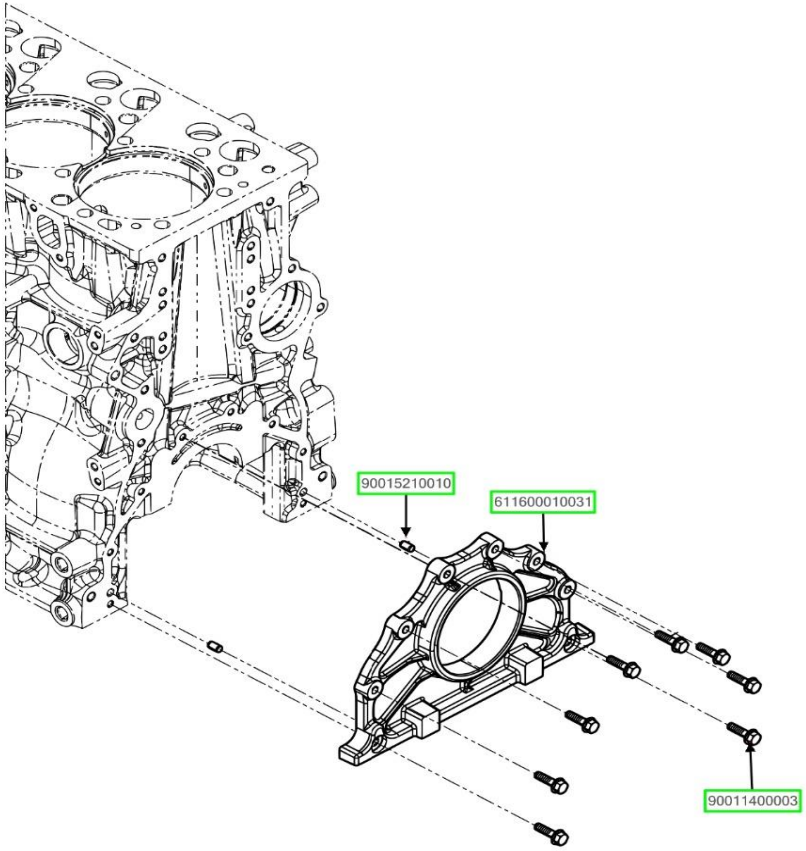


| ASSB_NAME | PART NO. | NAME | QTY |
|---|---|---|---|
| FRONT COVER GROUP | 90015210010 | PARALLEL PIN | 2 |
| | 611600010031 | FRONT CAP | 1 |
| | 90011400003 | HEXAGON FLANGE BOLT | 8 |
| | | | |
| | | | |
| | | | |
| | | | |

| ASSB_NAME | PART NO. | NAME | QTY |
|---|---|---|---|
| FRONT COVER GROUP | | | |
| | | | |
| | | | |
| | | | |
| | | | |
| | | | |
| | | | |

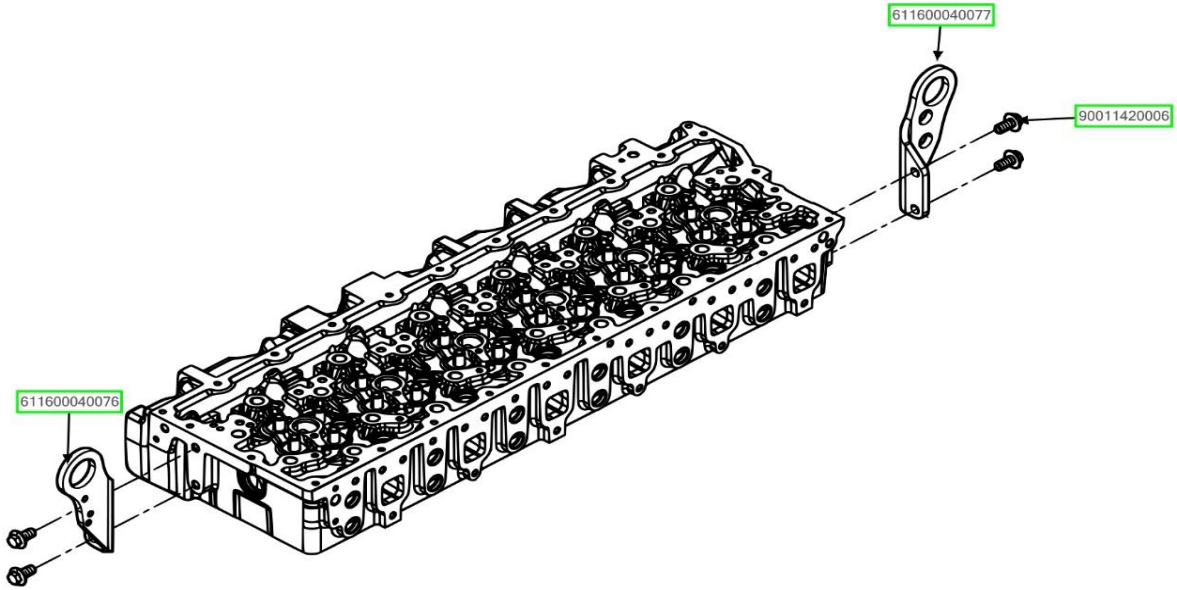


| ASSB_NAME | PART NO. | NAME | QTY |
|---|---|---|---|
| EYE RING GROUP | 90011420006 | HEXAGON FLANGE BOLT | 4 |
| | 611600040077 | ENGINE HANGER PLATE | 1 |
| | 611600040076 | ENGINE HANGER PLATE | 1 |
| | | | |
| | | | |
| | | | |
| | | | |

| ASSB_NAME | PART NO. | NAME | QTY |
|---|---|---|---|
| EYE RING GROUP | | | |
| | | | |
| | | | |
| | | | |
| | | | |
| | | | |
| | | | |

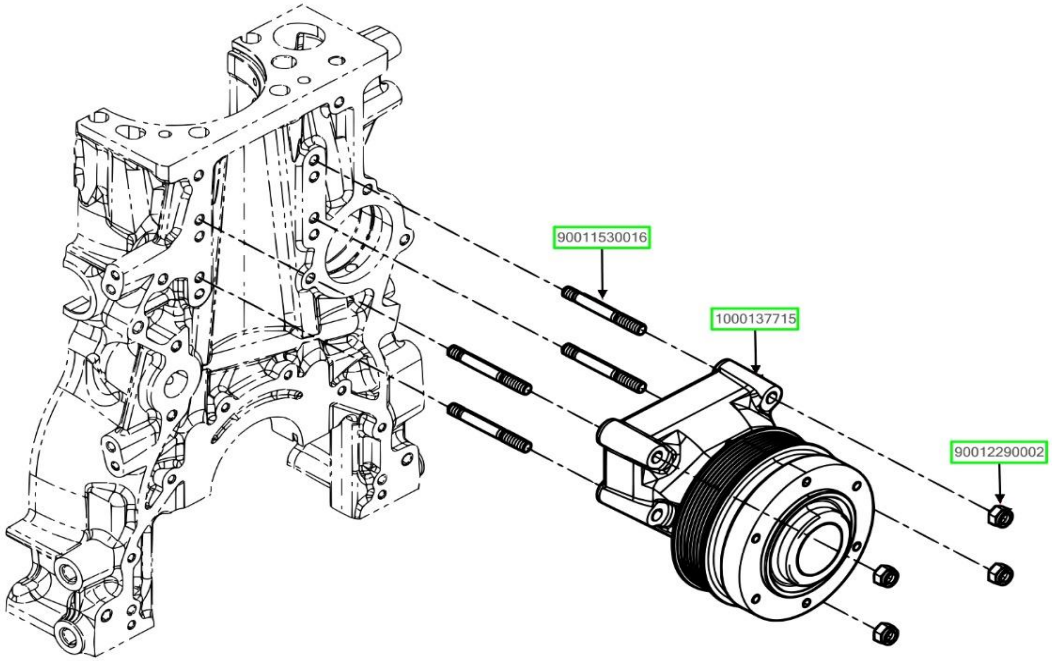


| CODE_ASSB | PART NO. | NAME | QTY |
|---|---|---|---|
| FAN BRACKET GROUP | 90011530016 | DOUBLE END STUD | 4 |
| | 1000137715 | FAN BRACKET ASSEMBLY | 1 |
| | 90012290002 | HEXAGON FLANGE NUT | 4 |
| | | | |
| | | | |
| | | | |
| | | | |

| CODE_ASSB | PART NO. | NAME | QTY |
|---|---|---|---|
| FAN BRACKET GROUP | | | |
| | | | |
| | | | |
| | | | |
| | | | |
| | | | |
| | | | |

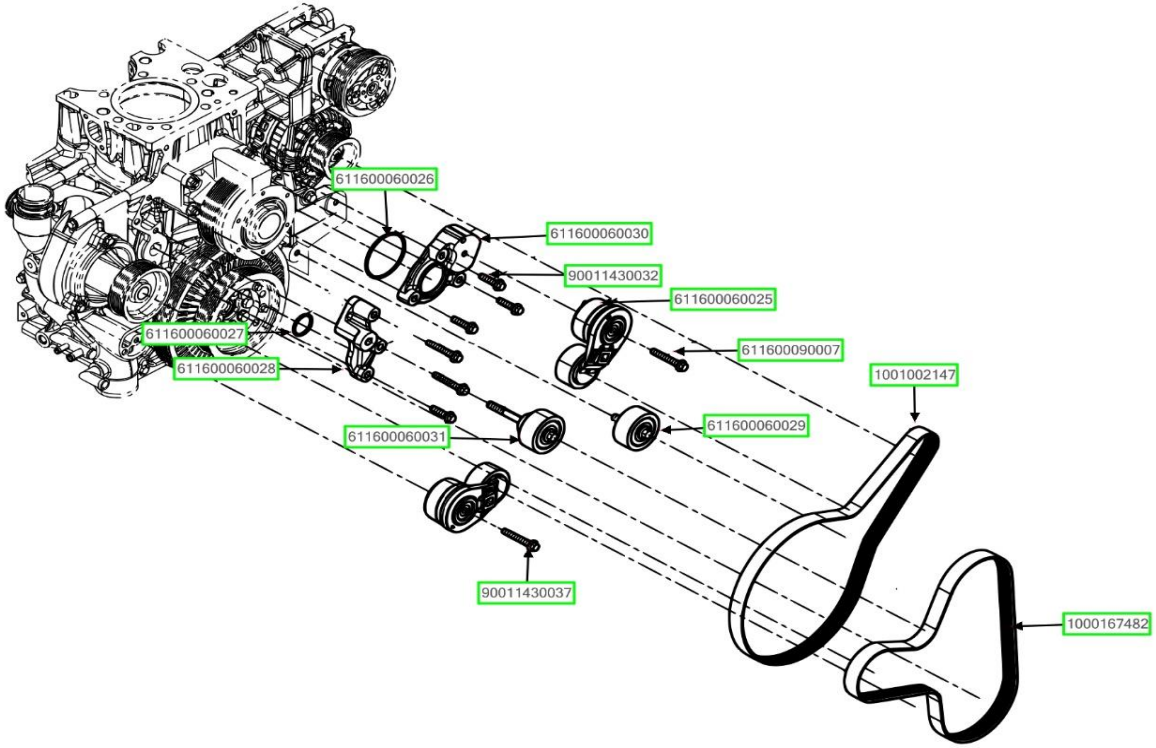


| ASSB_NAME | PART NO. | NAME | QTY |
|---|---|---|---|
| TENSIONER AND BELT GROUP | 611600060026 | O-RING | 1 |
| | 611600060030 | COVER | 1 |
| | 90011430032 | HEXAGON FLANGE WITH TOOTH BOLT | 4 |
| | 611600060025 | TENSIONER | 2 |
| | 611600090007 | HEXAGON FLANGE BOLT | 2 |
| | 1001002147 | POLY V BELT | 1 |
| | 1000167482 | POLY V BELT | 1 |

| ASSB_NAME | PART NO. | NAME | QTY |
|---|---|---|---|
| TENSIONER AND BELT GROUP | 611600060029 | IDLE WHEEL | 1 |
| | 611600060031 | IDLE WHEEL | 1 |
| | 90011430037 | HEXAGON FLANGE WITH TOOTH BOLT | 2 |
| | 611600060028 | BRACKET | 1 |
| | 611600060027 | O-RING | 1 |
| | | | |
| | | | |

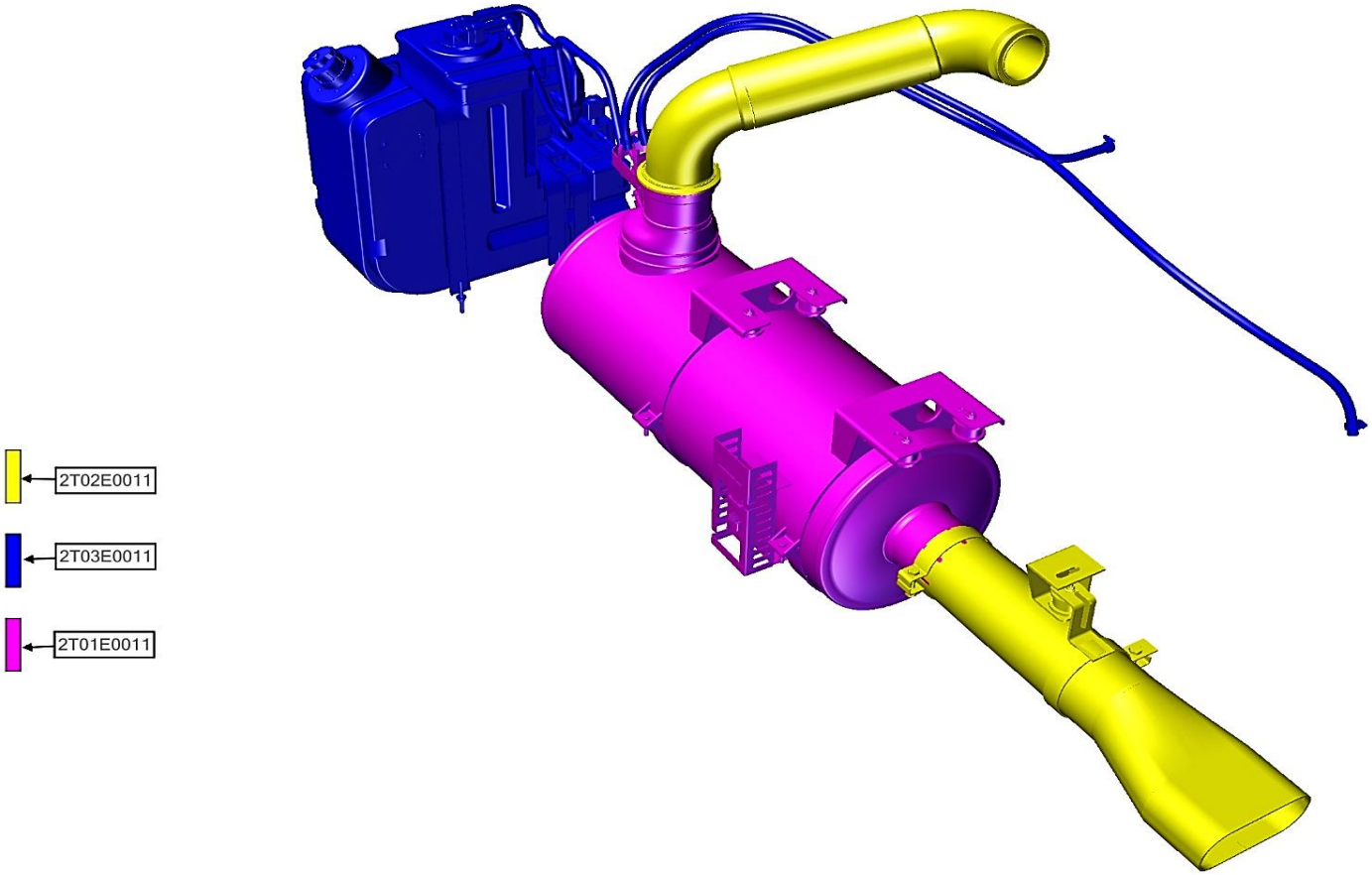


| ASSB_NAME | PART NO. | NAME | QTY |
|---|---|---|---|
| EXHAUST SYSTEM | 2T01E0011 | SCR TANK ASSEMBLY | 1 |
| | 2T02E0011 | EXHAUST PIPE ASSY | 1 |
| | 2T03E0011 | UREA TANK ASSEMBLY | 1 |
| | | | |
| | | | |
| | | | |
| | | | |

| ASSB_NAME | PART NO. | NAME | QTY |
|---|---|---|---|
| EXHAUST SYSTEM | | | |
| | | | |
| | | | |
| | | | |
| | | | |
| | | | |
| | | | |

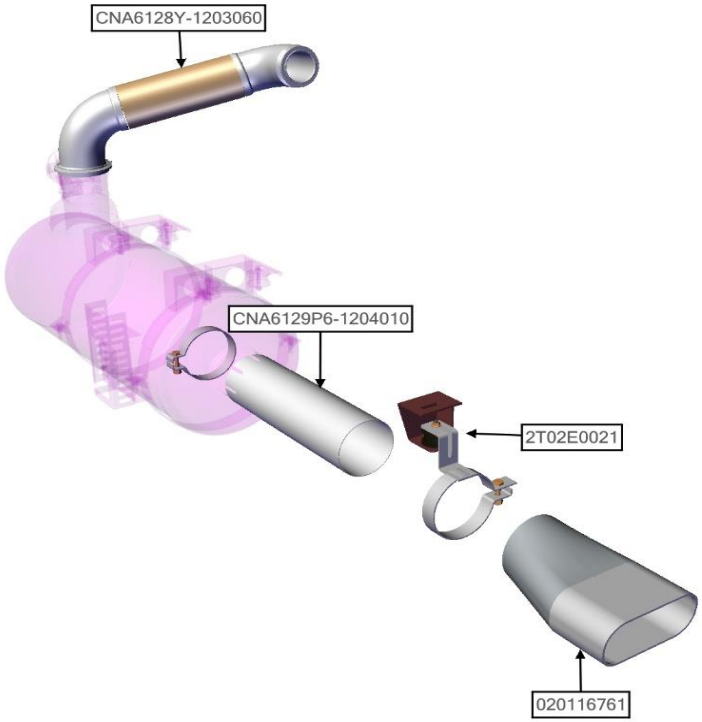


| ASSB_NAME | PART NO. | NAME | QTY |
|---|---|---|---|
| EXHAUST PIPE ASSY | CNA6128Y-1203060 | SPRING PIPE | 1 |
| | 2T02E0021 | TAIL PIPE CLAMP | 1 |
| | 020116761 | TAIL PIPE | 1 |
| | CNA6129P6-1204010 | TAIL PIPE | 1 |
| | | | |
| | | | |
| | | | |

| ASSB_NAME | PART NO. | NAME | QTY |
|---|---|---|---|
| EXHAUST PIPE ASSY | | | |
| | | | |
| | | | |
| | | | |
| | | | |
| | | | |
| | | | |

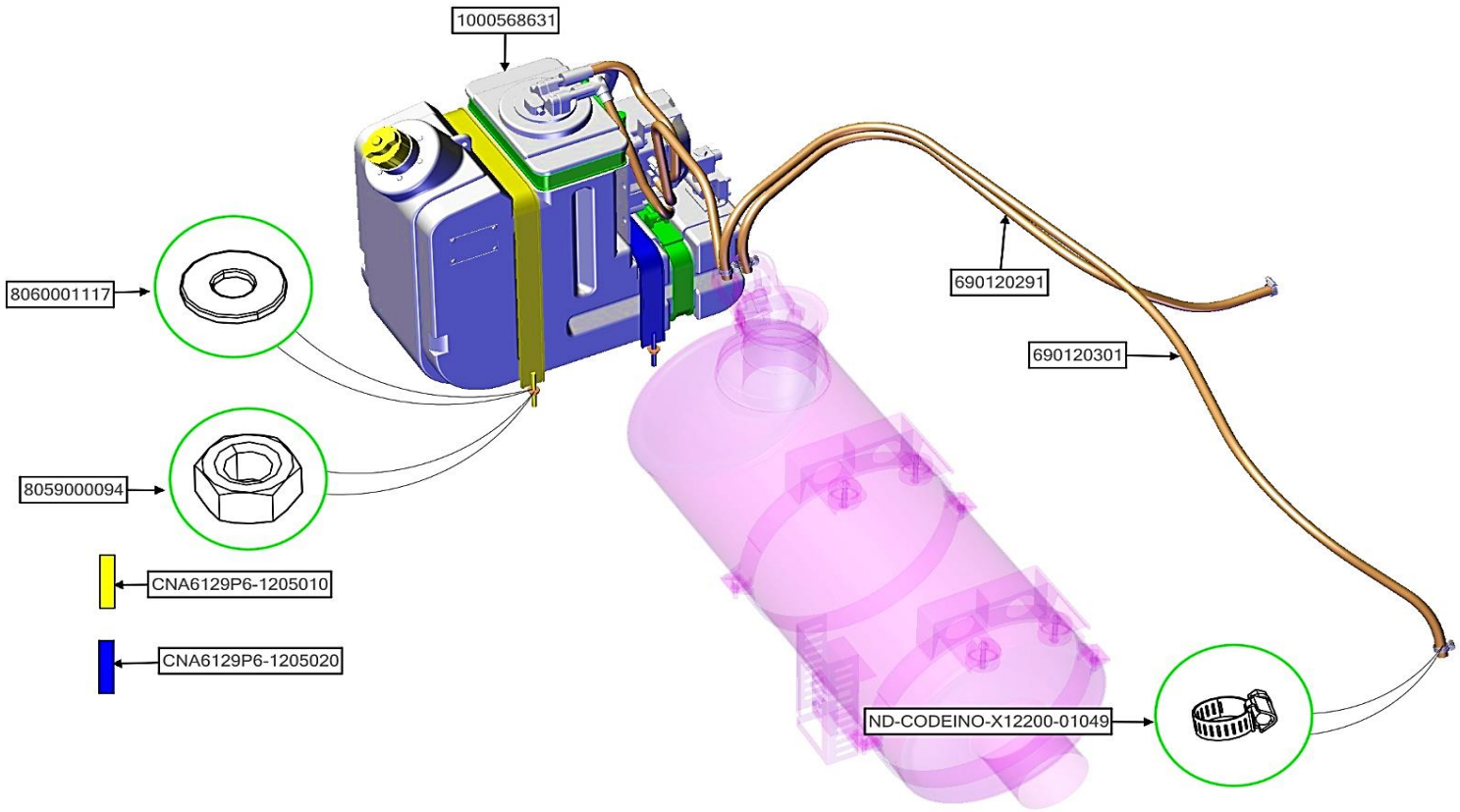


| ASSB_NAME | PART NO. | NAME | QTY |
|---|---|---|---|
| UREA TANK ASSEMBLY | 690120291 | COOLING WATER PIPE 01 | |
| | 690120301 | COOLING WATER PIPE 02 | |
| | 1000568631 | UREA TANK | |
| | 8059000094 | NUT 08125 | |
| | 8060001117 | WASHER Ø08 | |
| | CNA6129P6-1205010 | STRAP,UREA TANK | |
| | CNA6129P6-1205020 | STRAP,UREA TANK SMALL | |

| ASSB_NAME | PART NO. | NAME | QTY |
|---|---|---|---|
| UREA TANK ASSEMBLY | ND-CODEINO-X12200-01049 | STRAP 12-20 | |
| | | | |
| | | | |
| | | | |
| | | | |
| | | | |
| | | | |

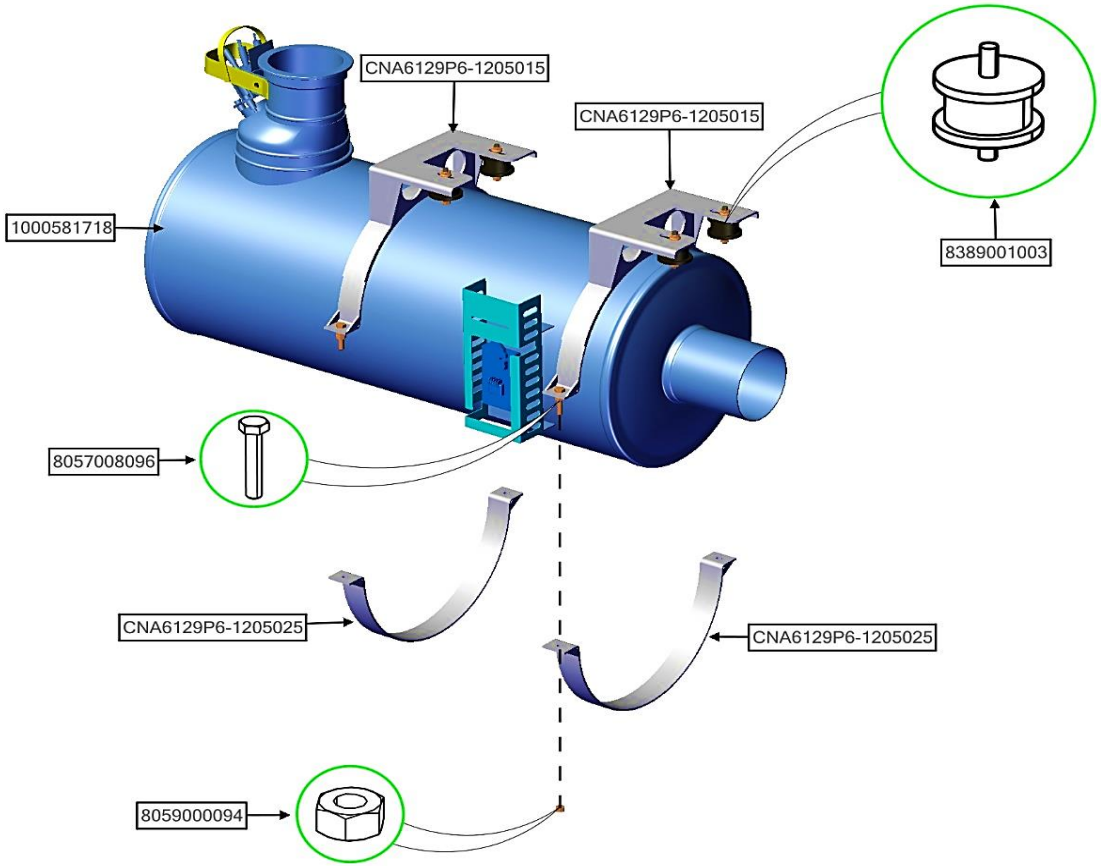


| ASSB_NAME | PART NO. | NAME | QTY |
|---|---|---|---|
| SCR TANK ASSEMBLY | 805900009 | NUT 08125 | 14 |
| | 1000581718 | SCR TANK | 1 |
| | 8057008096 | NUT 08040125 | 4 |
| | 8389001003 | CUSHION | 4 |
| | CNA6129P6-1205015 | STRAP SCR 01 | 2 |
| | CNA6129P6-1205025 | STRAP SCR 02 | 2 |
| | | | |

| ASSB_NAME | PART NO. | NAME | QTY |
|---|---|---|---|
| SCR TANK ASSEMBLY | | | |
| | | | |
| | | | |
| | | | |
| | | | |
| | | | |
| | | | |

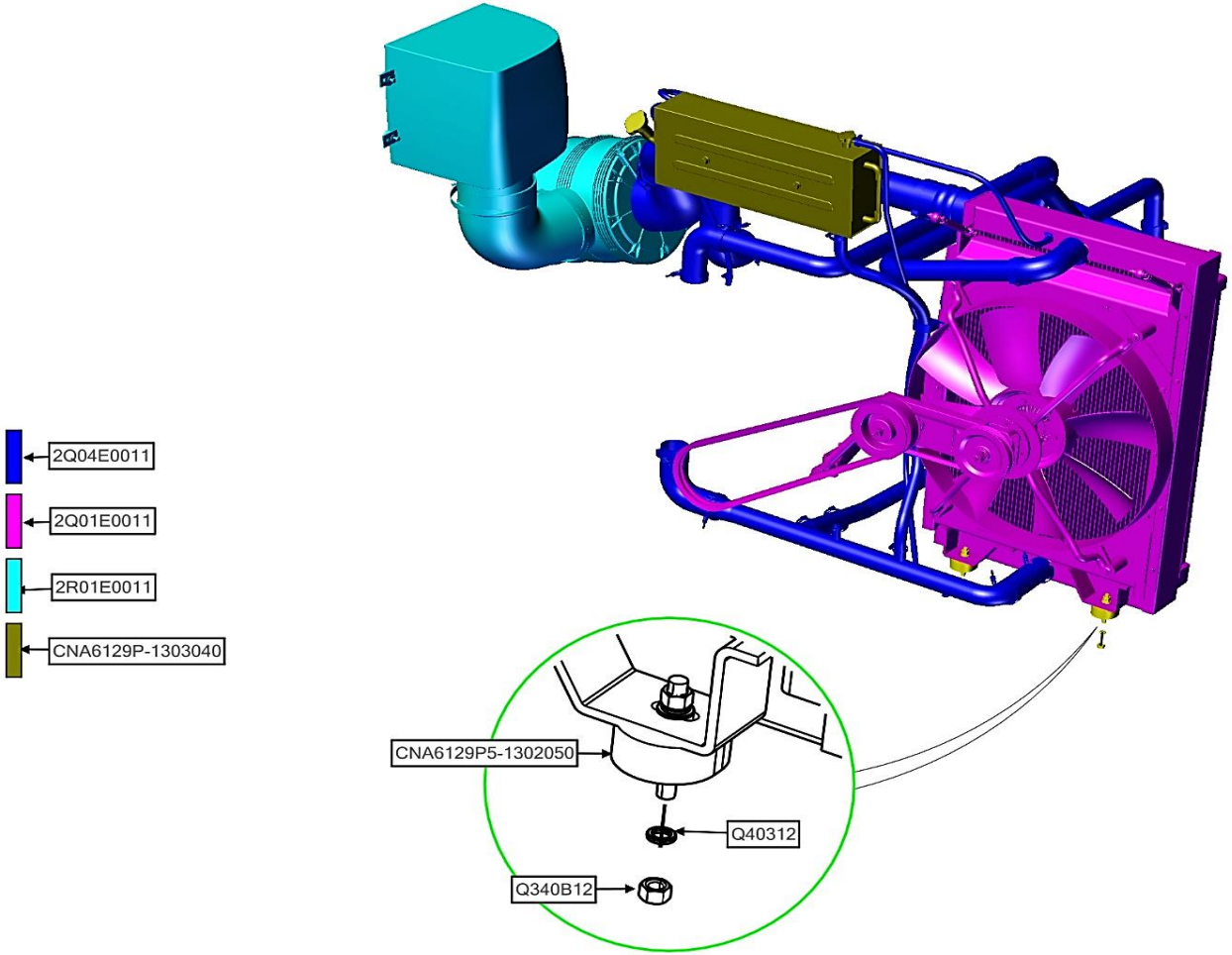


| ASSB_NAME | PART NO. | NAME | QTY |
|---|---|---|---|
| COOLING SYSTEM | 2Q01E0011 | RADIATOR ASSEMBLY | 1 |
| | 2Q04E0011 | COOLING PIPE | 1 |
| | 2R01E0011 | AIR CLEANER ASSY | 1 |
| | CNA6129P-1303040 | RESERVOIR WATER ASSY | 1 |
| | CNA6129P5-1302050 | CUSHION | 2 |
| | Q340B12 | NUT 12175 | 1 |
| | Q40312 | WASHER Ø12 | 1 |

| ASSB_NAME | PART NO. | NAME | QTY |
|---|---|---|---|
| COOLING SYSTEM | | | |
| | | | |
| | | | |
| | | | |
| | | | |
| | | | |
| | | | |

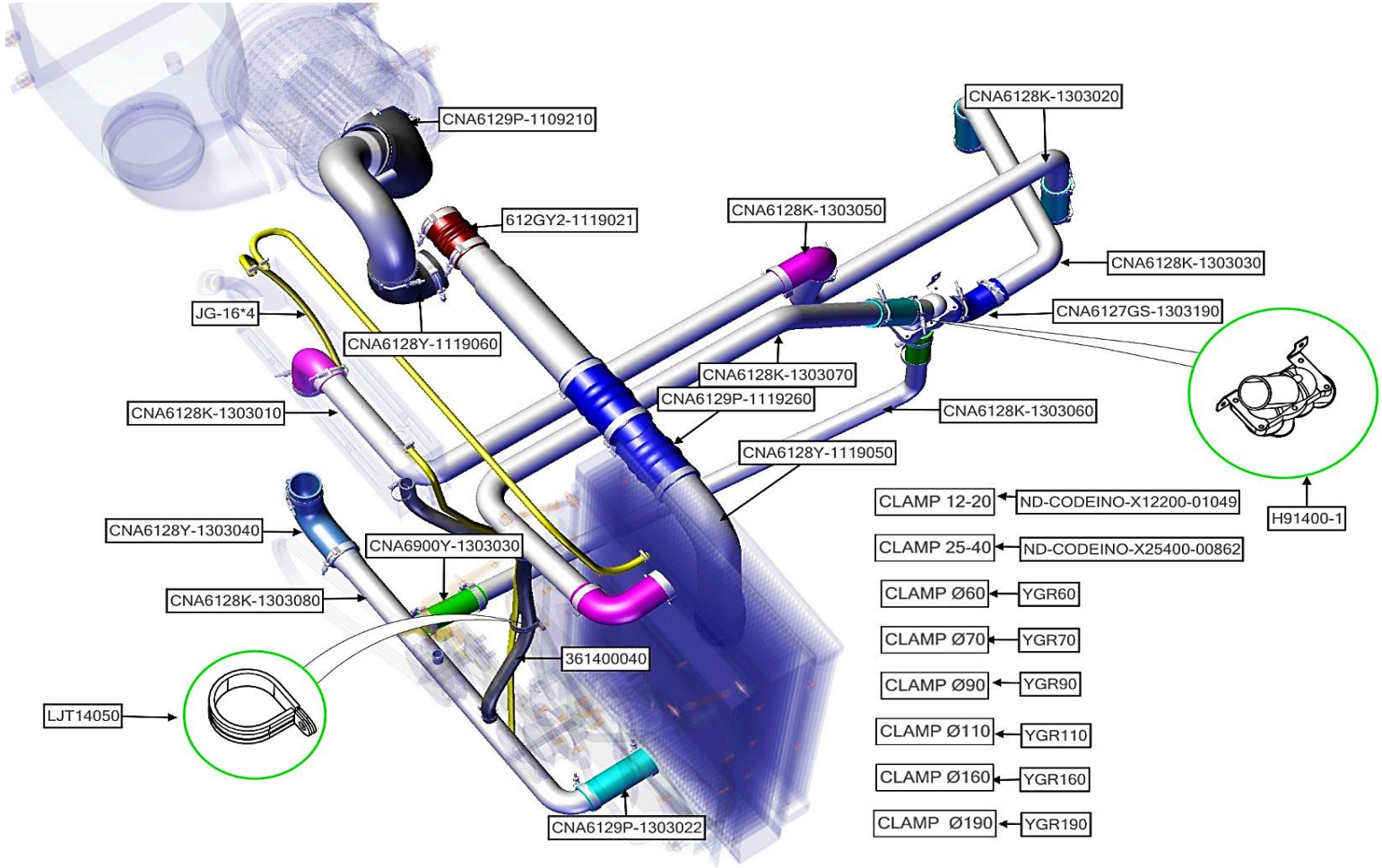


| ASSB_NAME | PART NO. | NAME | QTY |
|---|---|---|---|
| COOLING PIPE | 612GY2-1119021 | HOSE, TURBO OUTLET | 1 |
| | 361400040 | RESERVOIR WATER PIPE | 1 |
| | CNA6127GS-1303190 | HOSE 23 | 1 |
| | CNA6128K-1303010 | WATER PIPE 16 | 1 |
| | CNA6128K-1303020 | WATER PIPE 15 | 1 |
| | CNA6128K-1303030 | WATER PIPE 14 | 1 |
| | CNA6128K-1303050 | HOSE 21 | 3 |

| ASSB_NAME | PART NO. | NAME | QTY |
|---|---|---|---|
| COOLING PIPE | CNA6128K-1303060 | WATER PIPE 13 | 1 |
| | CNA6128K-1303070 | WATER PIPE 17 | 1 |
| | CNA6128K-1303080 | WATER PIPE 12 | 1 |
| | CNA6128Y-1119050 | AIR PIPE 07 | 1 |
| | CNA6128Y-1119060 | HOSE, TURBO INLET | 1 |
| | CNA6128Y-1303040 | HOSE 22 | 1 |
| | CNA6129P-1109210 | HOSE,A/C ASSY OUTLET | 1 |

| ASSB_NAME | PART NO. | NAME | QTY |
|---|---|---|---|
| COOLING PIPE | CNA6129P-1119260 | HOSE 19 | 3 |
| | CNA6129P-1303022 | HOSE 20 | 4 |
| | CNA6900Y-1303030 | HOSE 24 | 2 |
| | H91400-1 | THERMOSTATIC VALVE | 1 |
| | JG-16*4 | A/PIPE,INC OUTLET | 3 |
| | LJT14050 | CLAMP Ø50 | 2 |
| | ND-CODEINO-X12200-01049 | CLAMP 12-20 | 5 |
| | ND-CODEINO-X25400-00862 | CLAMP 25-40 | 2 |
| | YGR60 | CLAMP Ø60 | 4 |
| | YGR70 | CLAMP Ø70 | 16 |
| | YGR90 | CLAMP Ø90 | 2 |
| | YGR110 | CLAMP Ø110 | 8 |
| | YGR160 | CLAMP Ø160 | 1 |
| | YGR190 | CLAMP Ø190 | 1 |

| ASSB_NAME | PART NO. | NAME | QTY |
|---|---|---|---|
| COOLING PIPE | | | |

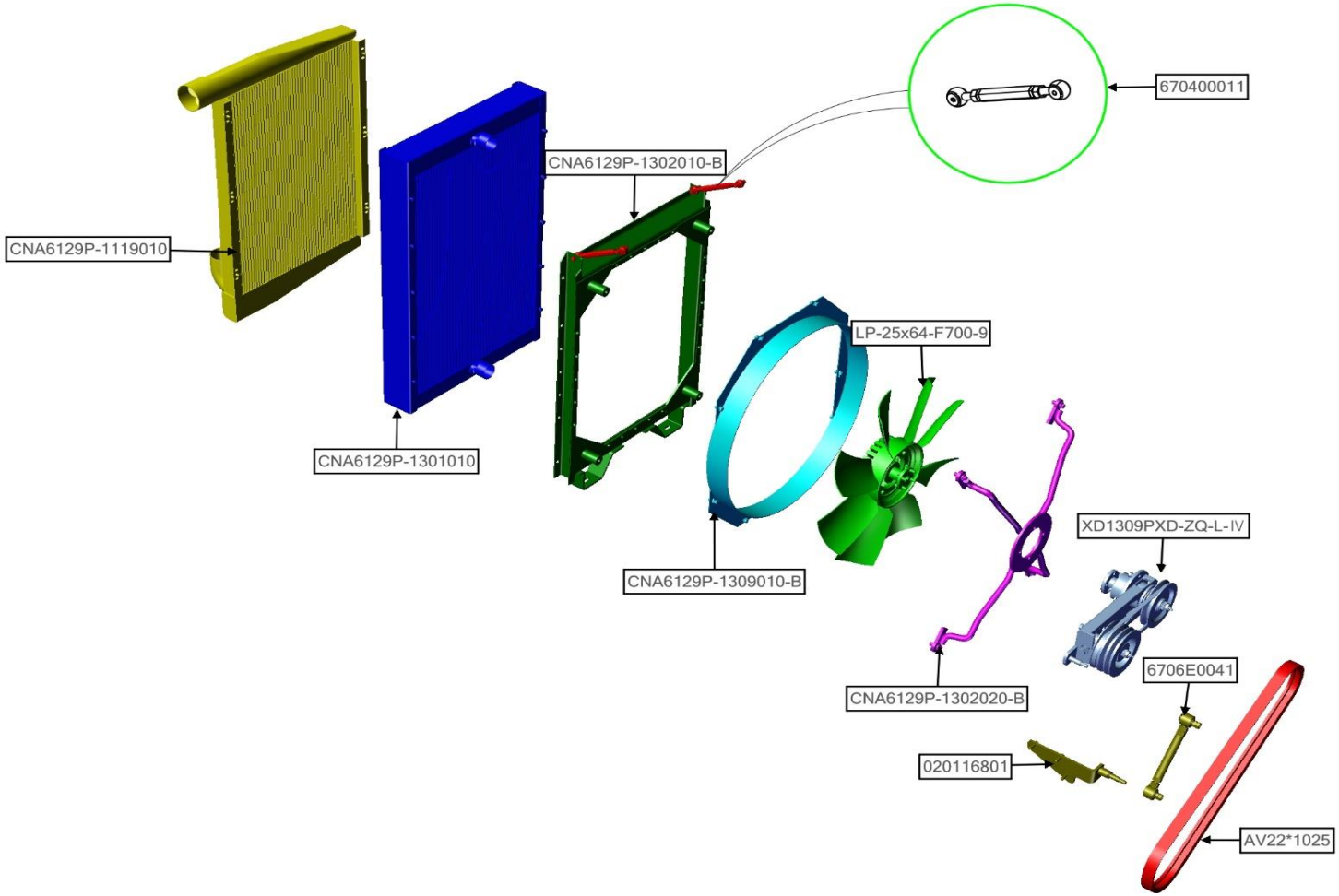


| ASSB_NAME | PART NO. | NAME | QTY |
|---|---|---|---|
| RADIATOR ASSEMBLY | CNA6129P-1302010-B | GUARD,RADIATOR | 1 |
| | AV22*1025 | BELT,COOLING FAN | 1 |
| | XD1309PXD-ZQ-L-Ⅳ | FAN DRIVING ASSY | 1 |
| | CNA6129P-1302030 | TURNBUCKLE,COOLING FAN | 1 |
| | 020116801 | COOLING FAN ADJ ROD | 1 |
| | 670400011 | RADIATOR TURNBUCKLE | 2 |
| | CNA6129P-1119010 | INTERCOOLER | 1 |

| ASSB_NAME | PART NO. | NAME | QTY |
|---|---|---|---|
| RADIATOR ASSEMBLY | CNA6129P-1301010 | RADIATOR | 1 |
| | CNA6129P-1302020-B | SUPPORT,COOLING FAN | 1 |
| | CNA6129P-1309010-B | COWLING,COOLING FAN | 1 |
| | LP-25x64-F700-9 | COOLING FAN | 1 |
| | | | |
| | | | |
| | | | |

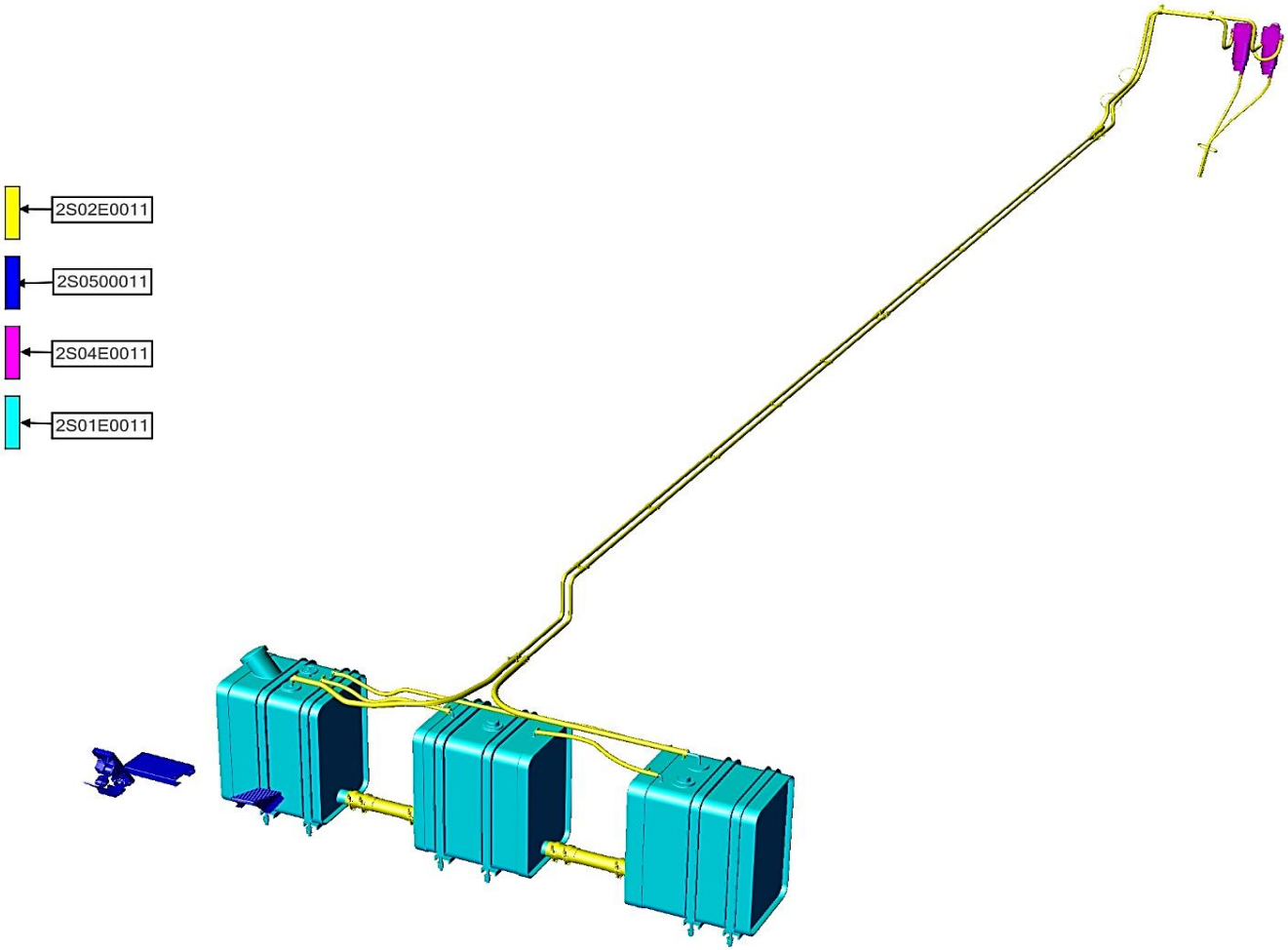


| ASSB_NAME | PART NO. | NAME | QTY |
|---|---|---|---|
| FUEL SYSTEM | 2S01E0011 | FUEL TANK ASSY | 1 |
| | 2S02E0011 | FUEL PIPE ASSY | 1 |
| | 2S04E0011 | FUEL FILTER ASSY | 1 |
| | 2S0500011 | ACCELERATOR ASSEMBLY | 1 |
| | | | |
| | | | |
| | | | |

| ASSB_NAME | PART NO. | NAME | QTY |
|---|---|---|---|
| FUEL SYSTEM | | | |
| | | | |
| | | | |
| | | | |
| | | | |
| | | | |
| | | | |

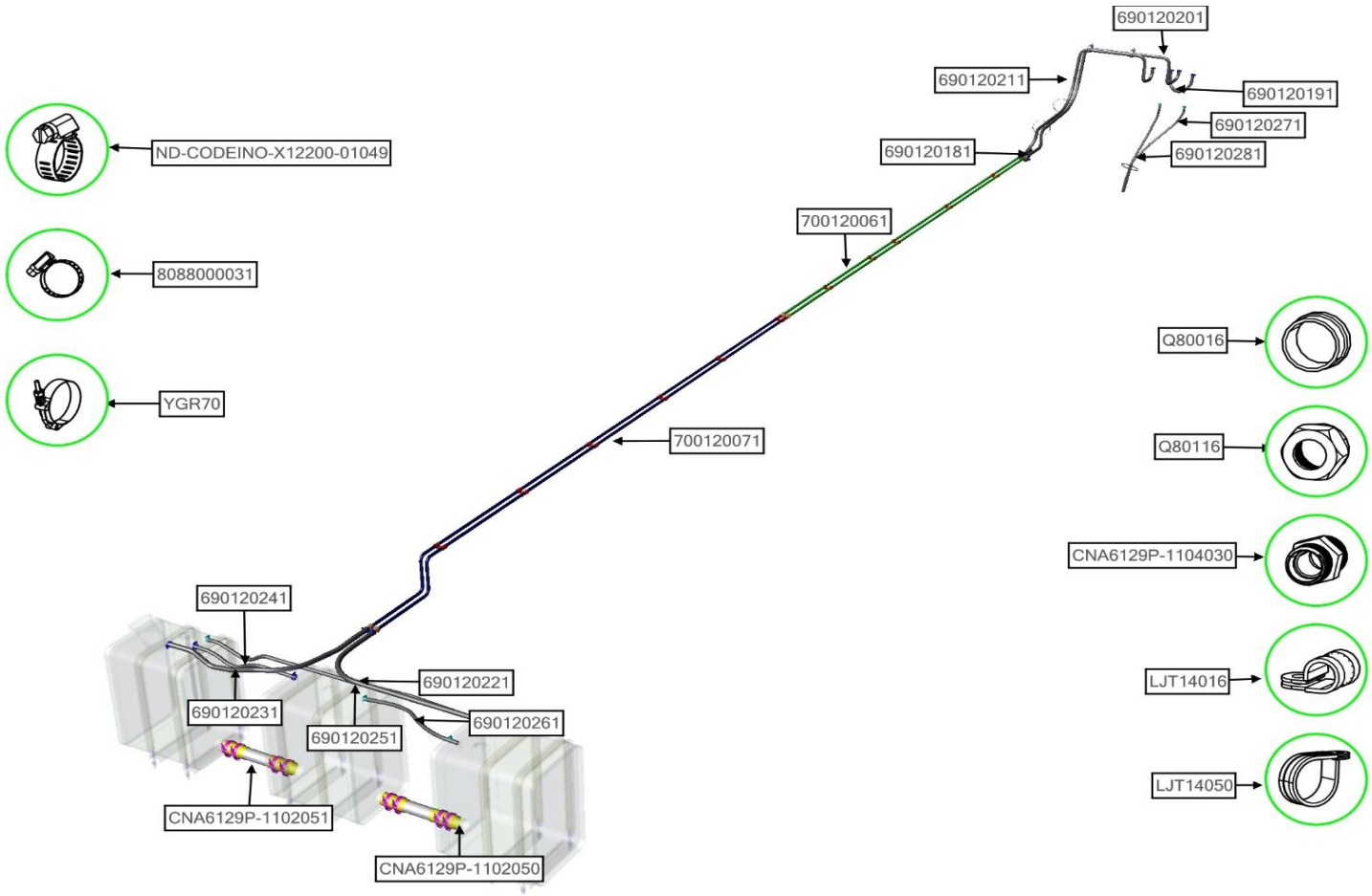


| ASSB_NAME | PART NO. | NAME | QTY |
|---|---|---|---|
| FUEL PIPE ASSY | CNA6129P-1102050 | FUEL HOSE | 4 |
| | 690120181 | FUEL HOSE 01 | 1 |
| | 690120191 | FUEL HOSE 02 | 1 |
| | 690120201 | FUEL HOSE 03 | 1 |
| | 690120211 | FUEL HOSE 04 | 1 |
| | 690120221 | FUEL HOSE 05 | 1 |
| | 690120231 | FUEL HOSE 06 | 1 |

| ASSB_NAME | PART NO. | NAME | QTY |
|---|---|---|---|
| FUEL PIPE ASSY | 690120241 | FUEL HOSE 07 | 1 |
| | 690120251 | FUEL HOSE 08 | 1 |
| | 690120261 | FUEL HOSE 09 | 1 |
| | 690120271 | FUEL EXHAUST PIPE 01 | 1 |
| | 690120281 | FUEL EXHAUST PIPE 02 | 1 |
| | 700120061 | FUEL PIPE 01 | 2 |
| | 700120071 | FUEL PIPE 02 | 2 |

| ASSB_NAME | PART NO. | NAME | QTY |
|---|---|---|---|
| FUEL PIPE ASSY | 8088000031 | CLAMP 16-27 | 14 |
| | CNA6129P-1102051 | INOX PIPE | 2 |
| | CNA6129P-1104030 | FUEL HOSE | 1 |
| | LJT14016 | CLAMP Ø16 | 22 |
| | LJT14050 | CLAMP Ø50 | 2 |
| | ND-CODEINO-X12200-01049 | CLAMP 12-20 | 6 |
| | Q80016 | CONNECTOR Ø16 | 1 |
| | Q80116 | CONNECTOR NUT M22 | 1 |
| | Q80316 | STRAIGHT CONNECTOR M22-M22 | 1 |
| | YGR70 | CLAMP Ø70 | 8 |

| ASSB_NAME | PART NO. | NAME | QTY |
|---|---|---|---|
| FUEL PIPE ASSY | | | |

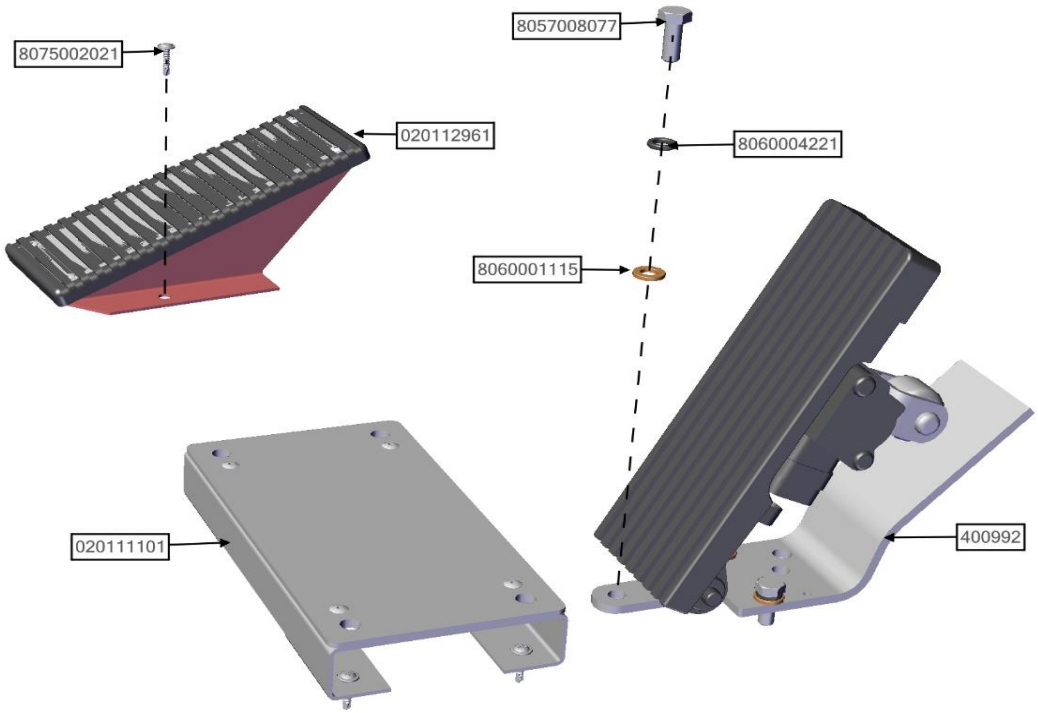


| ASSB_NAME | PART NO. | NAME | QTY |
|---|---|---|---|
| ACCELERATOR ASSEMBLY | 400992 | ACCELERATOR | 1 |
| | 20111101 | ACCELERATOR BRACKET | 1 |
| | 20112961 | ACCELERATOR BRACKET | 1 |
| | 8057008077 | BOLT 08020125 | 1 |
| | 8060001115 | WASHER Ø08 | 1 |
| | 8060004221 | WASHER Ø08 | 1 |
| | 8075002021 | SCREW 0420 | 1 |

| ASSB_NAME | PART NO. | NAME | QTY |
|---|---|---|---|
| ACCELERATOR ASSEMBLY | | | |
| | | | |
| | | | |
| | | | |
| | | | |
| | | | |
| | | | |

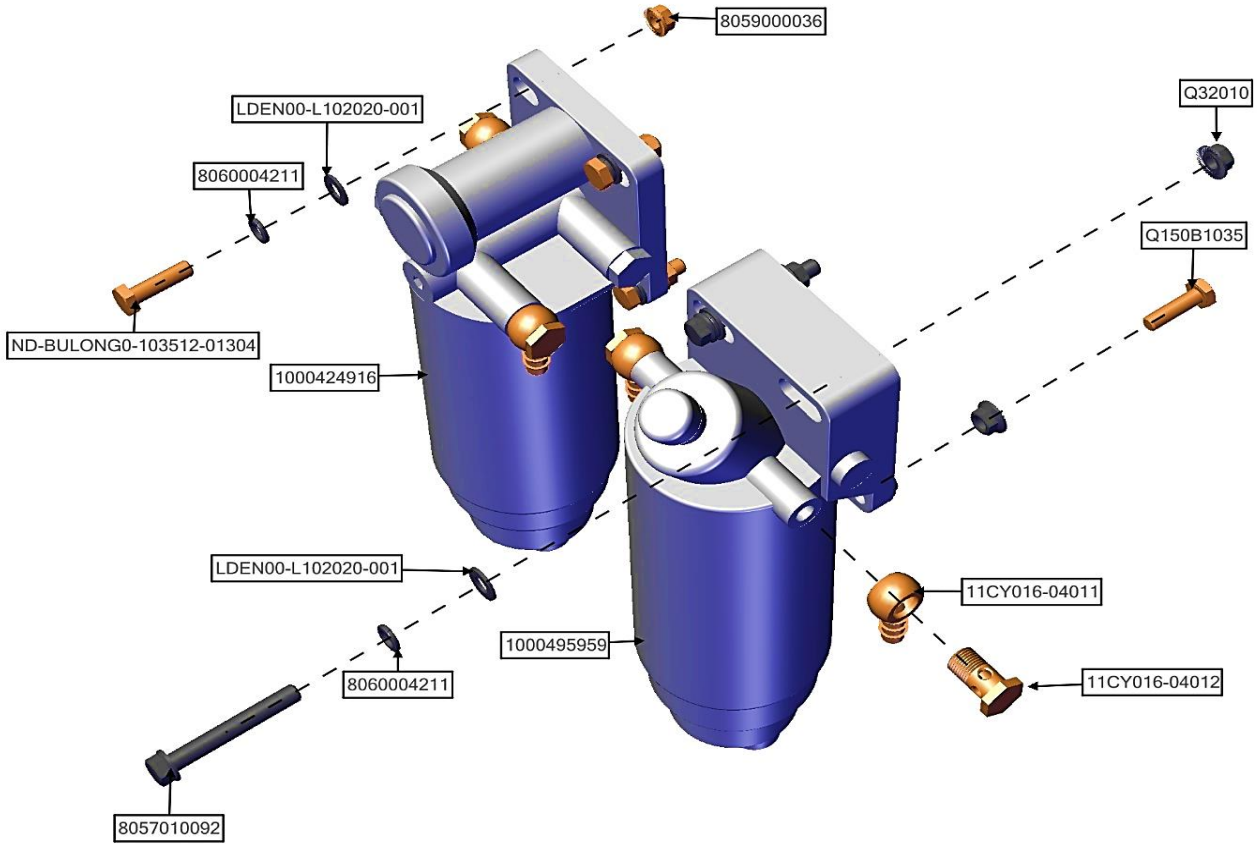


| ASSB_NAME | PART NO. | NAME | QTY |
|---|---|---|---|
| FUEL FILTER ASSY | 11CY016-04011 | CONNECTOR Ø16 | 4 |
| | 11CY016-04012 | BOLT M16 | 4 |
| | 1000424916 | FUEL FILTER 01 | 1 |
| | 1000495959 | FUEL FILTER 02 | 1 |
| | 8057010092 | BOLT 10070150 | 2 |
| | 8059000036 | NUT 10125 | 4 |
| | 8060004211 | WASHER Ø10 | 4 |

| ASSB_NAME | PART NO. | NAME | QTY |
|---|---|---|---|
| FUEL FILTER ASSY | 8060004211 | WASHER Ø10 | 4 |
| | LDEN00-L102020-001 | WASHER Ø10 | 4 |
| | LDEN00-L102020-001 | WASHER Ø10 | 4 |
| | ND-BULONG0-103512-01304 | BOLT 10035125 | 4 |
| | Q150B1035 | BOLT 10035150 | 2 |
| | Q32010 | NUT 10150 | 4 |
| | | | |

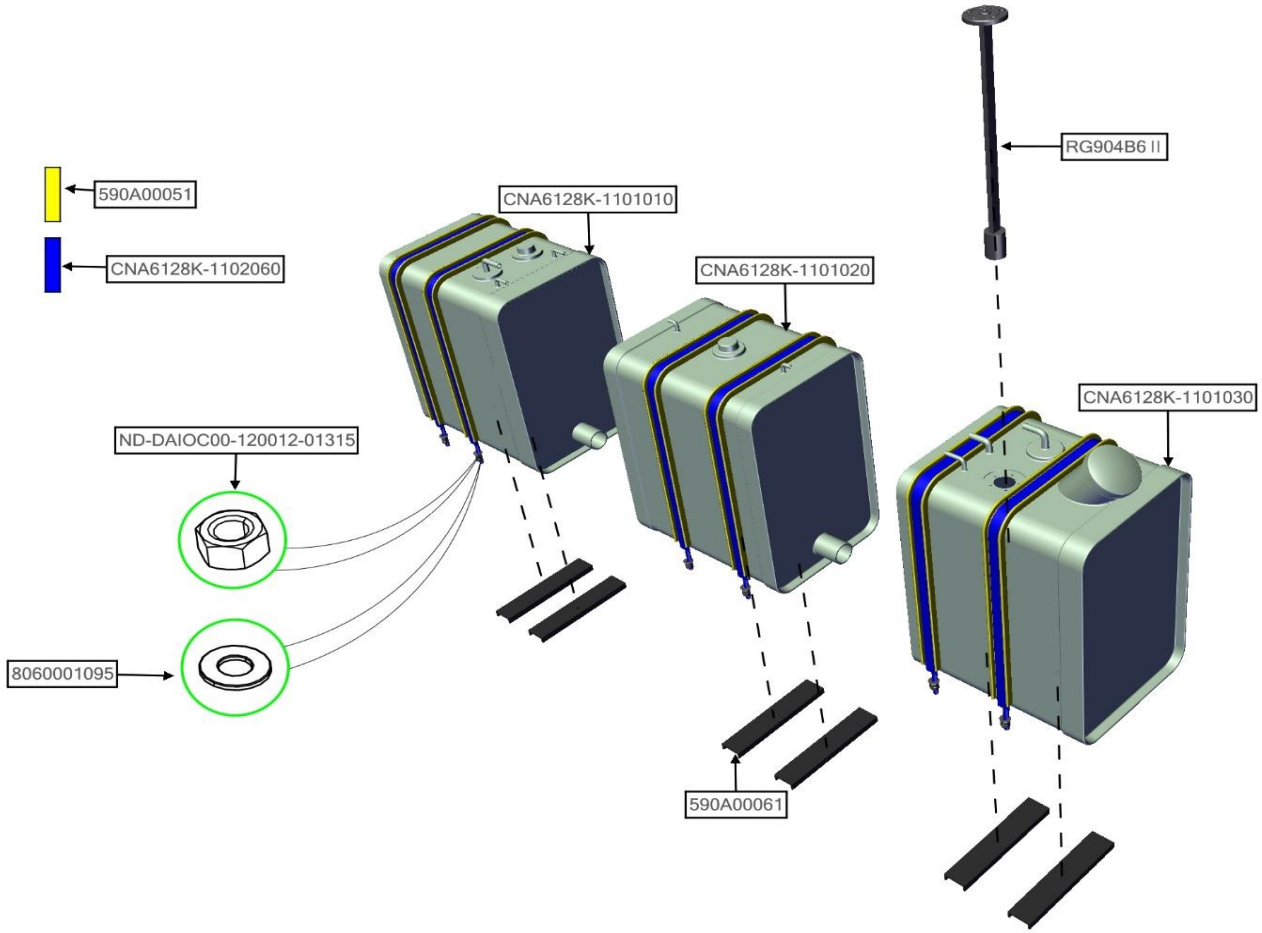


| ASSB_NAME | PART NO. | NAME | QTY |
|---|---|---|---|
| FUEL TANK SASSY | CNA6128K-1101030 | FUEL TANK 03 | 1 |
| | CNA6128K-1101020 | FUEL TANK 02 | 1 |
| | CNA6128K-1101010 | FUEL TANK 01 | 1 |
| | 590A00051 | RUBBER | 6 |
| | 590A00061 | RUBBER | 6 |
| | 8060001095 | WASHER Ø12 | 12 |
| | CNA6128K-1102060 | STRAP | 6 |

| ASSB_NAME | PART NO. | NAME | QTY |
|---|---|---|---|
| FUEL TANK SASSY | ND-DAIOC00-120012-01315 | NUT 12125 | 24 |
| | RG904B6 Ⅱ | FUEL SENSOR | 1 |
| | | | |
| | | | |
| | | | |
| | | | |
| | | | |