TABLE OF CONTENTS

EXTERIOR 01
GLASS ASSY 02
GLASS SIDE ASSY 03
WND GLASS 05
FRONT 06
FRONT BUMPER ASSY 07
FRONT MIDDLE BUMPER 08
BUMMER ASSY-FR,CORNER,RH 09
BUMMER ASSY-FR,CORNER,LH 10
HINGE ASSY 11
LAMP FRONT - ASSY 12
LAMP RH FRONT 13
LAMP LH FRONT 15
WINDSHIELD WIPER - ASSY 17
MIRROR ASSY - OUTSIDE 18
SPOILER ASSY 19
FRONT SPOLIER - ASSY - RH 20
FRONT SPOLIER - ASSY - LH 21
FRONT SPOLIER - ASSY 22
FRONT MIDDLE PANEL - ASSY 23
REAR 24
BUMMER ASSY 25
LAMP REAR-ASSY 26
LAMP REAR RH ASSY 27
LAMP REAR LH ASSY 28
REAR SPOLIER ASSY 29
REAR MIDDLE PANEL-ASSY 30
SIDE BUS 31

INTERIOR 32
WIND DUCT ASSY 33
CURTAIN ASSY 34
SUNVISOR ASSY 35
SIDE CURTAIN ASSY 36
REAR CURTAIN ASSY 37

HANDRAIL ASSY 38
LUGGAGE SHELVES ASSY 39
DASHBOARD ASSY 40
CLOCK DASHBOARD BORDER 41
MECHANICAL COMPONENT SET 42
SWITCH SUPPORT ASSY 43
SWITCHES ASSY 44
DASHBOARD ASSY 46
SUB-DASHBOARD DASHBOARD 47
PARTITION ASSY 48
MINOR ITEMS 49
SEATS 50
RH DOUBLE SEATS 51
LH DOUBLE SEATS 01 52
LUGGAGE COMPARTMENT 53
SAFETY SYSTEM 54
SIDE BODY 55
RH SIDE BODY 56
LH SIDE BODY 58
FLOOR ASSY 60
HATCHES ASSY 61
FLOOR MOULDING ASSY 62
FLOOR MOULDING COVER ASSY 63
SEAT RAIL ASSY 64
FLOORING BOARD ASSY 65
STAIRS COVER 66
FUNCTIONAL SYSTEM 67
CEILING 68
FRONT HEADLINING ASSY 69
REAR HEADLINING ASSY 71
MIDDLE CEILING 72
CEILING BOARD ASSY 73
BODY 74
FLAP ASSY 75
REAR FLAP ASSY 76
LUGGAGE FLAP ASSY 78

LUGGAGE FLAP LEVER ARM ASSY 79
STOPPER ASSY 80
FLAP TURNBUCKLE ASSY 81
LUGGAGE FLAP 82
LOCK ASSY 83
LINK ASSY 84
LIFTER ASSY 85
GRID FLAP 86
RH GRID FLAP 87
LH GRID FLAP 88
REAR FENDER FLAP ASSY 89
RH REAR FENDER FLAP 90
LH REAR FENDER FLAP 91
FRONT FENDER FLAP ASSY 92
FRONT FENDER FLAP 93
FRONT FENDER FLAP 94
DOOR ASSY 95
PASSENGER DOOR ASSY 96
STOPPER ASSY 97
PASSENGER DOOR TURNBUCKLE ASSY 98
WEATHERSTRIP 99
PASSENGER DOOR PUMB PILLAR ASSY 100
FRONT FRAME ASSY 102
CONNECTING ITEM 103
FRONT FRAME 105
DASHBOARD FRAME 107
REAR FRAME ASSY 108
CONNECTIVE ITEM 109
REAR FRAME 110
SIDE FRAME ASSY 112
RH SIDE FRAME ASSY 113
CONNECTIVE ITEM 114
RH SIDE FRAME 116
LH SIDE FRAME ASSY 118
CONNECTING ITEM 119
LH SIDE FRAME 121
ROOF FRAME ASSY 123
CONNECTIVE ITEM 124
ROOF FRAME 125
FLOOR FRAME ASSY 127

STAIRS FRAME ASSY 128
CABIN FLOOR FRAME ASSY 130
MAIN FLOOR FRAME ASSY 132
ENGINE FLOOR FRAME ASSY 134
COMPLETED STEEL SHEET 135
BATTERY COVER ASSY 136
SCR TANK COVER ASSY 137
LUGGAGE COMPARTMENTS TOLE ASSY 138
RADIATOR STEEL SHEET ASSY 139
ELECTRICAL CABINET STEEL SHEET ASSY 140
OIL TANK STEEL SHEET ASSY 141

ELECTRICAL SYSTEM 142
CONDUCTOR WIRE SYSTEM 143
A/C ELECTRICAL HARNESS 144
A/C LAMP WIRE 145
REAR ELECTRICAL HARNESS 146
CHASSIS ELECTRICAL HARNESS 148
BATTERY WIRE 149
CHASSIS WIRE 150
HEADLINING ELECTRICAL HARNESS 151
INTERGRATION ELECTRICAL HARNESS 152
SPOILER ELECTRICAL HARNESS 153
DASHBOARD ELECTRICAL HARNESS 154
LEFT SWITCH WIRE 155
INTERGRATED DASHBOARD WIRE 156
ELECTRICAL DEVICE 157
SAFETY AND CONVENIENCE SYSTEM 158
TRANSFORMER ASSY 159
SENSOR ASSY 160
FUSE AND RELAY 161
SWITCHS 162
SIGNAL PROCESSOR 163
HORN 164
BATTERY ASSY 165
SOUND AND IMAGE SYSTEM 166

BARE CHASSSIS 168
CHASSIS FUNCTION SYSTEM 169

AIR COMPRESION SYSTEM 170
SENSOR 171
AIR TANK ASSY 172
DRYER ASSY 174
WATER EXHAUST TANK ASSY 175
PURGE TANK ASSY 176
AIR PIPING 177
CONNECTOR SYSTEM 178
AIR VALVE 180
PARKING BRAKE SHAFT ASSY 181
ABS VALVE ASSY 182
ASR VAVLE ASSY 183
DISTRIBUTOR VALVE ASSY 184
REAR DISTRIBUTOR VALVE ASSY 185
FRONT DISTRIBUTOR VALVE ASSY 186
EXHAUST VALVE ASSY 187
DRIVER DOOR EMERGENCY VALVE ASSY 188
EMERGENCY VALVE ASSY 189
CHECK VALVE ASSY 190
TOTAL CHECK VALVE ASSY 191
AIR SUSPENSION LEVELING VALVE ASSY 192
CONTROLING VALVE ASSY 193
SPRAYING VALVE ASSY 194
STEERING SYSTEM 195
STEERING DRIVE ASSY 196
STEERING ARM ASSY 197
STEERING BOX ASSY 198
STEERING SHAFT ASSY 199
STEERING SHAFT 200
STEERING SUPPORT PIPE ASSY 201
CONNECTOR SYSTEM 202
REAR SUSPENSION SYSTEM 203
REAR AXLE MOUNTING ASSY 204
VERTICAL BALANCE BAR MOUNTING ASSY 205
REAR AIRBAG ASSY 206
REAR SHOCK OBSORBER ASSY 207
VERTICAL BALANCE BAR ASSY 01 208
VERTICAL BALANCE BAR ASSY 02 209
REAR BALANCE BAR ASSY 210
FRONT SUSPENSION SYSTEM 211
FRONT DAMPING TWEEZRS 212
FRONT AIR BAG 213
AIR BAG MOUNTING ASSY 214
HORIZONTAL BALANCE BAR ASSY 215

FRONT BALANCE BAR ASSY 216
FRONT BALANCE BAR ASSY 217
AIR CONDITIONING SYSTEM 218
GAS PIPE SYSTEM 219
GAS COMPRESION ASSY 220
GLASS HEATING SYSTEM 221
POWERTRAIN 223
WHEEL ASSR 224
CONNECTING COMPONENTS 225
CLUTCH 226
HYDRAULIC PIPE ASSY 227
CLUTCH PEDAL ASSY 228
CONNECTOR SYSTEM 229
MAIN CLUTCH 230
THE POWER CLUTCH 231
GEAR BOX ASSY 232
CLUTCH 233
ONE-AXIS ASSEMBLY 234
INTERMEDIATE SHAFT ASSEMBLY 235
CLUTCH HOUSING ASSEMBLY 236
TRANSMISSION HOUSING ASSEMBLY 237
REVERSE INTERMEDIATE SHAFT ASSEMBLY 238
BACK COVER ASSEMBLY 239
DOUBLE LEVER LEFT OPERATING DEVICE ASSEMBLY 241
SHIFT CABLE ASSY 247
ENGINE RUBBER MOUNTING ASSY 248
CONTROLLING UNIT ASSY 249
SELECT CABLE ASSY 250
PROPELLER ASSY 251
DIESEL ENGINE ASSY 252
ENGINE 253
MINOR ITEMS 254
EYE RING GROUP 255
TENSIONER AND BELT GROUP 256
ENGINE BRACKET GROUP 257
PARTS BOX GROUP 258
EXHAUST SYSTEM 260
DELIVERY PARTS GROUP ATTACHED TO ENGINE 263
SCR BOX ASSEMBLY 264
INTEGRATED UREA TANK ASSEMBLY 261
UREA TANK ASSEMBLY 262
ELECTRICAL GENERATOR ASSY 266

ALTERNATOR GROUP 267
ALTERNATOR BRACKET GROUP 268
TURBO SYSTEM 269
TURBO CHARGER GROUP 270
TURBOCHARGER OIL PIPE GROUP 271
COMPRESSOR PIPE GROUP 272
REAR EXHAUST MANIFOLD GROUP 273
ENGINE ASSY 274
FLYWHEEL ASSY 275
FLYWHEEL HOUSING GROUP 276
GEAR HOUSING GROUP 277
FLYWHEEL GROUP 278
FLYWHEEL ASSEMBLY 279
TRANSMISSTION SYSTEM 280
CRANKSHAFT GROUP 281
CRANKSHAFT SUBASSEMBLY 282
PISTON AND CONNECTING ROD GROUP 283
PISTON RING SET 284
CONNECTING ROD ASSEMBLY 285
CAMSHAFT ASSEMBLY 286
GEAR DRIVE GROUP 287
IDLER GEAR ASSEMBLY 288
IDLER GEAR ASSEMBLY 01 289
IDLER GEAR SET 290
SECOND ORDER BALANCE MECHANISM GROUP 291
SECONDARY BALANCE MACHANISM 292
BALANCE SHAFT UNIT HOUSING SET 293
SECONDARY BALANCE MACHANISM DRIVEN GEAR SET 294
CRANKSHAFT PULLEY GROUP 295
GREASE SYSTEM 296
OIL SEAL GROUP 297
OIL PAN GROUP 298
OIL DRAIN PLUG 299
OIL DIPSTICK GROUP 300
OIL PUMP GROUP 301
OIL STRAINER GROUP 302
OIL FILTER GROUP 303
OIL COOLERAND FILTER ASSEMBLY 304
ELECTRIC AND SENSOR SYSTEM 306
ELECTRONIC CONTROL UNIT GROUP 307
ELECTRONIC CONTROL SYSTEM HARNESS GROUP 308
COOLING SYSTEM 309
WATER PUMP GROUP 310
WATER PUMP INLET PIPE GROUP 311
WATER OUTLET PIPE GROUP 312
THERMOSTAT GROUP 314
FAN BRACKET GROUP 315
INTAKE - EXHAUST SYSTEM 316
INTAKE MANIFOLD GROUP 317
EXHAUST MANIFOLD GROUP 318
EXHAUST MANIFOLD HEAT SHIELD ASSEMBLY 319
FUEL SYSTEM 320

OIL CAP 321
FUEL INJECTION PUMP GROUP 322
FUEL INJECTION PUMP OIL PIPE GROUP 323
FUEL INJECTOR GROUP 324
FUEL INJECTOR 325
LOW PRESSURE FUEL PIPE GROUP 326
HIGH PRESSURE FUEL PIPE GROUP 326
HIGH PRESSURE FUEL PIPE ASSEMBLY 327
COMMON RAIL GROUP 328
PACKING BOX CHASSIS PARTS GROUP 329
FUEL SYSTEM PROTECTOR 330
VALVE SYSTEM 331
VALVE TRAIN GROUP 332
INTEGRATED ROCKER ARM SHAFT ASSEMBLY 334
INTAKE ROCKER ARM SET 335
EXHAUST ROCKER ARM SET 336
ENGINE CYLINDER 337
ENGINE BLOCK GROUP 338
CRANKCASE ASSEMBLY 339
CRANKCASE PRE-ASSEMBLY 340
SPRAY NOZZLE GROUP 341
MAIN BEARING GROUP 342
THRUST PLATE GROUP 343
CYLINDER HEAD GROUP 344
CYLINDER HEAD ASSEMBLY 345
CYLINDER HEAD SUBASSEMBLY 346
CYLINDER HEAD COVER GROUP 347
STARTING MOTOR 348
AIR COMPRESSOR 349
AIR COMPRESSOR GROUP 350
AIR COMPRESSOR ASSEMBLY 351
MINOR ITEMS 352
EXHAUST AIR SYSTEM 353
EXHAUST PIPE ASSY 354
SCR TANK ASSY 355
COOLING SYSTEM 356
RADIATOR FRAME ASSY 357
COOLING PIPE ASSY 358
RADIATORS ASSY 360
AIR FILTER ASSY 361
EXPANDING WATER TANK ASSY 362
SILENT TANK ASSY 363
FUEL SYSTEM 364
FUEL PIPE ASSY 365
ACCELABRATOR PEDAL ASSY 367
FUEL MANUAL PUMP ASSY 368
FUEL TANK ASSY 369

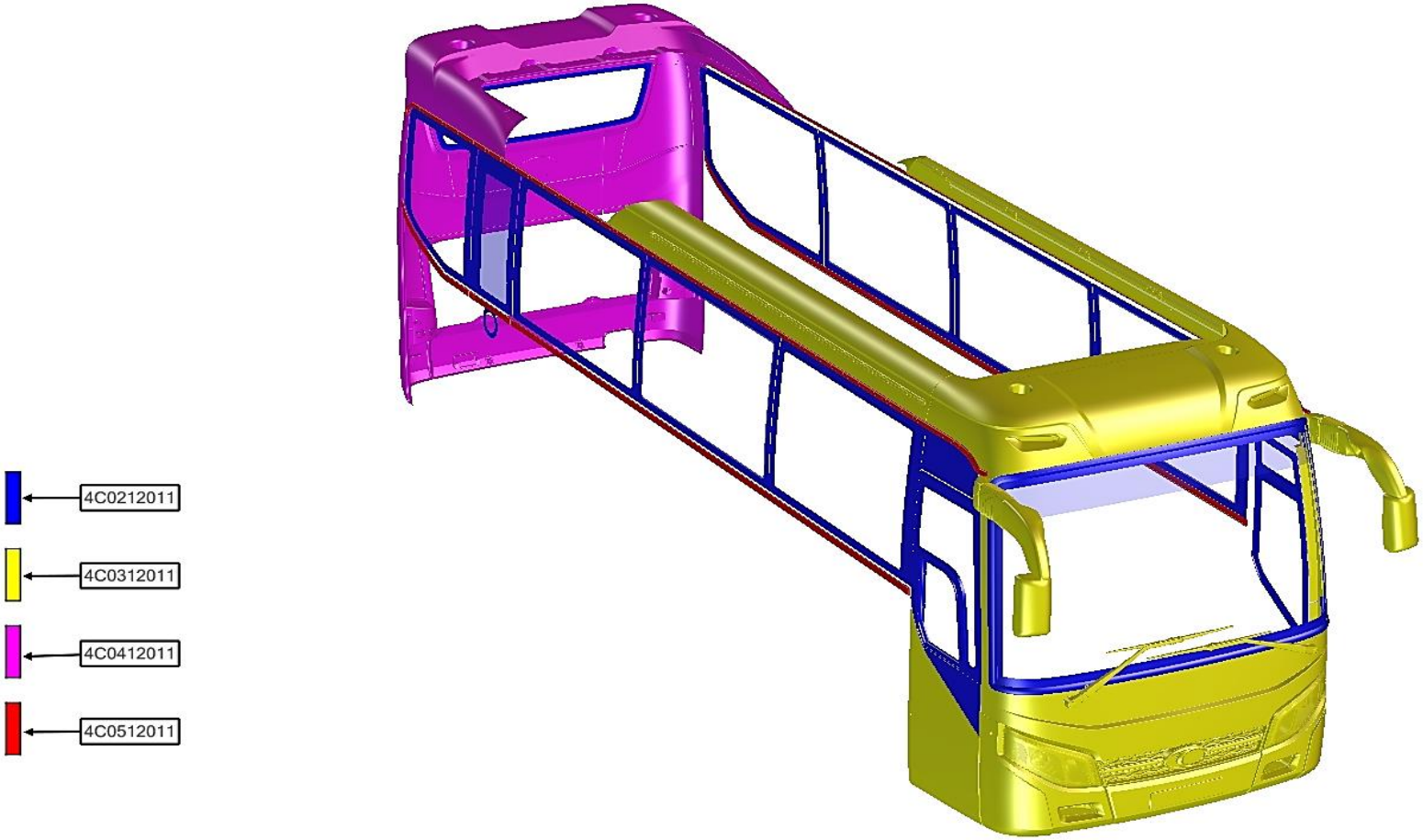

ASSB_NAME	PART NO.	NAME	QTY
EXTERIOR	4C0212011	GLASS	1
	4C0512011	SIDE BUS	1
	4C0412011	REAR	1
	4C0312011	FRONT	1

ASSB_NAME	PART NO.	NAME	QTY
EXTERIOR			

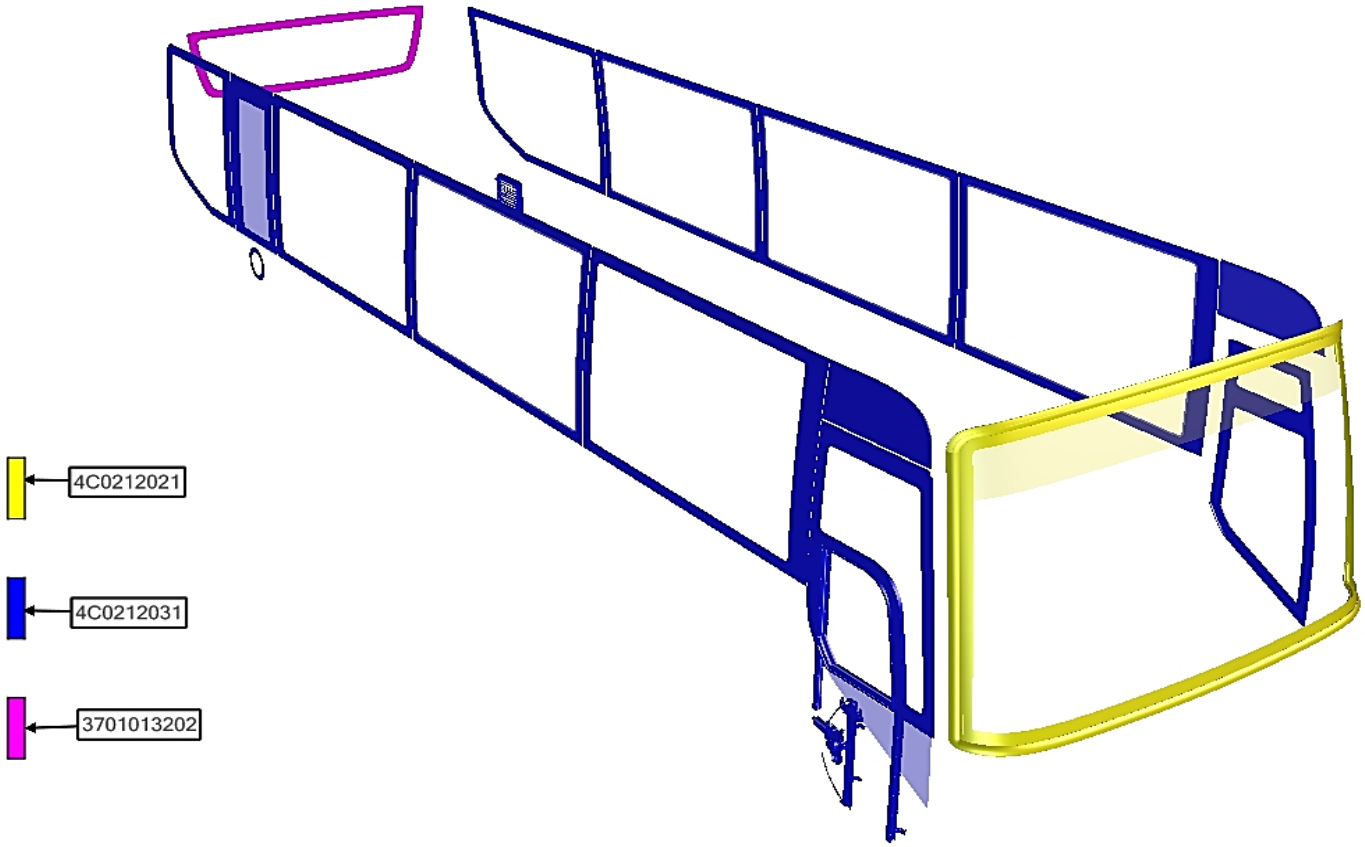

ASSB_NAME	PART NO.	NAME	QTY
GLASS ASSY	4C0212031	GLASS SIDE	1
	4C0212021	WIND GLASS	1
	3701013202	GLASS REAR	1

ASSB_NAME	PART NO.	NAME	QTY
GLASS ASSY			

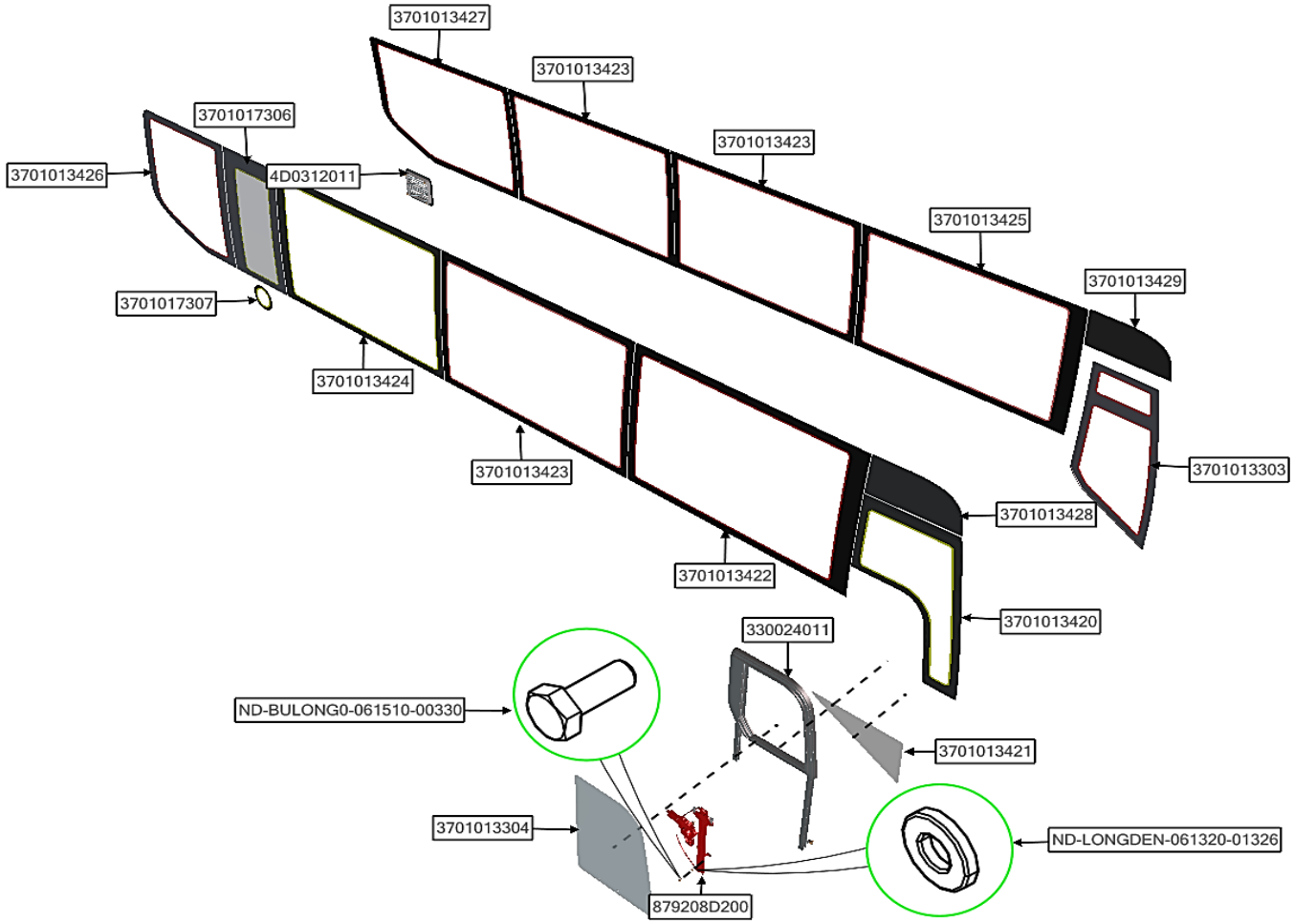

ASSB_NAME	PART NO.	NAME	QTY
GLASS SIDE ASSY	3701013424	SIDE RIGHT GLASS	1
	ND-BULONG0-061510-00330	BOLT 06015100	1
	4D0312011	WIND FILTER	1
	330024011	ALUMINUM FRAME DOOR	1
	3701013303	PASSENGER DOOR GLASS	1
	3701017306	EMERGENCY EXIT GLASS 01	1
	3701017307	EMERGENCY EXIT GLASS 02	1

ASSB_NAME	PART NO.	NAME	QTY
GLASS SIDE ASSY	3701013420	DRIVER DOOR GLASS	1
	3701013421	FIXED GLASS	1
	3701013426	RH SIDE GLASS 05	1
	3701013422	RH SIDE GLASS01	1
	3701013425	LH SIDE GLASS01	1
	3701013423	LH SIDE GLASS02	3
	3701013427	LH SIDE GLASS03	1

ASSB_NAME	PART NO.	NAME	QTY
GLASS SIDE ASSY	3701013428	RH FIXED GLASS	1
	3701013429	LH FIXED GLASS	1
	3701013304	DRIVER SLOW GLASS	1
	879208D200	MOTOR SLOW GLASS	1
	ND-LONGDEN-061320-01326	WASHER Ø06	1

ASSB_NAME	PART NO.	NAME	QTY
GLASS SIDE ASSY			

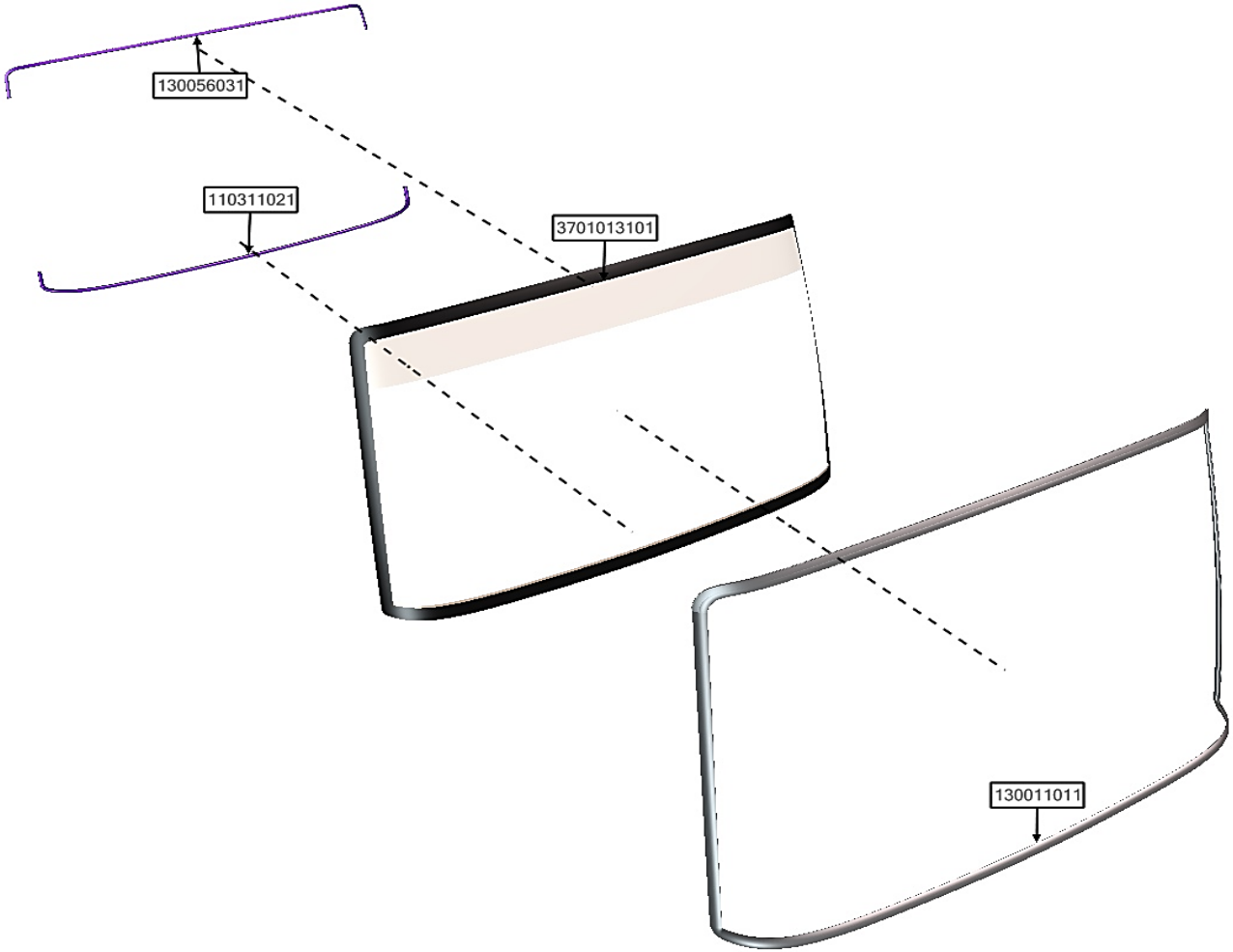

ASSB_NAME	PART NO.	NAME	QTY
WIND GLASS	3701013101	WIND GLASS	1
	110311021	WEATHERSTRIP	1
	130056031	WEATHERSTRIP	1
	130011011	WEATHERSTRIP	1

ASSB_NAME	PART NO.	NAME	QTY
WIND GLASS			

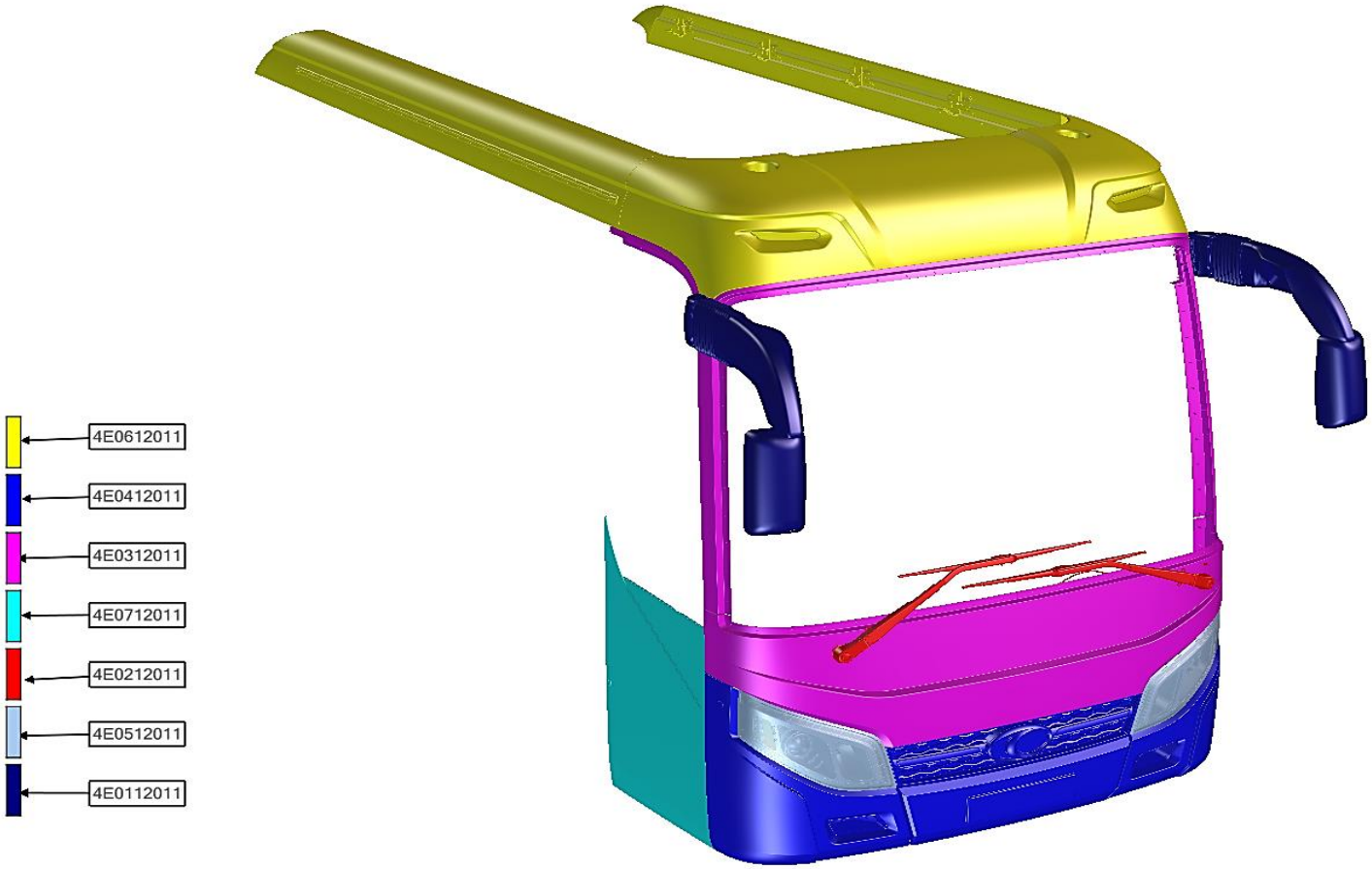

ASSB_NAME	PART NO.	NAME	QTY
FRONT	4E0412011	FRONT BUMPER	1
	4E0712011	FLAP ASSY - FRT BODY	1
	4E0112011	MIRROR ASSY - OUTSIDE	1
	4E0212011	WINDSHIELD WIPER - ASSY	1
	4E0612011	SPOILER ASSY	1
	4E0312011	FRONT MIDDLE PANEL - ASSY	1
	4E0512011	LAMP FRONT - ASSY	1

ASSB_NAME	PART NO.	NAME	QTY
FRONT			

ASSB_NAME	PART NO.	NAME	QTY
FRONT BUMPER ASSY	4G0712011	FRONT MIDDLE BUMPER	1
	4G0612011	BUMPER ASSY-FR,CORNER,RH	1
	4G0512011	BUMPER ASSY-FR,CORNER,LH	1

ASSB_NAME	PART NO.	NAME	QTY
FRONT BUMPER ASSY			

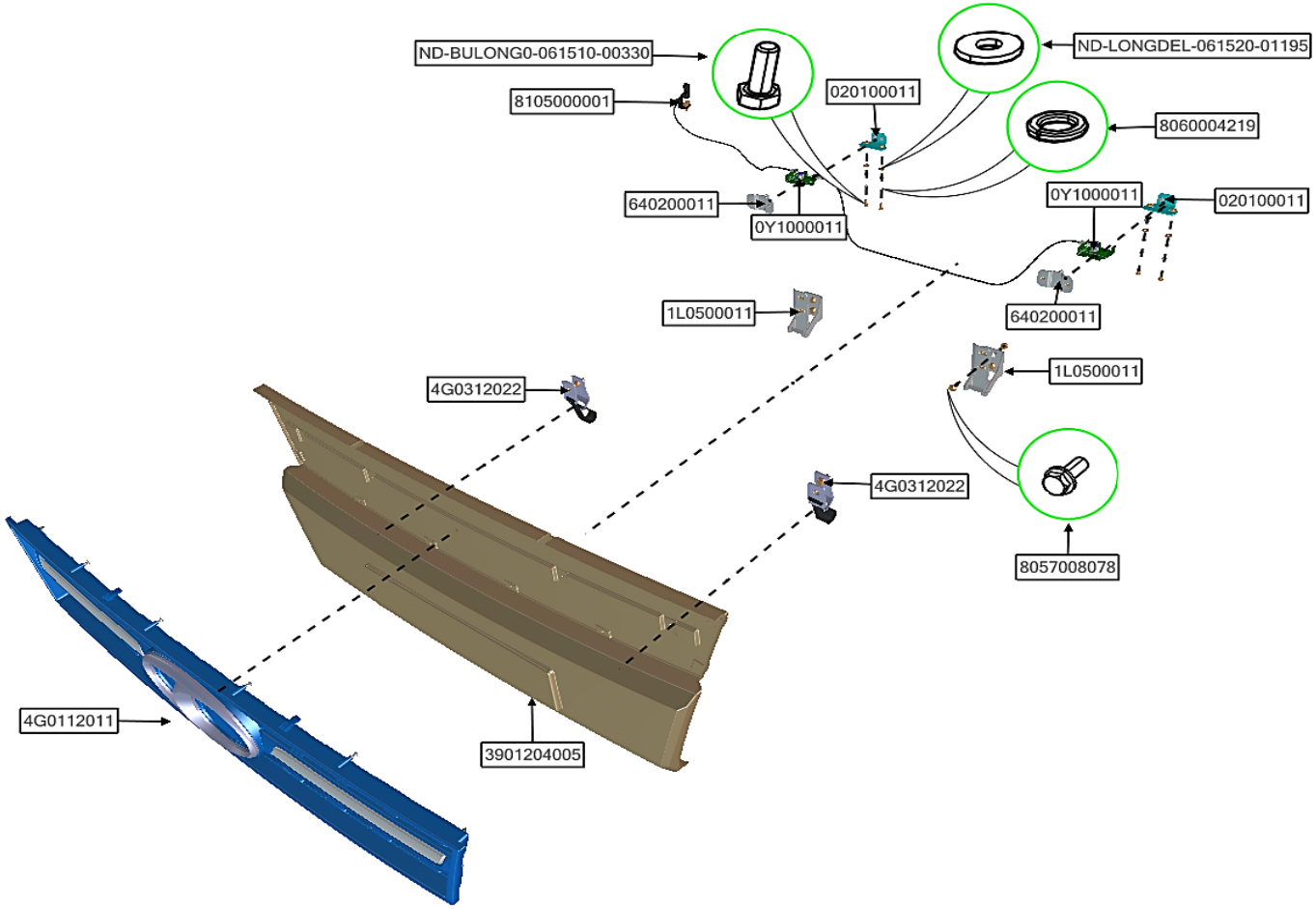

ASSB_NAME	PART NO.	NAME	QTY
FRONT MIDDLE BUMPER	8057006037	BOLT 06015100	4
	ND-BULONG0-061510-00330	BOLT 06015100	4
	8057008078	BOLT 08020125	6
	1L0500011	HINGE	2
	4G0112011	GARNISH ASSY-FR	1
	640200011	STRIKER	2
	3901204005	FRONT MIDDLE BUMPER	1

ASSB_NAME	PART NO.	NAME	QTY
FRONT MIDDLE BUMPER	8105000001	CABLE CATCH RELEASE	1
	4G0312022	BELT	2
	020100011	BRACKET	2
	0Y1000011	LATCH	2
	ND-LONGDEL-061520-01195	WASHER Ø06	4
	8060004219	SPLIT WASHER Ø06	4

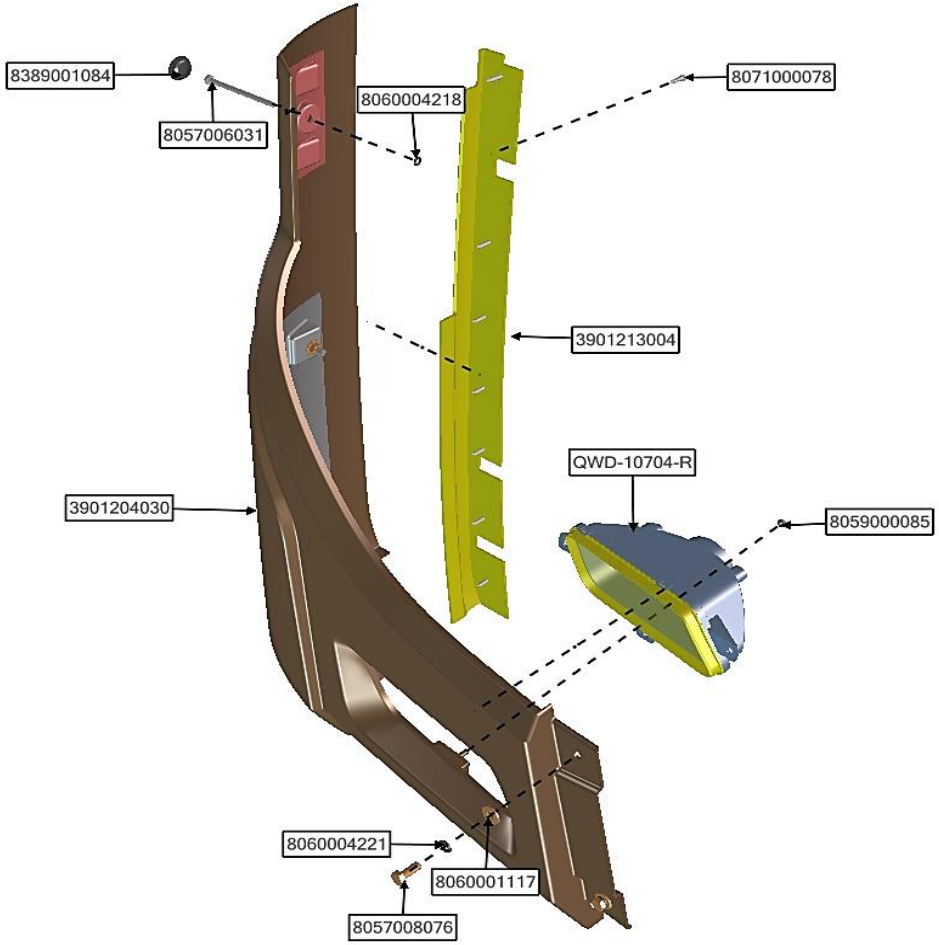

ASSB_NAME	PART NO.	NAME	QTY
BUMPER ASSY-FR,CORNER,RH	8057006031	BOLT 06100100	1
	8057008076	BOLT 08020125	1
	8389001084	COVER	1
	3901204030	FRONT BUMPER SIDE RH	1
	8071000078	SCREW 0520	1
	8060001117	WASHER Ø08	1
	8059000085	NUT 06100	1

ASSB_NAME	PART NO.	NAME	QTY
BUMPER ASSY-FR,CORNER,RH	QWD-10704-R	LAMP BUMPER FRONT RH	1
	8060004218	SPLIT WASHER Ø06	1
	8060004221	SPLIT WASHER Ø08	1
	3901213004	FRONT PILLAR PANEL RH	1

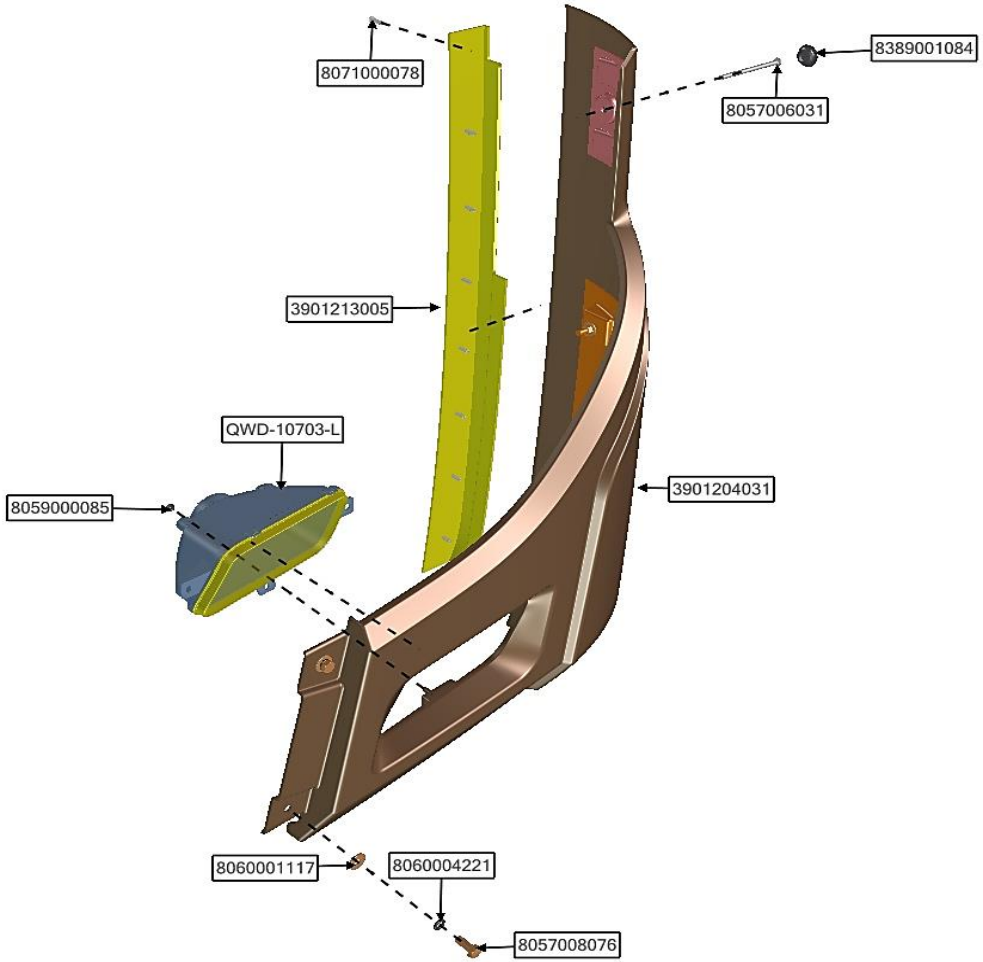

ASSB_NAME	PART NO	NAME	QTY
BUMPER ASSY-FR,CORNER,LH	8057006031	BOLT	1
	8057008076	BOLT	1
	8389001084	COVER	1
	3901204031	FRONT BUMPER SIDE LH	1
	8071000078	SCREW 0520	1
	8060001117	WASHER Ø08	1
	8059000085	NUT 06100	4

ASSB_NAME	PART NO.	NAME	QTY
BUMPER ASSY-FR,CORNER,LH	QWD-10703-L	LAMP BUMPER FRONT LH	2
	8060004221	SPLIT WASHER Ø08	1
	3901213005	FRONT PILLAR PANEL LH	1

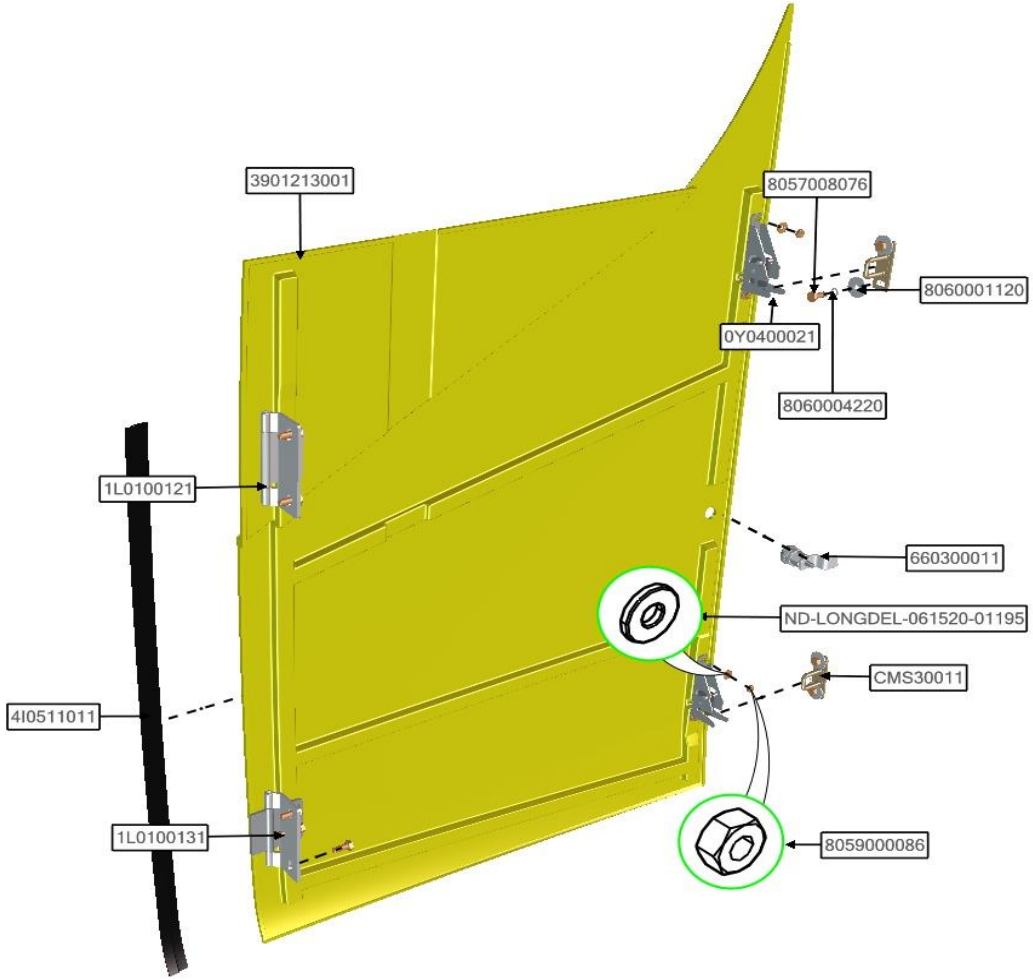

ASSB_NAME	PART NO.	NAME	QTY
FLAP ASSY - FRT BODY	8057008076	BOLT	1
	3901213001	FLAP FRONT	1
	0Y0400021	LOCK FLAP FRONT	2
	1L0100121	HINGE	1
	1L0100131	HINGE	1
	CMS30011	STRIKER	2
	4I0511011	WEATHERSTRIP	1

ASSB_NAME	PART NO.	NAME	QTY
FLAP ASSY - FRT BODY	ND-LONGDEL-061520-01195	WASHER Ø08	1
	8060001120	WASHER Ø08	1
	8059000086	NUT 06100	1
	8060004220	SPLIT WASHER Ø08	1
	660300011	LOCK	1

ASSB_NAME	PART NO.	NAME	QTY
LAMP FRONT - ASSY	51310202124	LAMP ASSY- HEAD RH	1
	51310102124	LAMP ASSY- HEAD LH	1

ASSB_NAME	PART NO.	NAME	QTY
LAMP FRONT - ASSY			

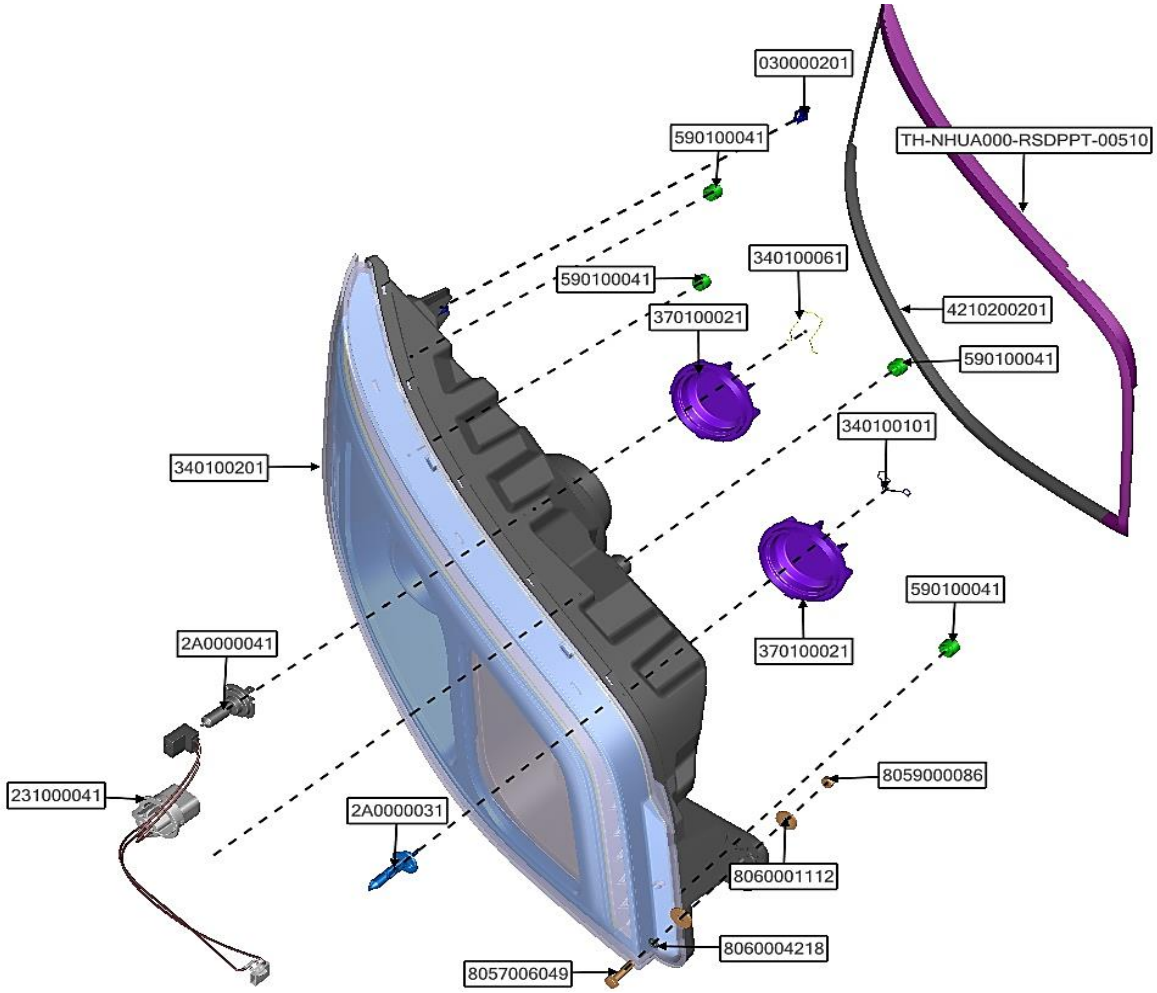

ASSB_NAME	PART NO.	NAME	QTY
LAMP RH FRONT	2A0000031	BULB	1
	2A0000041	BULB	1
	030000201	CLIP	1
	231000041	WIRING ASSY	1
	340100061	CLAMP BULD	1
	340100101	CLAMP BULD	1
	340100201	COVER LAMP RH	1

ASSB_NAME	PART NO.	NAME	QTY
LAMP RH FRONT	370100021	COVER DUST	2
	590100041	RETAINER	4
	4210200201	WEATHERSTRIP	1
	8057006049	BOLT	1
	8059000086	NUT 06100	1
	8060001112	WASHER Ø08	1
	8060004218	SPLIT WASHER Ø06	1

ASSB_NAME	PART NO.	NAME	QTY
	TH-NHUA000-RSDPPT-00510	WEATHERSTRIP	1

ASSB_NAME	PART NO.	NAME	QTY

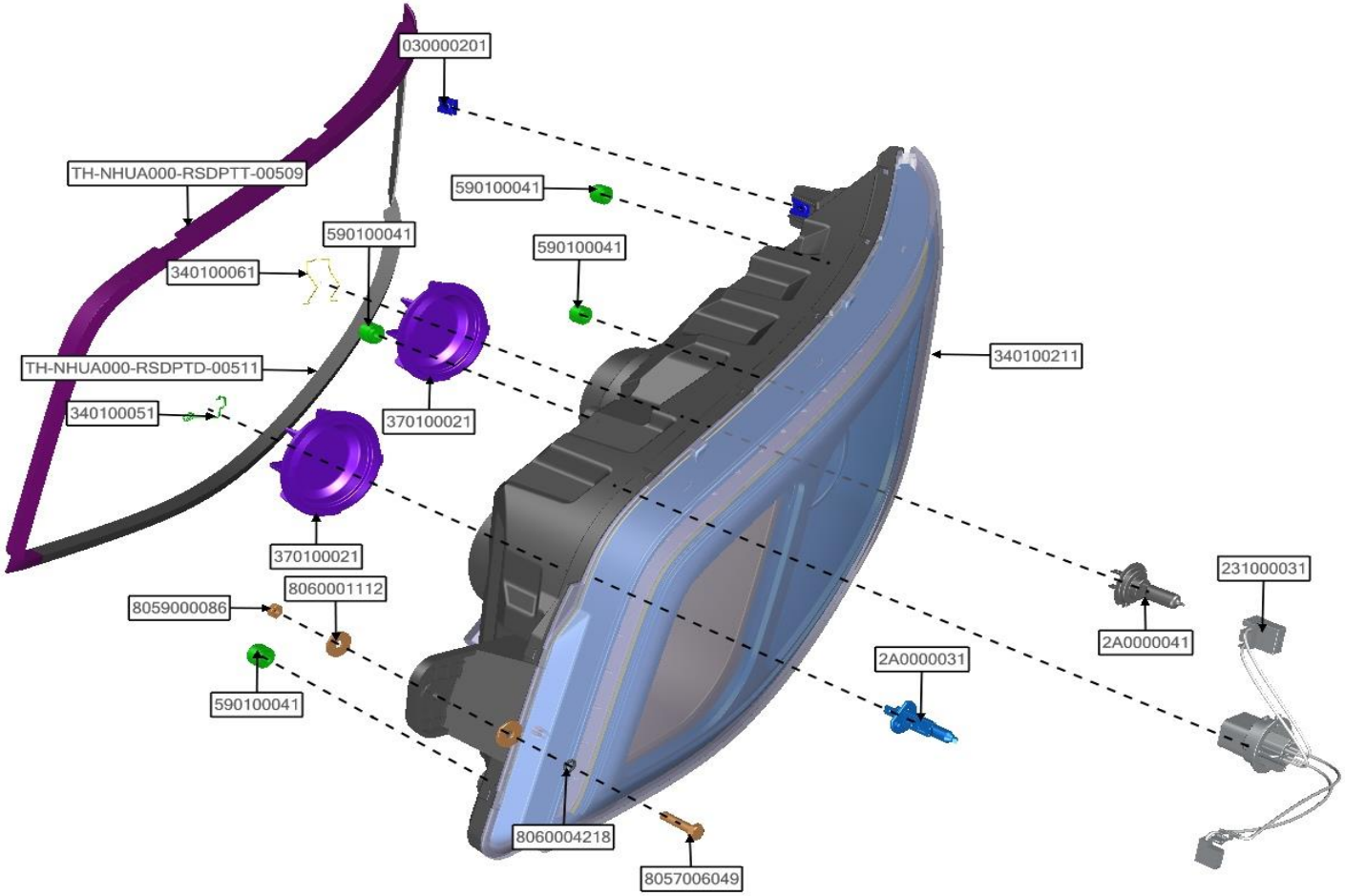

ASSB_NAME	PART NO.	NAME	QTY
LAMP LH FRONT	2A0000031	BULB	1
	2A0000041	BULB	1
	030000201	CLIP	1
	231000031	WIRING ASSY	1
	340100051	CLAMP BULD	1
	340100061	CLAMP BULD	1
	340100211	COVER LAMP LH	1

ASSB_NAME	PART NO.	NAME	QTY
LAMP LH FRONT	370100021	COVER DUST	2
	590100041	RETAINER	4
	8057006049	BOLT	1
	8059000086	NUT 06100	1
	8060001112	WASHER Ø08	1
	8060004218	SPLIT WASHER Ø06	1
	TH-NHUA000-RSDPTD-00511	WEATHERSTRIP	1

ASSB_NAME	PART NO.	NAME	QTY
LAMP LH FRONT	TH-NHUA000-RSDPTT-00509	WEATHERSTRIP	1

ASSB_NAME	PART NO.	NAME	QTY
LAMP LH FRONT			

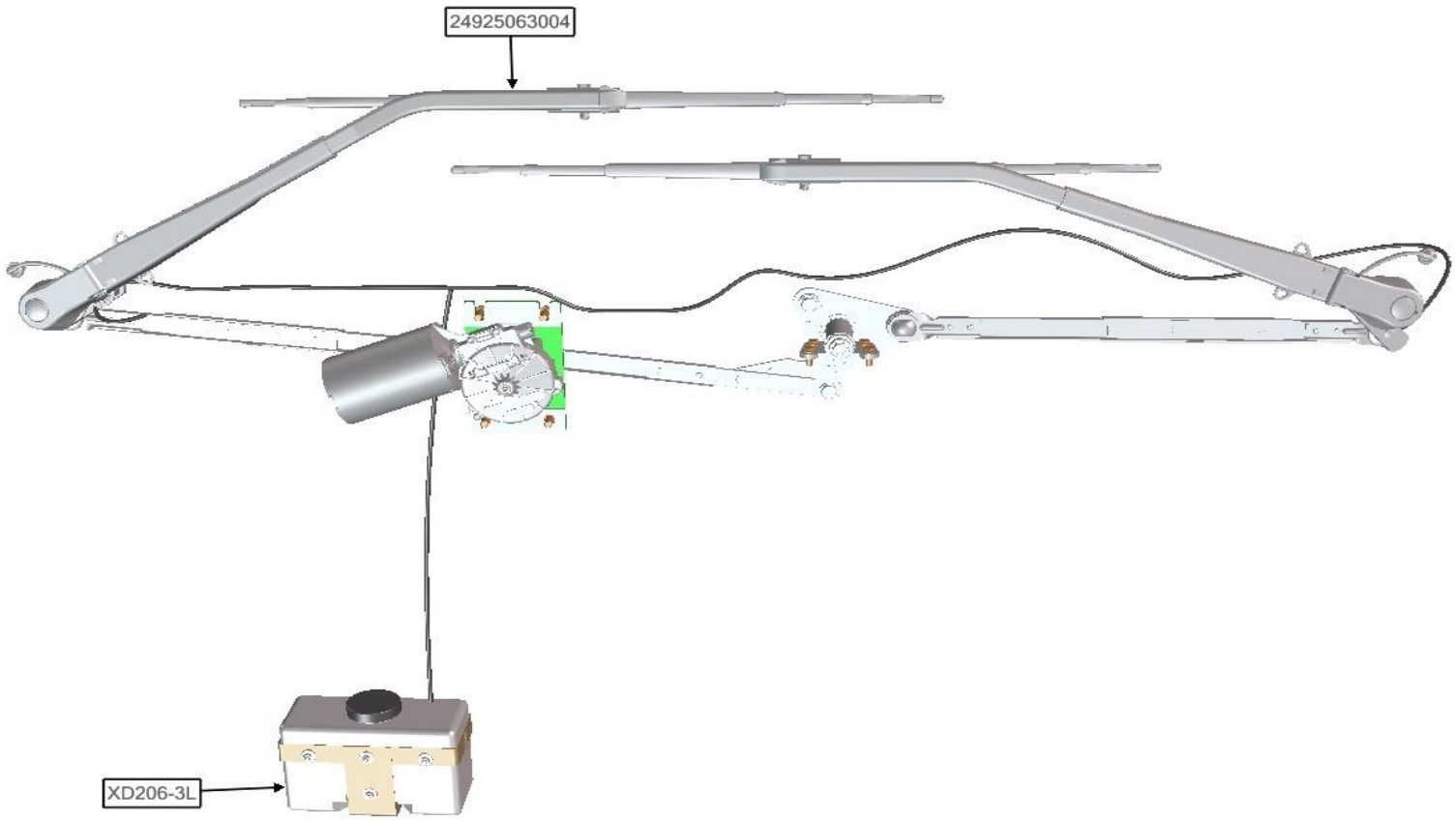

ASSB_NAME	PART NO.	NAME	QTY
WINDSHIELD WIPER - ASSY	XD206-3L	RESEVOIR -FR	1
	24925063004	WINDSHIELD WIPER	5

ASSB_NAME	PART NO.	NAME	QTY

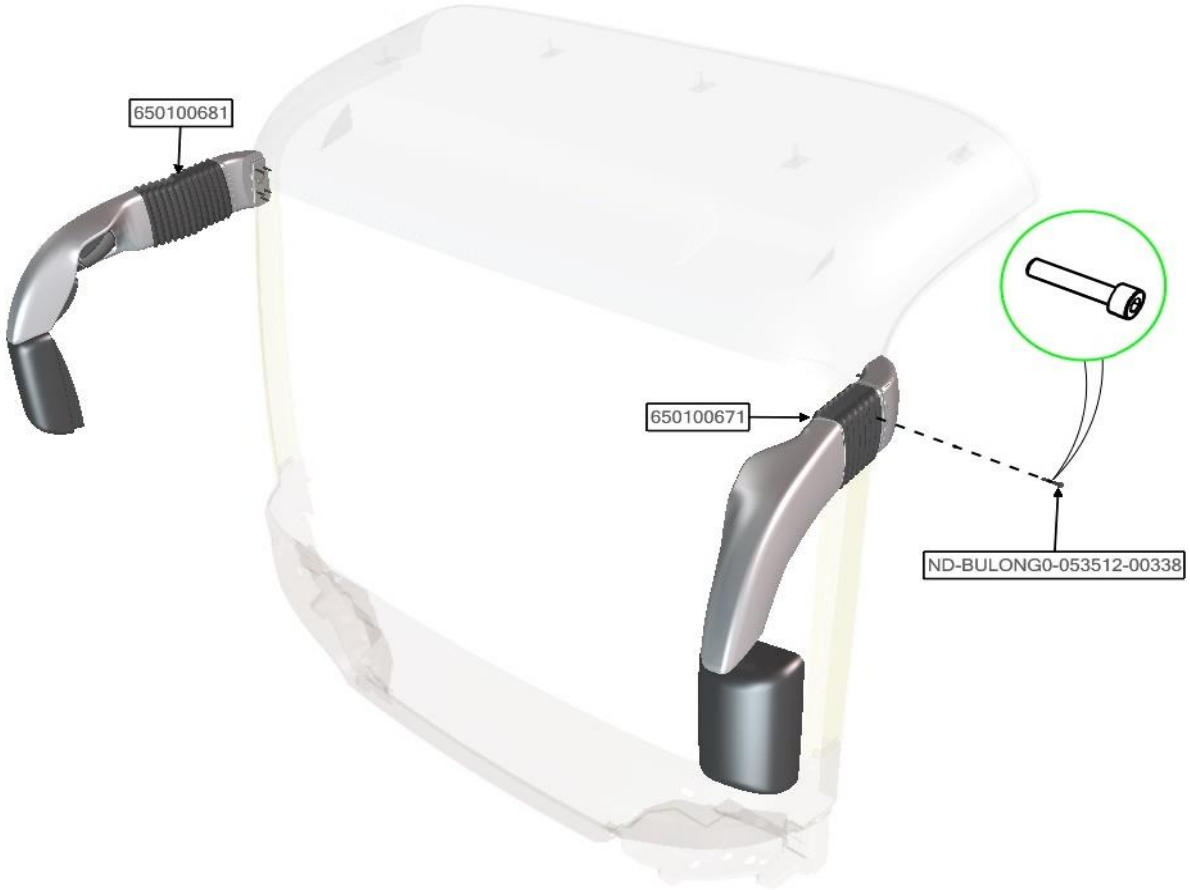

ASSB_NAME	PART NO.	NAME	QTY
MIRROR ASSY - OUTSIDE	ND-BULONG0-053512-00338	BOLT	10
	650100681	MIRROR - OUTSIDE - RH	1
	650100671	MIRROR - OUTSIDE - LH	1
	4E0612031	FRONT SPOLIER - ASSY - RH	1

ASSB_NAME	PART NO.	NAME	QTY
MIRROR ASSY - OUTSIDE			

ASSB_NAME	PART NO.	NAME	QTY
SPOILER ASSY	4E0612031	FRONT SPOLIER - ASSY - RH	1
	4E0612041	FRONT SPOLIER - ASSY - LH	1
	4E0612021	FRONT SPOLIER - ASSY	1

ASSB_NAME	PART NO.	NAME	QTY
SPOILER ASSY			

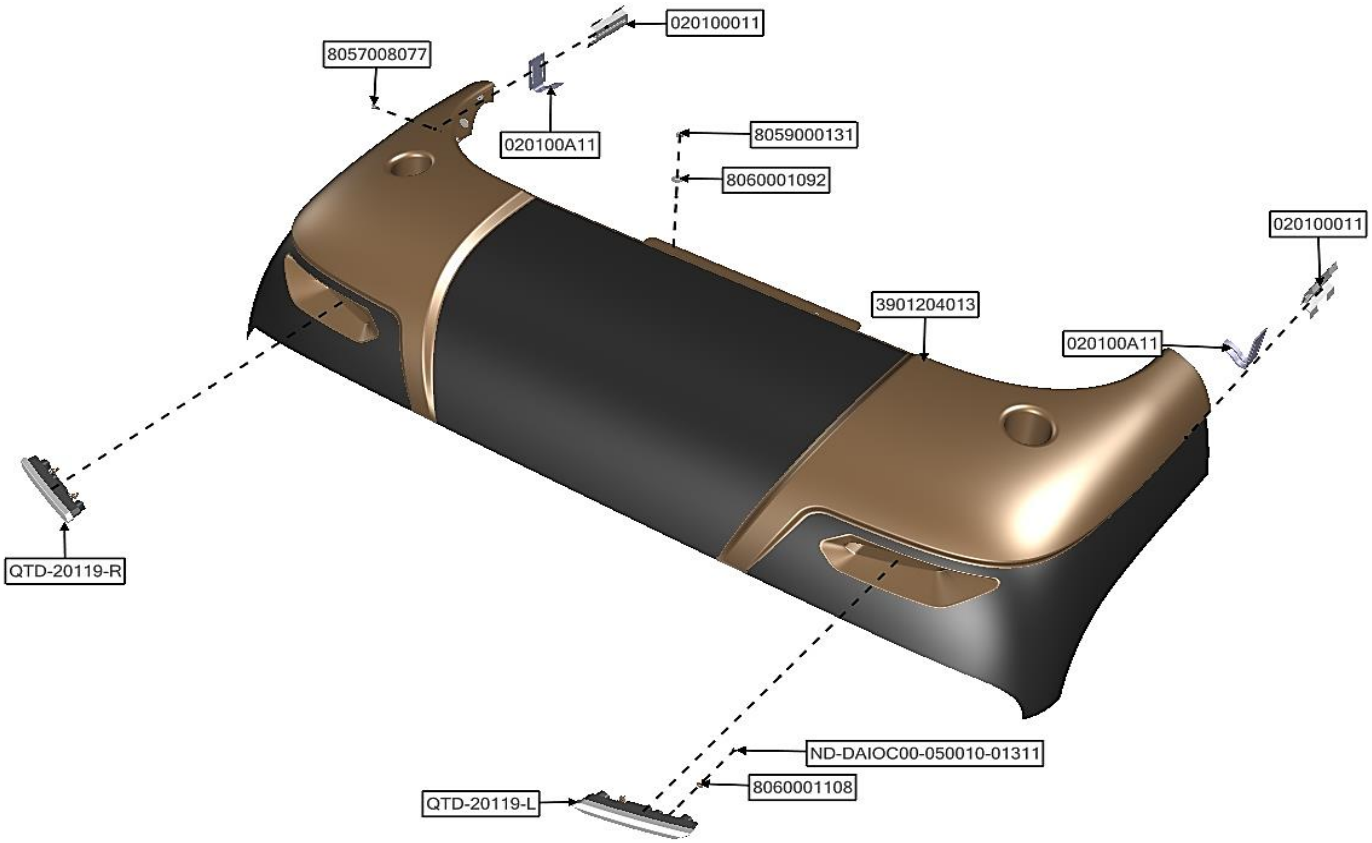

ASSB_NAME	PART NO.	NAME	QTY
FRONT SPOLIER - ASSY	020100A11	BRACKET	2
	020100011	BRACKET	2
	3901204013	FRONT SPOILER	1
	8057008077	BOLT	1
	8059000131	NUT 10150	1
	8060001092	WASHER Ø08	1
	8060001108	WASHER Ø08	1

ASSB_NAME	PART NO.	NAME	QTY
FRONT SPOLIER - ASSY	ND-DAIOC00-050010-01311	NUT 05100	1
	QTD-20119-L	LH SPOLIER FRONT LAMP	1
	QTD-20119-R	RH SPOLIER FRONT LAMP	1

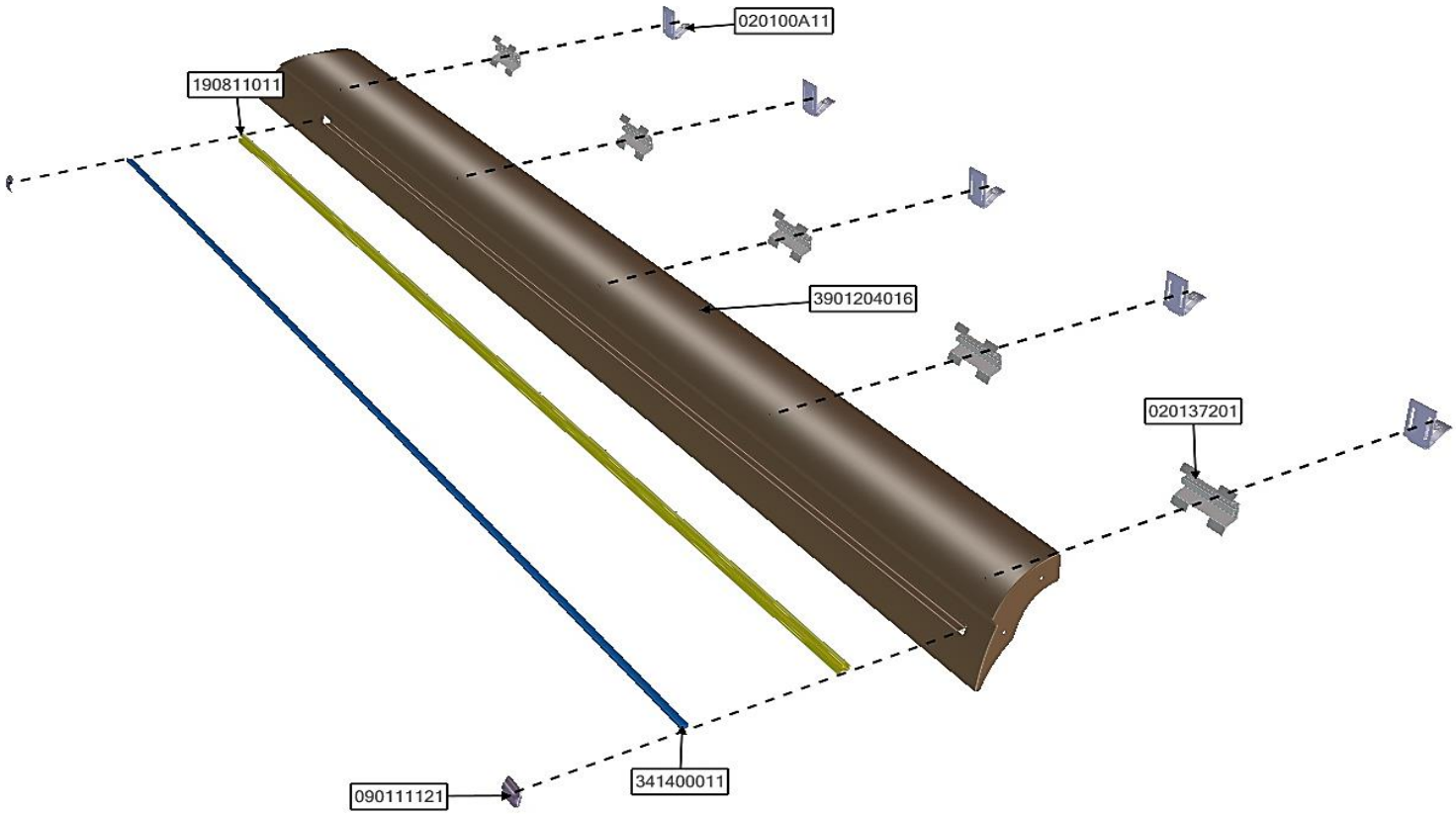

ASSB_NAME	PART NO.	NAME	QTY
FRONT SPOLIER - ASSY - RH	090111121	COVER	1
	3901204016	FRONT SPOLIER - RH	1
	190811011	MOULD	1
	020100A11	BRACKET	5
	020137201	BRACKET	5
	341400011	LED LIGHT	1

ASSB_NAME	PART NO.	NAME	QTY
FRONT SPOLIER - ASSY - RH			

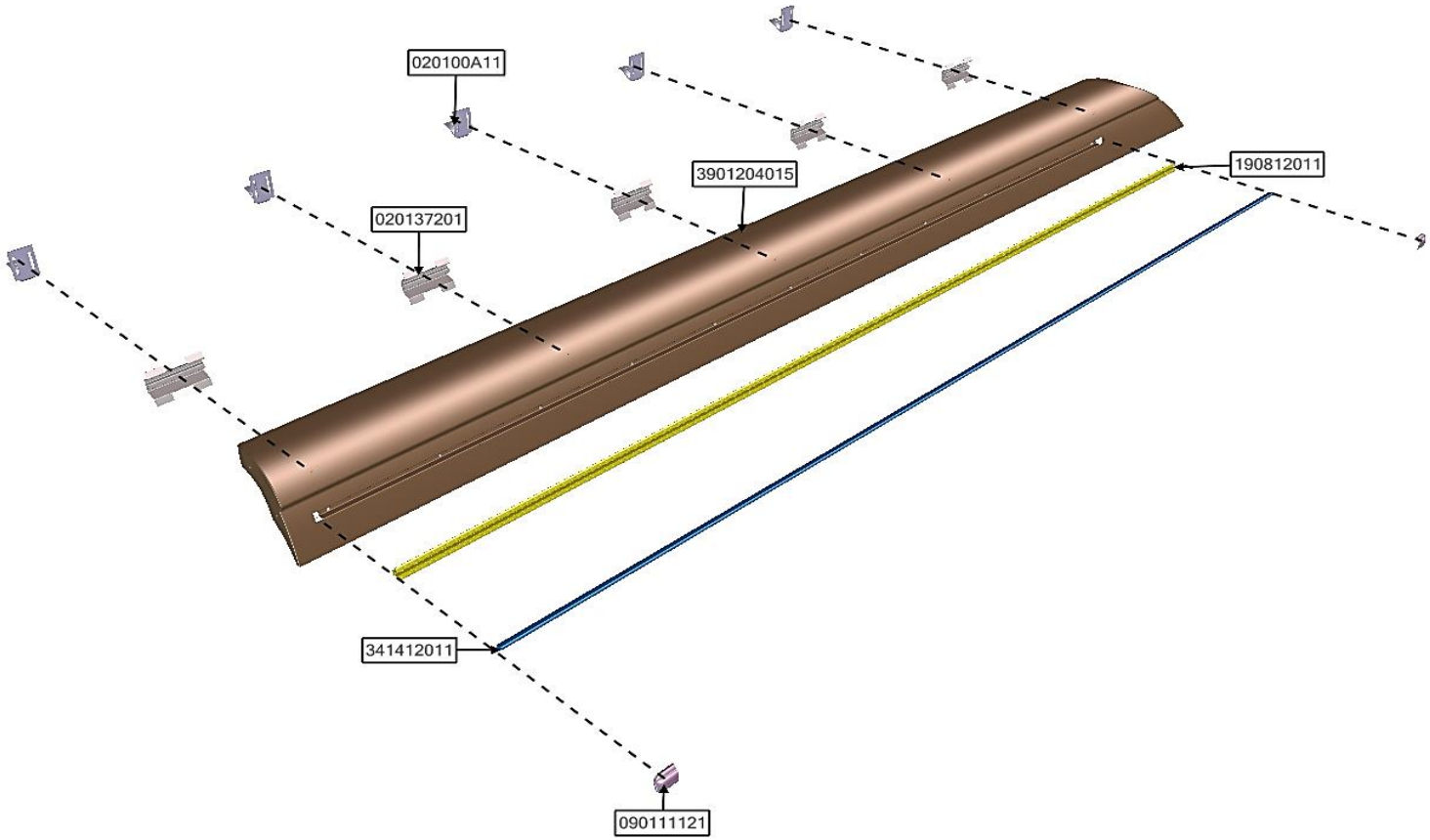

ASSB_NAME	PART NO.	NAME	QTY
FRONT SPOLIER - ASSY - LH	090111121	COVER	1
	341412011	LED LIGHT	1
	3901204015	FRONT SPOLIER - LH	1
	190812011	MOULD	1
	020100A11	BRACKET	5
	020137201	BRACKET	5

ASSB_NAME	PART NO.	NAME	QTY
FRONT SPOLIER - ASSY - LH			

ASSB_NAME	PART NO.	NAME	QTY
FRONT MIDDLE PANEL - ASSY	3901204018	FRONT MIDDLE PANEL	1
	3901204004	FRONT ROOF PANEL	1
	3901213002	FRONT PILLAR RH	1
	3901213003	FRONT PILLAR LH	1

ASSB_NAME	PART NO.	NAME	QTY
FRONT MIDDLE PANEL - ASSY			

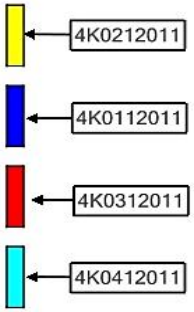

ASSB_NAME	PART NO.	NAME	QTY
REAR	4K0212011	BUMPER ASSY	1
	4K0412011	REAR SPOLIER ASSY	1
	4K0112011	REAR MIDDLE PANEL-ASSY	1
	4K0312011	LAMP REAR-ASSY	1

ASSB_NAME	PART NO.	NAME	QTY
REAR			

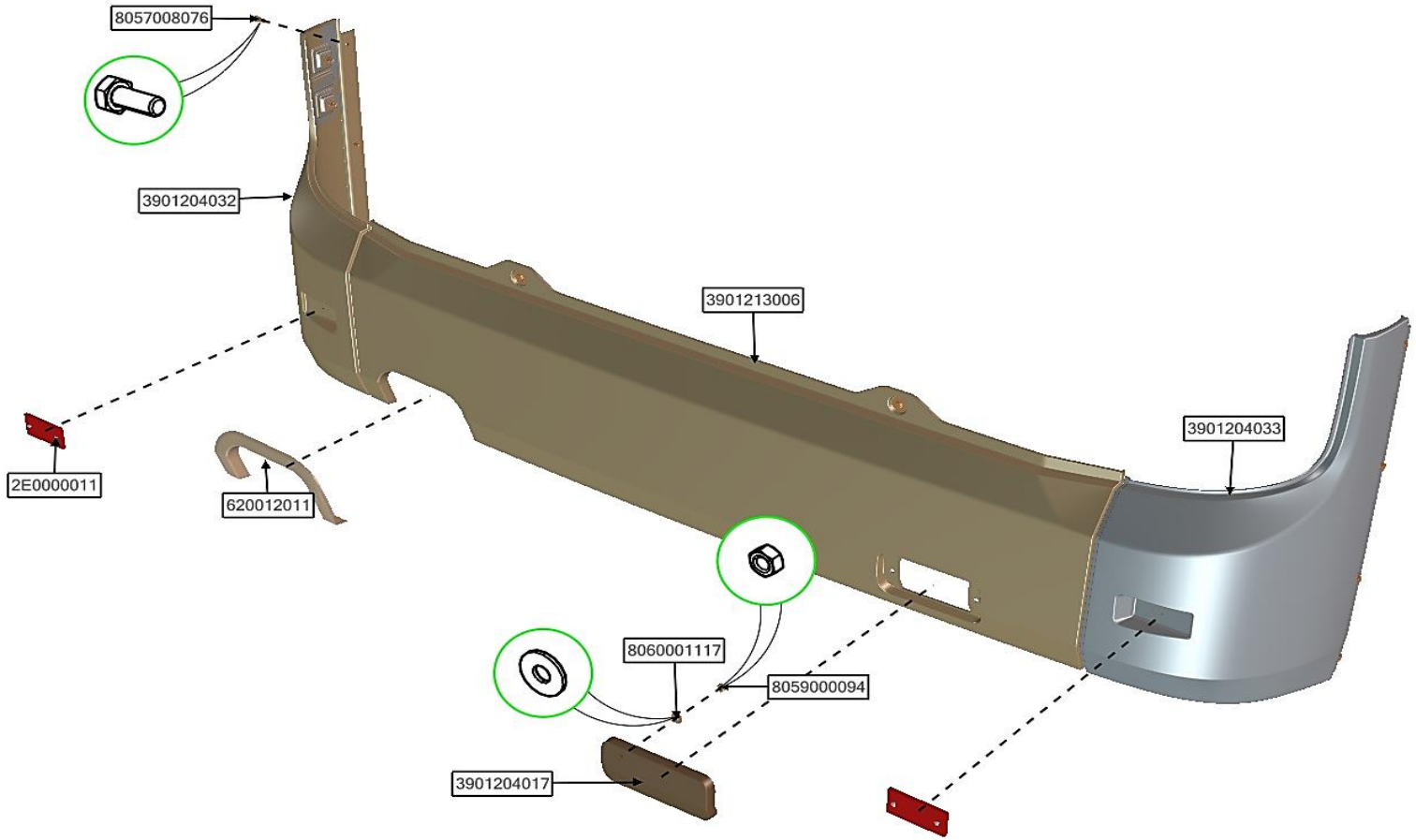

ASSB_NAME	PART NO.	NAME	QTY
BUMPER ASSY	8057008076	BOLT	1
	620012011	COVER	1
	3901213006	REAR MIDDLE BUMPER	1
	3901204033	BUMPER ASSY-RR,CORNER,RH	1
	3901204032	BUMPER ASSY-RR,CORNER,LH	1
	3901204017	TOWING HOOK	1
	2E0000011	REFLECTIVE SHEET	2

ASSB_NAME	PART NO.	NAME	QTY
BUMPER ASSY	8060001117	WASHER Ø08	1
	8059000094	NUT 08125	1

ASSB_NAME	PART NO.	NAME	QTY
LAMP REAR-ASSY	340200061	LAMP REAR RH ASSY	1
	340200021	LAMP REAR LH ASSY	1

ASSB_NAME	PART NO.	NAME	QTY
LAMP REAR-ASSY			

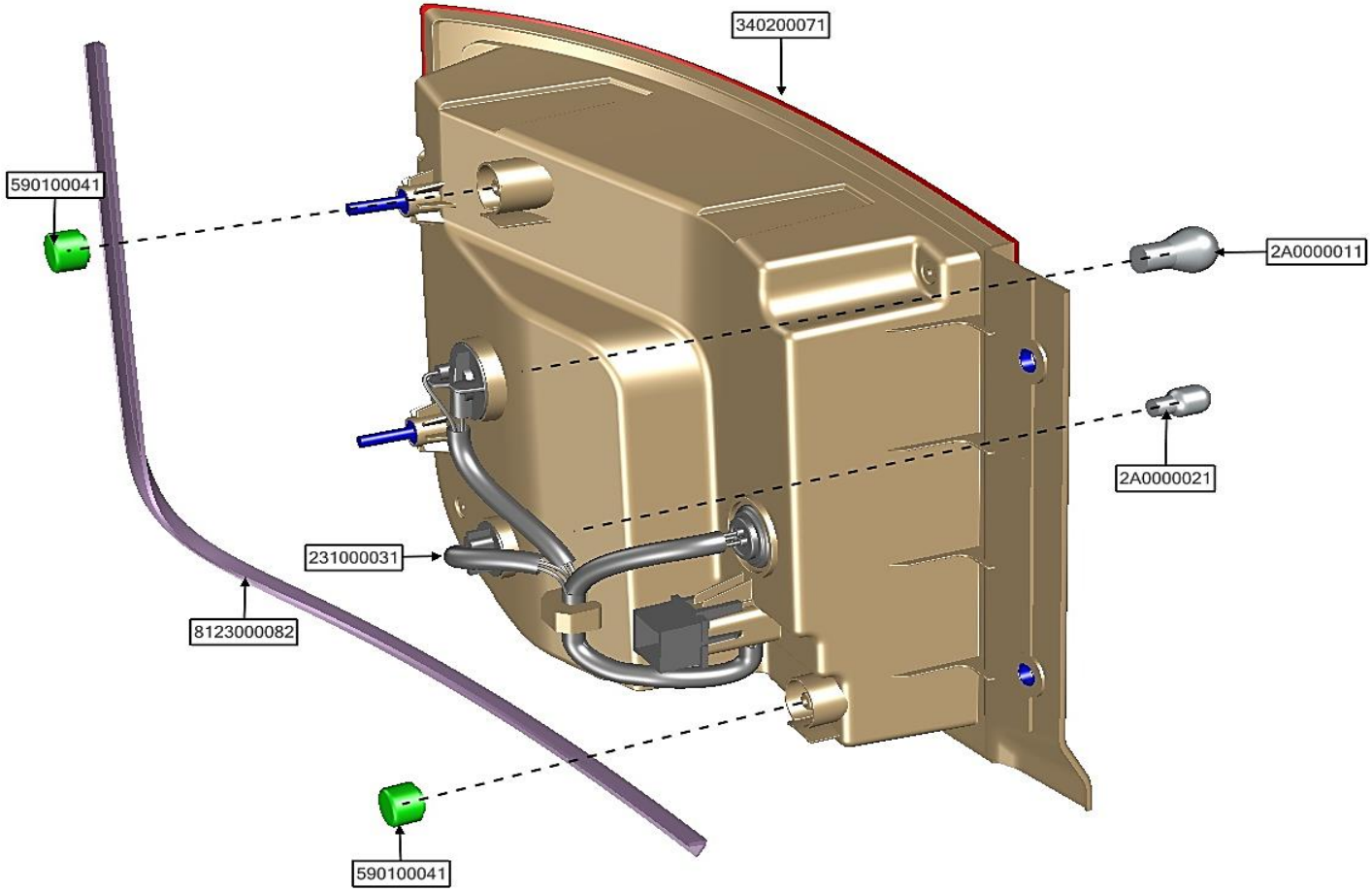

ASSB_NAME	PART NO.	NAME	QTY
LAMP REAR RH ASSY	2A0000011	BULD	1
	2A0000021	BULD	1
	231000031	WIRING ASSY	1
	340200071	COVER LAMP REAR RH	1
	590100041	RETAINER	2
	8123000082	WEATHERSTRIP	1

ASSB_NAME	PART NO.	NAME	QTY
LAMP REAR RH ASSY			

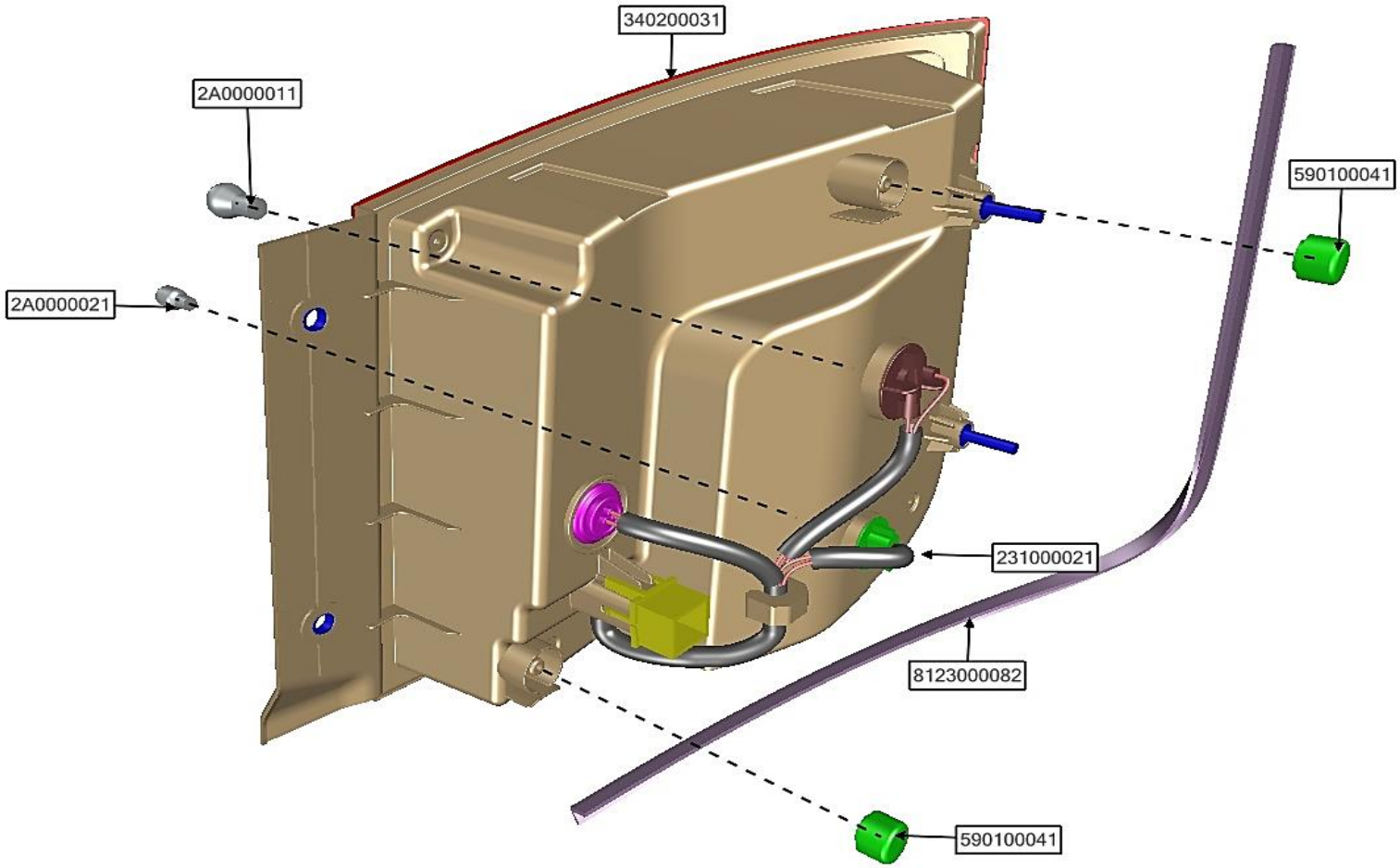

ASSB_NAME	PART NO.	NAME	QTY
LAMP REAR LH ASSY	2A0000011	BULD	1
	2A0000021	BULD	1
	231000021	WIRING ASSY	1
	340200031	COVER LAMP REAR LH	1
	590100041	RETAINER	2
	8123000082	WEATHERSTRIP	1

ASSB_NAME	PART NO.	NAME	QTY
LAMP REAR LH ASSY			

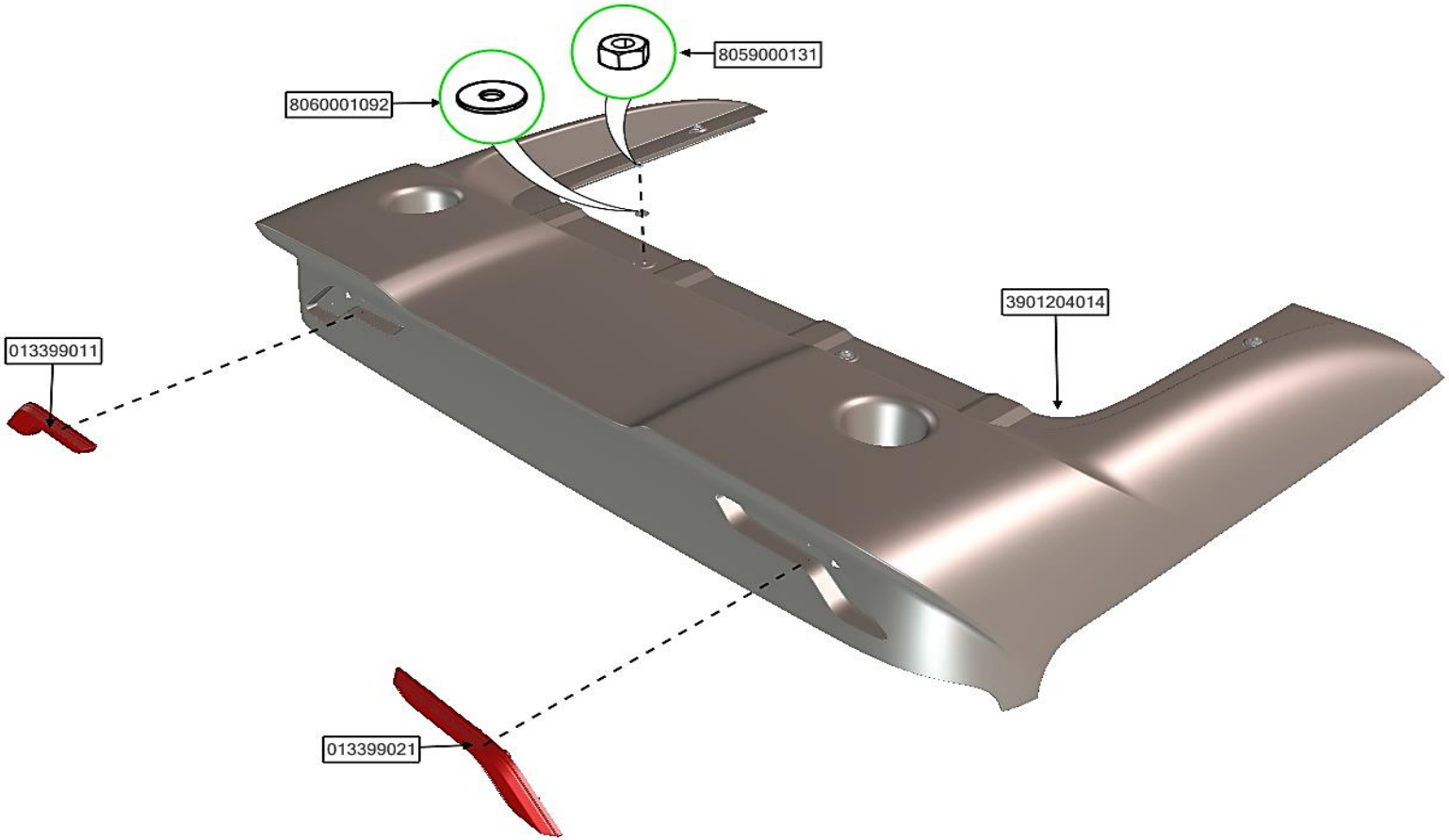

ASSB_NAME	PART NO.	NAME	QTY
REAR SPOLIER ASSY	3901204014	REAR SPOLIER	1
	8060001092	WASHER Ø08	1
	8059000131	NUT 10150	1
	013399021	LAMP REAR SPOILER RH	1
	013399011	LAMP REAR SPOILER LH	1

ASSB_NAME	PART NO.	NAME	QTY
REAR SPOLIER ASSY			

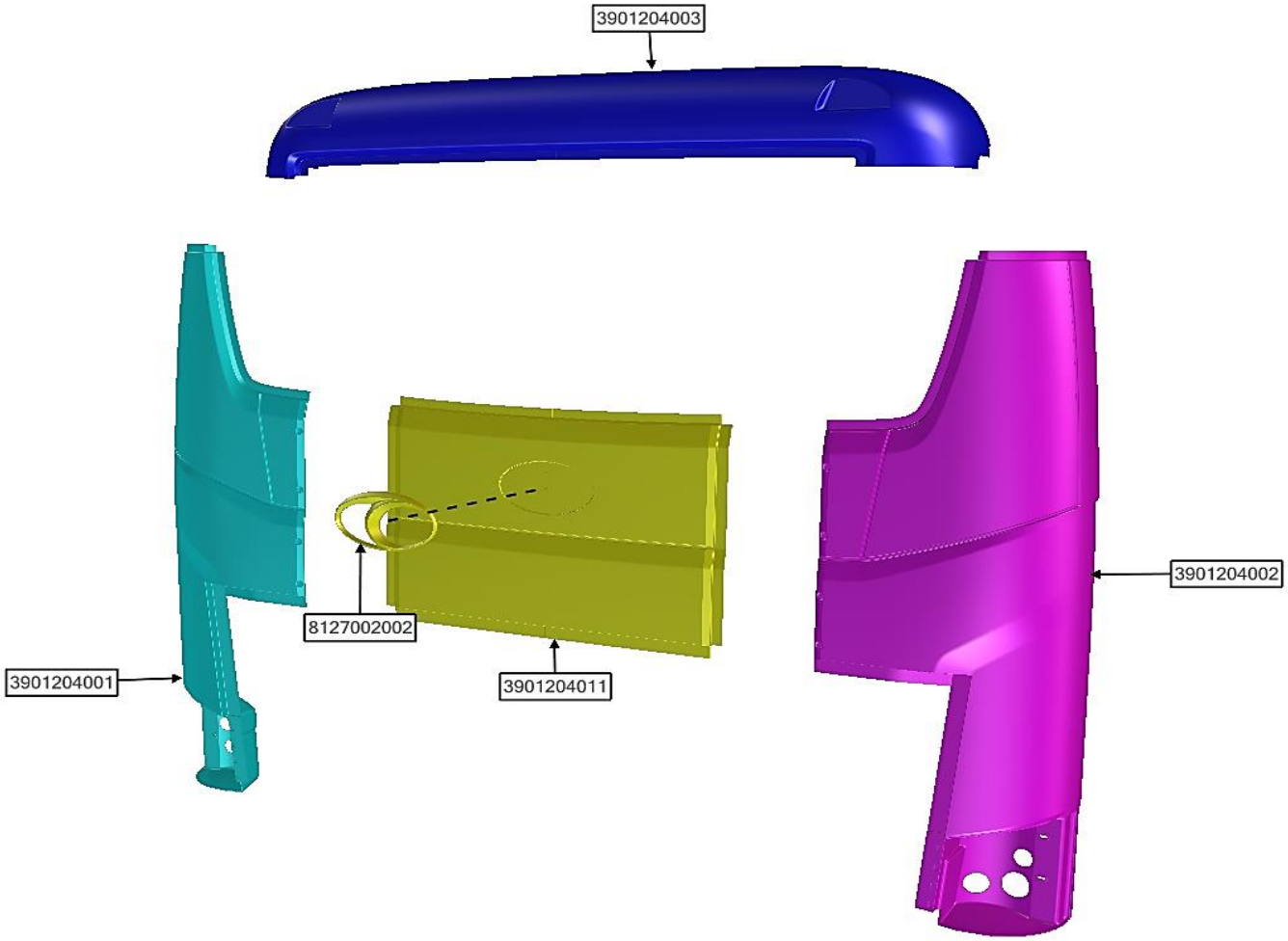

ASSB_NAME	PART NO.	NAME	QTY
REAR MIDDLE PANEL-ASSY	8127002002	LOGO 280X150	1
	3901204011	REAR MIDDLE PANEL	1
	3901204003	REAR ROOF PANEL	1
	3901204002	REAR PILLAR PANEL RH	1
	3901204001	REAR PILLAR PANEL LH	1

ASSB_NAME	PART NO.	NAME	QTY
REAR MIDDLE PANEL-ASSY			

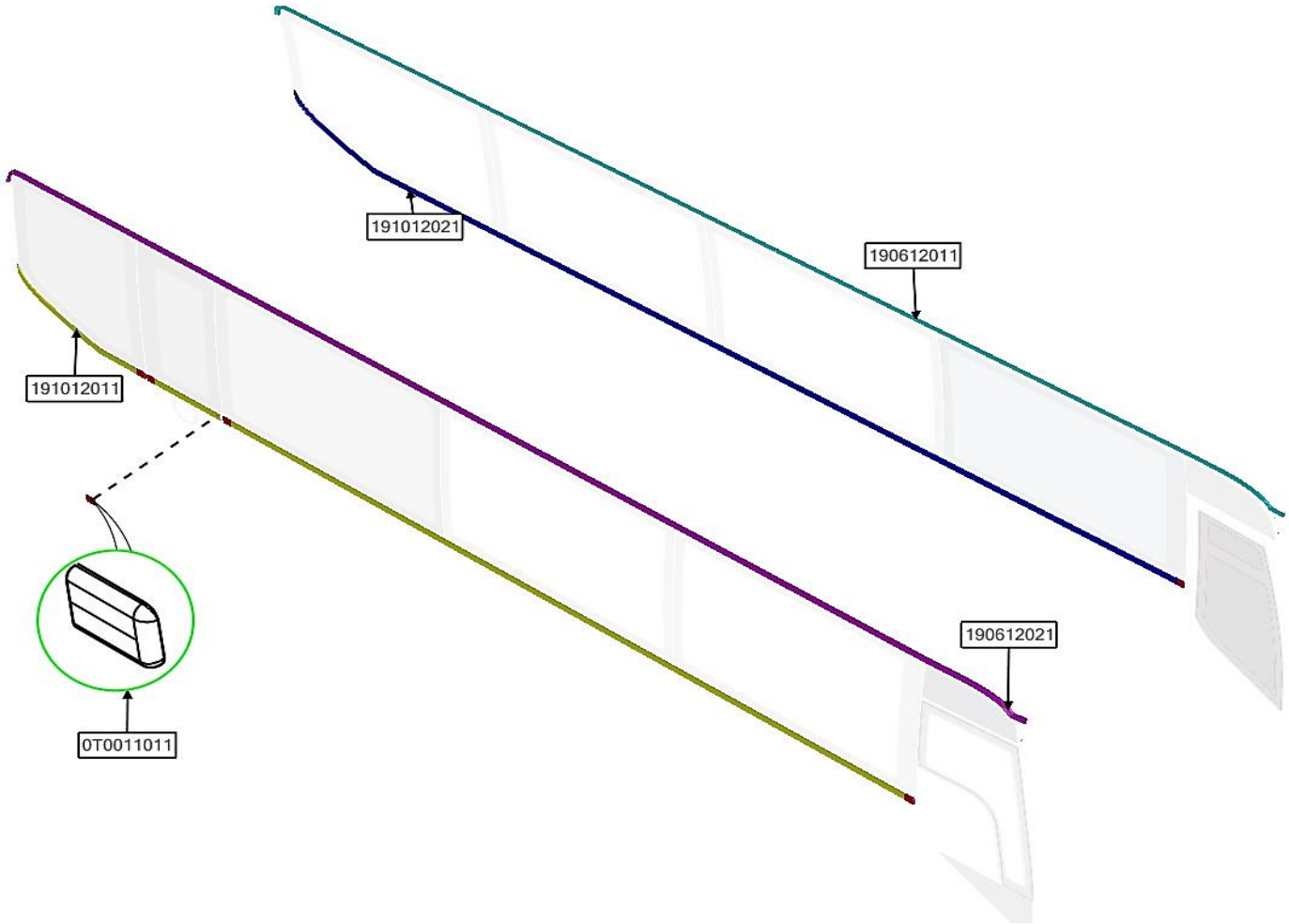

ASSB_NAME	PART NO.	NAME	QTY
SIDE BUS	0T0011011	COVER	6
	191012011	MOULD	1
	191012021	MOULD	1
	190612021	MOULD	1
	190612011	MOULD	1

ASSB_NAME	PART NO.	NAME	QTY
SIDE BUS			

ASSB_NAME	PART NO.	NAME	QTY
INTERIOR	4Q0210011	CEILING	1
	4Q0310011	SIDE BODY	1
	4Q0410011	DASHBOARD ASSY	1
	4Q0510011	CURTAIN ASSY	1
	4Q0610011	SEATS	1
	4Q0810011	WIND DUCT ASSY	1
	4Q0901011	LUGGAGE SHELVES ASSY	1

ASSB_NAME	PART NO.	NAME	QTY
INTERIOR	4Q1010011	FLOOR ASSY	1
	4Q1110011	SAFETY SYSTEM	1
	4Q1210011	HANDRAIL ASSY	1
	4Q1310011	FUNCTIONAL SYSTEM	1
	4Q1410011	LUGGAGE COMPARTMENT	1

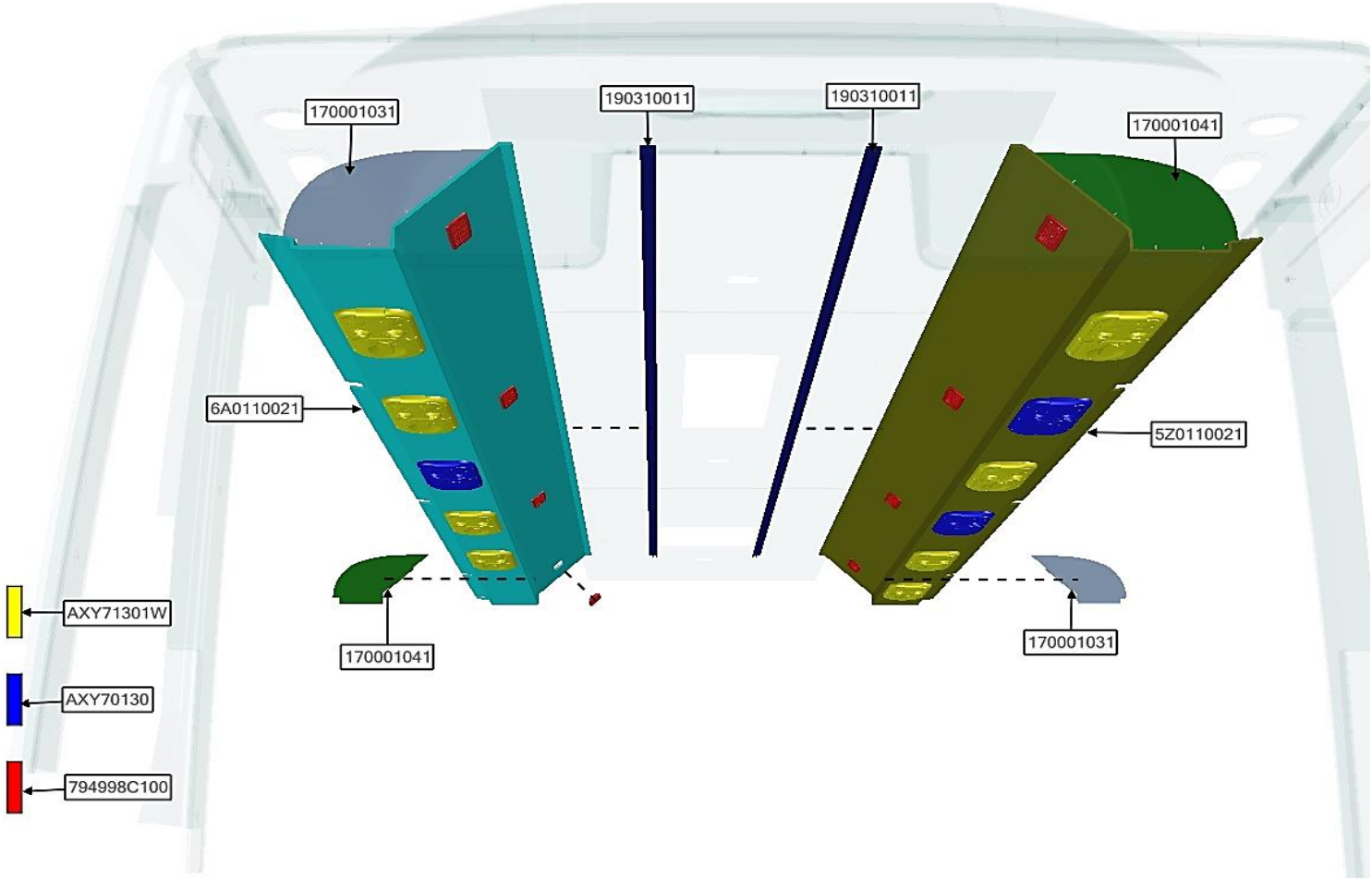

ASSB_NAME	PART NO.	NAME	QTY
CURTAIN ASSY	5Z0110021	LH WIND DUCT ASSY	1
	6A0110021	RH WIND DUCT ASSY	1
	794998C100	AIR-CONDITIONING DOOR	8
	170001031	CLADDING 01	2
	170001041	CLADDING 02	2
	190310011	WIND DUCT MOULDING 01	2
	AXY70130	READING LIGHTS WITHOUT SPEAKERS	3

ASSB_NAME	PART NO.	NAME	QTY
CURTAIN ASSY	AXY71301W	READING LIGHTS WITH SPEAKER	8
	4Q0510041	REAR CURTAIN ASSY	1
	4Q0510031	SIDE CURTAIN ASSY	1
	4Q0510021	SUNVISOR ASSY	1

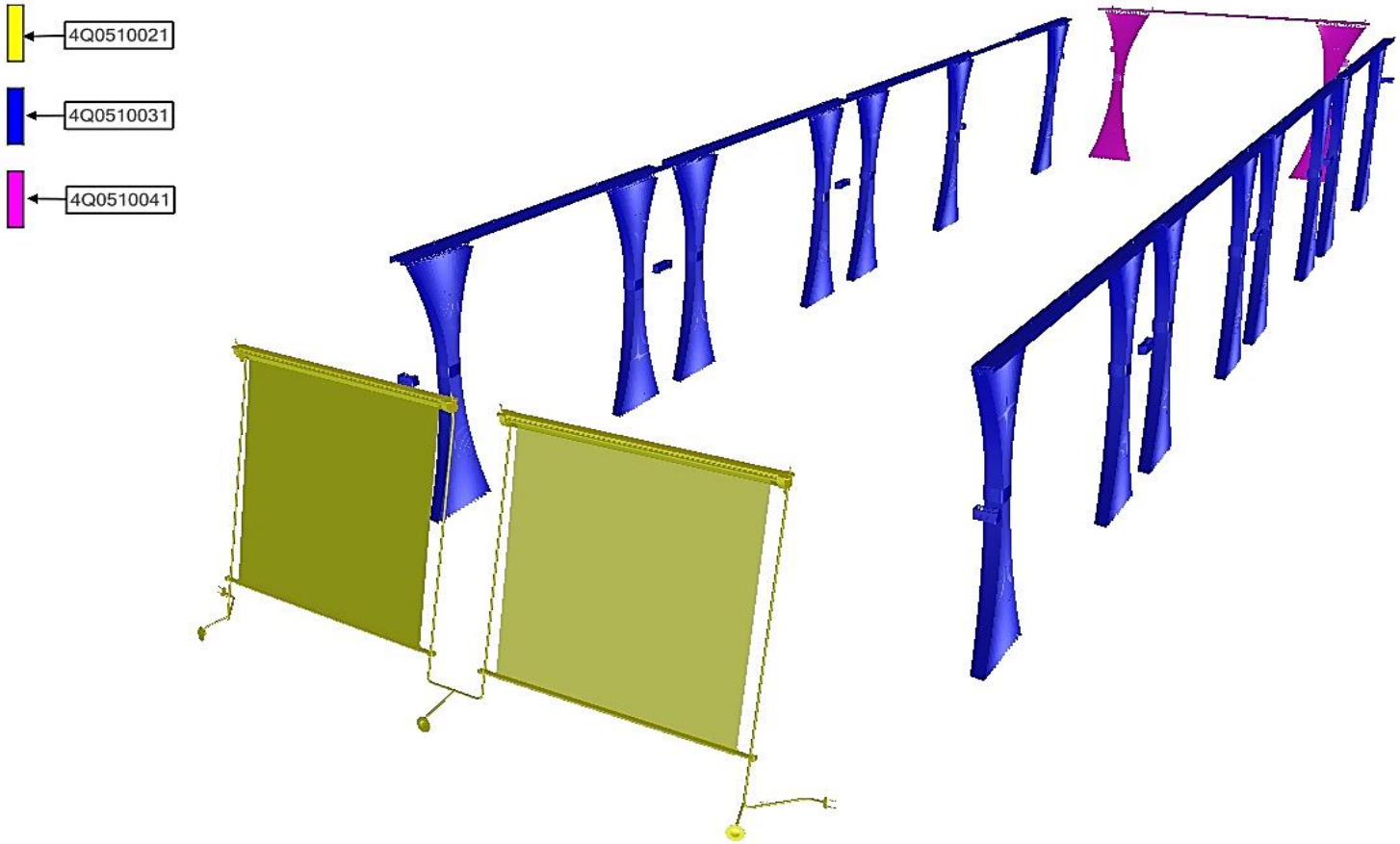

ASSB_NAME	PART NO.	NAME	QTY
CURTAIN ASSY	4Q0510041	REAR CURTAIN ASSY	1
	4Q0510031	SIDE CURTAIN ASSY	1
	4Q0510021	SUNVISOR ASSY	1

ASSB_NAME	PART NO.	NAME	QTY
CURTAIN ASSY			

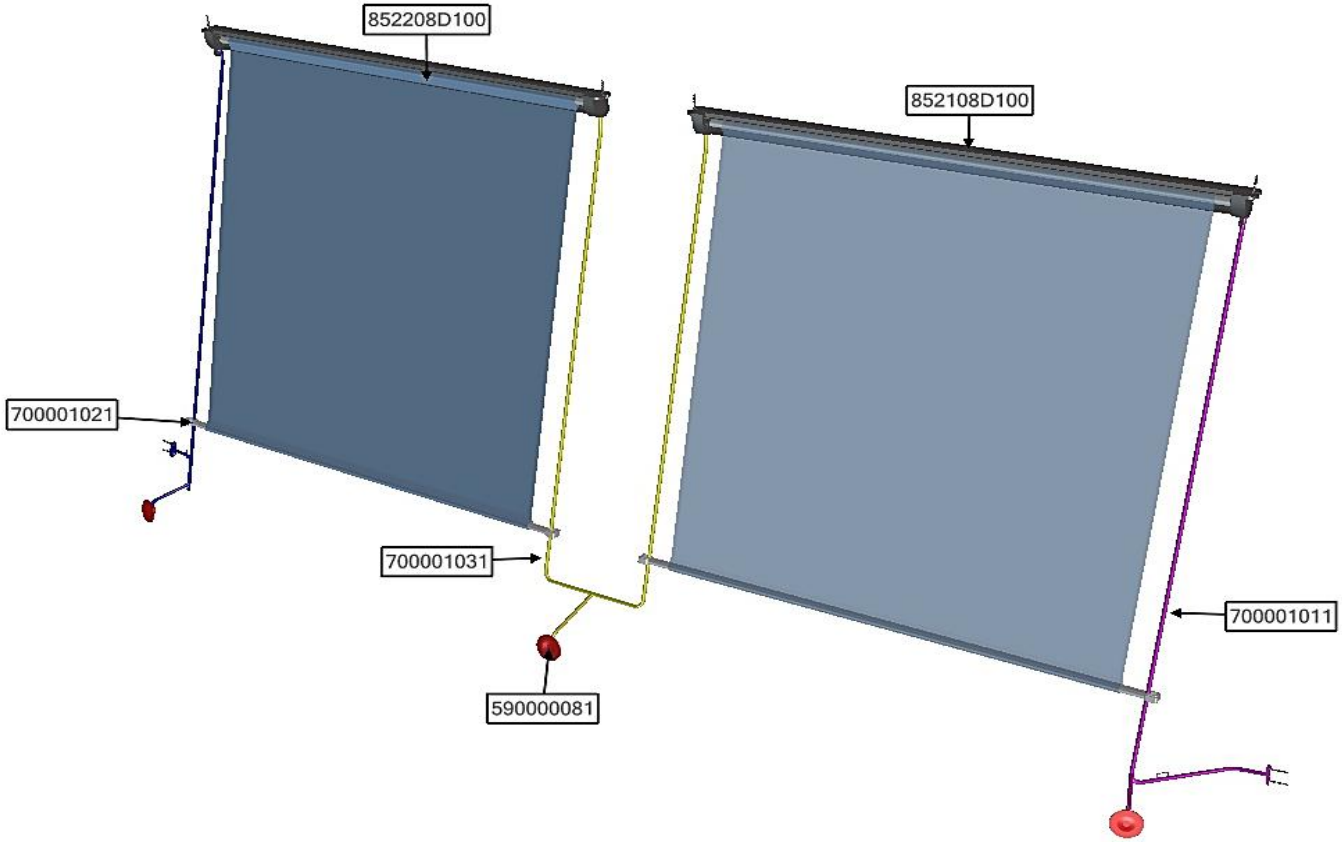

ASSB_NAME	PART NO.	NAME	QTY
SUNVISOR ASSY	852108D100	LH SUNVISOR	1
	852208D100	RH SUNVISOR	1
	590000081	VACUUM RUBBER	3
	700001011	GUIDE BAR	1
	700001021	GUIDE BAR	1
	700001031	GUIDE BAR	1

ASSB_NAME	PART NO.	NAME	QTY
SUNVISOR ASSY			

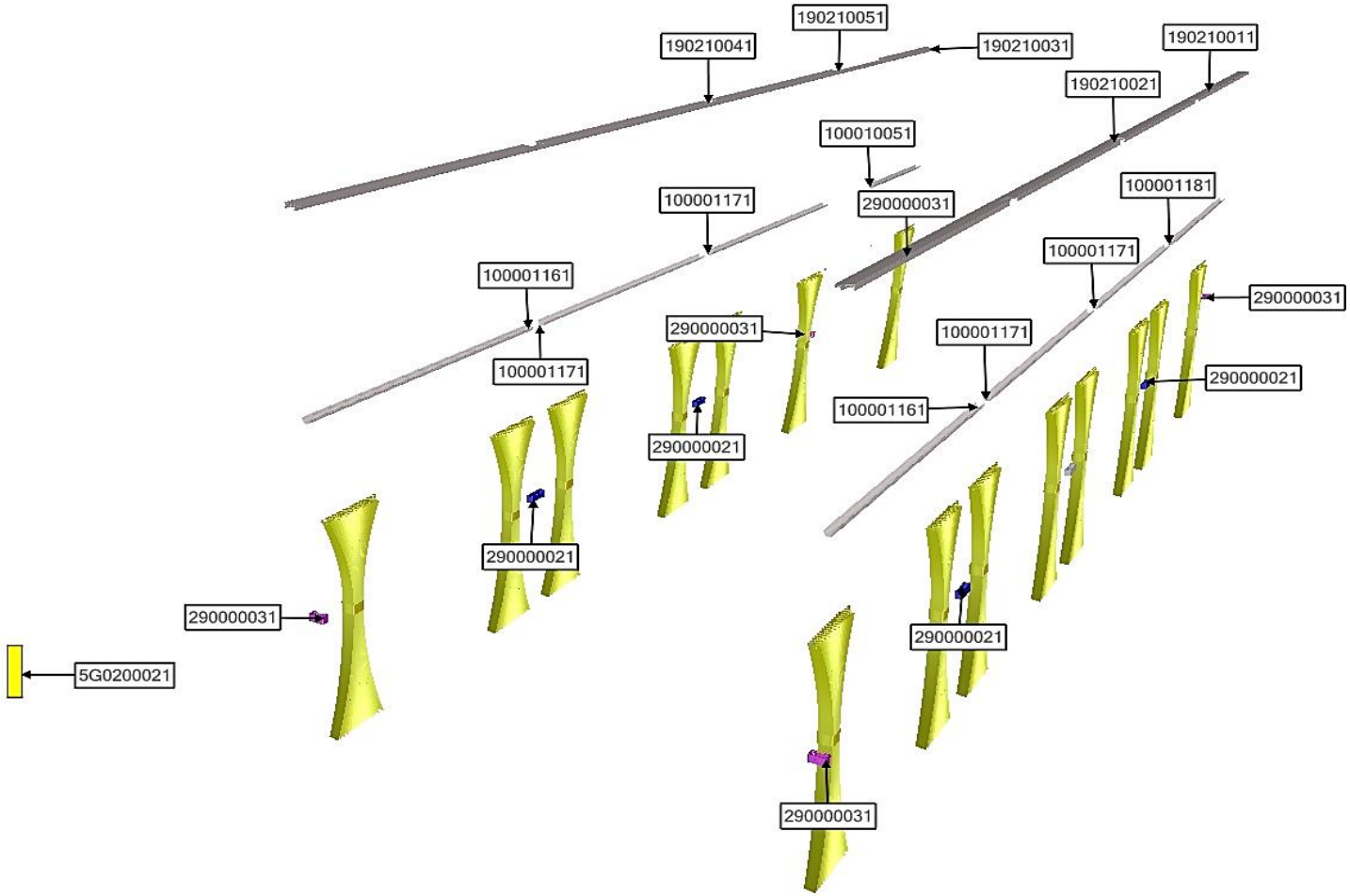

ASSB_NAME	PART NO.	NAME	QTY
SIDE CURTAIN ASSY	290000031	CURTAIN HOOK	5
	290000021	CURTAIN HOOK	4
	190210051	RH CURTAIN RAIL 03	1
	190210041	RH CURTAIN RAIL 02	1
	190210031	RH CURTAIN RAIL 01	1
	190210021	LH CURTAIN RAIL 02	1
	190210011	LH CURTAIN RAIL 01	1

ASSB_NAME	PART NO.	NAME	QTY
SIDE CURTAIN ASSY	100010051	CURTAIN LIGHT COVER 04	1
	100001181	CURTAIN LIGHT COVER 03	1
	100001171	CURTAIN LIGHT COVER 02	4
	100001161	CURTAIN LIGHT COVER 01	2
	5G0200021	CURTAIN ASSY	15

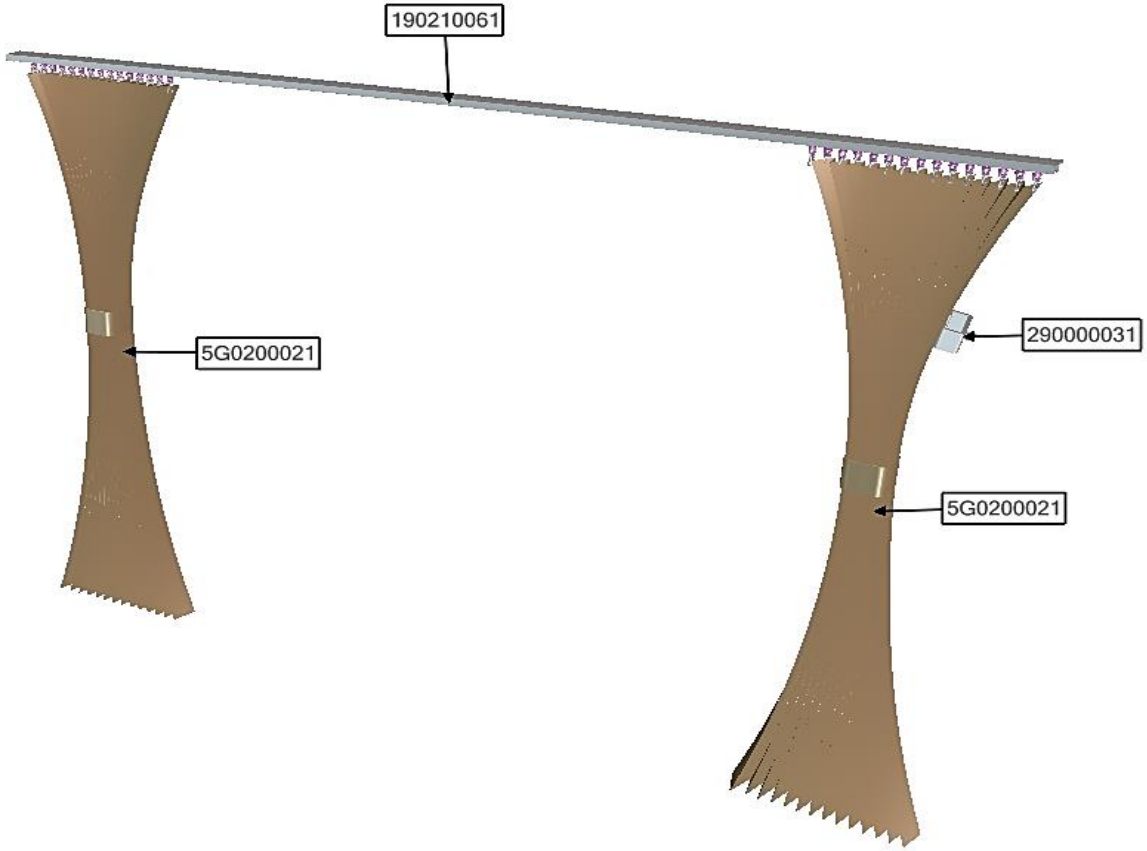

ASSB_NAME	PART NO.	NAME	QTY
REAR CURTAIN ASSY	411001-08119NN	ỐP LA PHÔNG ĐẦU	1
	411005-08135NN	ỐP KỆ HÀNH LÝ BÊN PHẢI	1
	411004-08135NN	ỐP KỆ HÀNH LÝ BÊN TRÁI	1
	928088A360	ĐÈN TÀI XẾ	2
	945208D000	ĐỒNG HỒ GIỜ	1
	411003-08119NN	ỐP TRỤ KÍNH BÊN LƠ	1
	411002-08119NN	ỐP TRỤ KÍNH BÊN TÀI	1

ASSB_NAME	PART NO.	NAME	QTY
REAR CURTAIN ASSY			

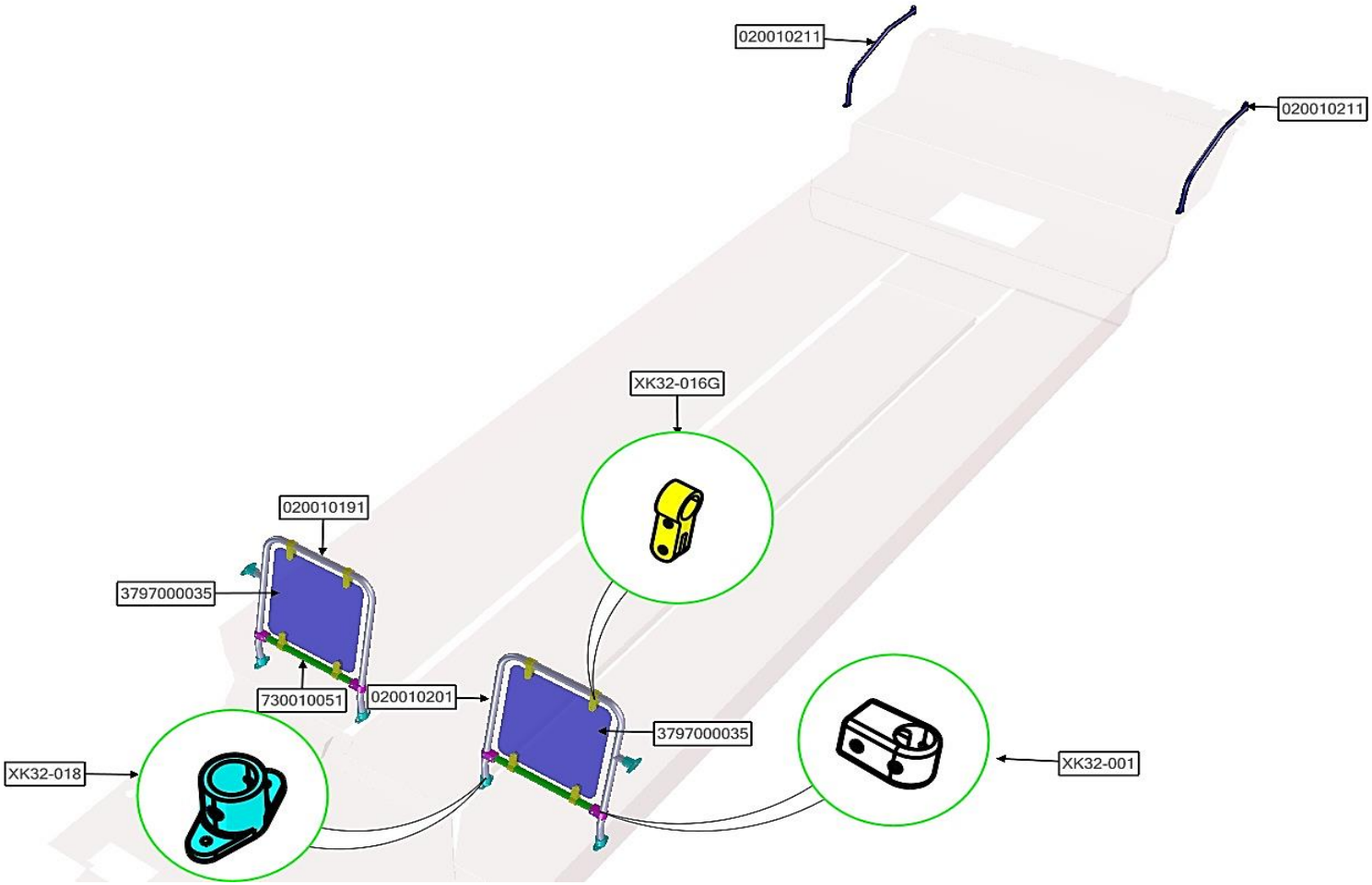

ASSB_NAME	PART NO.	NAME	QTY
HANDRAIL ASSY	020010191	PARTITION FRAME 01	1
	020010201	PARTITION FRAME 02	1
	020010211	STAINLESS HANDRAILS	2
	730010051	STAINLESS HANDRAIL 04	2
	3797000035	PARTITION 01	2
	XK32-001	POST MOUNTING	4
	XK32-016G	PARTITION CLAMPS	8

ASSB_NAME	PART NO.	NAME	QTY
HANDRAIL ASSY	XK32-018	HANDRAIL POST MOUNT	6

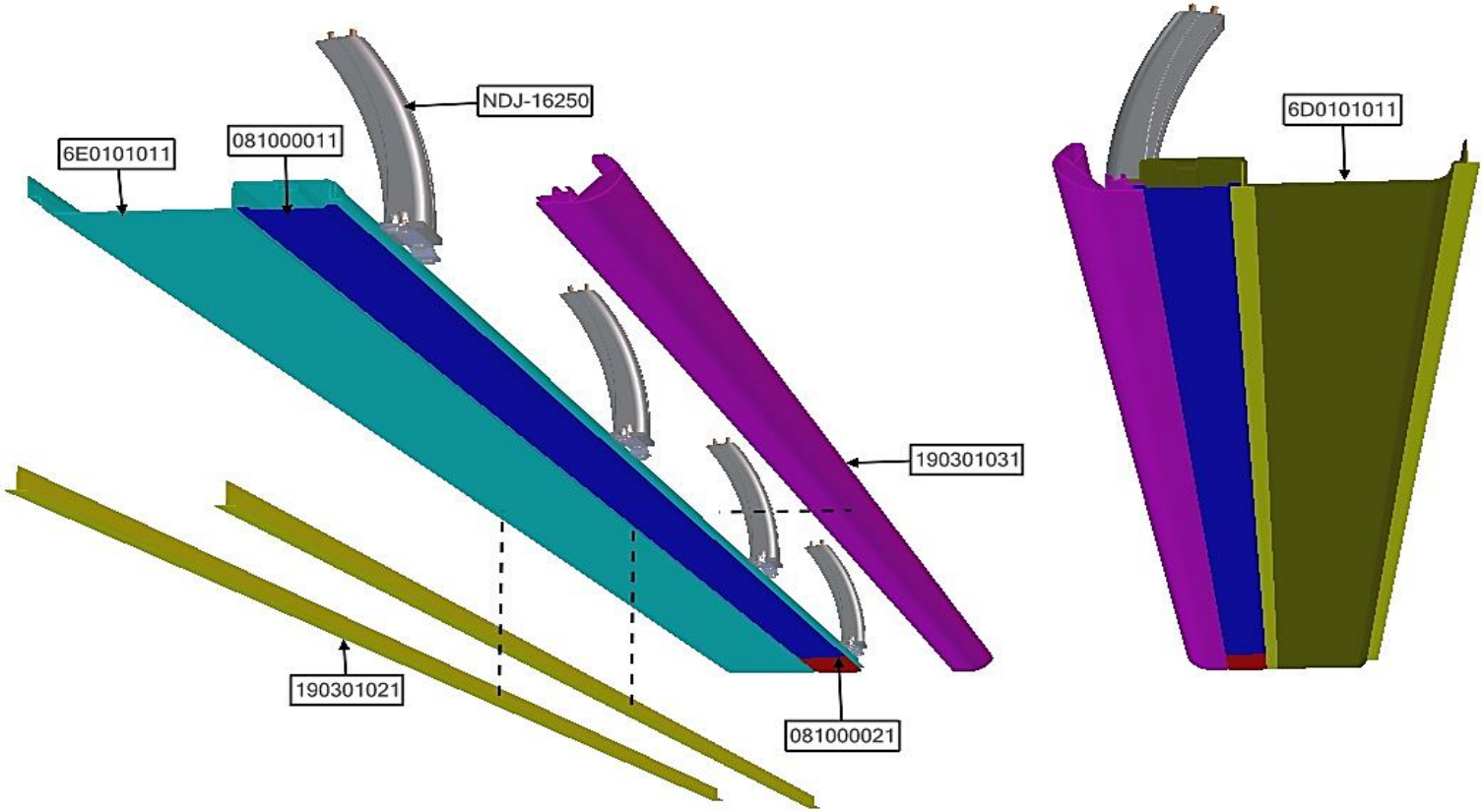

ASSB_NAME	PART NO.	NAME	QTY
LUGGAGE SHELVES ASSY	6D0101011	LH LUGGAGE SHELVES ASSY	1
	6E0101011	RH LUGGAGE SHELVES ASSY	1
	081000011	MICA COVER 01	10
	081000021	MICA COVER 02	2
	190301021	T-SHAPED MOULDING	4
	190301031	LUGGAGE RACK RAIL	1
	190301031	LUGGAGE RACK RAIL	1

ASSB_NAME	PART NO.	NAME	QTY
LUGGAGE SHELVES ASSY	NDJ-16250	LUGGAGE SHELVES BRACKET	8

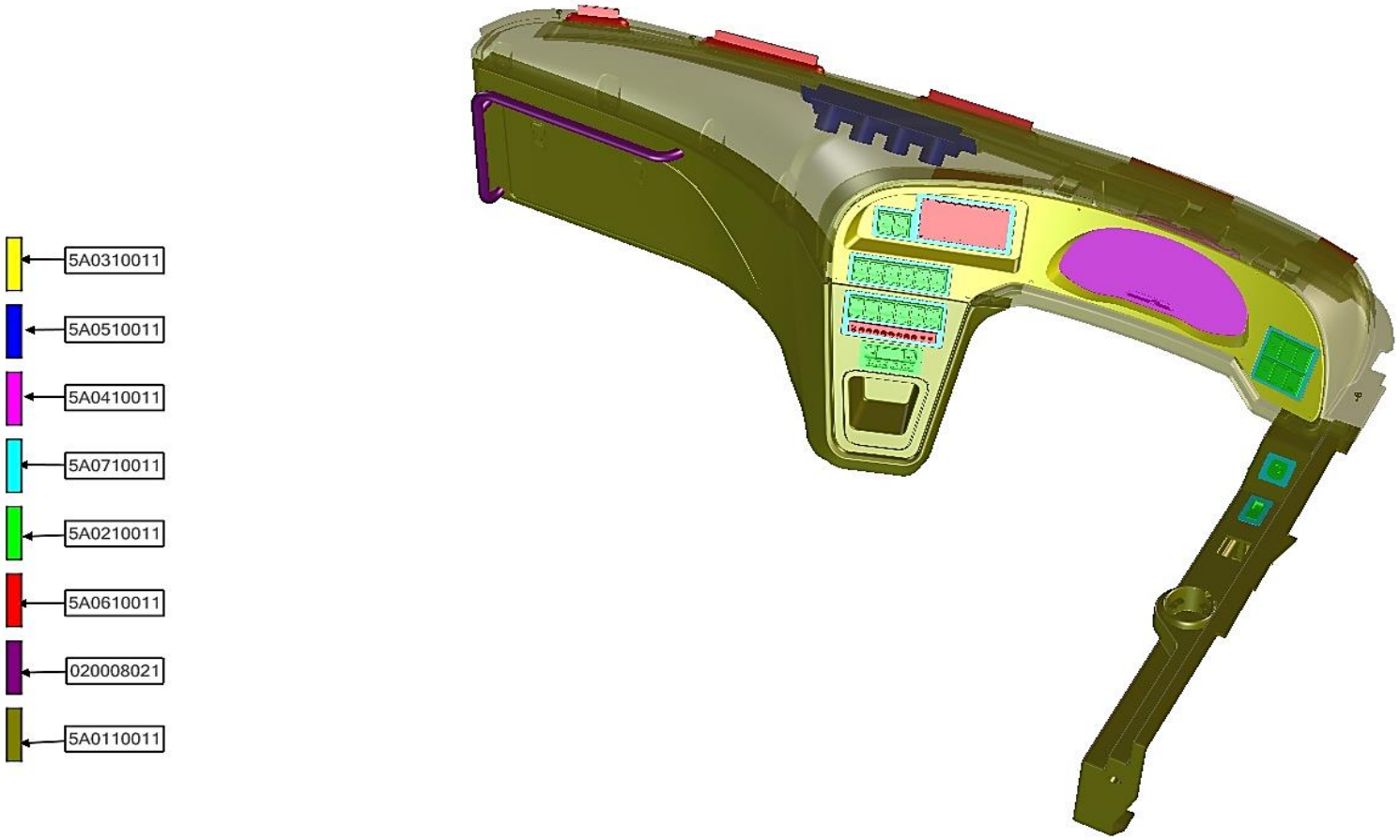

ASSB_NAME	PART NO.	NAME	QTY
DASHBOARD ASSY	5A0110011	DASHBOARD ASSY	1
	5A0210011	SWITCHES ASSY	1
	5A0310011	CLOCK DASHBOARD BORDER	1
	5A0410011	DASHBOARD LOCK ASSY	1
	5A0510011	MECHANICAL COMPONENT SET	1
	5A0610011	MINOR ITEMS	1
	5A0710011	SWITCH SUPPORT ASSY	1

ASSB_NAME	PART NO.	NAME	QTY
DASHBOARD ASSY	020008021	DASHBOARD HANDRAIL	1

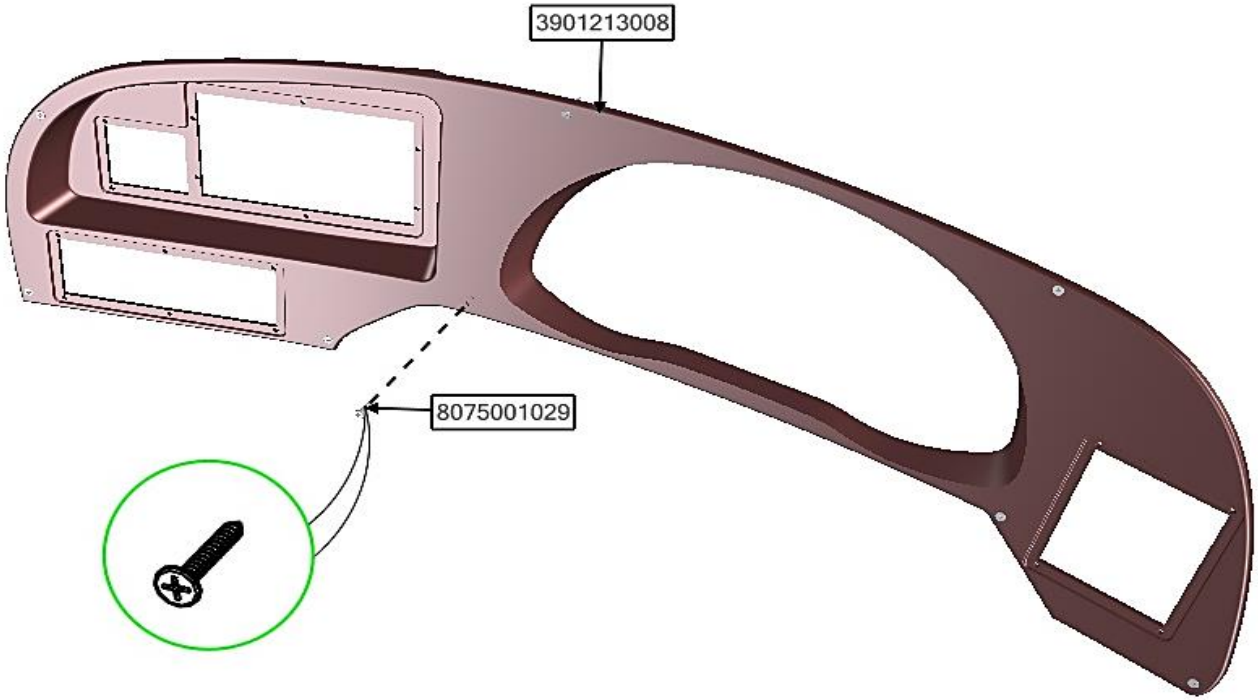

ASSB_NAME	PART NO.	NAME	QTY
CLOCK DASHBOARD BORDER	3901213008	DASHBOARD BORDER	1
	8075001029	SCREW 03520	1

ASSB_NAME	PART NO.	NAME	QTY
CLOCK DASHBOARD BORDER			

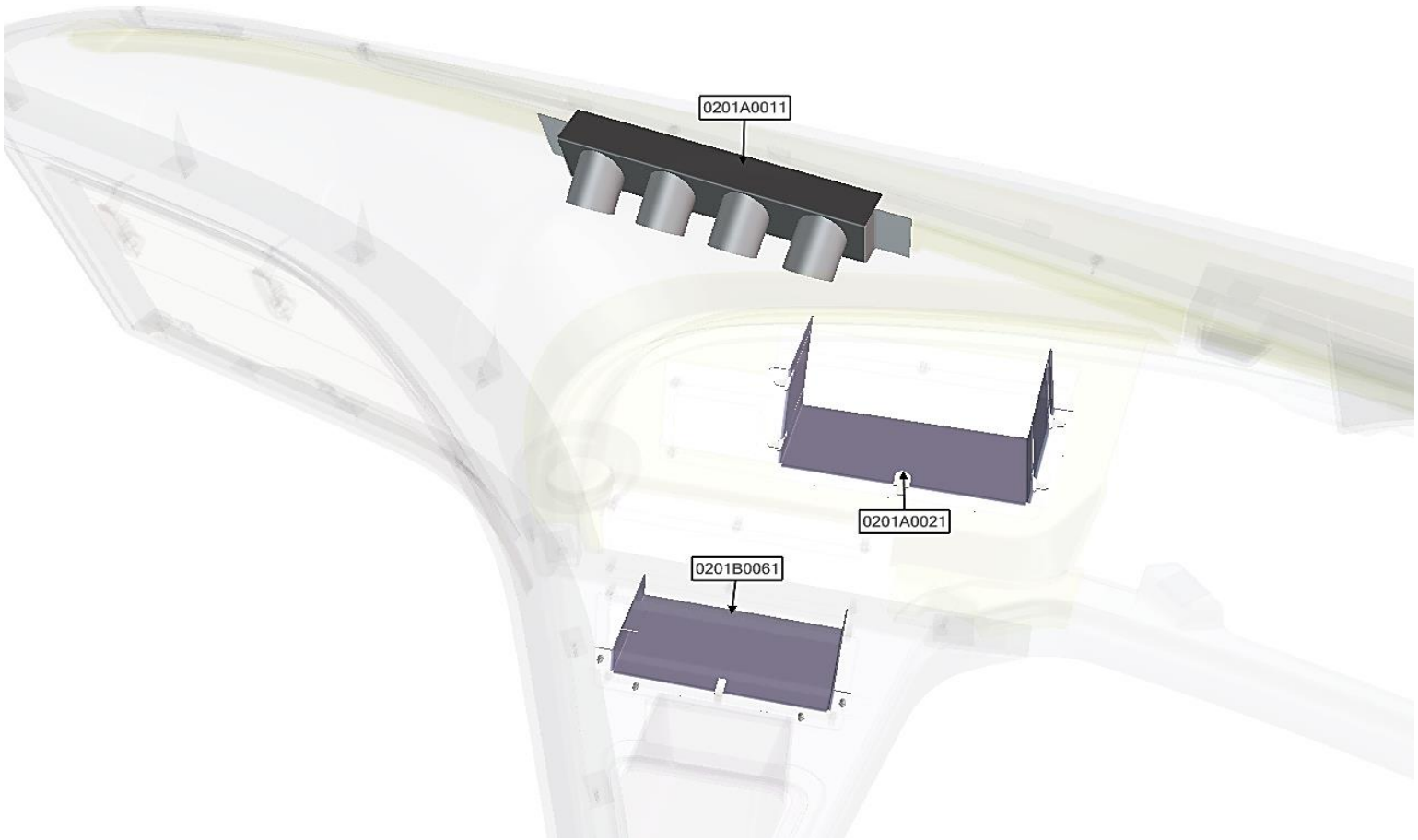

ASSB_NAME	PART NO.	NAME	QTY
MECHANICAL COMPONENT SET	0201A0011	HEATING DOOR	1
	0201A0021	ANDROID DVD BRACKET	1
	0201B0061	MIXER BRACKET	1

ASSB_NAME	PART NO.	NAME	QTY
MECHANICAL COMPONENT SET			

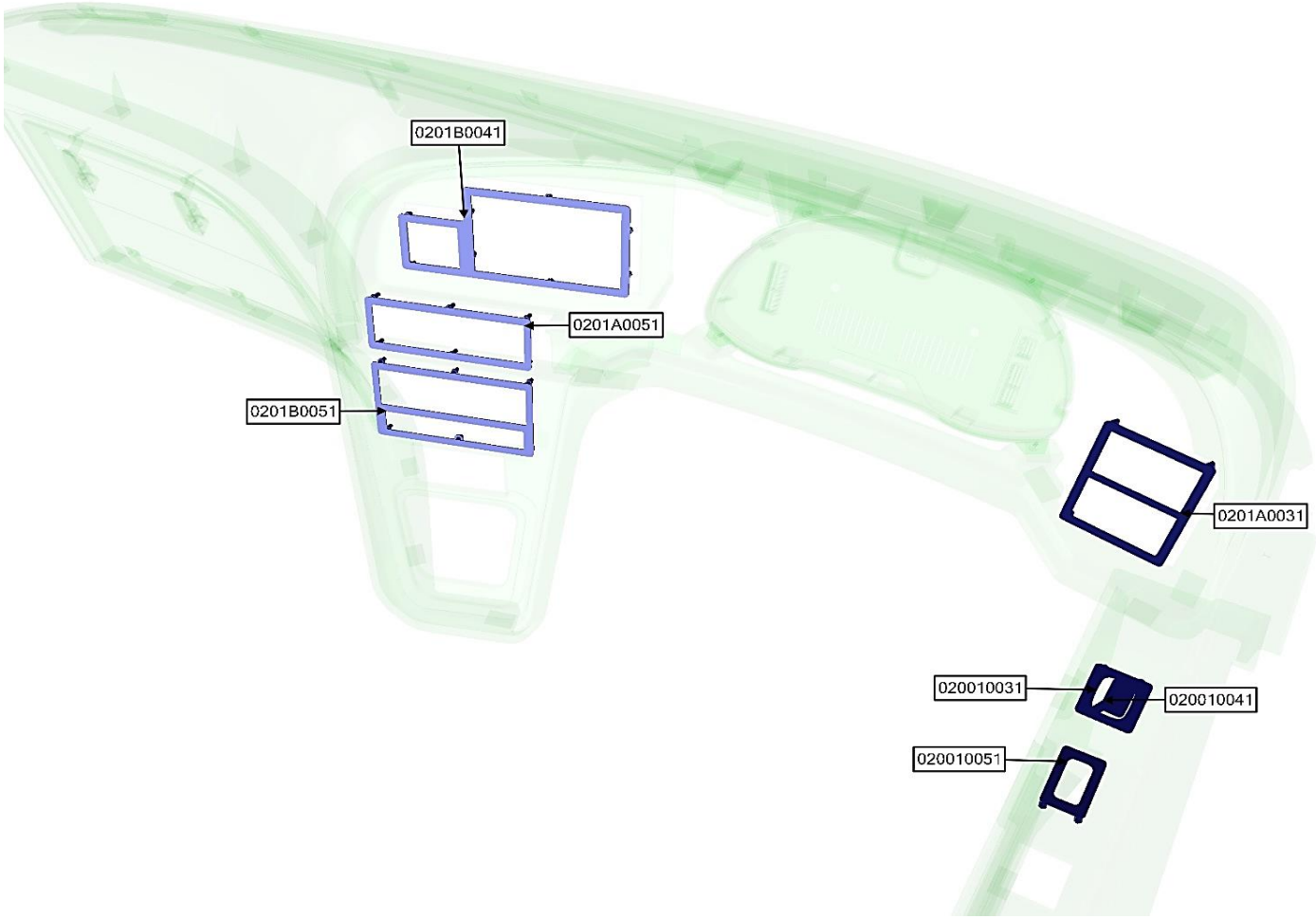

ASSB_NAME	PART NO.	NAME	QTY
SWITCH SUPPORT ASSY	0201A0031	SWITCH SUPPORT 01	1
	0201A0051	SWITCH SUPPORT 03	1
	0201B0041	SWITCH SUPPORT 02	1
	0201B0051	SWITCH SUPPORT 05	1
	020010031	SWITCH SUPPORT 04	1
	020010041	SWITCH SUPPORT 06	1
	020010051	SWITCH SUPPORT 07	1

ASSB_NAME	PART NO.	NAME	QTY
SWITCH SUPPORT ASSY			

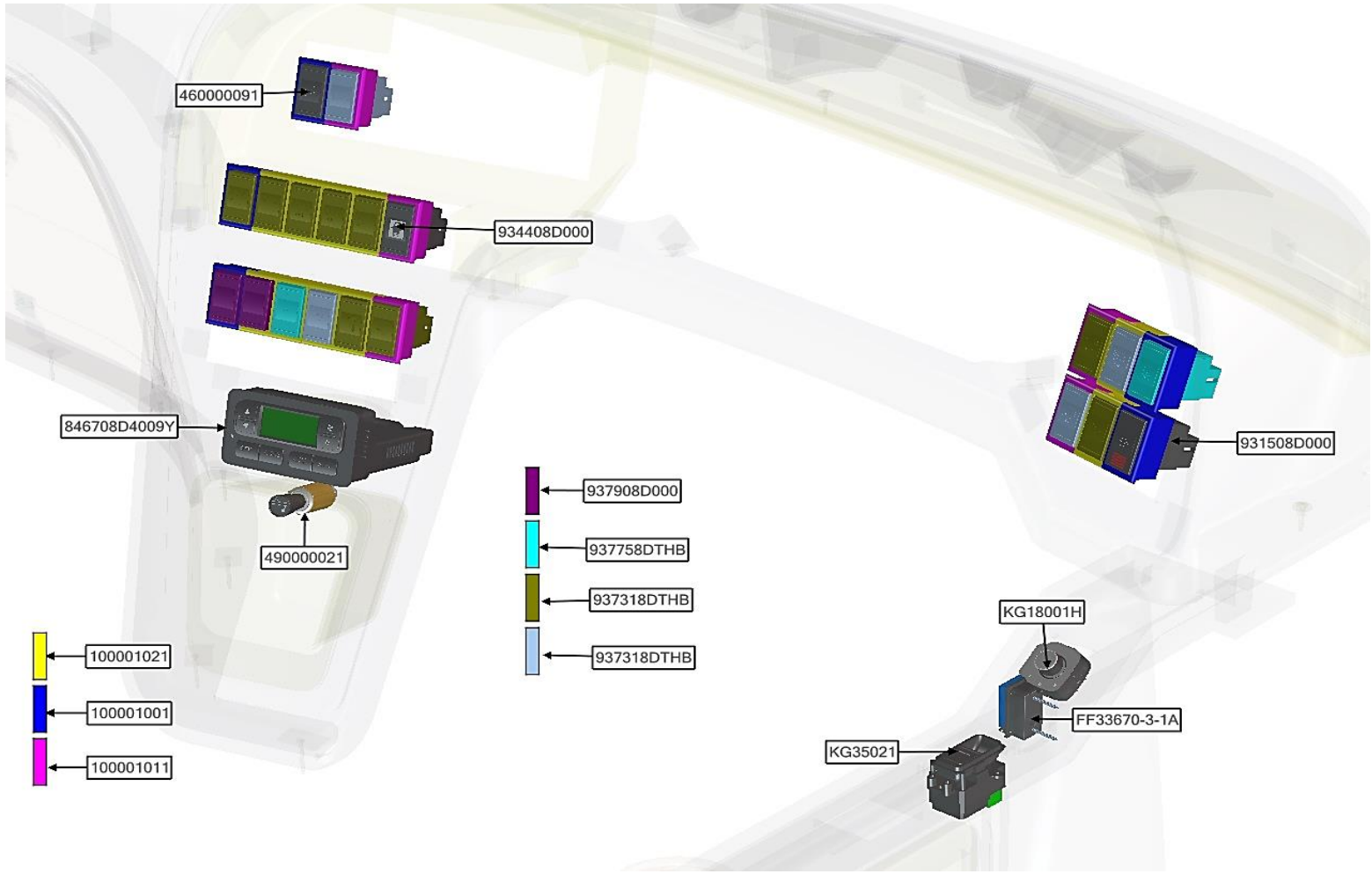

ASSB_NAME	PART NO.	NAME	QTY
SWITCHES ASSY	KG35021	GLASS LIFTING SWITCH	1
	KG18001H	REAR VIEW MIRROR SWITCH	1
	FF33670-3-1A	FIRE FIGHTING SWITCH	1
	490000021	CIGARETTE LIGHTER	1
	460000091	FAN SWITCH	1
	100001021	MIDDLE SWITCH MOUNTING	10
	100001011	LH SWITCH MOUNTING	5

ASSB_NAME	PART NO.	NAME	QTY
SWITCHES ASSY	100001001	RH SWITCH MOUNTING	5
	937908D000	AUXILIARY SWITCH	2
	937758DTHB	MIRROR DRYING SWITCH	1
	937758DTHB	ABS SWITCH	1
	937318DTHB	SWITCH	9
	937318DTHB	SWITCH	3
	937318DTHB	SLEEPING LAMP SWITCH	1

ASSB_NAME	PART NO.	NAME	QTY
SWITCHES ASSY	934408D000	DOOR CONTROLLING SWITCH	1
	931508D000	POWER SWITCH	1
	846708D4009Y	A/C SWITCH BOX	1

ASSB_NAME	PART NO.	NAME	QTY
SWITCHES ASSY			

ASSB_NAME	PART NO.	NAME	QTY
MAIN DASHBOARD	3602015001	MAIN DASHBOARD	1
	5B0310011	SUB-DASHBOARD DASHBOARD	1
	5B0210011	PARTITION ASSY	1

ASSB_NAME	PART NO.	NAME	QTY
MAIN DASHBOARD			

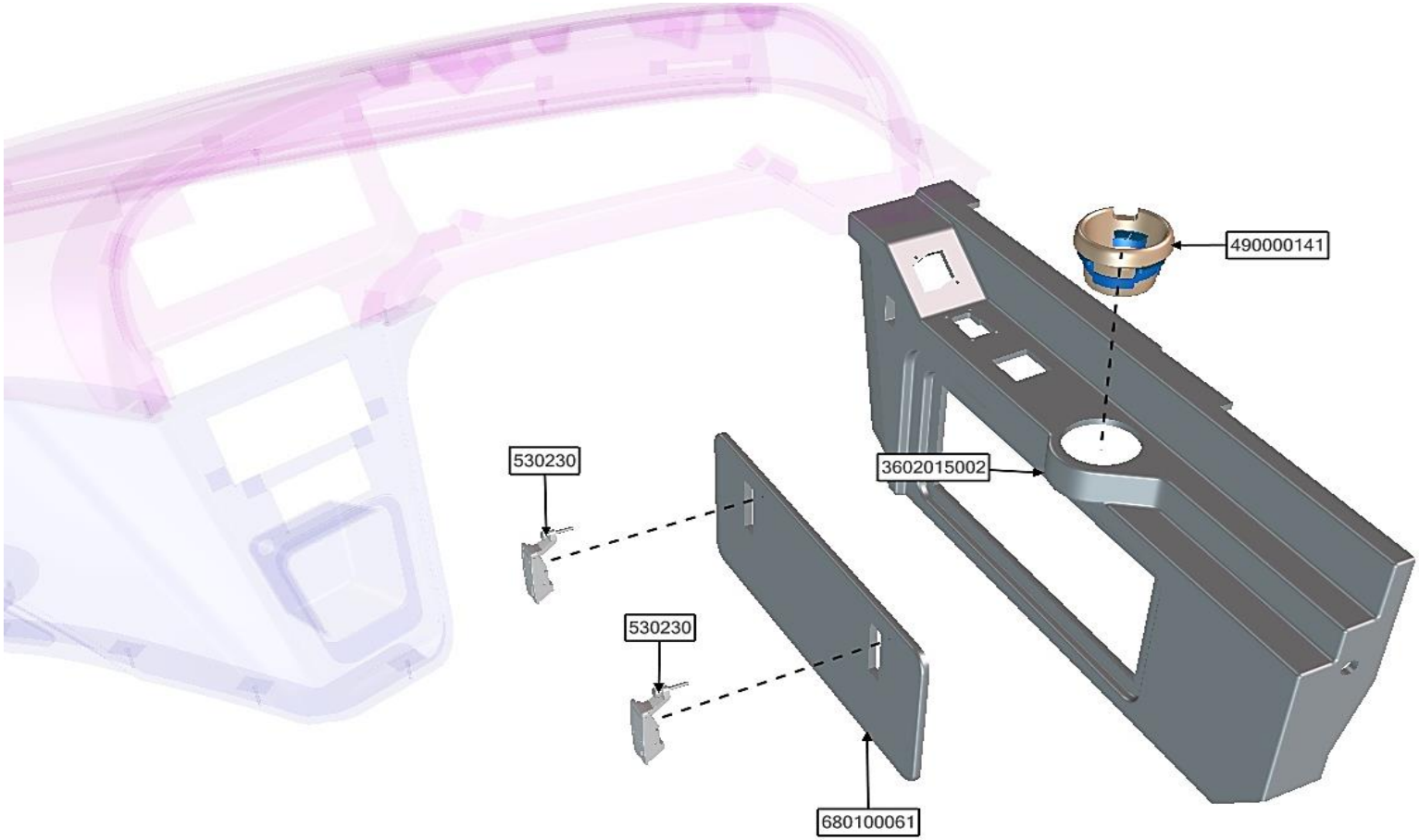

ASSB_NAME	PART NO.	NAME	QTY
SUB-DASHBOARD DASHBOARD	3602015002	SUB DASHBOARD	1
	680100061	SUB DASHBOARD CAP	1
	490000141	CUP HOLDER COAT	1
	530230	DASHBOARD LATCH	2

ASSB_NAME	PART NO.	NAME	QTY
SUB-DASHBOARD DASHBOARD			

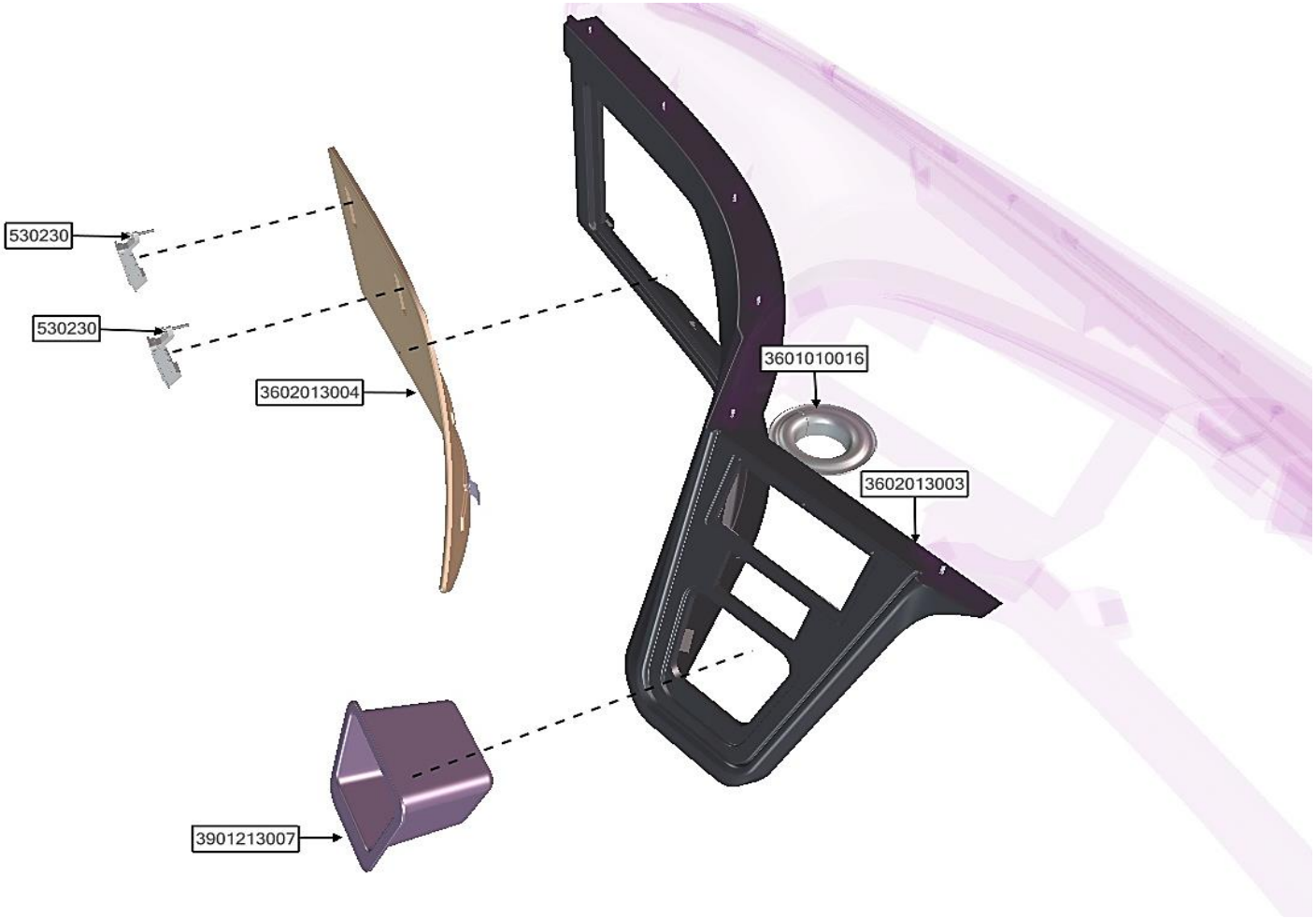

ASSB_NAME	PART NO.	NAME	QTY
PARTITION ASSY	3901213007	FILE BOX	1
	3602013004	PARTITION COVER	1
	3602013003	DASHBOARD PARTITION	1
	3601010016	WIRING COVER	1
	530230	DASHBOARD LATCH	2

ASSB_NAME	PART NO.	NAME	QTY
PARTITION ASSY			

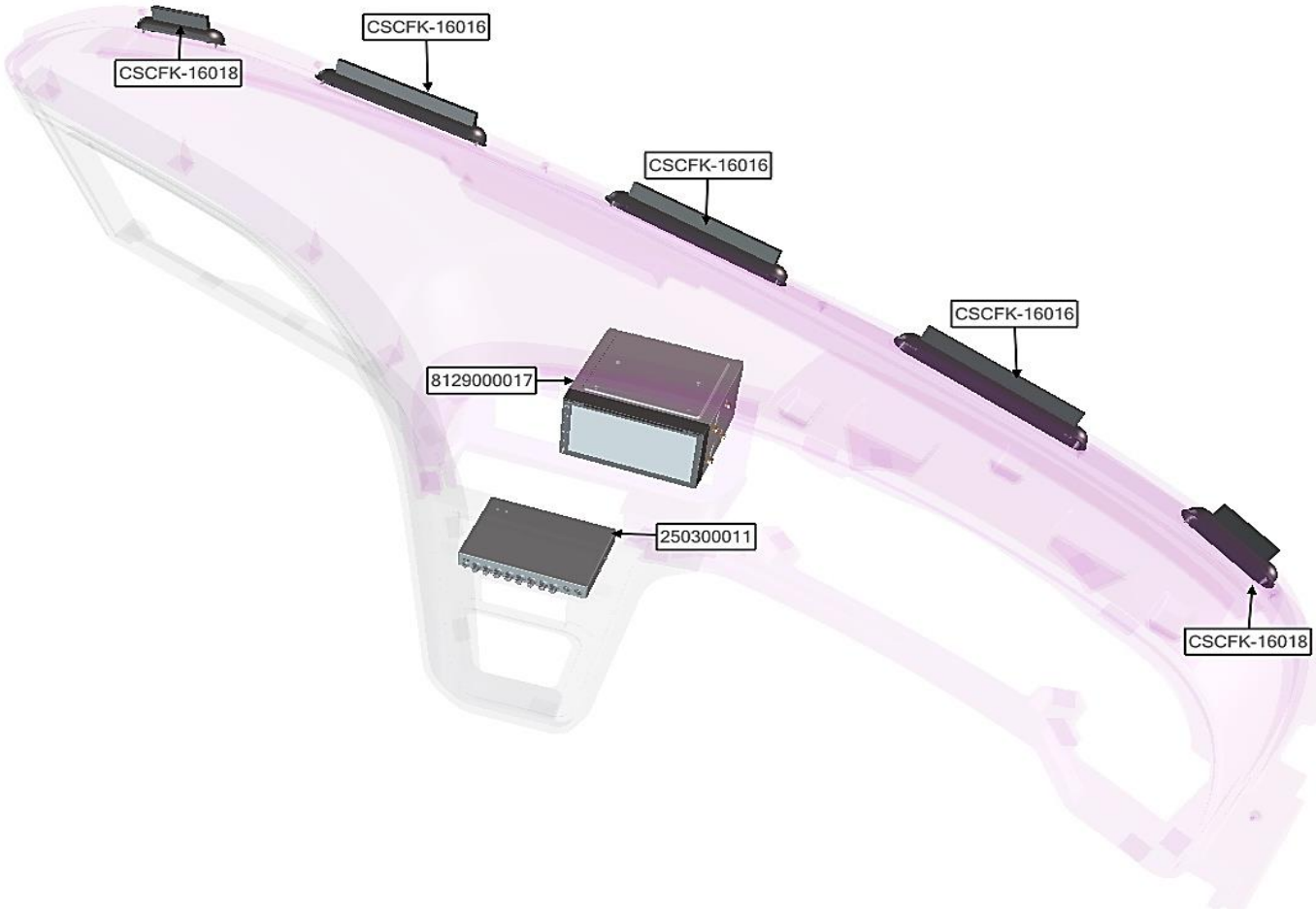

ASSB_NAME	PART NO.	NAME	QTY
MINOR ITEMS	CSCFK-16018	GLASS DRYING WIND DOOR	2
	CSCFK-16016	GLASS DRYING WIND DOOR	3
	8129000017	ANDROID DVD	1
	250300011	MIXER	1

ASSB_NAME	PART NO.	NAME	QTY
MINOR ITEMS			

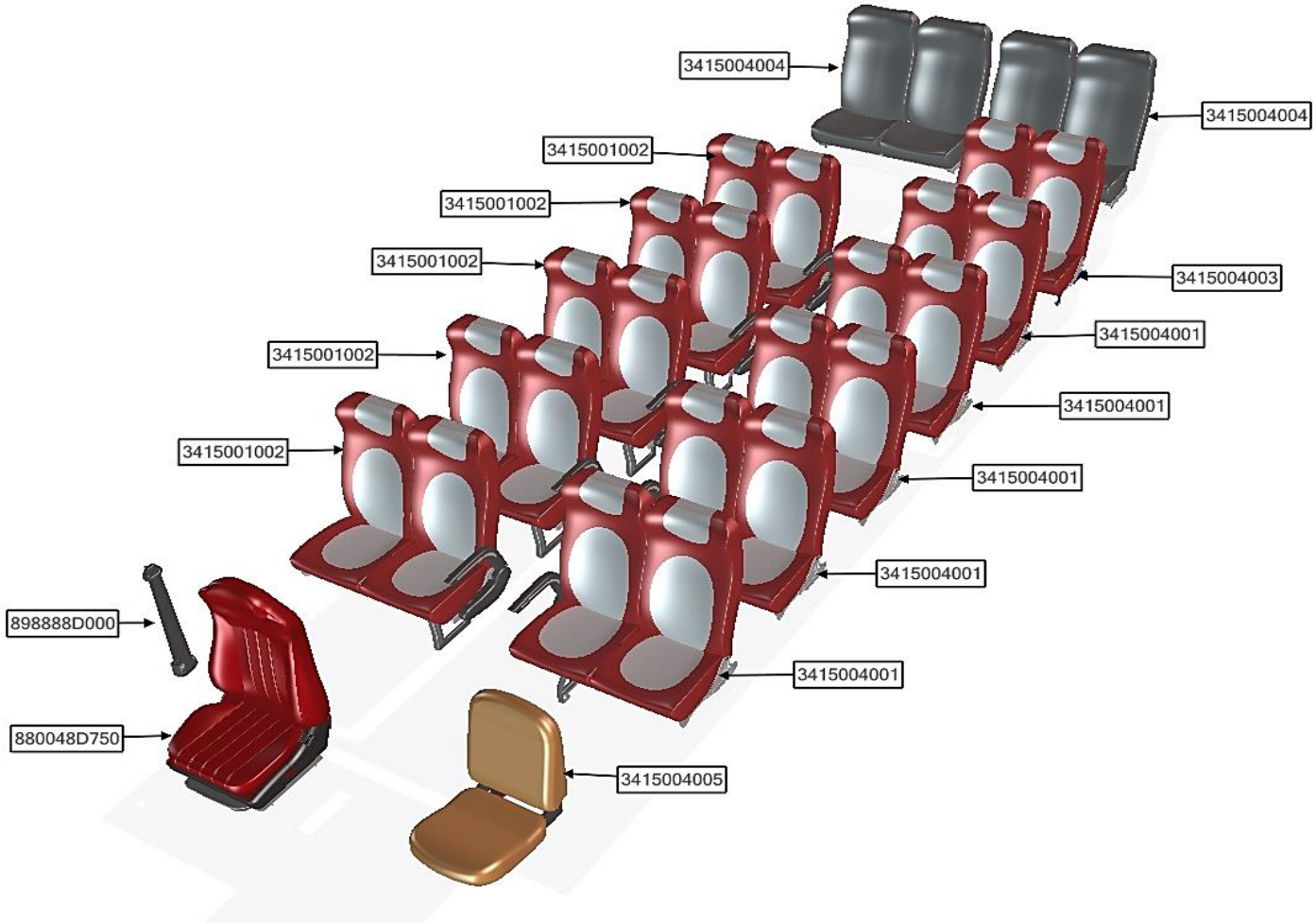

ASSB_NAME	PART NO.	NAME	QTY
SEATS	3415004005	GUIDE SEATS	1
	3415004004	REAR DOUBLE SEATS	2
	3415004003	LH DOUBLE SEATS 02	1
	3415004001	LH DOUBLE SEATS 01	5
	3415001002	RH DOUBLE SEATS	5
	898888D000	SEAT BELT	1
	880048D750	DRIVER SEAT	1

ASSB_NAME	PART NO.	NAME	QTY
SEATS			

ASSB_NAME	PART NO.	NAME	QTY
RH DOUBLE SEATS	27303-B4100	PASSENGER SEAT HANDRAIL	1
	24205-B41O0	HANDRAIL COVER, RH SEATS	1

ASSB_NAME	PART NO.	NAME	QTY
RH DOUBLE SEATS			

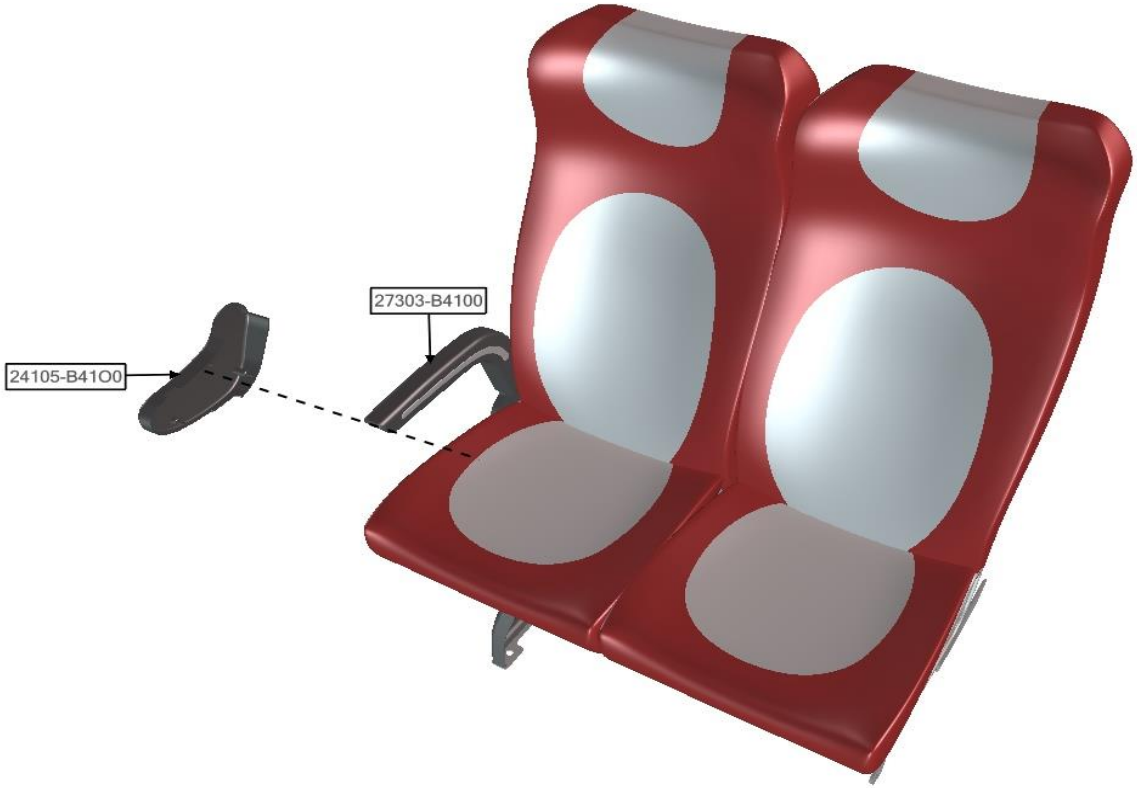

ASSB_NAME	PART NO.	NAME	QTY
LH DOUBLE SEATS 01	27303-B4100	PASSENGER HANDRAIL	1
	24105-B41O0	HANDRAIL COVER, LH SEATS	1

ASSB_NAME	PART NO.	NAME	QTY
LH DOUBLE SEATS 01			

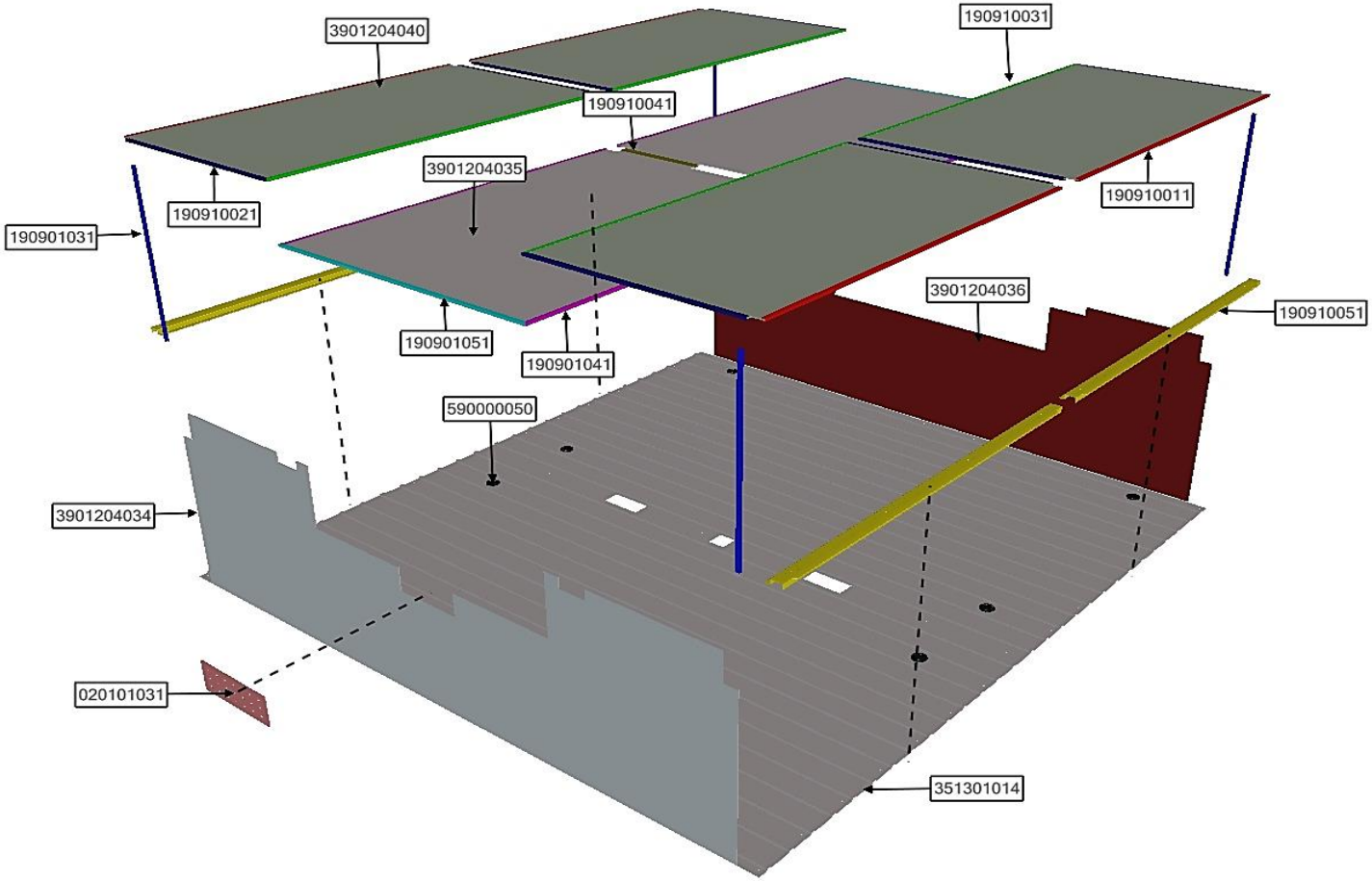

ASSB_NAME	PART NO.	NAME	QTY
LUGGAGE COMPARTMENT	3901204040	LUGGAGE COMPARTMENT PANEL 04	4
	3901204036	LUGGAGE COMPARTMENT PANEL 03	1
	3901204035	LUGGAGE COMPARTMENT PANEL 02	2
	3901204034	LUGGAGE COMPARTMENT PANEL01	1
	590000050	DRAIN RUBBER	8
	351301014	STAINLESS STEEL SHEET	2
	190910051	LUGGAGE ALUMINUM MOULDING	4
	20101031	LUGGAGE COMPARTMENT CAP	1

ASSB_NAME	PART NO.	NAME	QTY
LUGGAGE COMPARTMENT	190910041	LUGGAGE ALUMINUM MOULDING 07	4
	190910031	LUGGAGE ALUMINUM MOULDING 06	4
	190910021	LUGGAGE ALUMINUM MOULDINGG 05	8
	190910011	LUGGAGE ALUMINUM MOULDING 04	4
	190901051	LUGGAGE ALUMINUM MOULDING 03	2
	190901041	LUGGAGE ALUMINUM MOULDING 02	4
	190901031	LUGGAGE ALUMINUM MOULDING 01	4

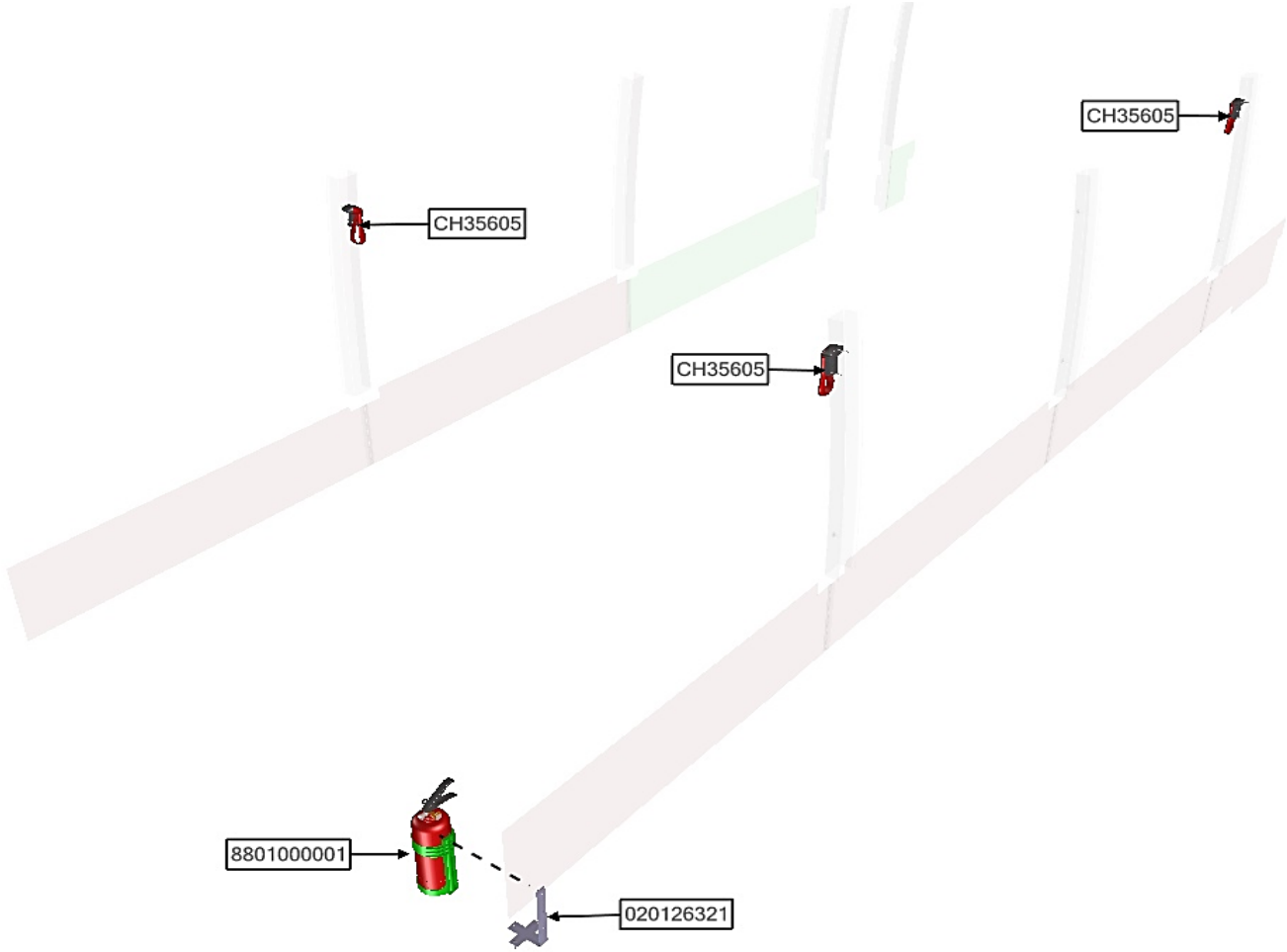

ASSB_NAME	PART NO.	NAME	QTY
SAFETY SYSTEM	CH35605	EXIT HAMMER	3
	8801000001	FIRE EXTINGUISHER 2KG	1
	020126321	FIRE EXTINGUISHER BRACKET	1

ASSB_NAME	PART NO.	NAME	QTY
SAFETY SYSTEM			

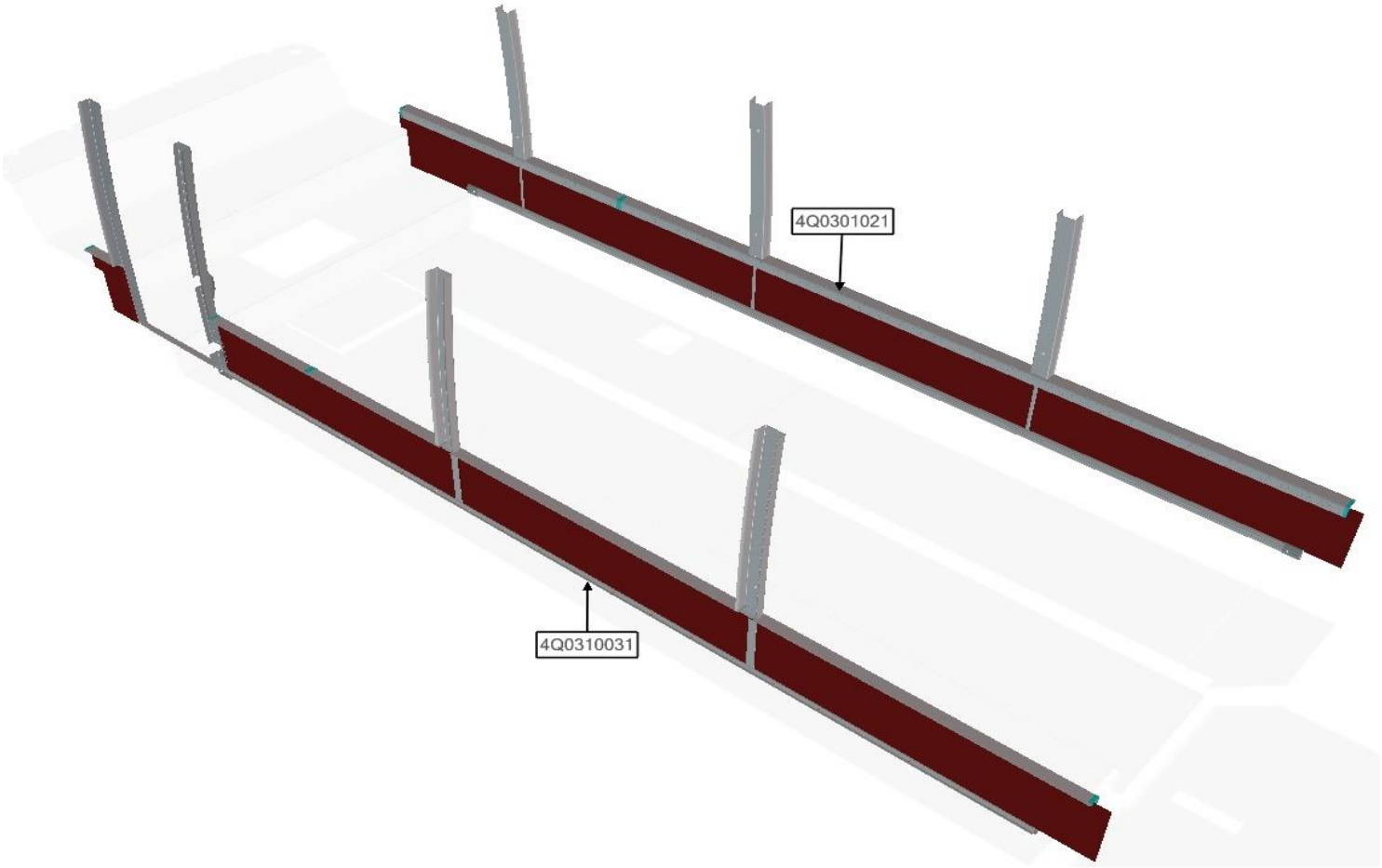

ASSB_NAME	PART NO.	NAME	QTY
SIDE BODY	4Q0310031	RH SIDE BODY	1
	4Q0301021	LH SIDE BODY	1

ASSB_NAME	PART NO.	NAME	QTY
SIDE BODY			

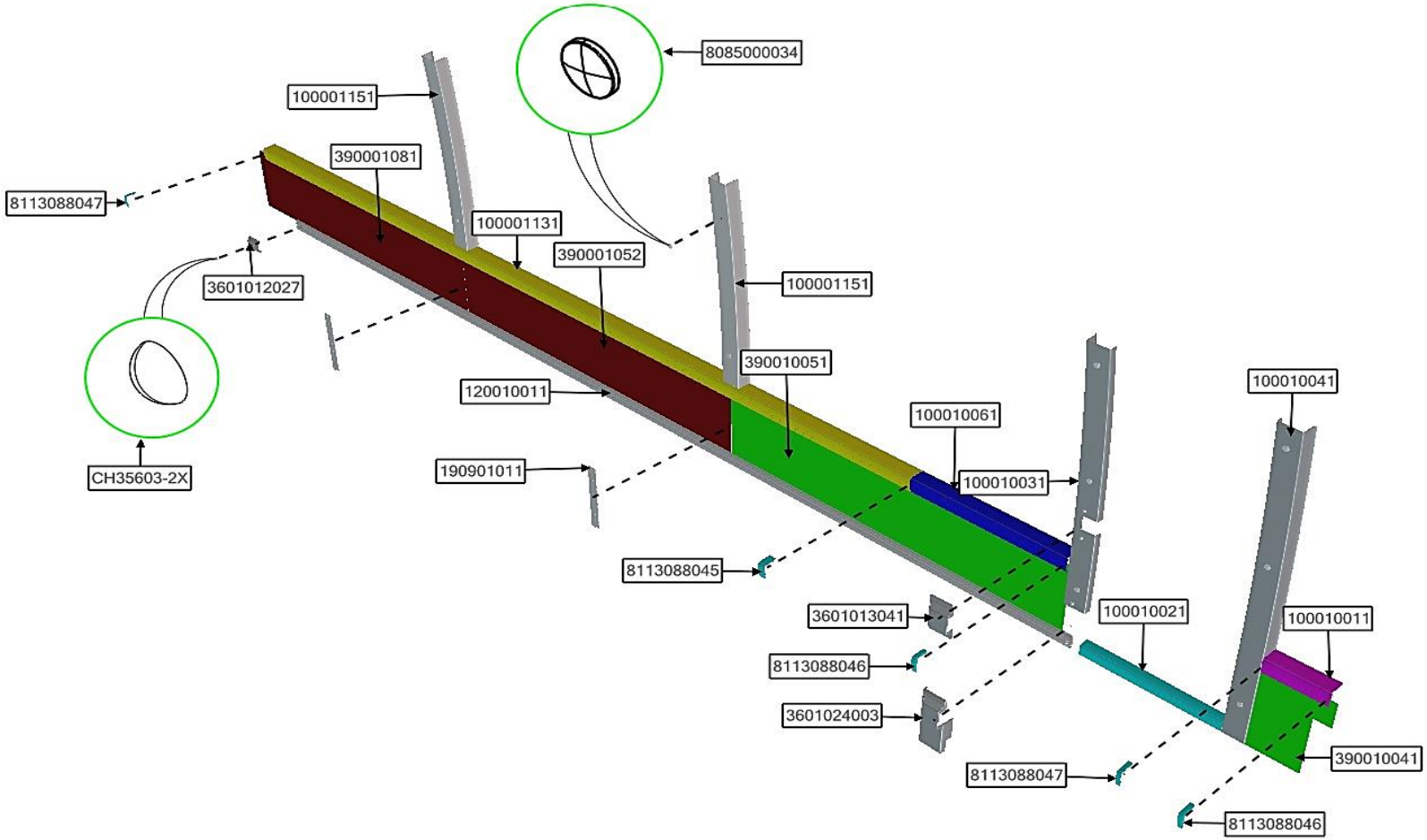

ASSB_NAME	PART NO.	NAME	QTY
RH SIDE BODY	CH35603-2X	SCREW CAP	1
	8113088047	LH HORIZONTAL COVER CONNECTOR	2
	8113088046	RH HORIZONTAL COVER CONNECTOR	2
	8113088045	MIDDLE COVER CONNECTOR	1
	8085000034	SCREW CAP	1
	3601024003	HINGE COVER 02	1
	3601013041	HINGE COVER 01	1

ASSB_NAME	PART NO.	NAME	QTY
RH SIDE BODY	3601012027	SEAT RAIL COVER	1
	390010051	RH INTERIOR PANEL 03	1
	390010041	RH INTERIOR PANEL 01	1
	390001081	RH INTERIOR PANEL 02	1
	390001052	LH INTERIOR PANEL 02	1
	190901011	INTERIOR PANEL MOULDING	2
	120010011	SIDE SEAT RAIL 01	1

ASSB_NAME	PART NO.	NAME	QTY
RH SIDE BODY	100010061	RH HORIZONTAL COVER 02	1
	100010041	VERTICAL PILLAR COVER 03	1
	100010031	VERTICAL PILLAR COVER 02	1
	100010021	RH HORIZONTAL COVER 04	1
	100010011	RH HORIZONTAL COVER 03	1
	100001151	VERTICAL PILLAR COVER	2
	100001131	RH HORIZONTAL COVER 01	1

ASSB_NAME	PART NO.	NAME	QTY
RH SIDE BODY			

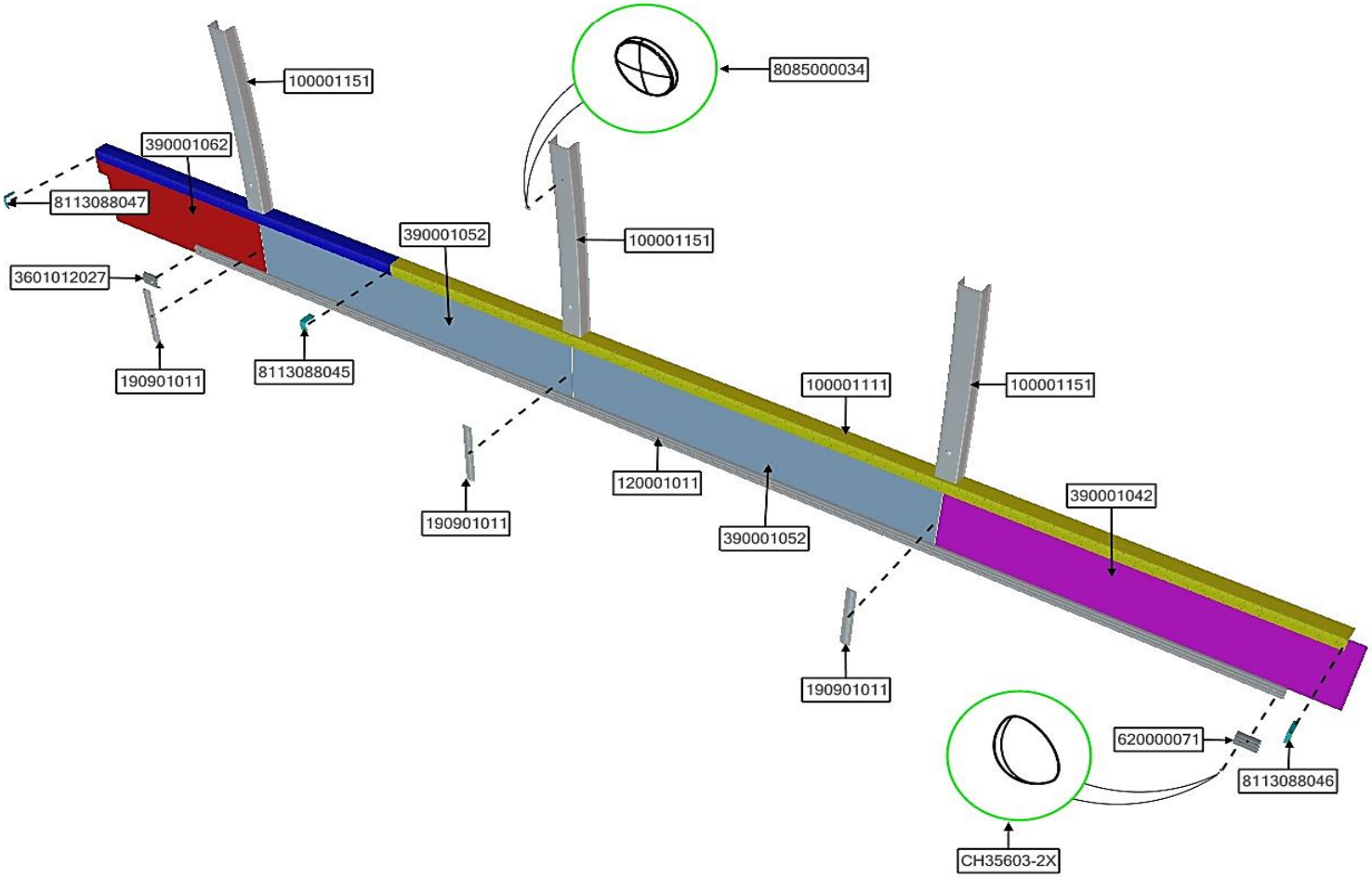

ASSB_NAME	PART NO.	NAME	QTY
LH SIDE BODY	CH35603-2X	SCREW CAP	1
	8113088047	LH HORIZONTAL COVER CONNECTOR	1
	8113088046	RH HORIZONTAL COVER CONNECTOR	1
	8113088045	MIDDLE COVER CONNECTOR	1
	3601012027	SEAT RAIL COVER	1
	620000071	SEAT RAIL COVER 01	1
	390001062	LH INTERIOR PANEL 03	1

ASSB_NAME	PART NO.	NAME	QTY
LH SIDE BODY	390001052	LH INTERIOR PANEL 02	2
	390001042	LH INTERIOR PANEL 01	1
	190901011	INTERIOR PANEL MOULDING	1
	190901011	INTERIOR PANEL MOULDING	1
	190901011	INTERIOR PANEL MOULDING	1
	120001011	SIDE SEAT RAIL	1
	100001151	VERTICAL PILLAR COVER	3

ASSB_NAME	PART NO.	NAME	QTY
LH SIDE BODY	100001121	LH HORIZONTAL COVER 02	1
	100001111	LH HORIZONTAL COVER 01	1

ASSB_NAME	PART NO.	NAME	QTY
LH SIDE BODY			

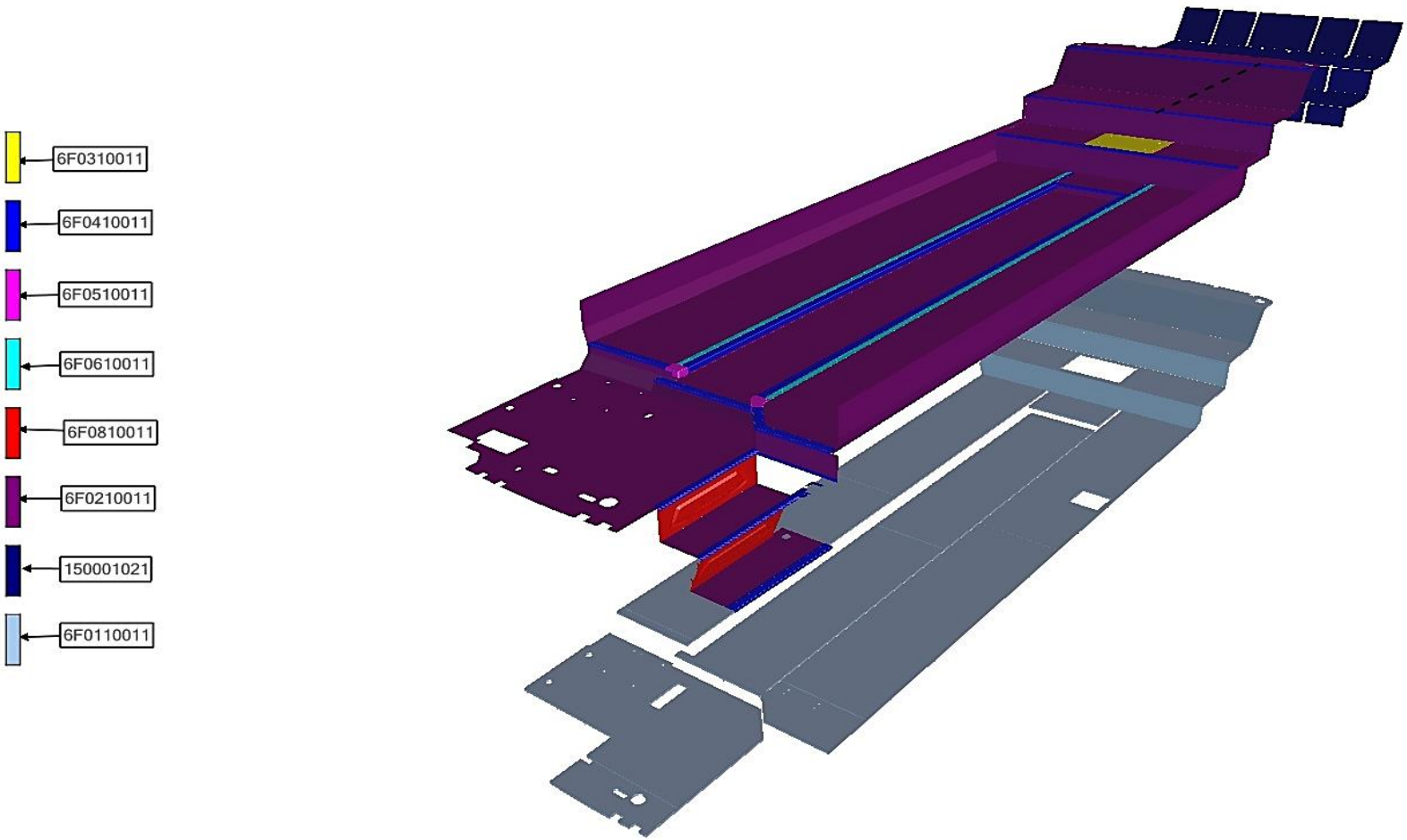

ASSB_NAME	PART NO.	NAME	QTY
FLOOR ASSY	150001021	FLOOR INSULATION	1
	6F0810011	STAIRS COVER	1
	6F0710011	FLOOR INSULATION	1
	6F0610011	SEAT RAIL ASSY	1
	6F0510011	FLOOR MOULDING COVER ASSY	1
	6F0410011	FLOOR MOULDING ASSY	1
	6F0310011	HATCHES ASSY	1

ASSB_NAME	PART NO.	NAME	QTY
FLOOR ASSY	6F0210011	FLOOR VENEER	1
	6F0110011	FLOORING BOARD ASSY	1

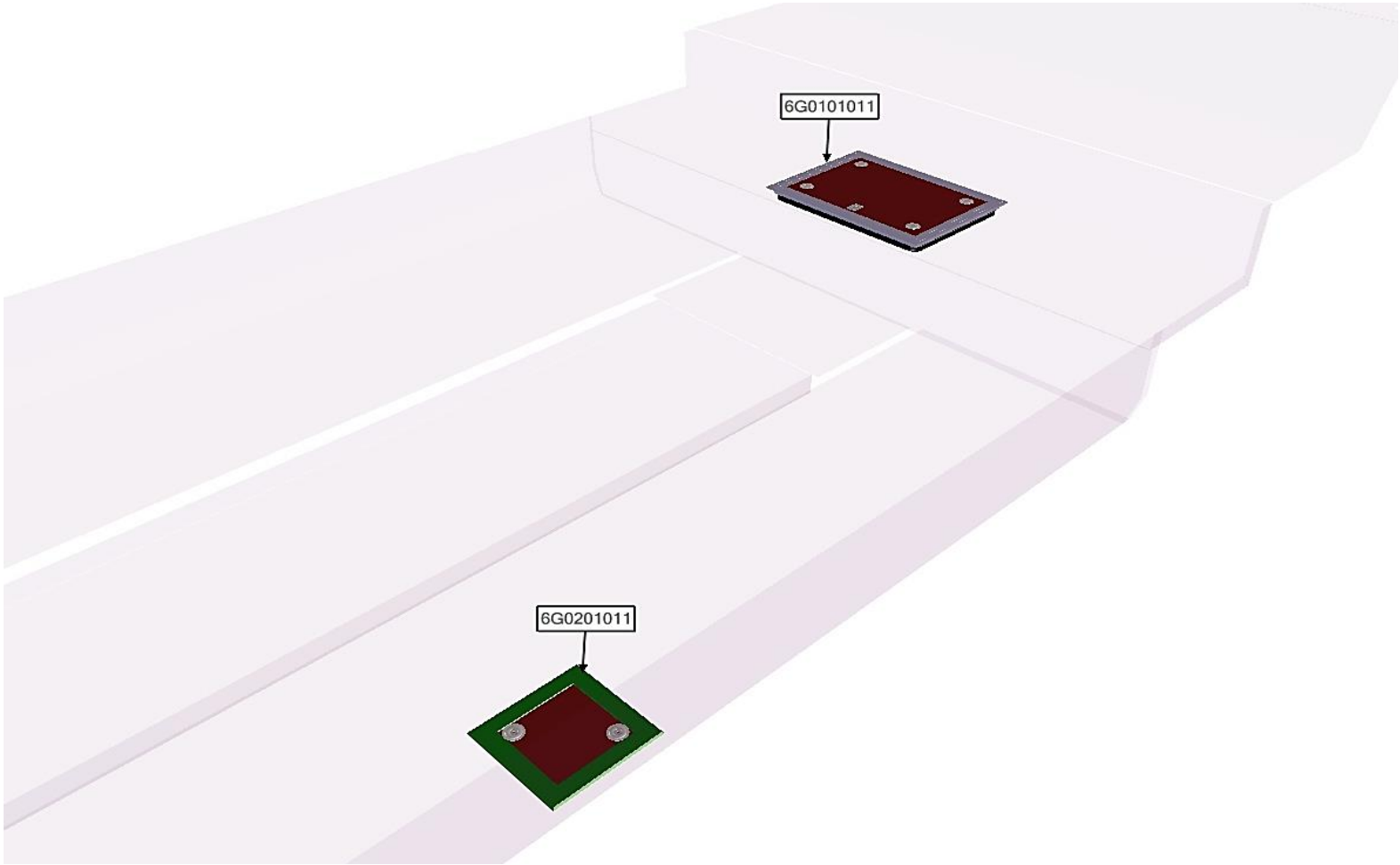

ASSB_NAME	PART NO.	NAME	QTY
HATCHES ASSY	6G0201011	TANK CHECKING HATCHE	1
	6G0101011	TRANSMISSION CHECKING HATCHE	1

ASSB_NAME	PART NO.	NAME	QTY
HATCHES ASSY			

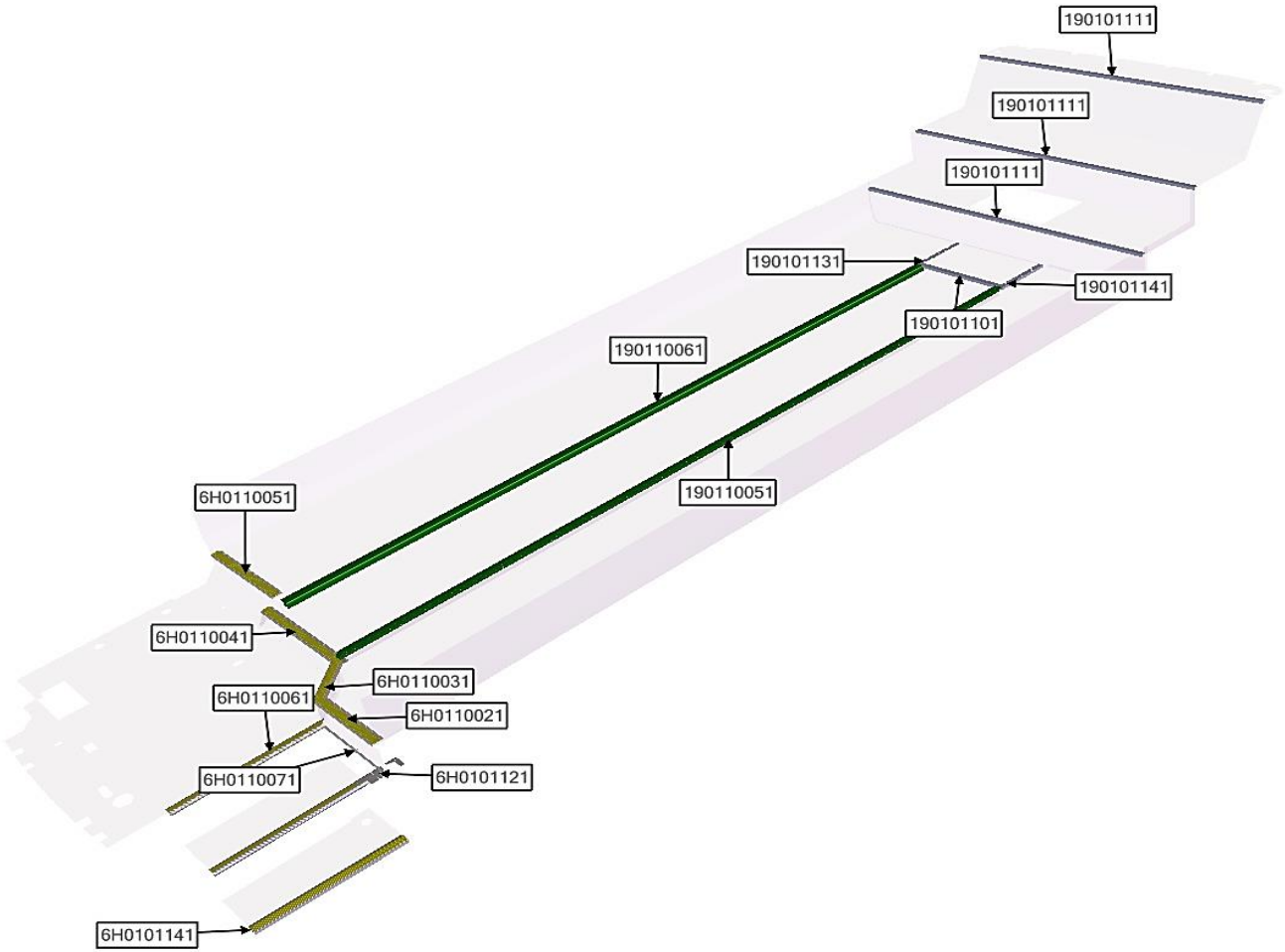

ASSB_NAME	PART NO.	NAME	QTY
FLOOR MOULDING ASSY	190110061	MAIN FLOOR MOULDING 02	1
	190110051	MAIN FLOOR MOULDING 01	1
	190101141	MAIN FLOOR MOULDING 05	1
	190101131	MAIN FLOOR MOULDING 04	1
	190101111	FLOOR MOULDING 01	3
	190101101	MOULDING 03, MAIN FLOOR	1
	6H0110071	STAIRS MOULDING 08	1

ASSB_NAME	PART NO.	NAME	QTY
FLOOR MOULDING ASSY	6H0110061	STAIRS MOULDING 05	1
	6H0110051	STAIRS MOULDING 04	1
	6H0110041	STAIRS MOULDING 03	1
	6H0110031	STAIRS MOULDING 02	1
	6H0110021	STAIRS MOULDING 01	1
	6H0101141	STAIRS MOULDING 07	1
	6H0101121	STAIRS MOULDING 06	1

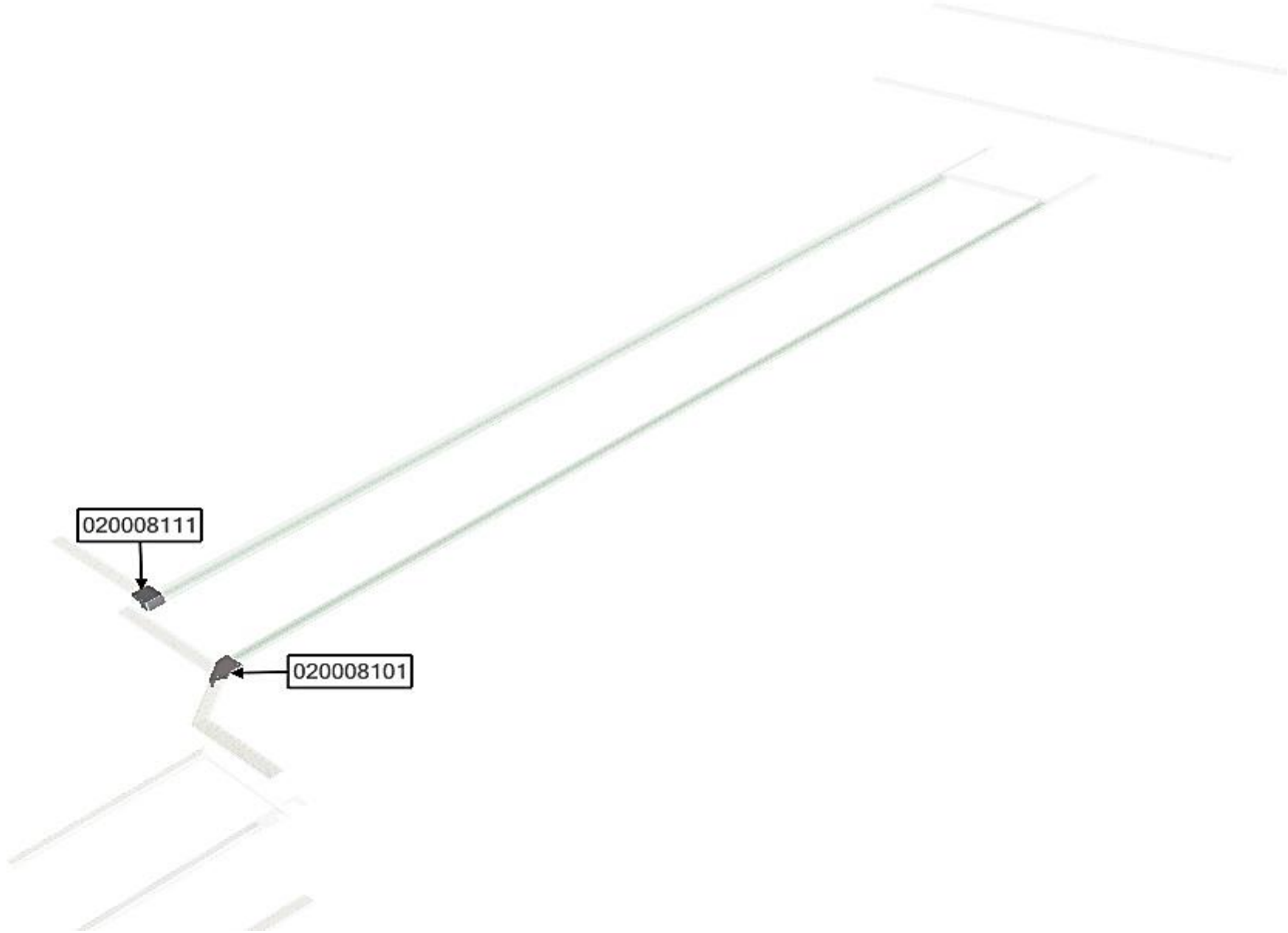

ASSB_NAME	PART NO.	NAME	QTY
FLOOR MOULDING COVER ASSY	020008111	STAIRS MOULDING COVER 02	1
	020008101	STAIRS MOULDING COVER 01	1

ASSB_NAME	PART NO.	NAME	QTY
FLOOR MOULDING COVER ASSY			

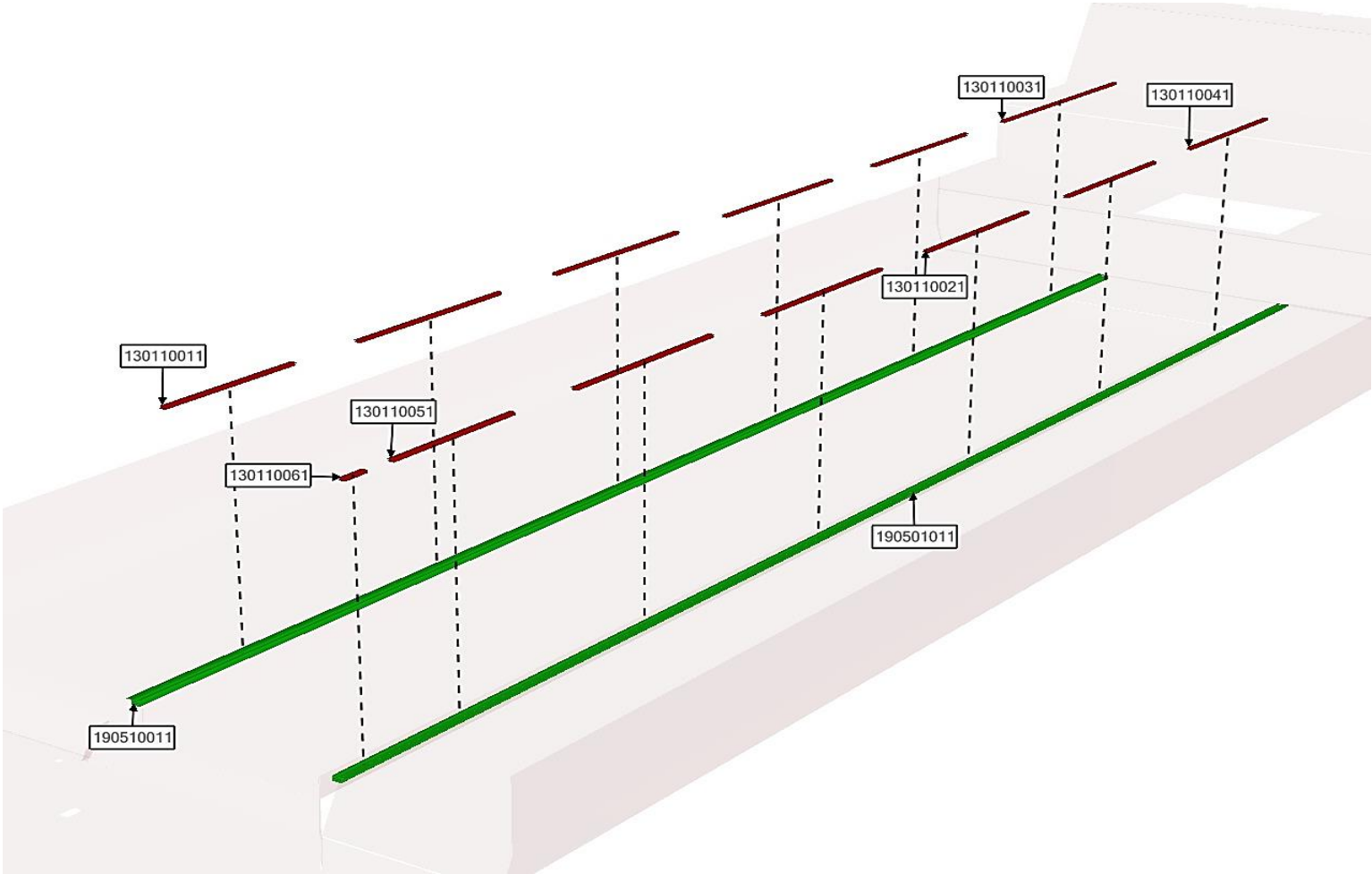

ASSB_NAME	PART NO.	NAME	QTY
SEAT RAIL ASSY	190510011	SEAT RAIL MOULDING 02	1
	190501011	SEAT RAIL MOULDING 01	1
	130110061	RAIL RUBBER GASKET 06	1
	130110051	RAIL RUBBER GASKET 05	1
	130110041	RAIL RUBBER GASKET 04	1
	130110031	RAIL RUBBER GASKET 03	1
	130110021	RAIL RUBBER GASKET 02	8

ASSB_NAME	PART NO.	NAME	QTY
SEAT RAIL ASSY	130110011	RAIL RUBBER GASKET 01	1

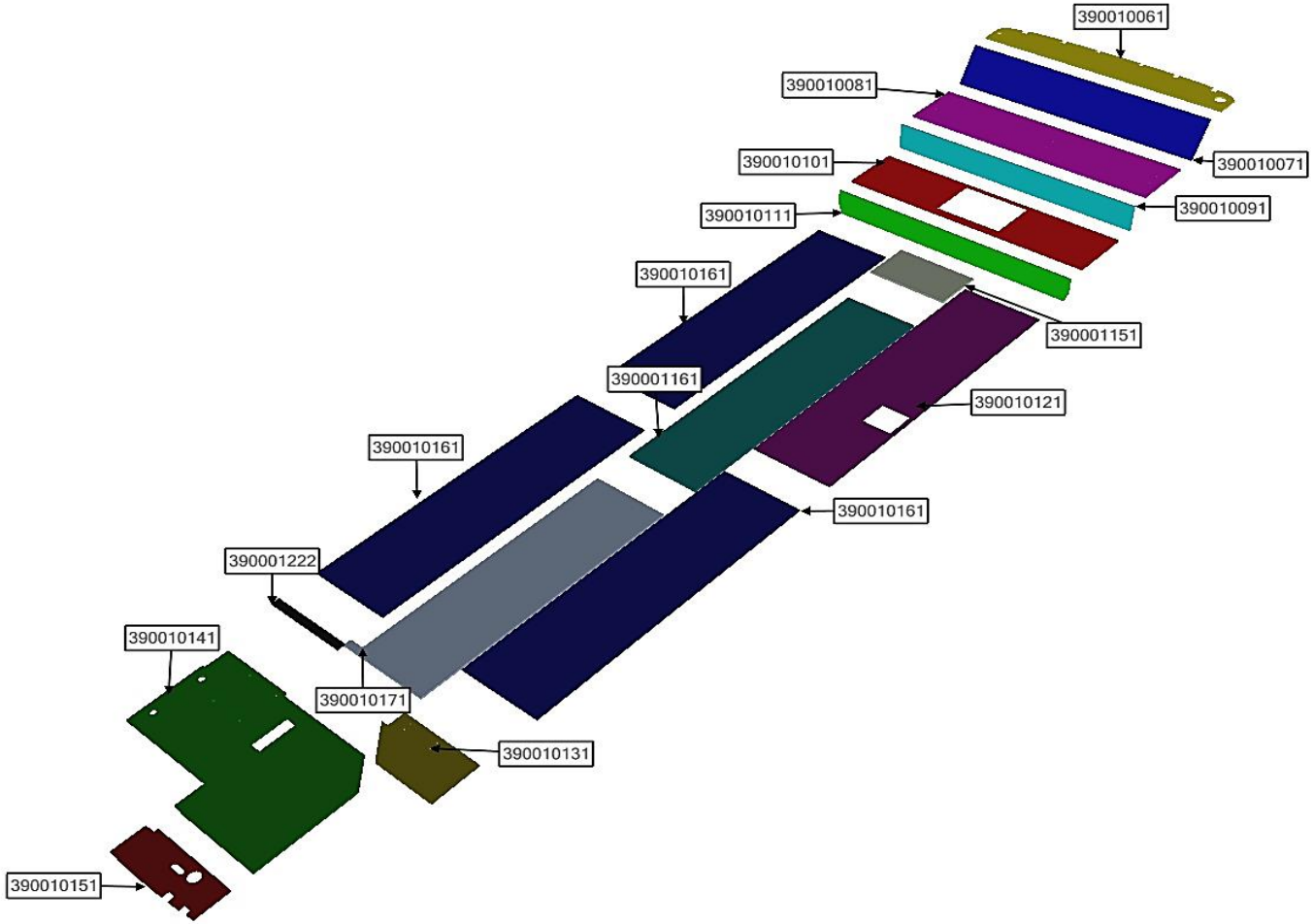

ASSB_NAME	PART NO.	NAME	QTY
FLOORING BOARD ASSY	390010171	FLOORING BOARD 07	1
	390010161	FLOORING BOARD 11	3
	390010151	FLOORING BOARD 14	1
	390010141	FLOORING BOARD 13	1
	390010131	FLOORING BOARD 12	1
	390010121	FLOORING BOARD 10	1
	390010111	FLOORING BOARD 06	1
	390001151	FLOORING BOARD 08	1

ASSB_NAME	PART NO.	NAME	QTY
FLOORING BOARD ASSY	390010101	FLOORING BOARD 05	1
	390010091	FLOORING BOARD 04	1
	390010081	FLOORING BOARD 03	1
	390010071	FLOORING BOARD 02	1
	390010061	FLOORING BOARD 01	1
	390001222	FLOORING BOARD 15	1
	390001161	FLOORING BOARD 09	1

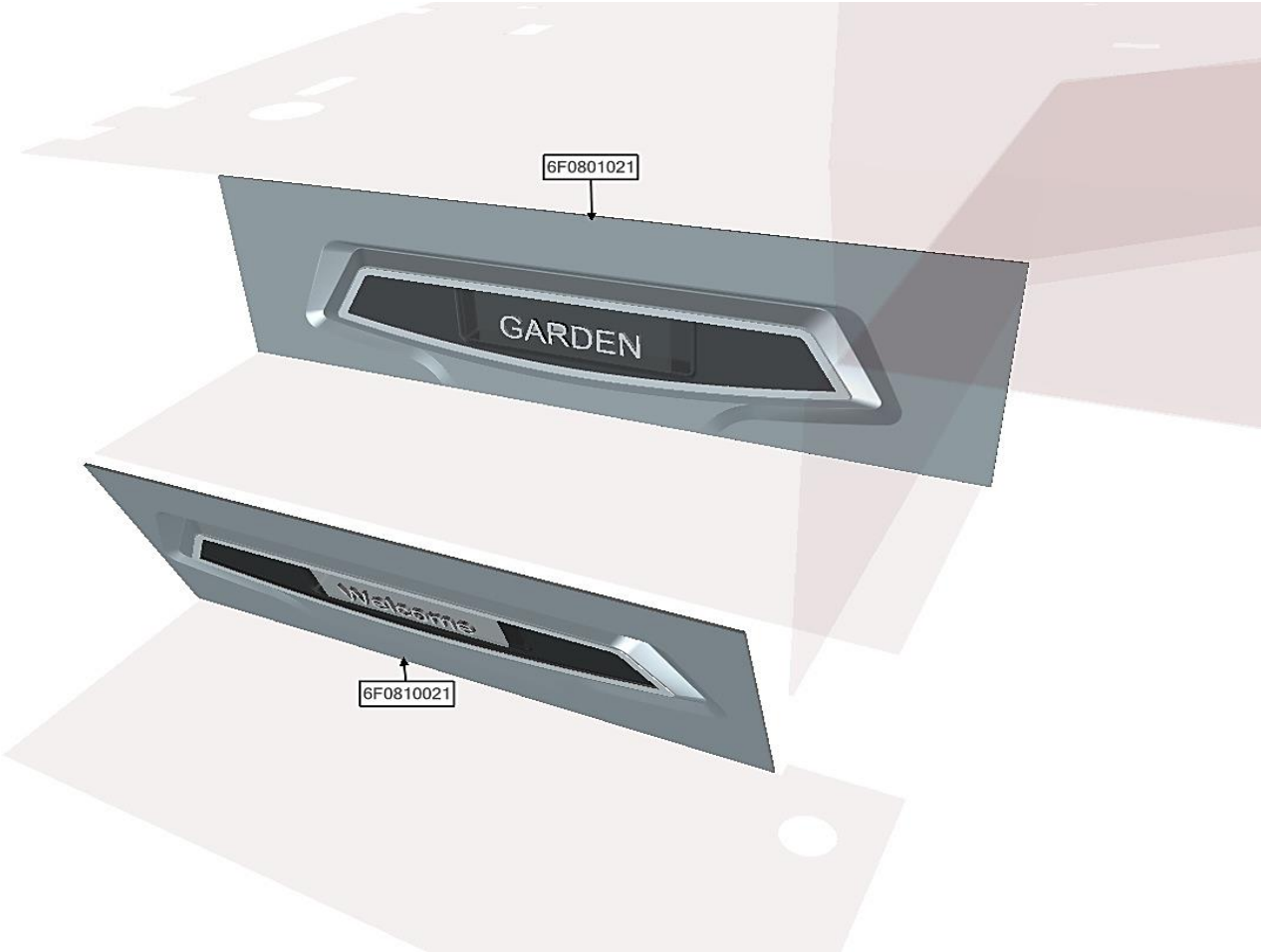

ASSB_NAME	PART NO.	NAME	QTY
STAIRS COVER	6F0810021	STAIRS COVER 02	1
	6F0801021	STAIRS COVER 01	1

ASSB_NAME	PART NO.	NAME	QTY
STAIRS COVER			

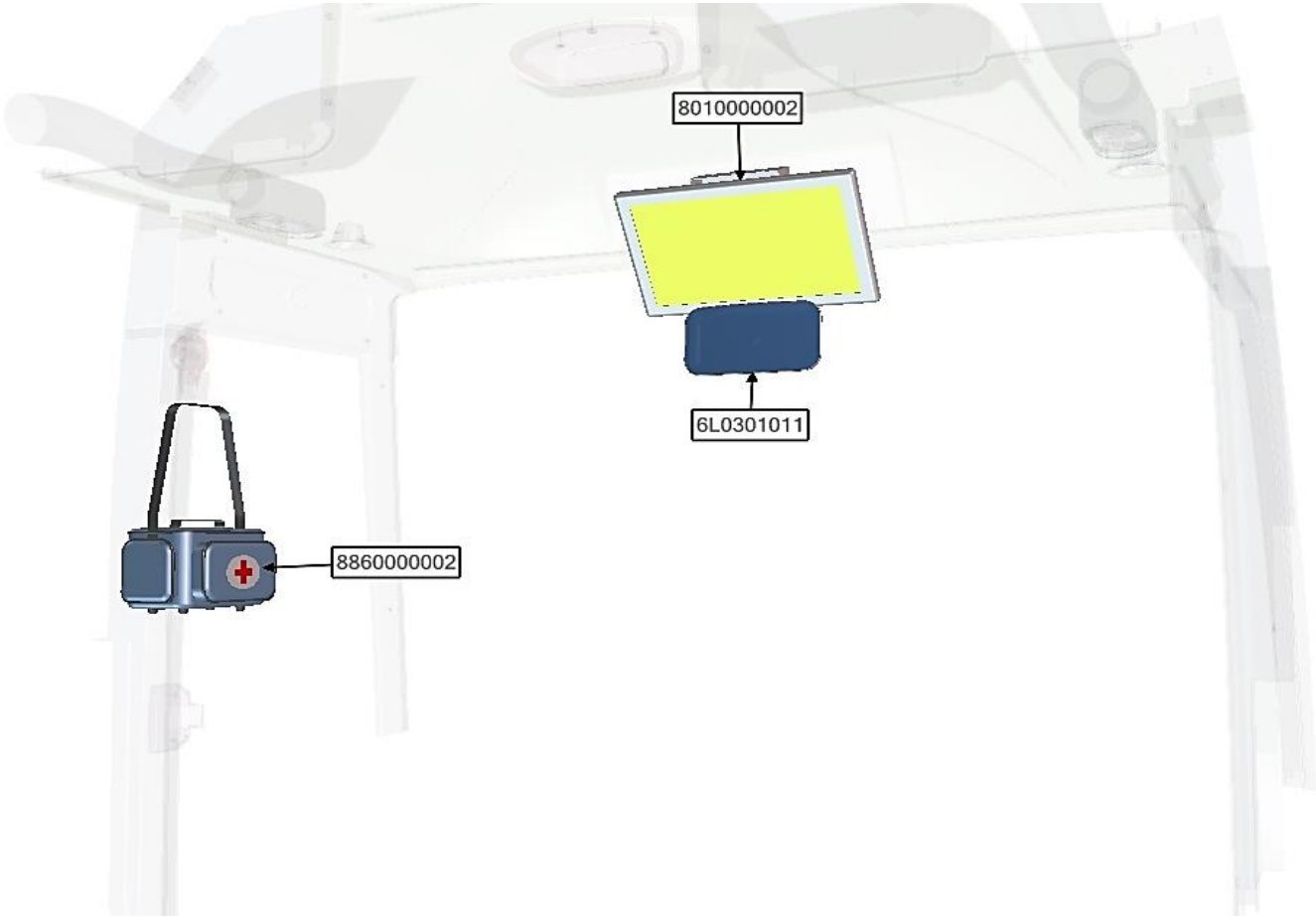

ASSB_NAME	PART NO.	NAME	QTY
FUNCTIONAL SYSTEM	8860000002	AMBULANCE BAG	1
	8010000002	LCD 21 INCH MONITOR	1
	6L0301011	INSIDE MIRROR	1

ASSB_NAME	PART NO.	NAME	QTY
FUNCTIONAL SYSTEM			

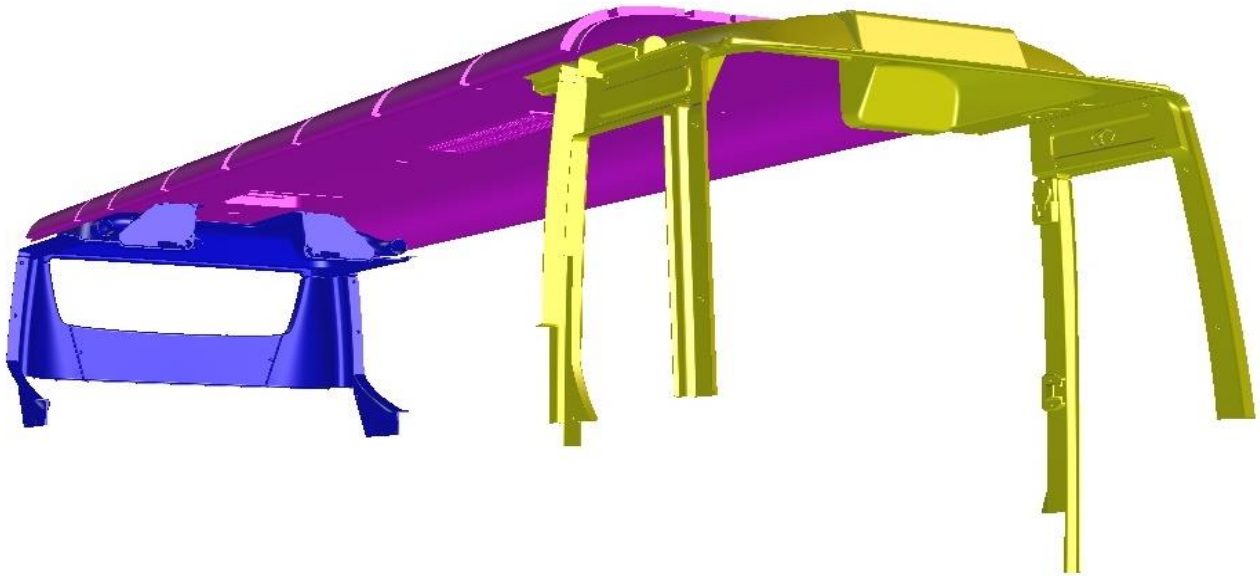

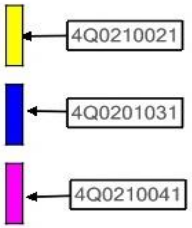

ASSB_NAME	PART NO.	NAME	QTY
CEILING	4Q0210041	MIDDLE CEILING	1
	4Q0210021	FRONT HEADLINING ASSY	1
	4Q0201031	REAR HEADLINING ASSY	1

ASSB_NAME	PART NO.	NAME	QTY
CEILING			

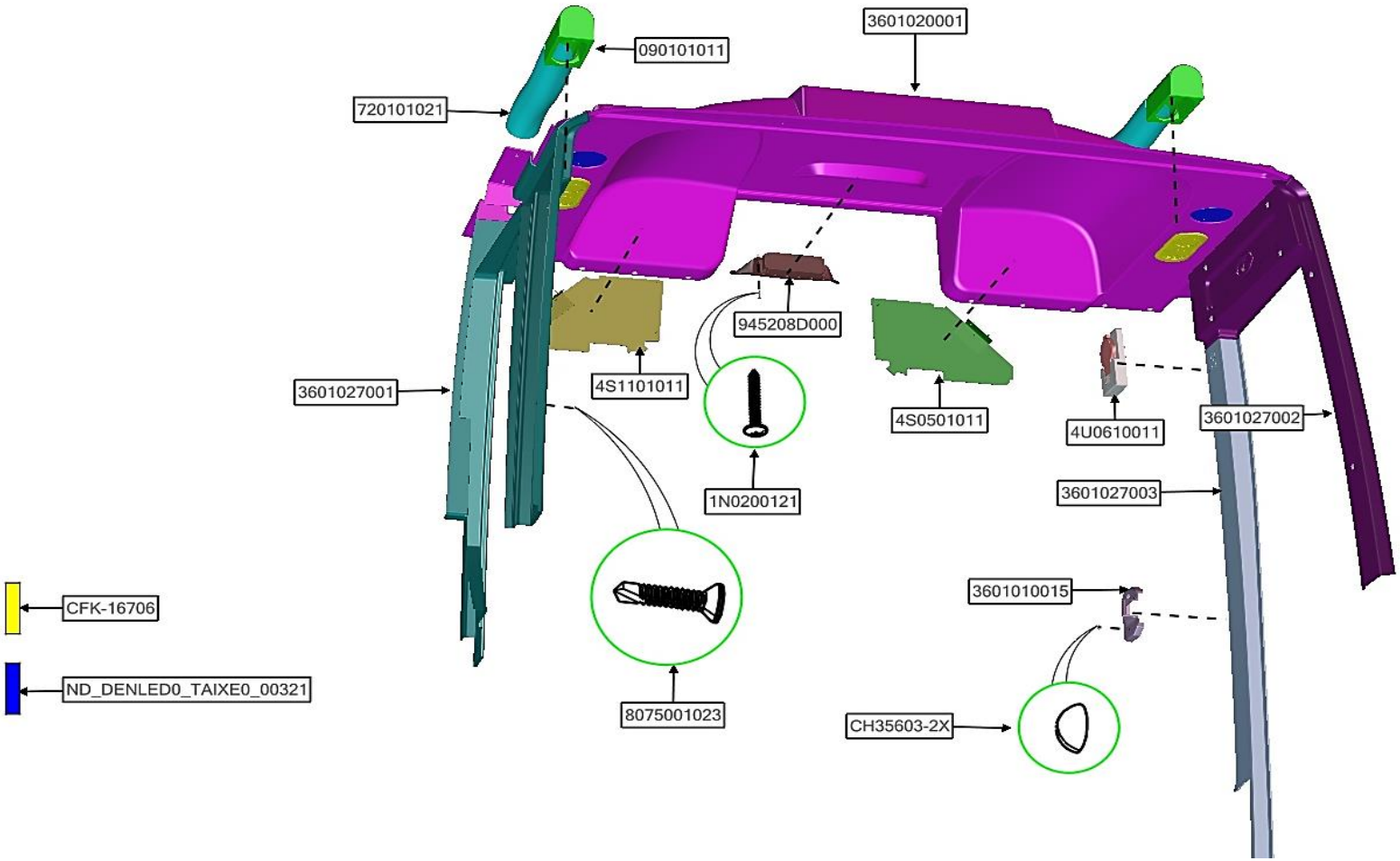

ASSB_NAME	PART NO.	NAME	QTY
FRONT HEADLINING ASSY	ND_DENLED0_TAIXE0_00321	HEADLINING LIGHTS	2
	CH35603-2X	SCREW CAP	1
	CFK-16706	DOUBLE WIND DOOR	2
	8075001023	SCREW 0420	1
	3601027003	DOOR PILLAR COVER	1
	3601027002	LH WINDSCREEN PILLAR COVER	1
	3601027001	RH HEADLINING PILLAR COVER	1

ASSB_NAME	PART NO.	NAME	QTY
FRONT HEADLINING ASSY	3601020001	FRONT HEADLINING	1
	3601010015	CAP	1
	720101021	FLEXIBLE PIPE 01	2
	090101011	CONNECTING COVER	2
	945208D000	CLOCK	1
	4U0610011	EMERGENCY VALVES ASSY	1
	4S1101011	RH LUGGAGE SHELVES COVER	1

ASSB_NAME	PART NO.	NAME	QTY
FRONT HEADLINING ASSY	4S0501011	LH LUGGAGE SHELVES COVER	1
	1N0200121	SCREW 0420	1
	311111-02135EB	XƯƠNG ĐẦU CT17	2
	311110-02135EB	XƯƠNG ĐẦU CT18	2
	311120-02135EB	XƯƠNG ĐẦU CT19	2
	311121-02135EB	XƯƠNG ĐẦU CT20	2

ASSB_NAME	PART NO.	NAME	QTY
FRONT HEADLINING ASSY	311122-02135EB	XƯƠNG ĐẦU CT21	1
	311125-02135EB	XƯƠNG ĐẦU CT22	2
	311124-02135EB	XƯƠNG ĐẦU CT23	2
	311113-02135EB	XƯƠNG ĐẦU CT24	1
	311112-02135EB	XƯƠNG ĐẦU CT25	1
	311115-02135EB	XƯƠNG ĐẦU CT26	1
	311114-02135EB	XƯƠNG ĐẦU CT27	1

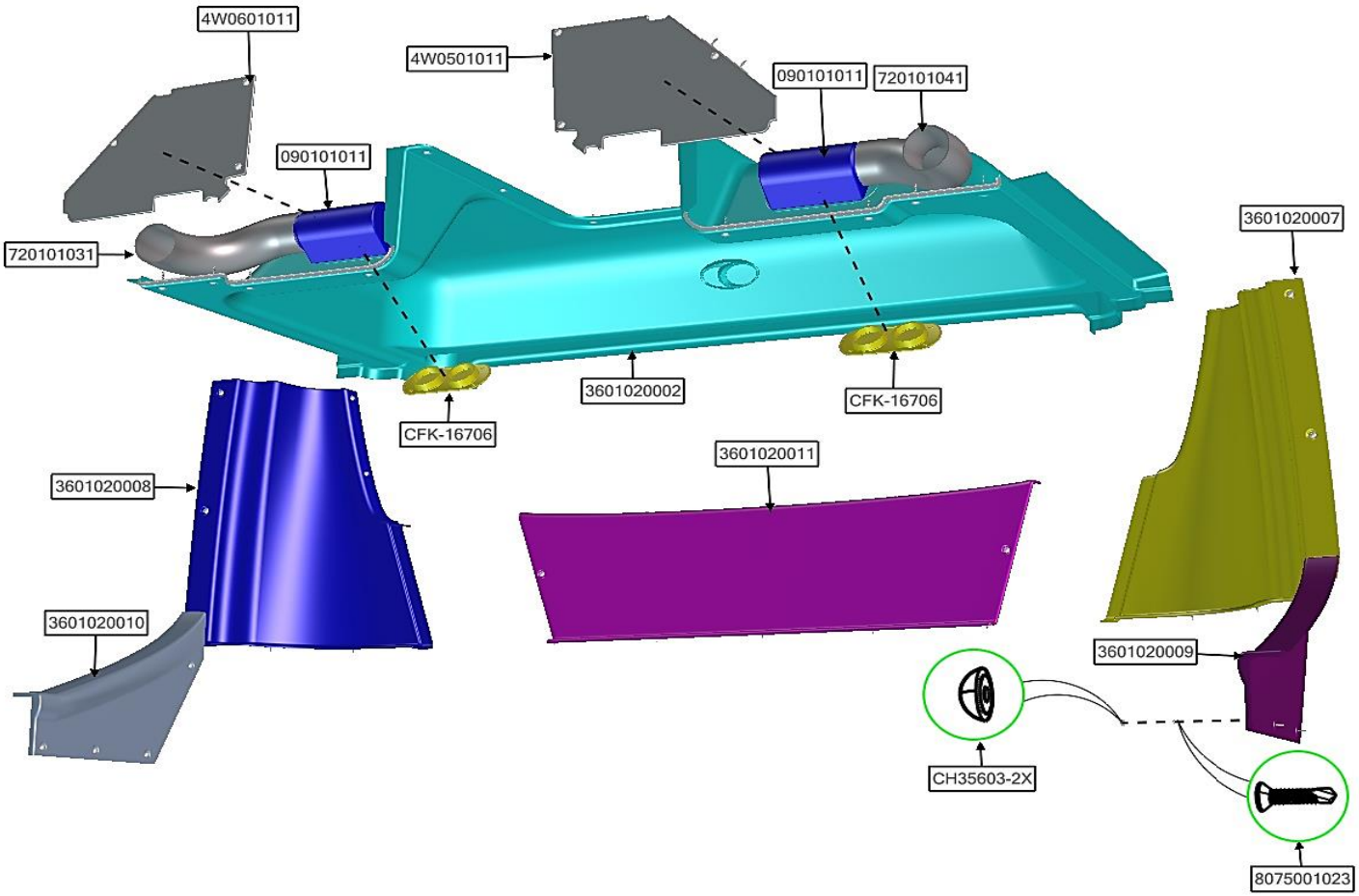

ASSB_NAME	PART NO.	NAME	QTY
REAR HEADLINING ASSY	CH35603-2X	SCREW CAP	1
	CFK-16706	DOUBLE WIND DOOR	2
	8075001023	SCREW 0420	1
	3601020011	MIDDLE HEADLINING PILLAR COVER	1
	3601020010	RH REAR HEADLINING PILLAR COVER	1
	3601020009	LH REAR HEADLINING PILLAR COVER	1
	3601020008	RH HEADLINING PILLAR COVER	1

ASSB_NAME	PART NO.	NAME	QTY
REAR HEADLINING ASSY	3601020007	LH HEADLINING PILLAR COVER	1
	3601020002	REAR HEADLINING	1
	720101041	FLEXIBLE PIPE 03	1
	720101031	FLEXIBLE PIPE 02	1
	090101011	CONNECTING COVER	2
	4W0601011	RH LUGGAGE SHELVES COVER	1
	4W0501011	LH LUGGAGE SHELVES COVER	1

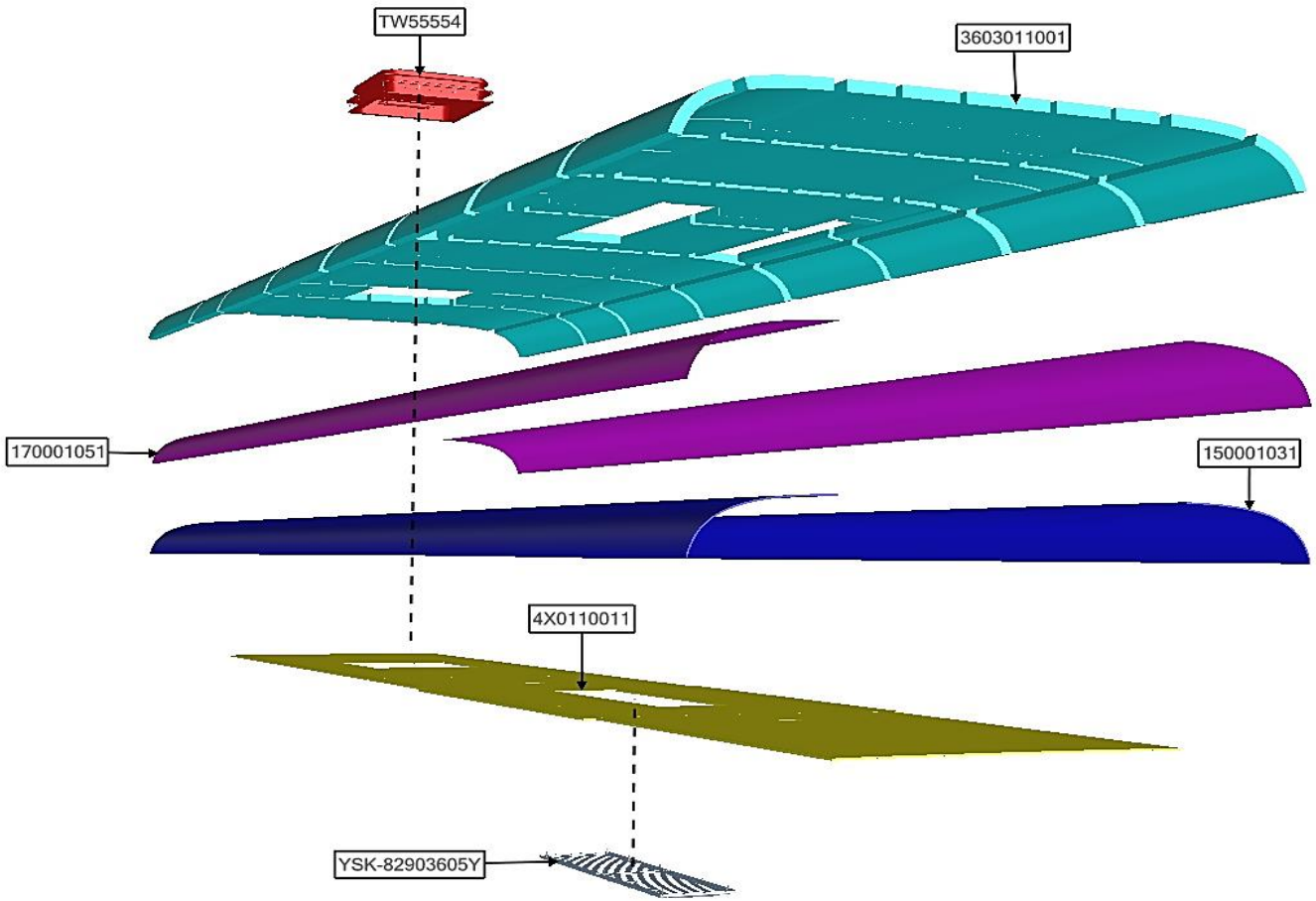

ASSB_NAME	PART NO.	NAME	QTY
MIDDLE CEILING	YSK-82903605Y	AIR-CONDITIONIN GRID	2
	TW55554	CEILING FAN	1
	3603011001	CEILING INSULATION	1
	170001051	ALUMINUM INSULATION	1
	150001031	INSULATION	1
	4X0110011	CEILING BOARD ASSY	1

ASSB_NAME	PART NO.	NAME	QTY
MIDDLE CEILING			

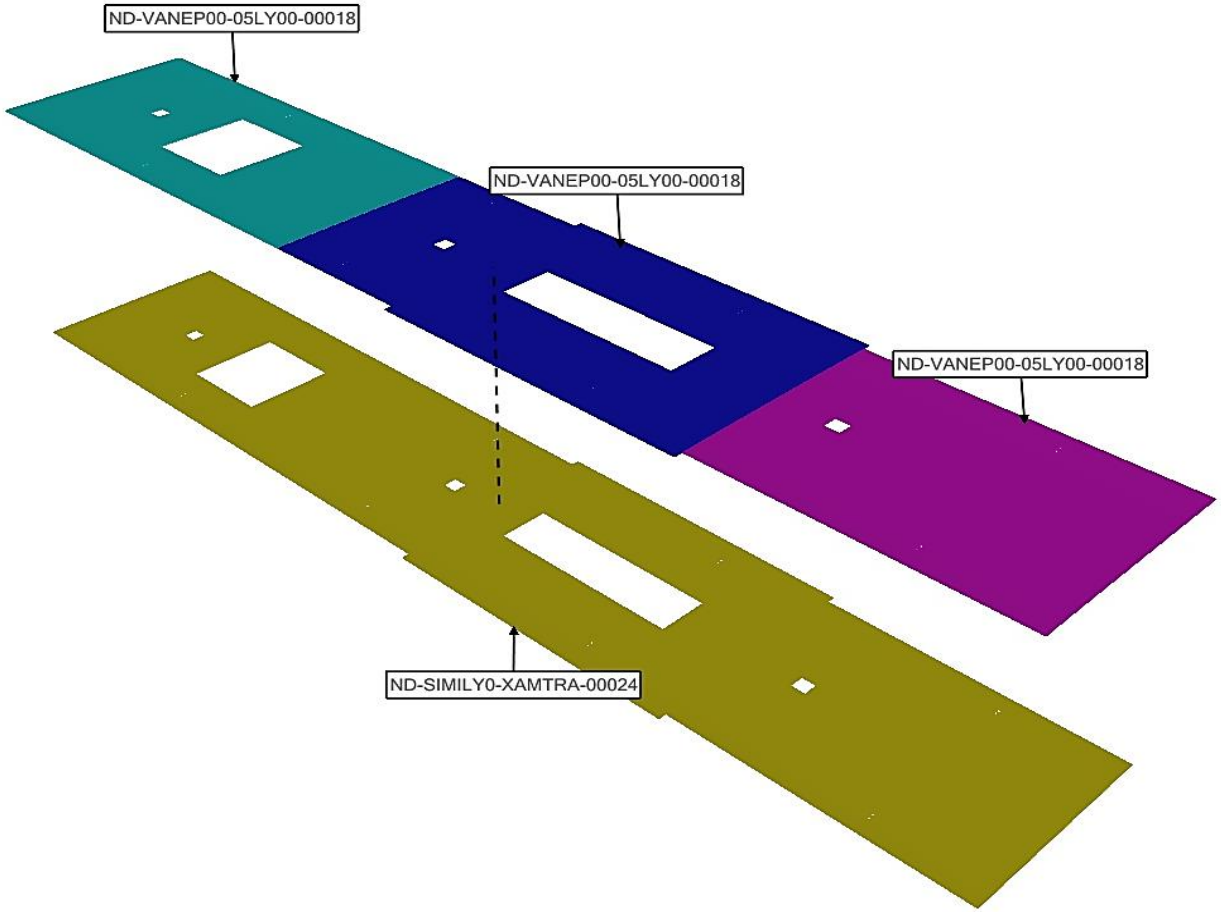

ASSB_NAME	PART NO.	NAME	QTY
CEILING BOARD ASSY	ND-SIMILY0-XAMTRA-00024	CEILING VENEER	1
	ND-VANEP00-05LY00-00018	CEILING BOARD 03	1
	ND-VANEP00-05LY00-00018	CEILING BOARD 02	1

ASSB_NAME	PART NO.	NAME	QTY
CEILING BOARD ASSY			

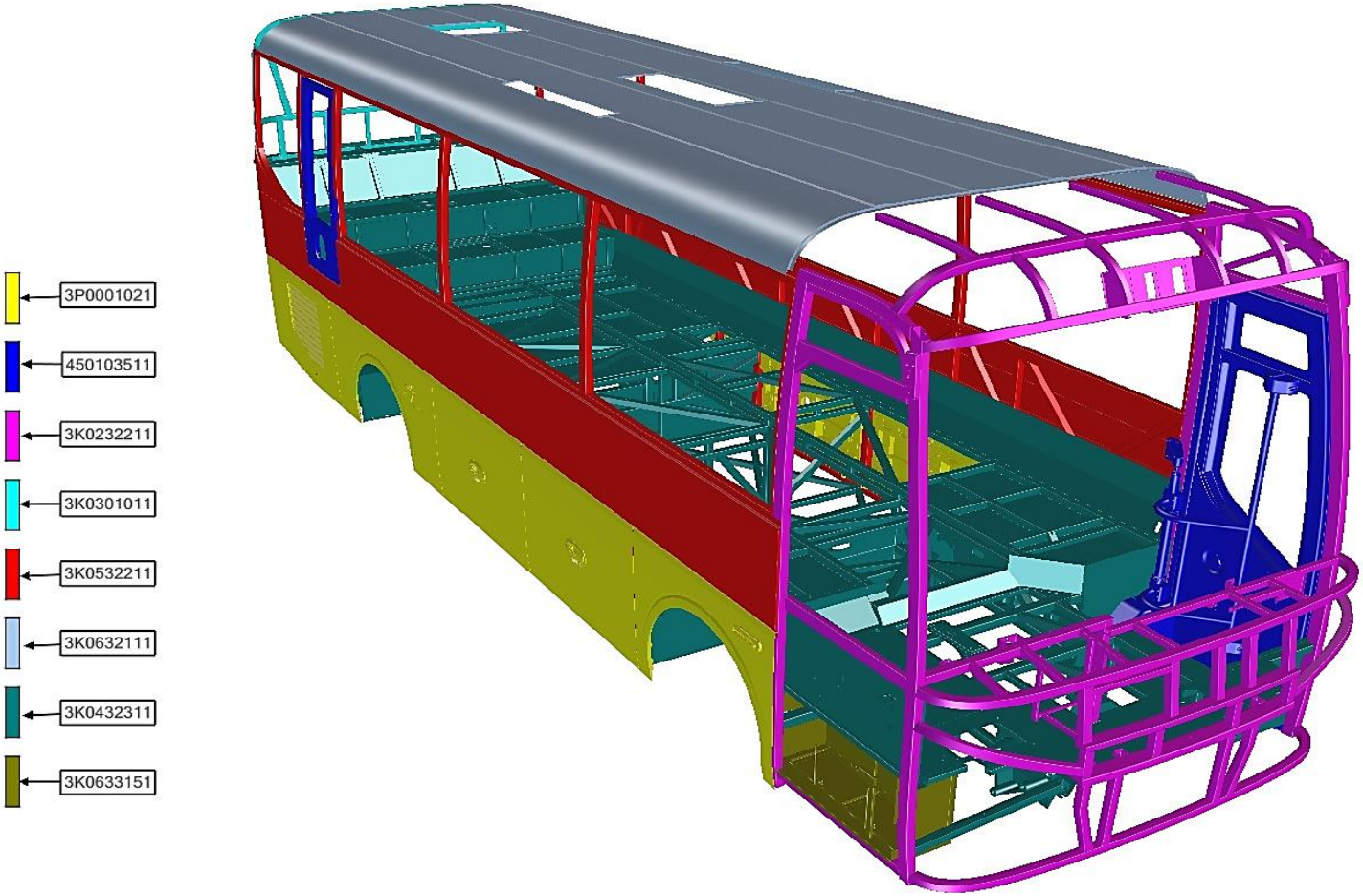

ASSB_NAME	PART NO.	NAME	QTY
BODY	3K0632111	ROOF FRAME ASSY	1
	3P0001021	FLAP ASSY	1
	3K0532211	SIDE FRAME ASSY	1
	3K0633151	COMPLETED STEEL SHEET	1
	3K0301011	REAR FRAME ASSY	1
	3K0232211	FRONT FRAME ASSY	1
	450103511	DOOR ASSY	1

ASSB_NAME	PART NO.	NAME	QTY
BODY			

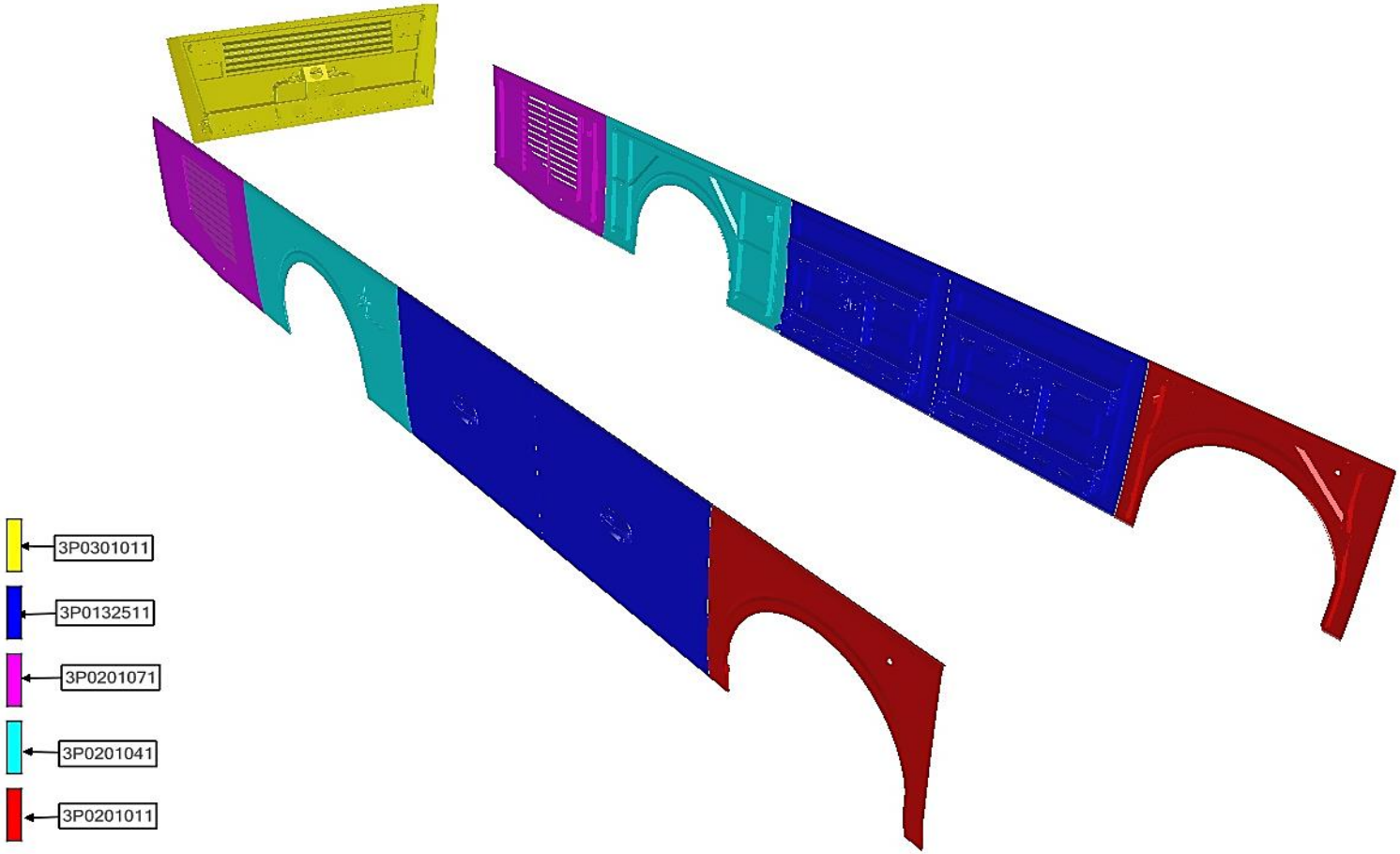

ASSB_NAME	PART NO.	NAME	QTY
FLAP ASSY	3P0301011	REAR FLAP ASSY	1
	3P0132511	LUGGAGE FLAP ASSY	1
	3P0201041	REAR FENDER FLAP ASSY	1
	3P0201071	GRID FLAP	1
	3P0201011	FRONT FENDER FLAP ASSY	1

ASSB_NAME	PART NO.	NAME	QTY
FLAP ASSY			

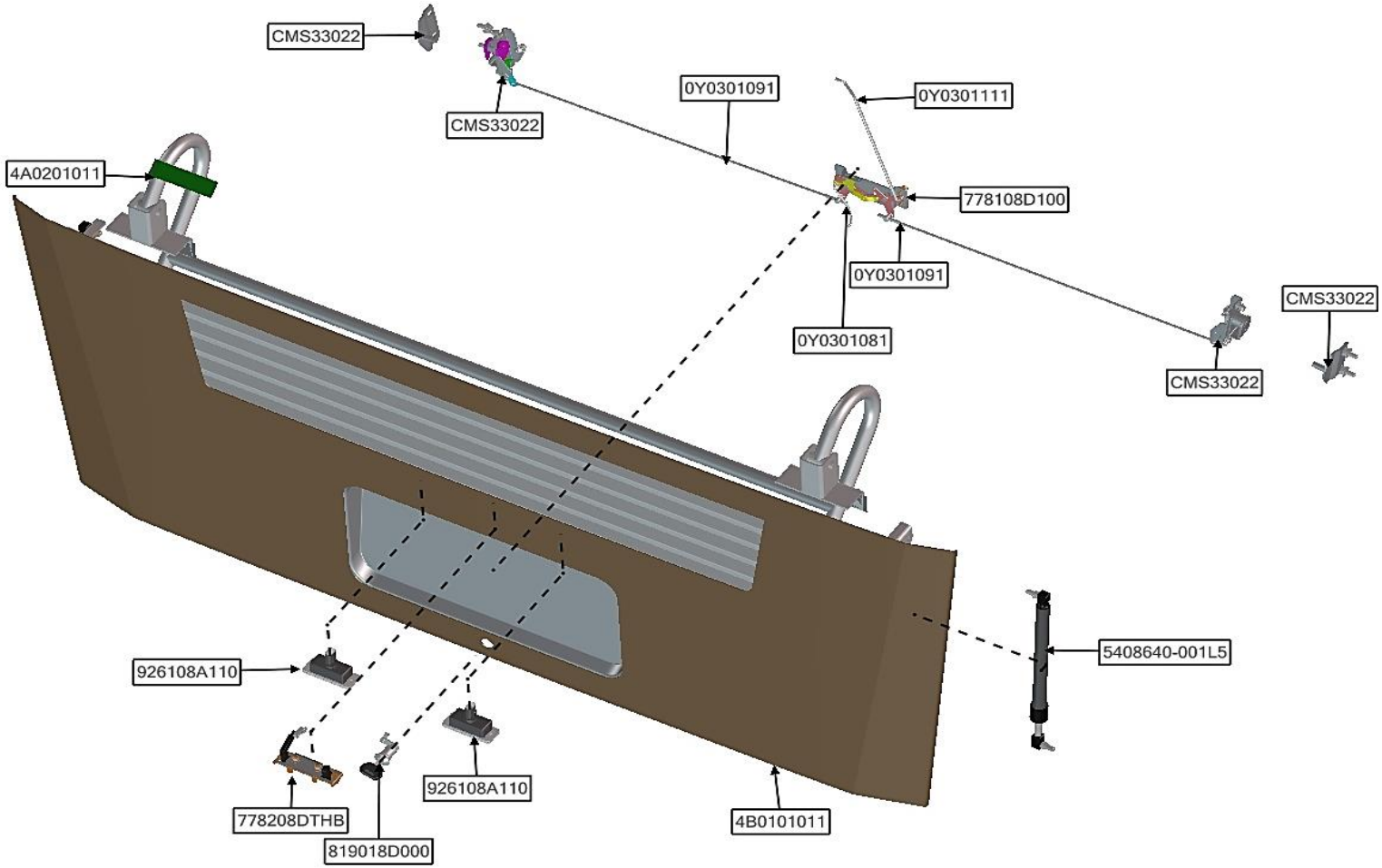

ASSB_NAME	PART NO.	NAME	QTY
REAR FLAP ASSY	926108A110	NUMBER PLATE LAMP	2
	0Y0301091	LINK ROB 02	2
	CMS33022	LOCK	2
	CMS33022	STRIKER ASSY	2
	5408640-001L5	LIFTER ASSY	2
	4B0101011	REAR FLAP CAP	1
	778108D100	REAR FLAP LINK ASSY	1

ASSB_NAME	PART NO.	NAME	QTY
REAR FLAP ASSY	4A0201011	REAR FLAP LEVER ARM ASSY	1
	778208DTHB	ENGINE FLAP HANDLE	1
	0Y0301111	LINK ROB 04	1
	0Y0301081	LINK ROB 01	1
	819018D000	LOCK ASSY	1
	130001091	WEATHERSTRIP	1
	3S0132511	LUGGAGE FLAP	1

ASSB_NAME	PART NO.	NAME	QTY
REAR FLAP ASSY	3S0332011	LIFTER ASSY	1
	3S0432511	FLAP TURNBUCKLE ASSY	1
	3S0532021	STOPPER ASSY	1
	3S0232511	LUGGAGE FLAP LEVER ARM ASSY	1

ASSB_NAME	PART NO.	NAME	QTY
REAR FLAP ASSY			

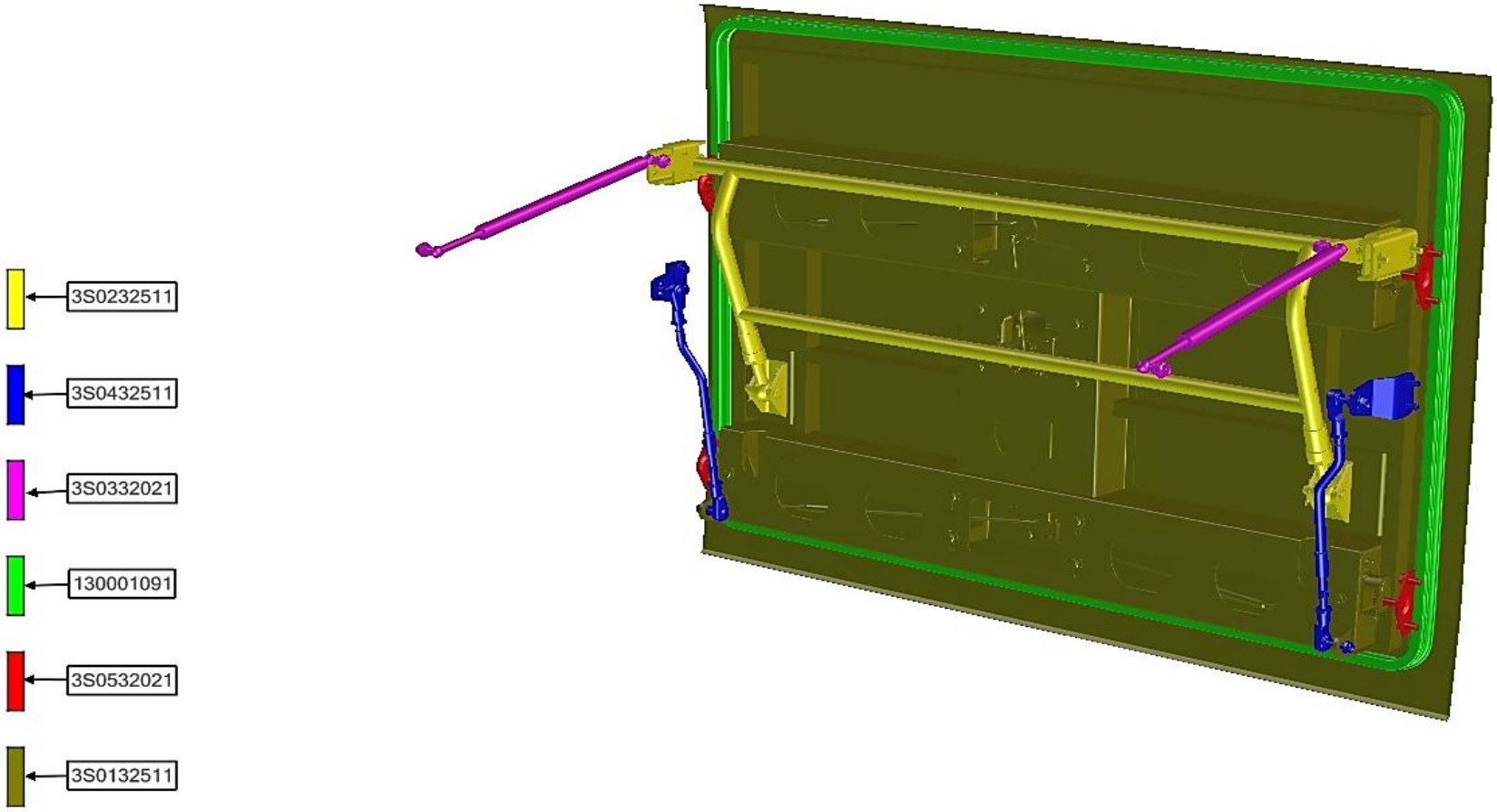

ASSB_NAME	PART NO.	NAME	QTY
LUGGAGE FLAP ASSY	130001091	WEATHERSTRIP	1
	3S0132511	LUGGAGE FLAP	1
	3S0332011	LIFTER ASSY	1
	3S0432511	FLAP TURNBUCKLE ASSY	1
	3S0532021	STOPPER ASSY	1
	3S0232511	LUGGAGE FLAP LEVER ARM ASSY	1

ASSB_NAME	PART NO.	NAME	QTY
LUGGAGE FLAP ASSY			

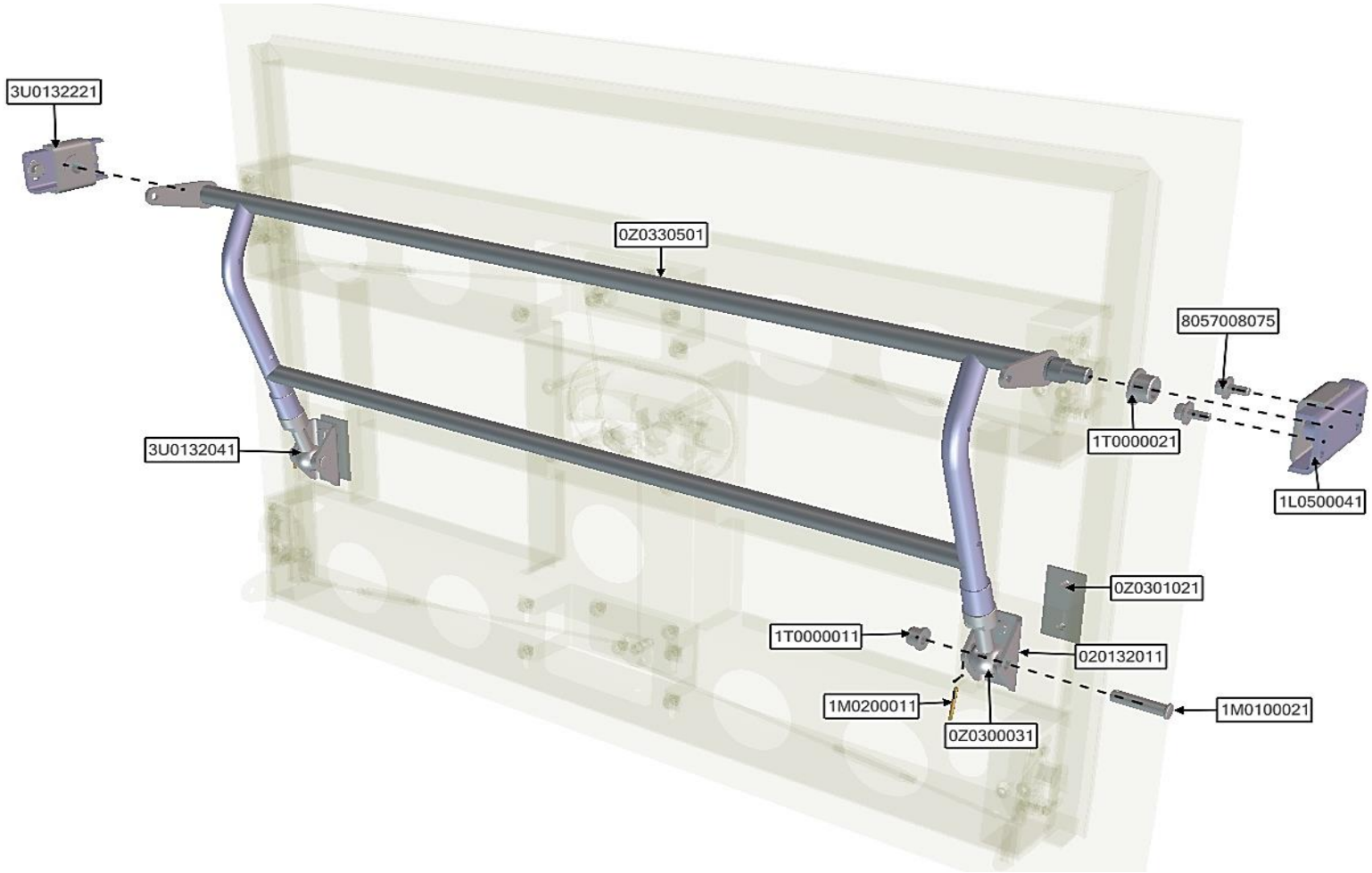

ASSB_NAME	PART NO.	NAME	QTY
LUGGAGE FLAP LEVER ARM ASSY	3U0132221	LUGGAGE COMPARTMENTS HINGE	2
	3U0132041	LUGGAGE FLAP TURNBUCKLE	2
	8057008075	BOLT 08020125	1
	1T0000021	PLASTIC SPACER 02	1
	0Z0330501	LUGGAGE FLAP LEVER ARM	1
	1M0100021	PIN	1
	0Z0300031	TURNBUCKLE PIN	1

ASSB_NAME	PART NO.	NAME	QTY
LUGGAGE FLAP LEVER ARM ASSY	1M0200011	SPLIT PIN	1
	1T0000011	PLASTIC SPACER 01	1
	0Z0301021	BRACKET MOUNT	1
	020132011	FLAP FRAME BRACKET	1
	1L0500041	LUGGAGE COMPARTMENTS HINGE	1

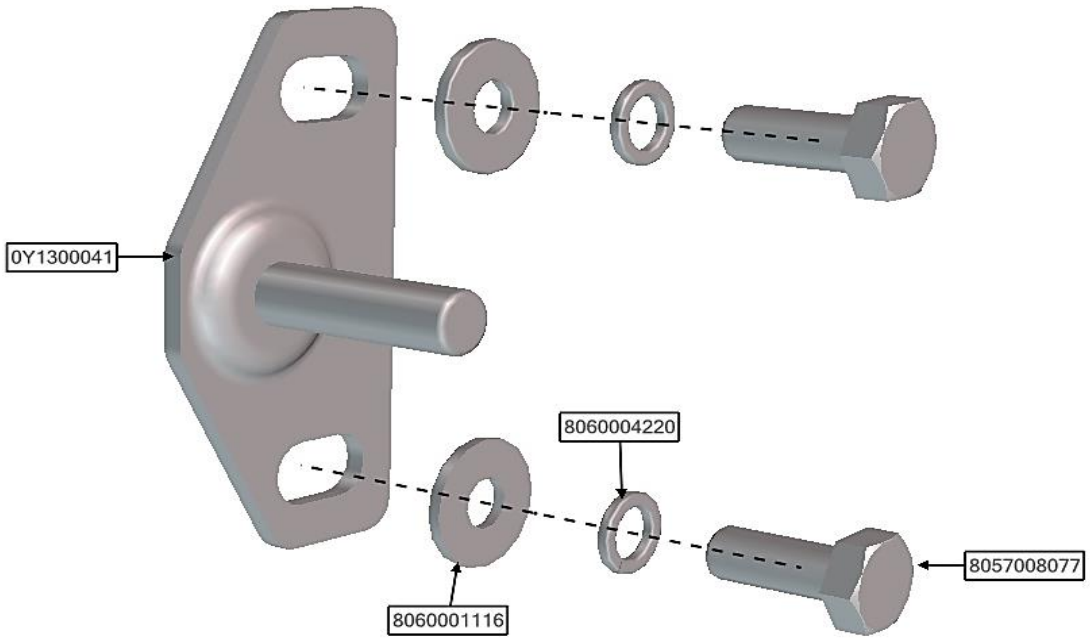

ASSB_NAME	PART NO.	NAME	QTY
STOPPER ASSY	8060001116	WASHER Ø08	2
	8060004220	SPLIT WASHER Ø18	2
	8057008077	BOLT 08020125	2
	0Y1300041	STOPPER ASSY	1

ASSB_NAME	PART NO.	NAME	QTY
STOPPER ASSY			

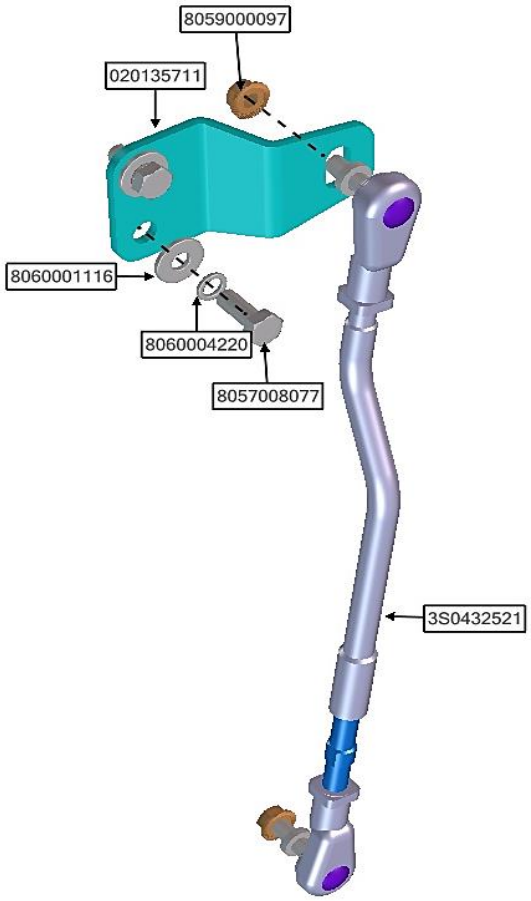

ASSB_NAME	PART NO.	NAME	QTY
FLAP TURNBUCKLE ASSY	8060004220	SPLIT WASHER Ø08	1
	8057008077	BOLT 08020125	1
	8059000097	NUT 08125	1
	3S0432521	LUGGAGE FLAP TURNBUCKLE	1
	020135711	LUGGAGE FLAP TURNBUCKLE BRAKET	1
	8060001116	WASHER Ø08	1

ASSB_NAME	PART NO.	NAME	QTY
FLAP TURNBUCKLE ASSY			

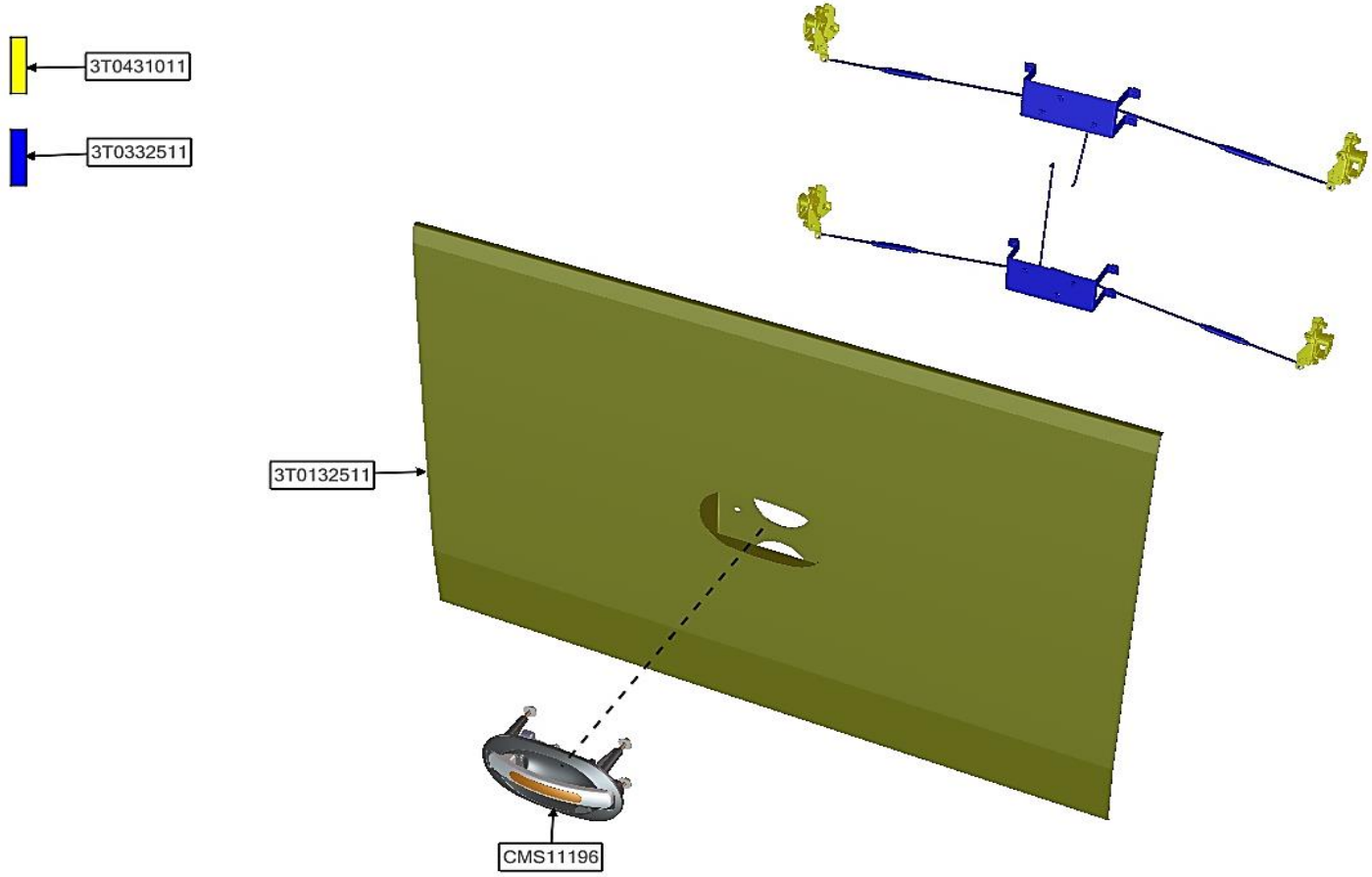

ASSB_NAME	PART NO.	NAME	QTY
LUGGAGE FLAP, ASSY	3T0332511	LINK ASSY	1
	3T0132511	LUGGAGE FLAP CAP	1
	3T0431011	LOCK ASSY	1
	CMS11196	LUGGAGE FLAP HANDLE	1

ASSB_NAME	PART NO.	NAME	QTY

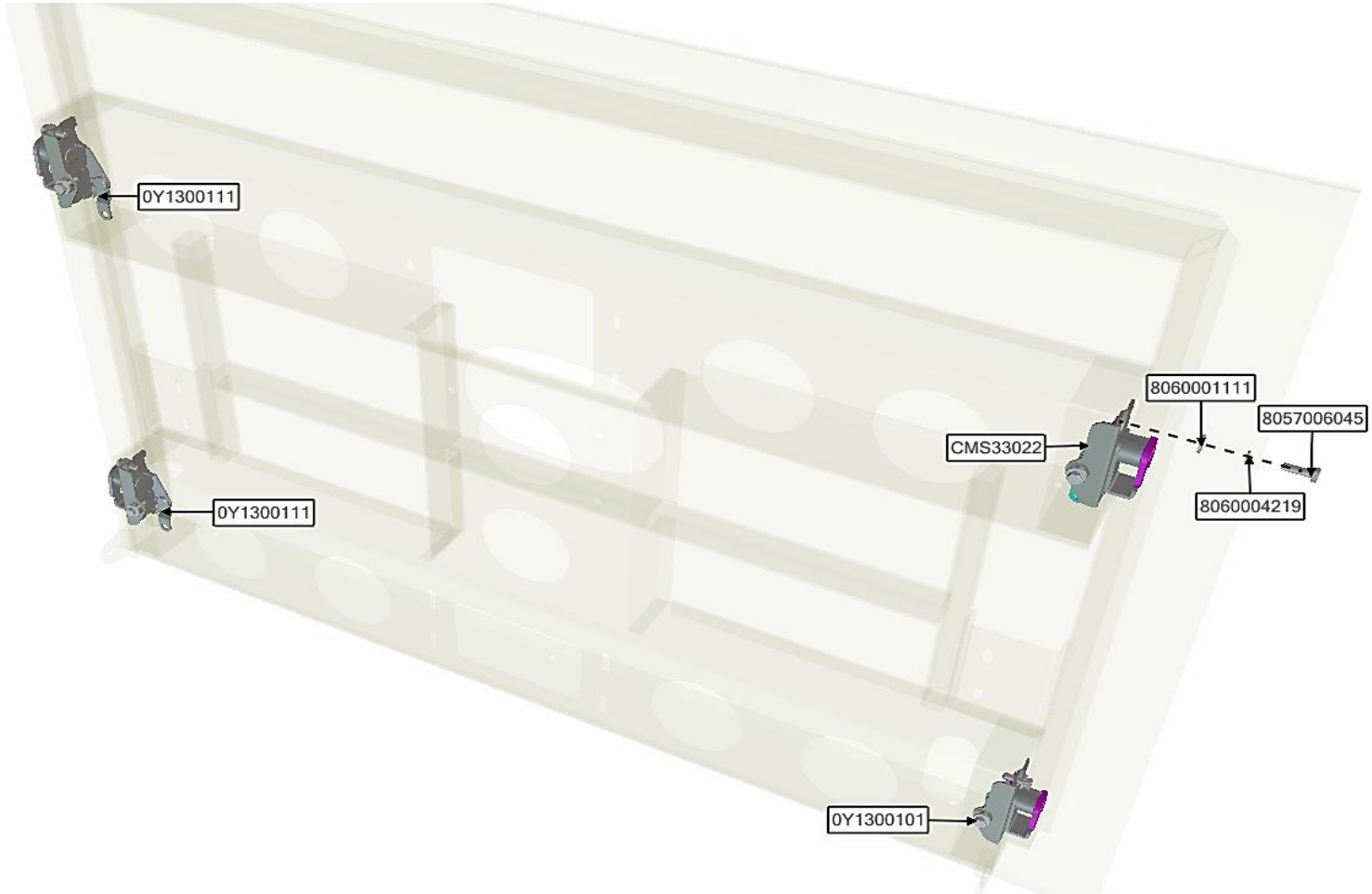

ASSB_NAME	PART NO.	NAME	QTY
STRIKER, ASSY	0Y1300101	LH LOCK ASSY	2
	0Y1300111	RH LOCK ASSY	2
	CMS33022	LOCK	1
	8060001111	WASHER Ø06	1
	8060004219	SPLIT WASHER Ø18	1
	8057006045	BOLT 06020100	1

ASSB_NAME	PART NO.	NAME	QTY

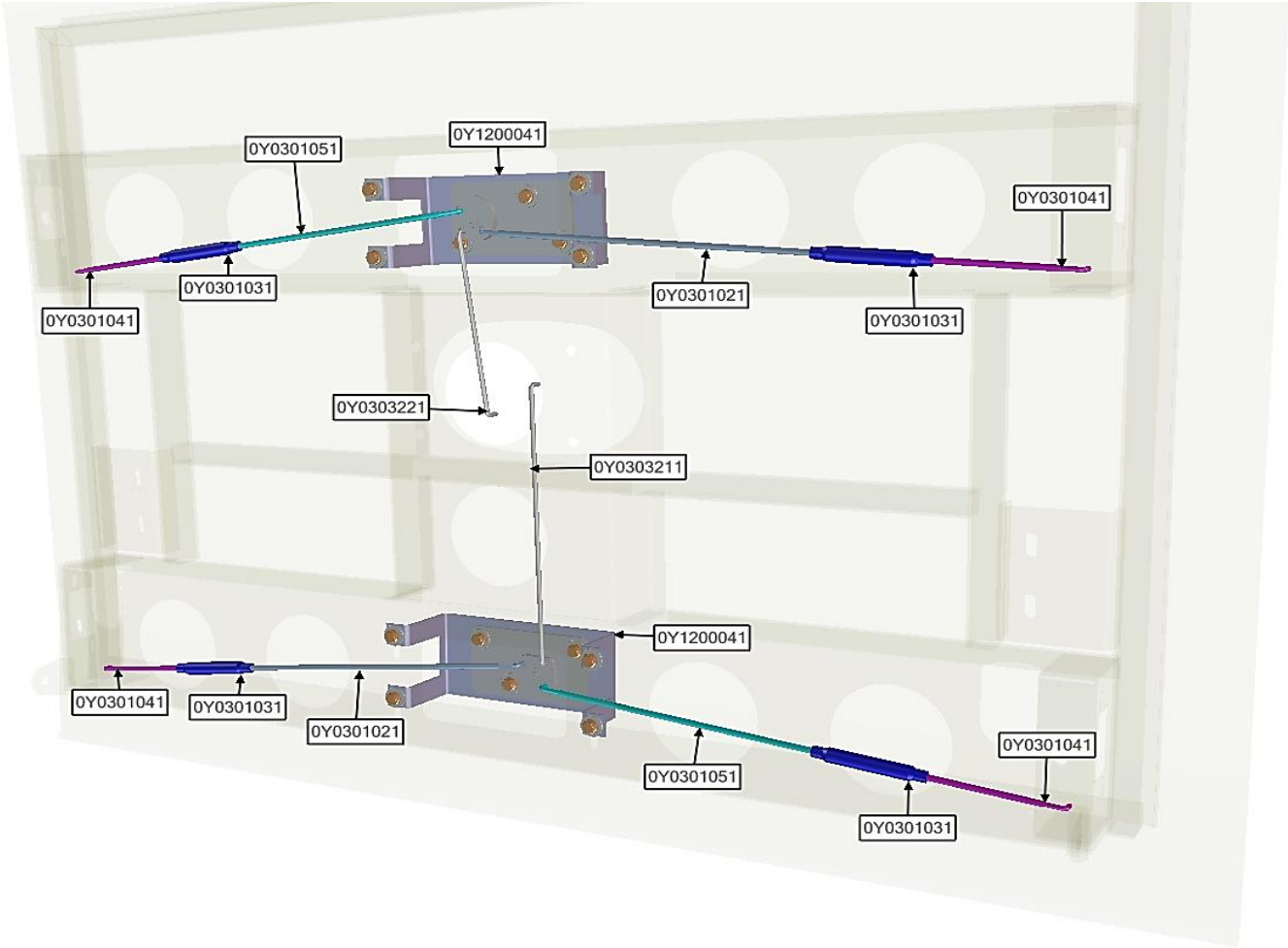

ASSB_NAME	PART NO.	NAME	QTY
LOCK, ASSY	0Y0301041	LINK ROB 04	4
	0Y0301031	LINK ROB 03	4
	0Y0301051	LINK ROB 05	2
	0Y0301021	LINK ROB 02	2
	0Y1200041	LINK	2
	0Y0303221	LINK ROB 07	1

ASSB_NAME	PART NO.	NAME	QTY

ASSB_NAME	PART NO.	NAME	QTY
	8060001116	WASHER Ø08	1
	8059000097	NUT 08125	1
	3S0332021	LIFTER ASSY	1

ASSB_NAME	PART NO.	NAME	QTY

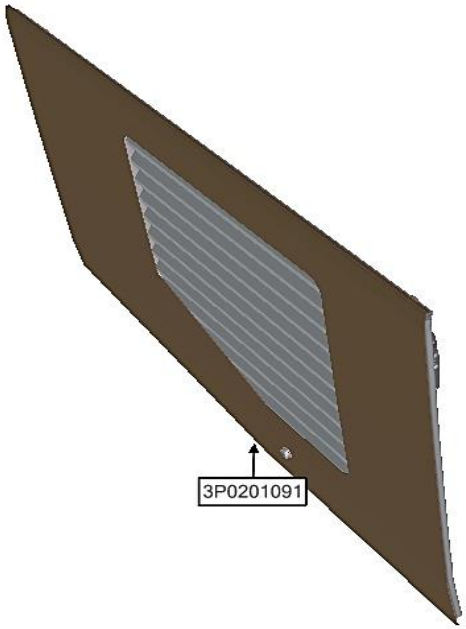

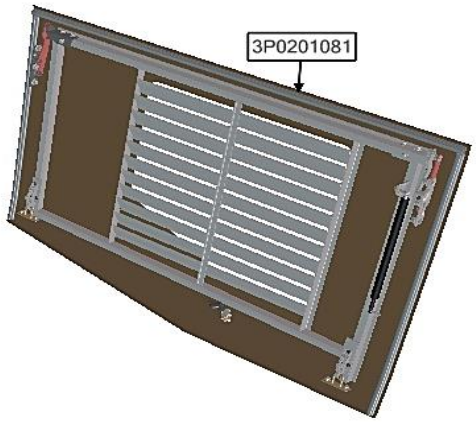

ASSB_NAME	PART NO.	NAME	QTY
RH GRID FLAP	3P0201091	RH GRID FLAP	1
	3P0201081	LH GRID FLAP	1

ASSB_NAME	PART NO.	NAME	QTY
RH GRID FLAP			

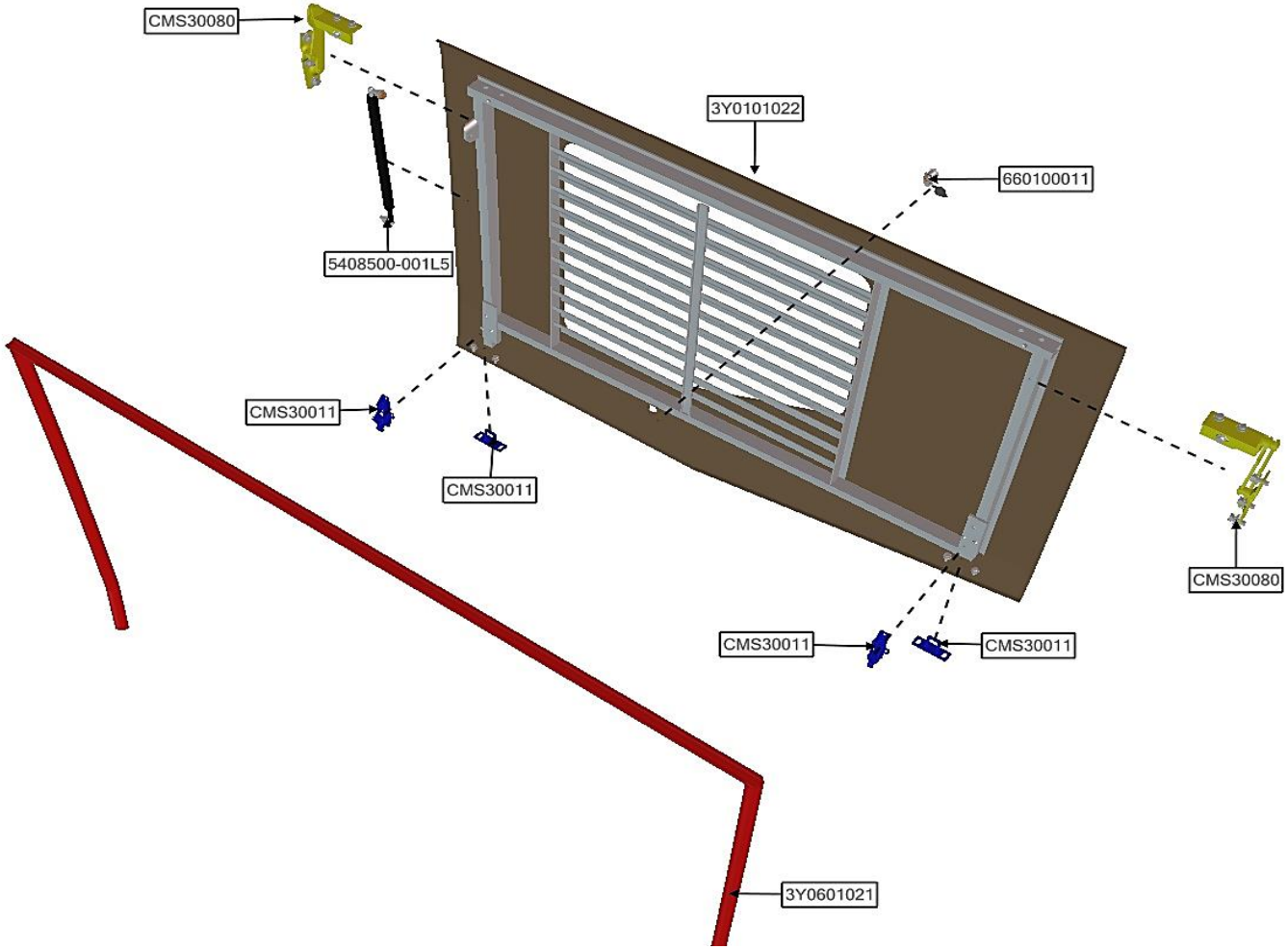

ASSB_NAME	PART NO.	NAME	QTY
RH GRID FLAP	CMS30080	FLAP HINGE (LH,RG)	2
	CMS30011	LOCK	4
	660100011	LOCK ASSY	1
	5408500-001L5	LIFTER ASSY	1
	3Y0601021	WEATHERSTRIP	1
	3Y0101022	RH GRID FLAP CAP	1

ASSB_NAME	PART NO.	NAME	QTY
RH GRID FLAP			

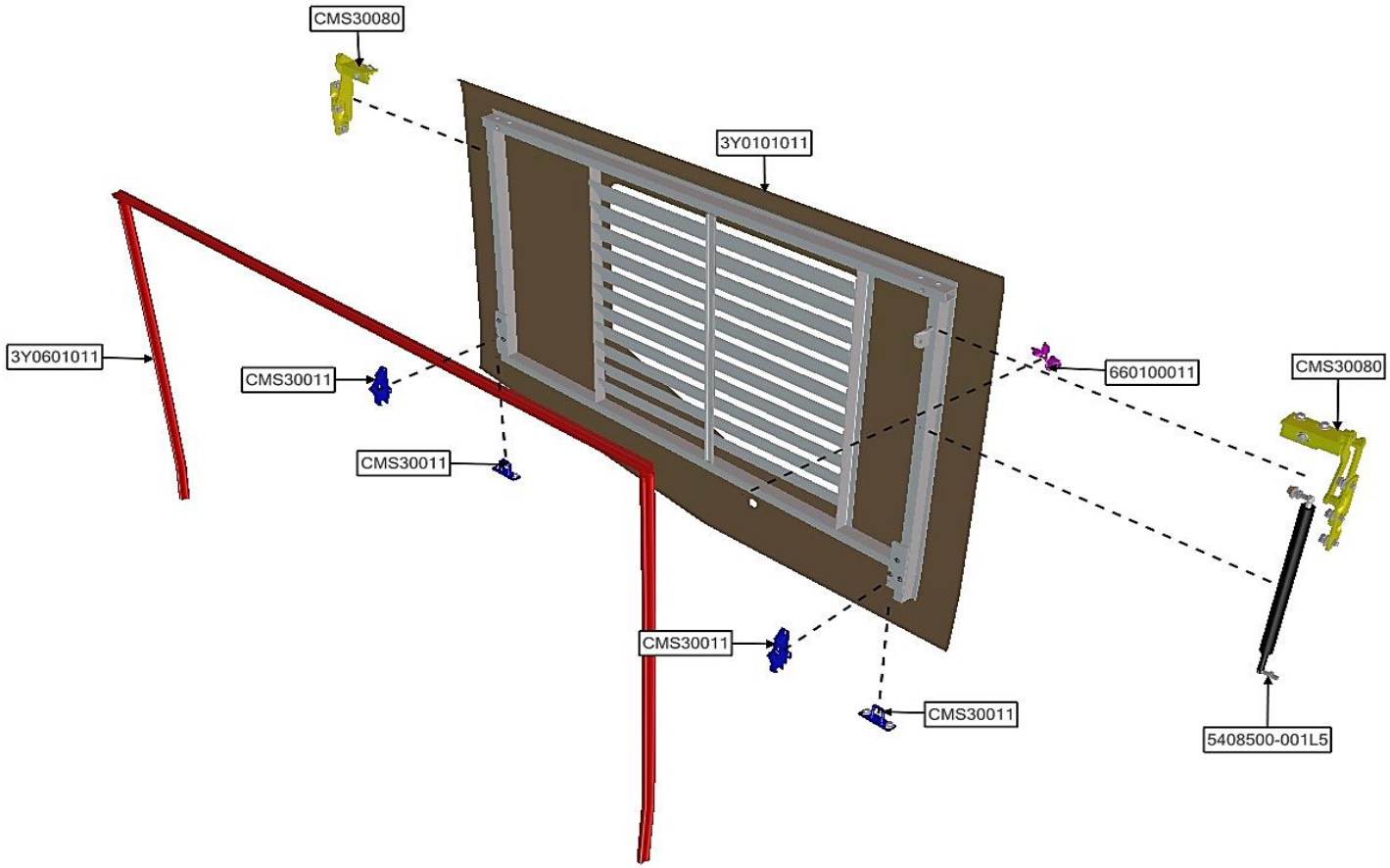

ASSB_NAME	PART NO.	NAME	QTY
LH GRID FLAP	CMS30080	FLAP HINGE (LH,RH)	2
	CMS30011	LOCK	4
	660100011	LOCK ASSY	1
	5408500-001L5	LIFTER ASSY	1
	3Y0601011	WEATHERSTRIP	1
	3Y0101011	LH GRID FLAP CAP	1

ASSB_NAME	PART NO.	NAME	QTY

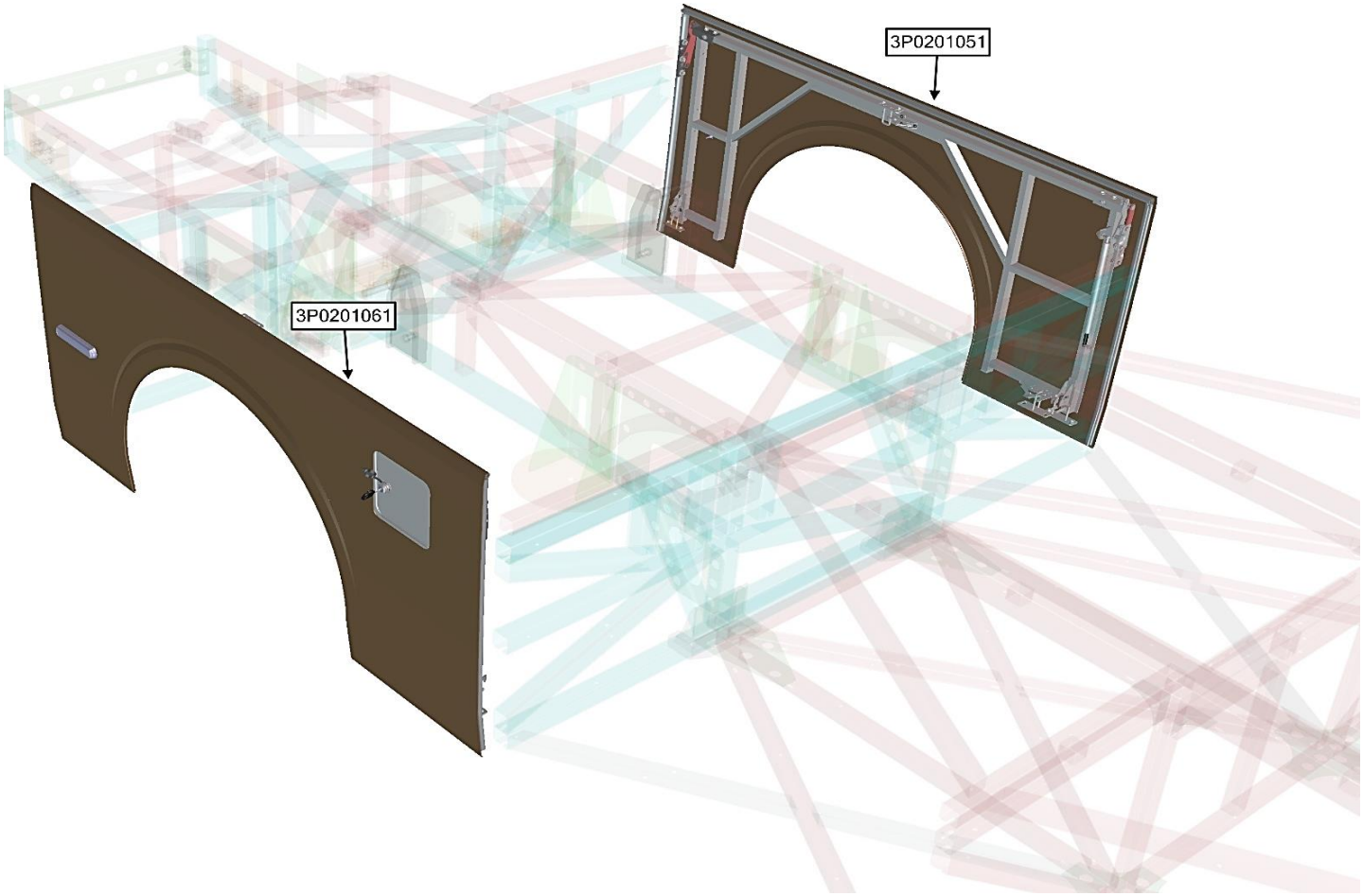

ASSB_NAME	PART NO.	NAME	QTY
REAR FENDER FLAP ASSY	3P0201061	RH REAR FENDER FLAP	1
	3P0201051	LH REAR FENDER FLAP	1

ASSB_NAME	PART NO.	NAME	QTY

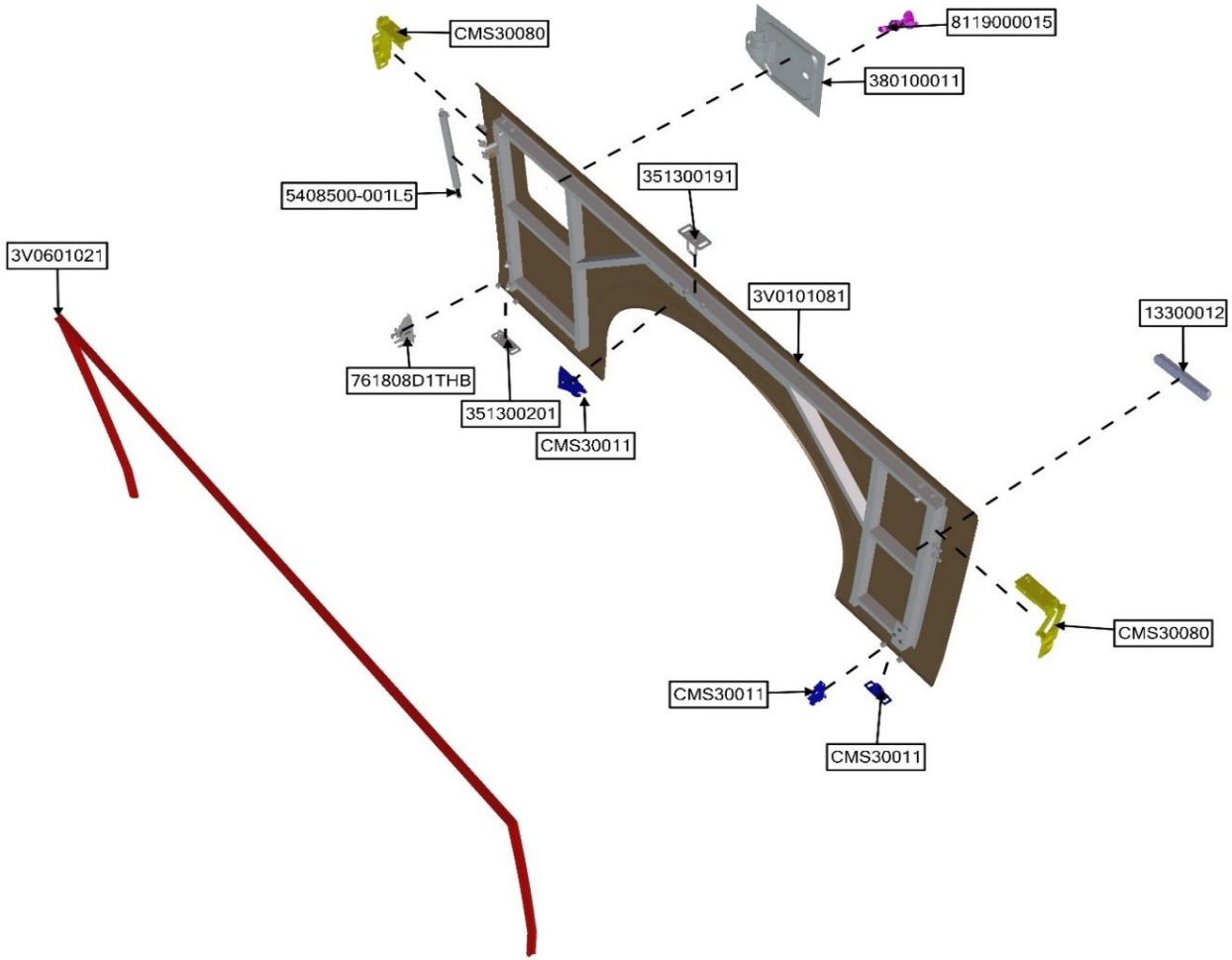

ASSB_NAME	PART NO.	NAME	QTY
RH REAR FENDER FLAP	CMS30080	FLAP HINGE (LH,RG)	2
	CMS30011	LOCK ASSY	3
	351300201	STRIKER ASSY 02	1
	351300191	STRIKER ASSY 01	1
	13300012	SIDE MARKER LAMP	1
	5408500-001L5	LIFTER ASSY	1

ASSB_NAME	PART NO.	NAME	QTY
RH REAR FENDER FLAP	761808D1THB	LOCK	1
	3V0601011	WEATHERSTRIP	1
	3V0101011	LH REAR FENDER FLAP COVER	1

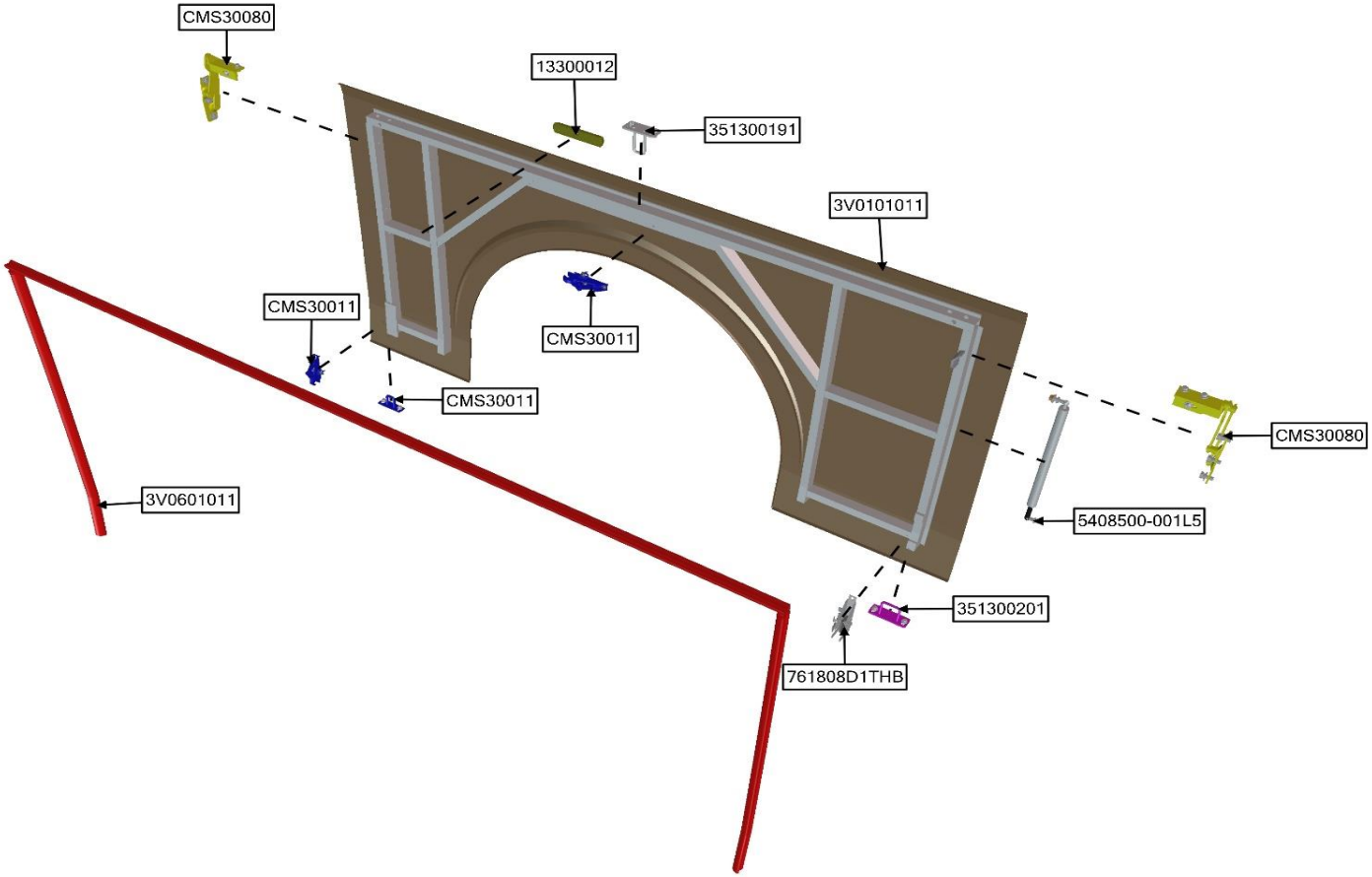

ASSB_NAME	PART NO.	NAME	QTY
LH REAR FENDER FLAP	CMS30080	FLAP HINGE (LH,RG)	2
	CMS30011	LOCK ASSY	3
	351300201	STRIKER ASSY 02	1
	351300191	STRIKER ASSY 01	1
	13300012	SIDE MARKER LAMP	1
	5408500-001L5	LIFTER ASSY	1

ASSB_NAME	PART NO.	NAME	QTY
LH REAR FENDER FLAP	761808D1THB	LOCK	1
	3V0601011	WEATHERSTRIP	1
	3V0101011	LH REAR FENDER FLAP COVER	1

ASSB_NAME	PART NO.	NAME	QTY
FRONT FENDER FLAP ASSY	3P0201031	FRONT FENDER FLAP	1
	3P0201021	FRONT FENDER FLAP	1

ASSB_NAME	PART NO.	NAME	QTY
FRONT FENDER FLAP ASSY			

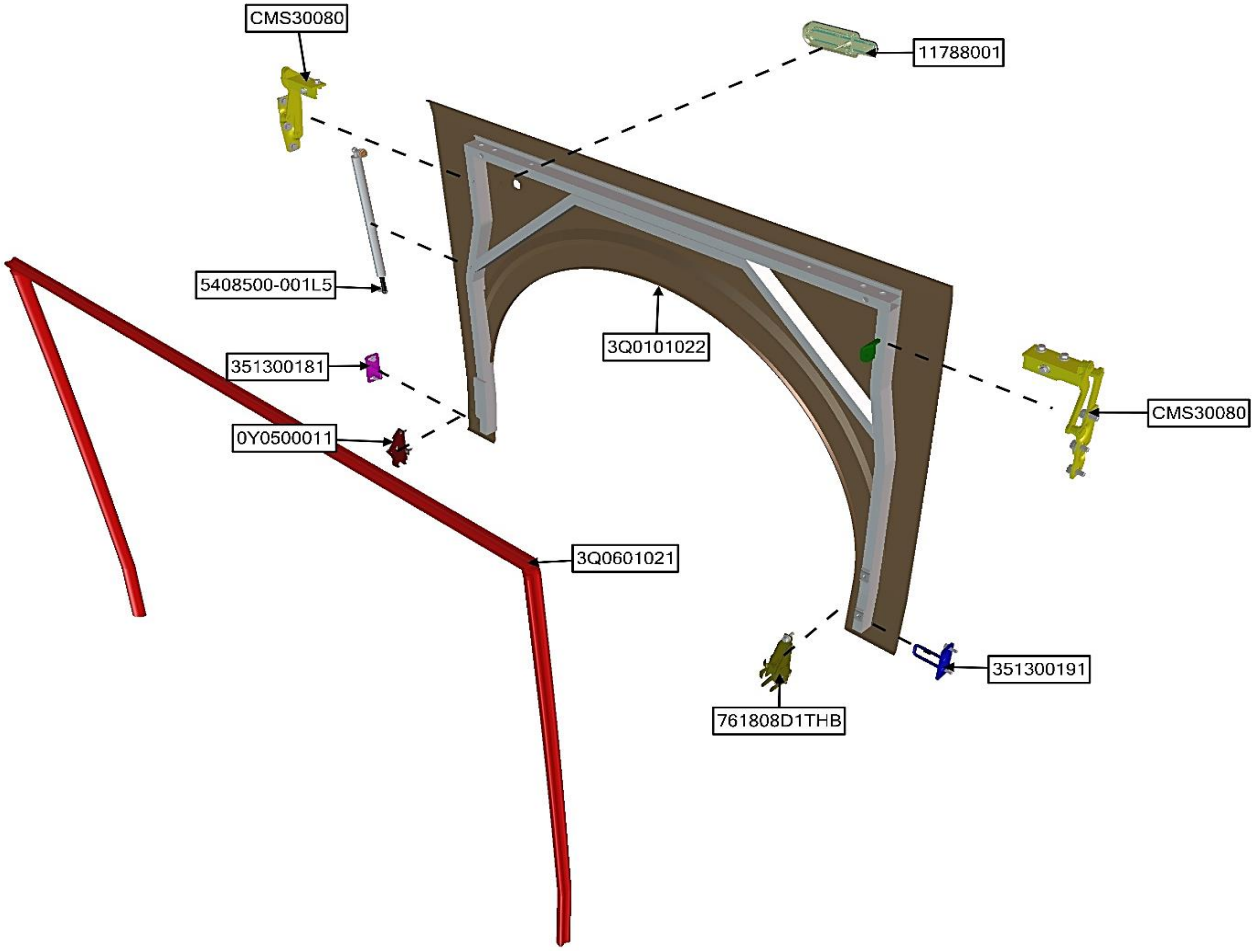

ASSB_NAME	PART NO.	NAME	QTY
FRONT FENDER FLAP RH	CMS30080	FLAP HINGE (LH,RG)	2
	351300191	LOCK	1
	351300181	FLASP	1
	11788001	SIDELAMP	1
	5408500-001L5	LIFTER ASSY	1
	761808D1THB	LOCK	1

ASSB_NAME	PART NO.	NAME	QTY
FRONT FENDER FLAP RH	3Q0601021	WEATHERSTRIP	1
	3Q0101022	RH FRONT FENDER FLAP COVER	1
	0Y0500011	LOCK	1

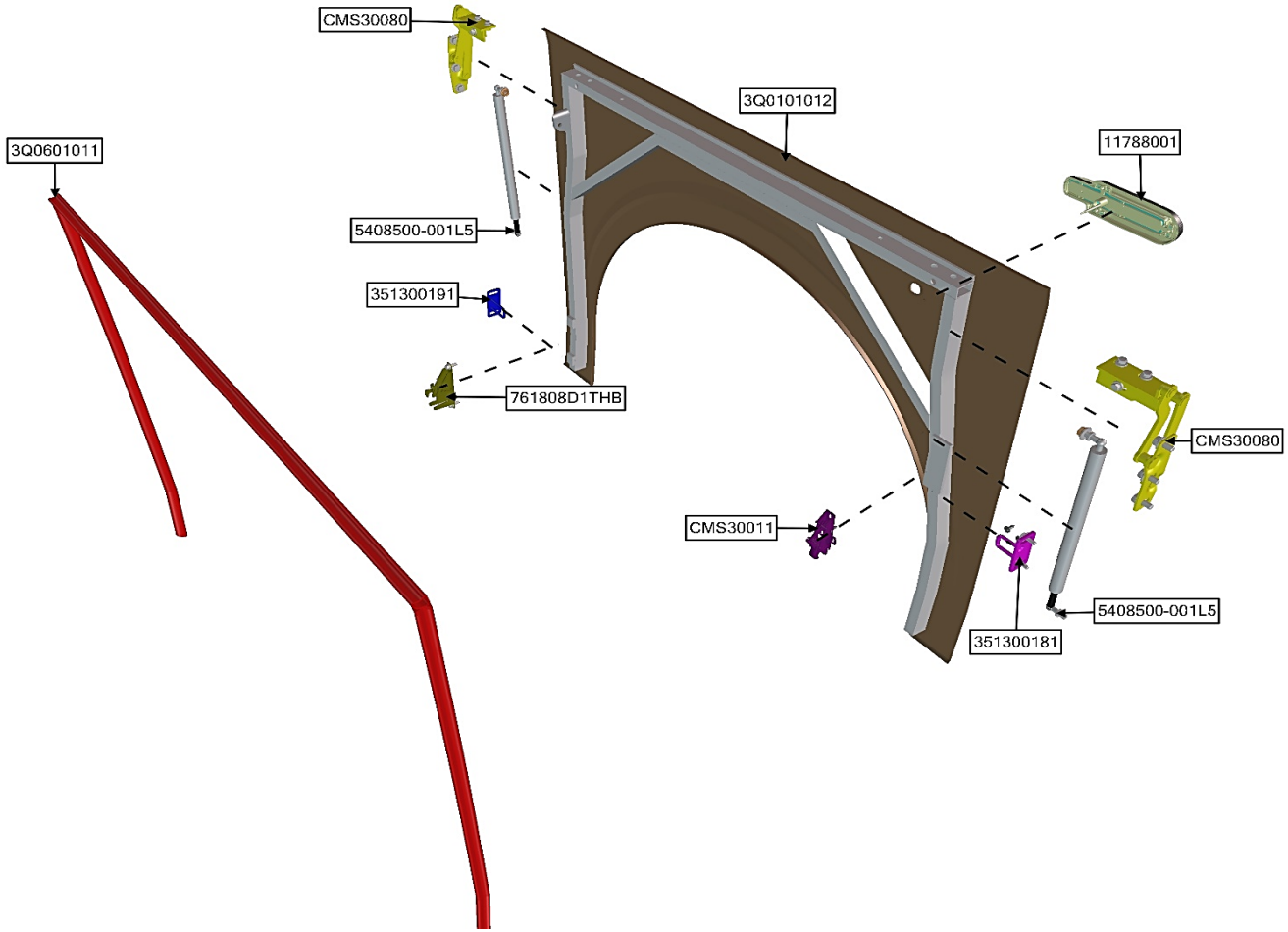

ASSB_NAME	PART NO.	NAME	QTY
FRONT FENDER FLAP LH	CMS30080	FLAP HINGE (LH,RG)	2
	CMS30011	LOCK	1
	351300191	FLASP 01	1
	351300181	FLASP	1
	11788001	SIDELAMP	1
	5408500-001L5	LIFTER ASSY	2

ASSB_NAME	PART NO.	NAME	QTY
FRONT FENDER FLAP LH	761808D1THB	LOCK	1
	3Q0601011	WEATHERSTRIP	1
	3Q0101012	LH FRONT FENDER FLAP COVER	1

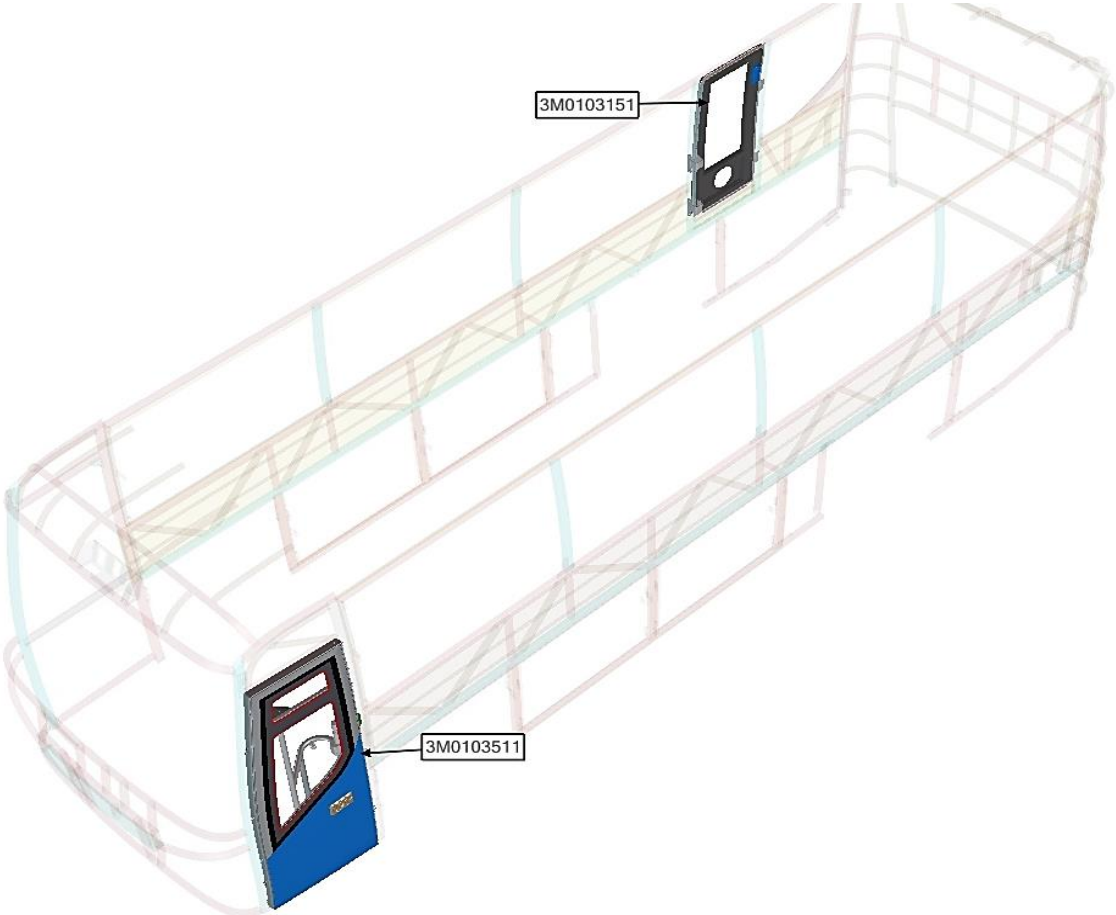

ASSB_NAME	PART NO.	NAME	QTY
DOOR ASSY	3M0103511	PASSENGER DOOR ASSY	1
	3M0103151	EMERGENCY DOOR	1

ASSB_NAME	PART NO.	NAME	QTY
DOOR ASSY			

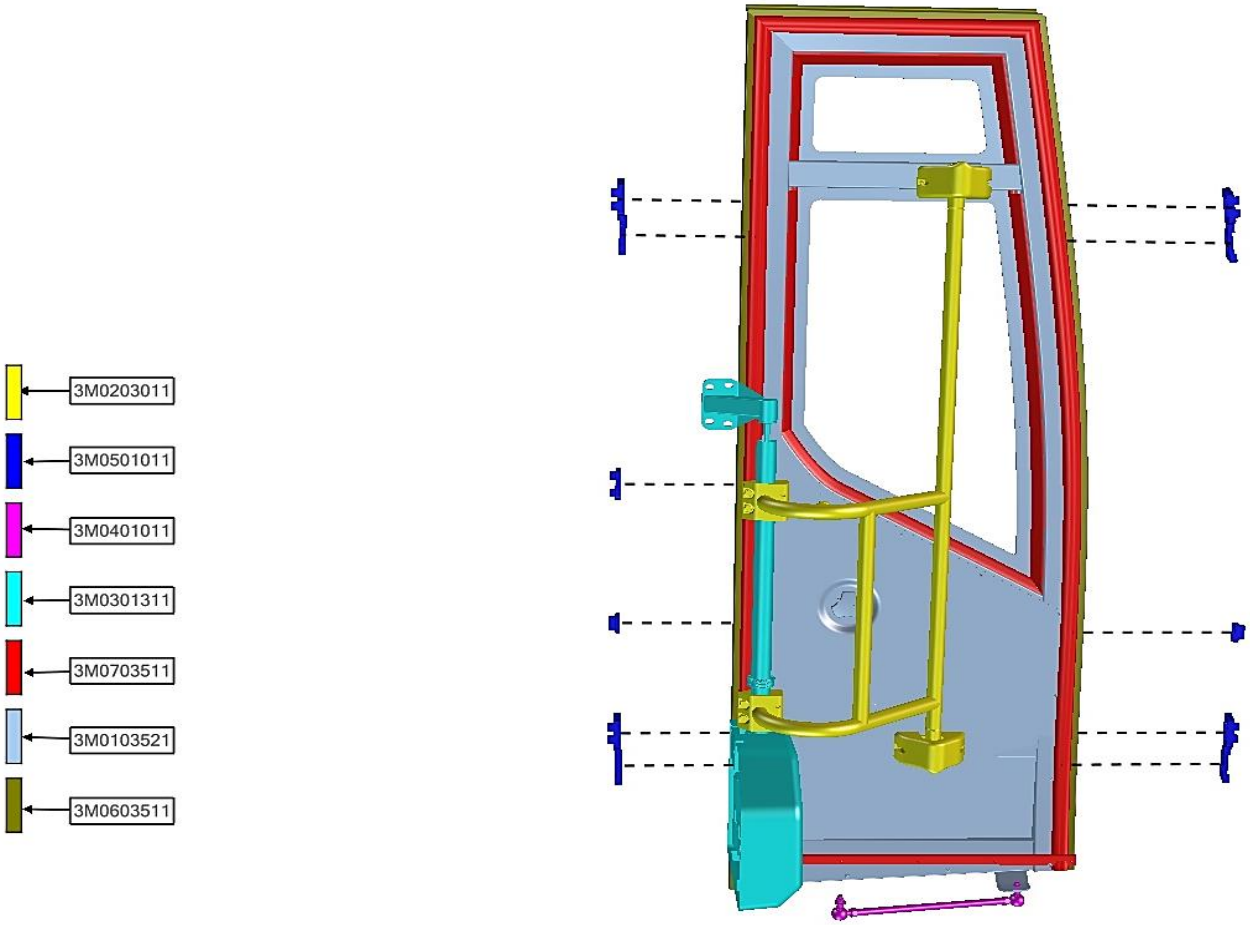

ASSB_NAME	PART NO.	NAME	QTY
PASSENGER DOOR ASSY	3M0703511	WEATHERSTRIP	1
	3M0103521	PASSENGER DOOR	1
	3M0603511	DOOR FRAME MOULDING	1
	3M0301311	PASSENGER DOOR PUMB PILLAR ASSY	1
	3M0401011	PASSENGER DOOR TURNBUCKLE ASSY	1
	3M0501011	STOPPER ASSY	1

ASSB_NAME	PART NO.	NAME	QTY
PASSENGER DOOR ASSY			

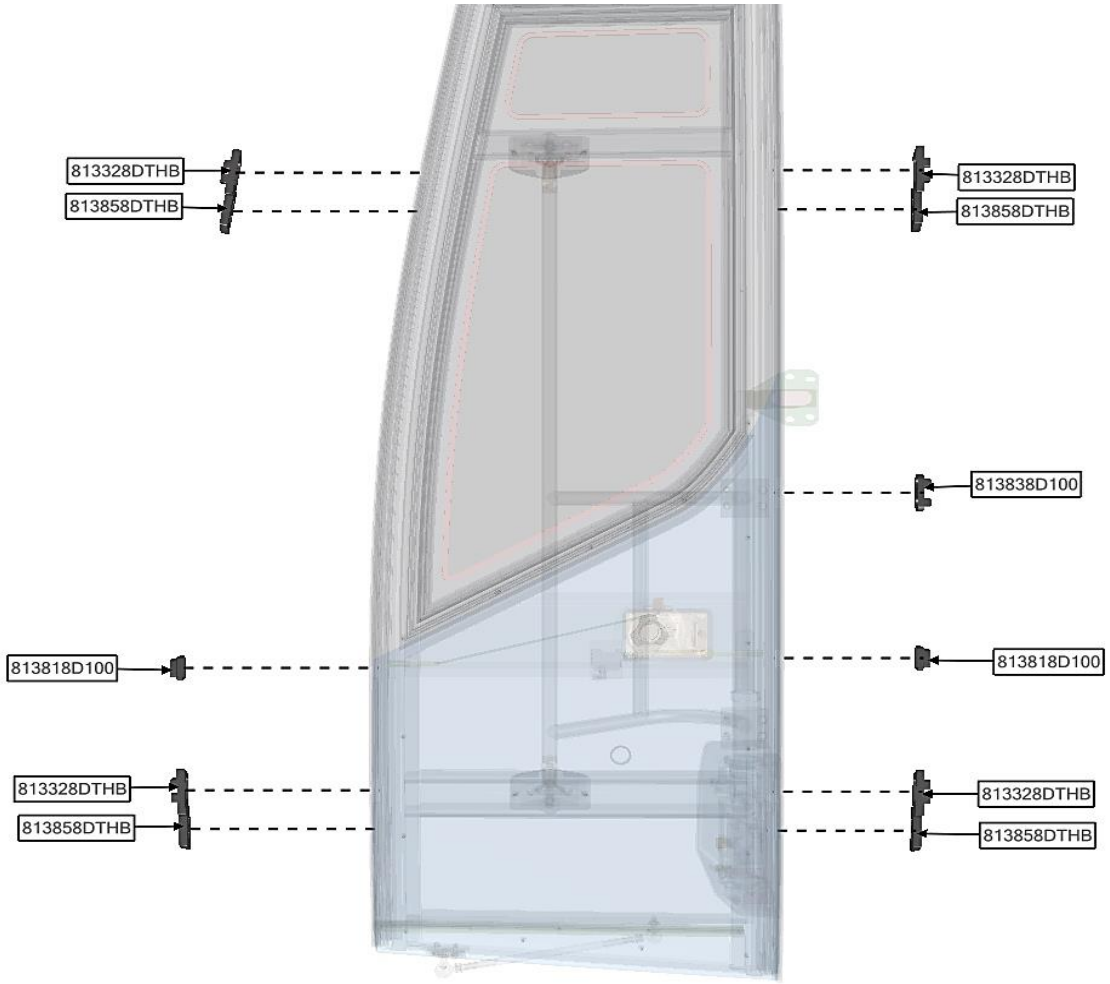

ASSB_NAME	PART NO.	NAME	QTY
STOPPER ASSY	813328DTHB	STOPPER ASSY	4
	813858DTHB	STOPPER ASSY	4
	813818D100	STOPPER ASSY	2
	813838D100	STOPPER ASSY	1

ASSB_NAME	PART NO.	NAME	QTY
STOPPER ASSY			

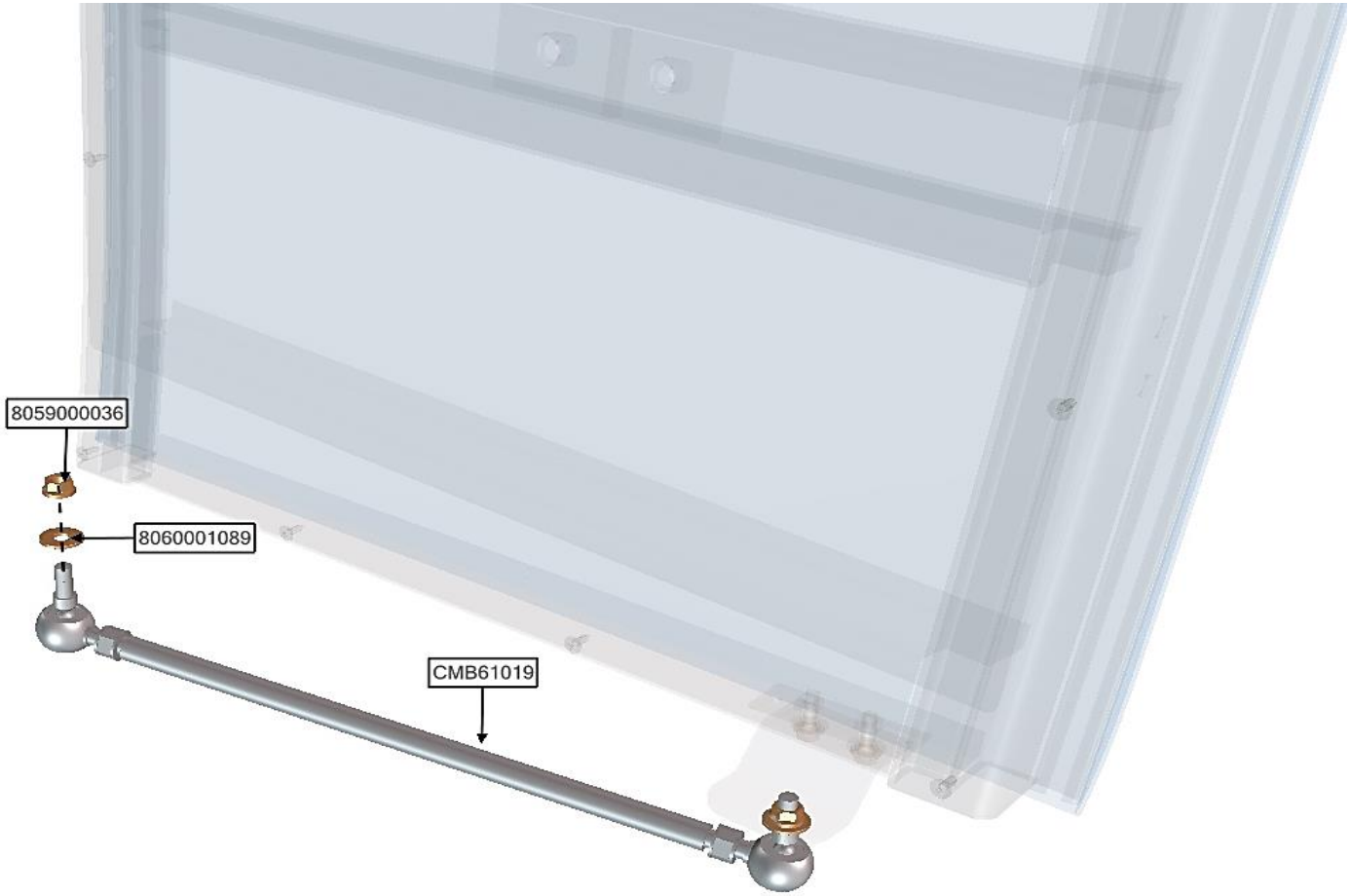

ASSB_NAME	PART NO.	NAME	QTY
PASSENGER DOOR TURNBUCKLE ASSY	CMB61019	PASSENGER DOOR TURNBUCKLE	1
	8059000036	NUT 10125	1
	8060001089	WASHER Ø10	1

ASSB_NAME	PART NO.	NAME	QTY
PASSENGER DOOR TURNBUCKLE ASSY			

ASSB_NAME	PART NO.	NAME	QTY
PASSENGER DOOR PUMB PILLAR ASSY	757308D100	DOOR RELAY	1
	YDW338-300	DOOR PUMP	1

ASSB_NAME	PART NO.	NAME	QTY
PASSENGER DOOR PUMB PILLAR ASSY			

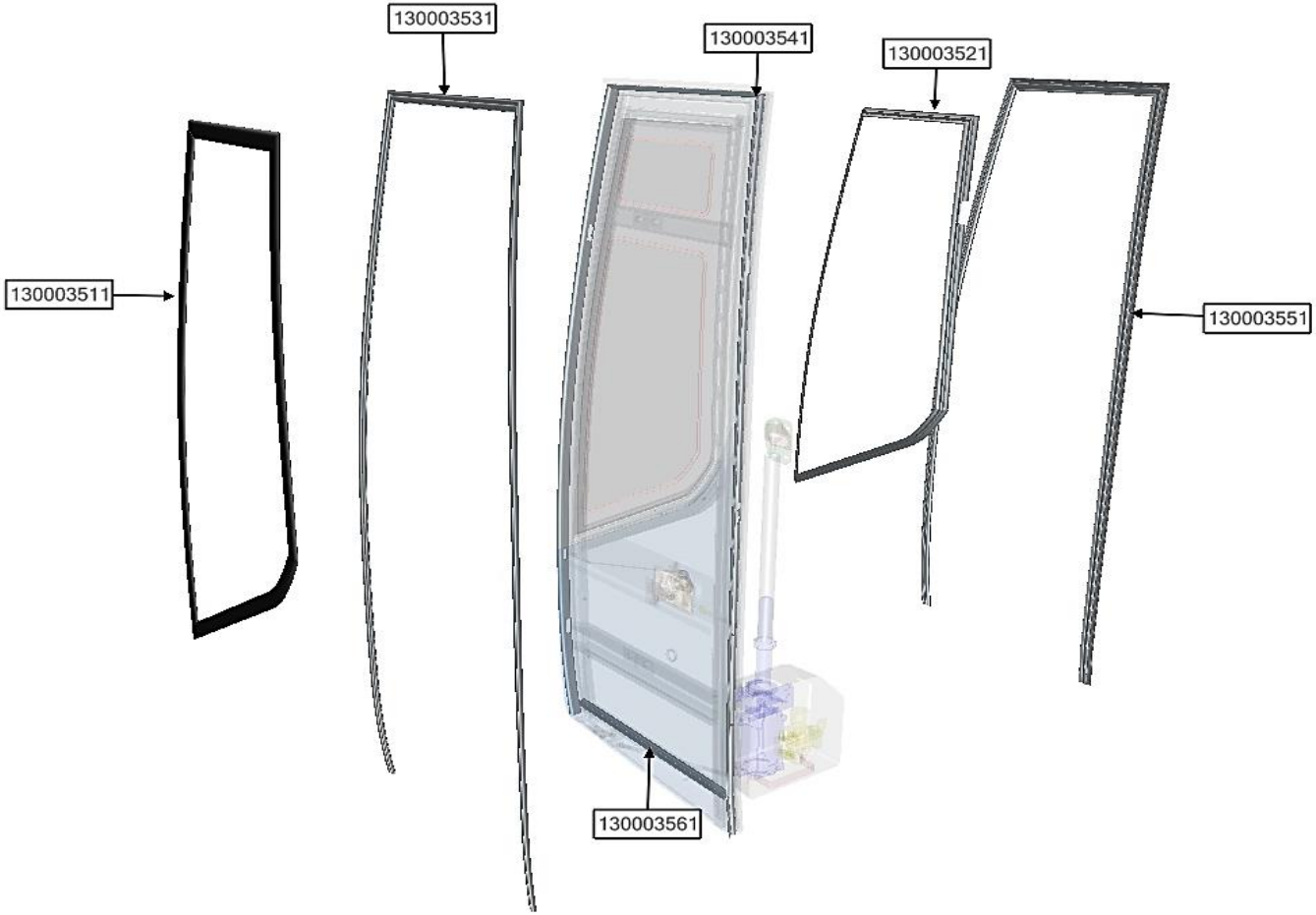

ASSB_NAME	PART NO.	NAME	QTY
WEATHERSTRIP	130003541	WEATHERSTRIP	1
	130003551	DOOR WEATHERSTRIP	1
	130003531	WEATHERSTRIP	1
	130003521	WEATHERSTRIP	1
	130003511	WEATHERSTRIP	1
	130003561	WEATHERSTRIP	1

ASSB_NAME	PART NO.	NAME	QTY
WEATHERSTRIP			

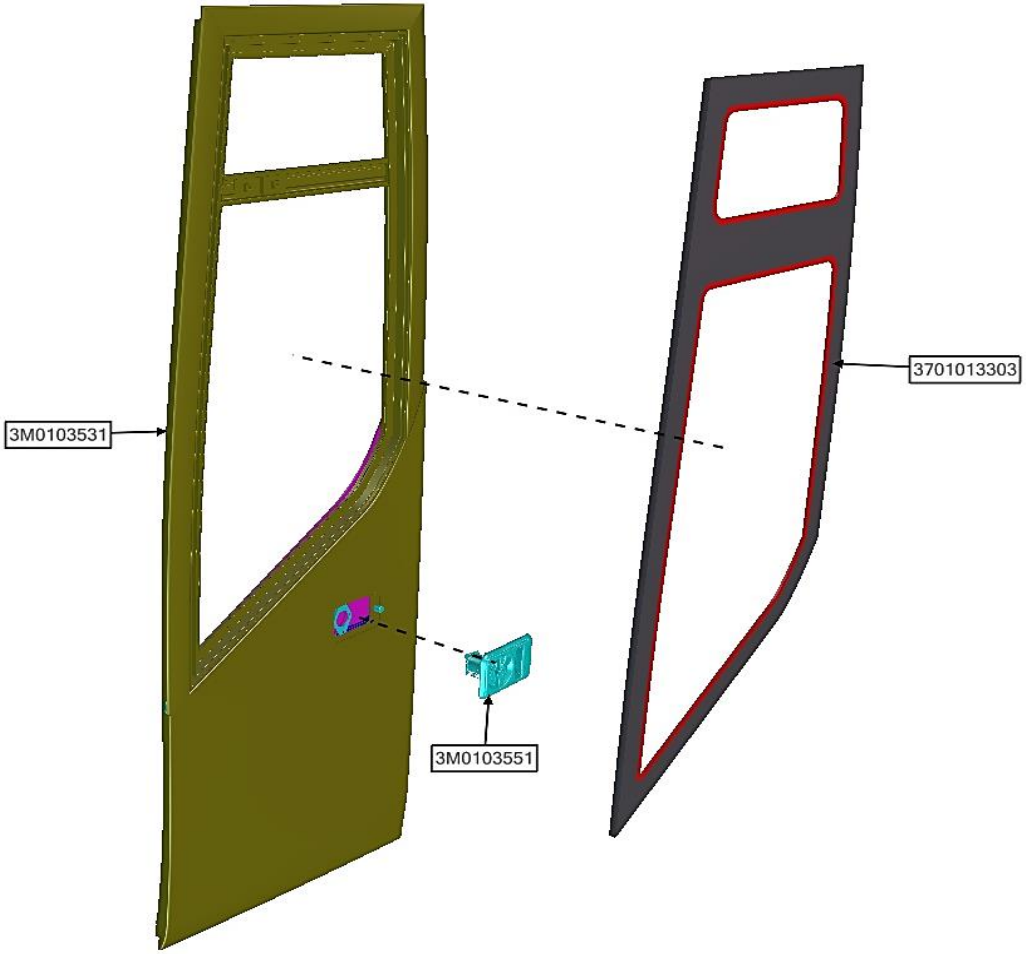

ASSB_NAME	PART NO.	NAME	QTY
PASSENGER DOOR	3701013303	GLASS	1
	3M0103551	HANDE	1
	3M0103531	COVER	1

ASSB_NAME	PART NO.	NAME	QTY

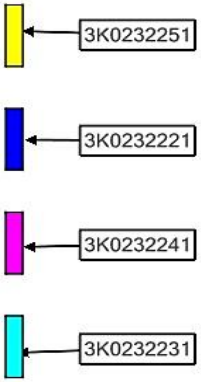

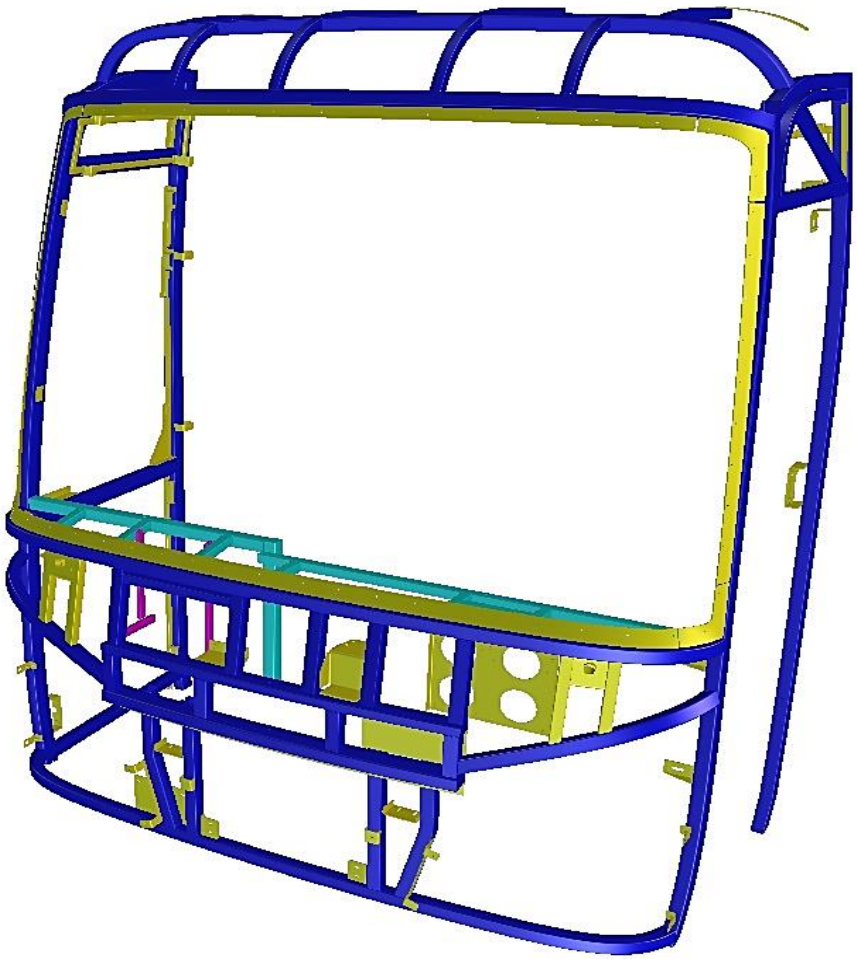

ASSB_NAME	PART NO.	NAME	QTY
FRONT FRAME ASSY	3K0232231	DASHBOARD FRAME	1
	3K0232241	CLUTCH PEDAL FRAME	1
	3K0232221	FRONT FRAME	1
	3K0232251	CONNECTING ITEM	1

ASSB_NAME	PART NO.	NAME	QTY
FRONT FRAME ASSY			

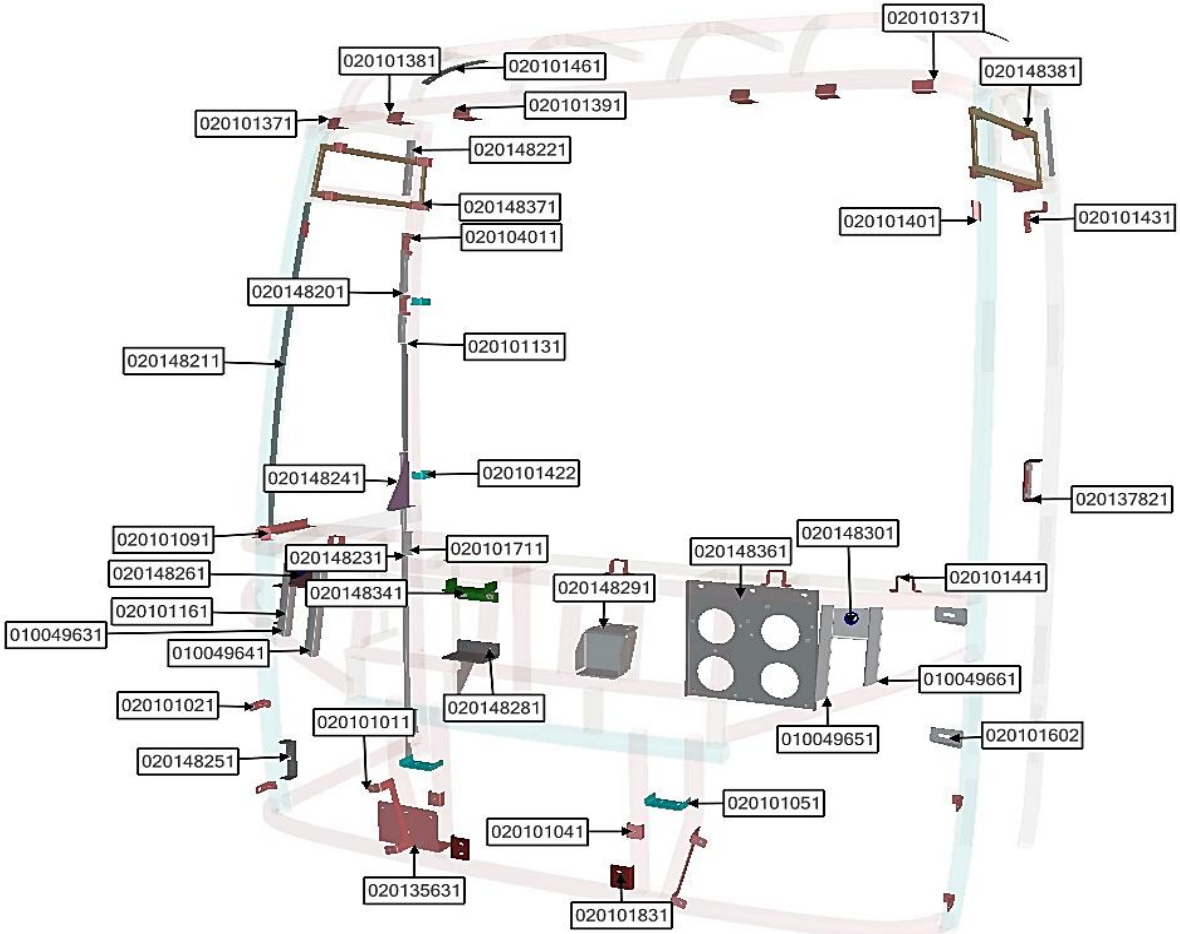

ASSB_NAME	PART NO.	NAME	QTY
CONNECTING ITEM	020101441	DASHBOARD BRACKET	6
	020101021	FRONT bumper BRACKET 02	4
	020101011	FRONT bumper BRACKET 01	2
	020148221	GLASS BRACKET 04	2
	020101711	STOPPER BRACKET	2
	020101041	GALLANT BRACKET	2
	020148251	ITEM HINGE BRACKET 02	1

ASSB_NAME	PART NO.	NAME	QTY
CONNECTING ITEM	020101831	GALLANT HINGE BRACKET	2
	020101051	GALLANT BRACKET 01	2
	020101422	SEATBELT BRACKET	2
	020104011	PILLAR COVER BRACKET 02	2
	020101401	PILLAR COVER BRACKET 01	2
	020101602	HANDLE BRACKET	2
	010049651	WINDSCREEN WIPER SQUARE PIPE 0	1

ASSB_NAME	PART NO.	NAME	QTY
CONNECTING ITEM	020101461	SIDE SPOILERS BRACKET	2
	020101391	HEADLINING BRACKET 09	2
	020101381	HEADLINING BRACKET 08	2
	020148301	WINDSCREEN WIPER BRACKET 07	1
	020148281	WINDSCREEN WIPER BRACKET 05	1
	020148291	WINDSCREEN WIPER BRACKET 06	1
	020148261	WINDSCREEN WIPER BRACKET 04	1
	020148341	WINDSCREEN WIPER BRACKET 03	1
	020148231	COVER BRACKET	1
	010049661	WINDSCREEN WIPER SQUARE PIPE 04	1
	020148201	GLASS BRACKET 01	1
	020148211	GLASS BRACKET 02	1
	020101091	GLASS BRACKET 03	1
	020135631	WATER FLUID TANK BRACKET	1

ASSB_NAME	PART NO.	NAME	QTY
CONNECTING ITEM	020101161	ITEM HINGE BRACKET 01	1
	020101131	GLASS FRAME BRACKET	1
	020148241	DRIVER DOOR BRACKET	1
	010049641	WINDSCREEN WIPER SQUARE PIPE 0	1
	020101371	FRONT HEADLINING BRACKET 07	1
	020101371	FRONT HEADLINING BRACKET 07	1
	020148371	HEADLINING FRAME (RH)	1
	020148381	HEADLINING FRAME (LH)	1
	020137821	DOOR PUMP BRACKET 01	1
	020148361	CONTROL BOX BRACKET	1
	020101431	DOOR VALVE BRACKET	1
	010049631	WINDSCREEN WIPER SQUARE PIPE 0	1

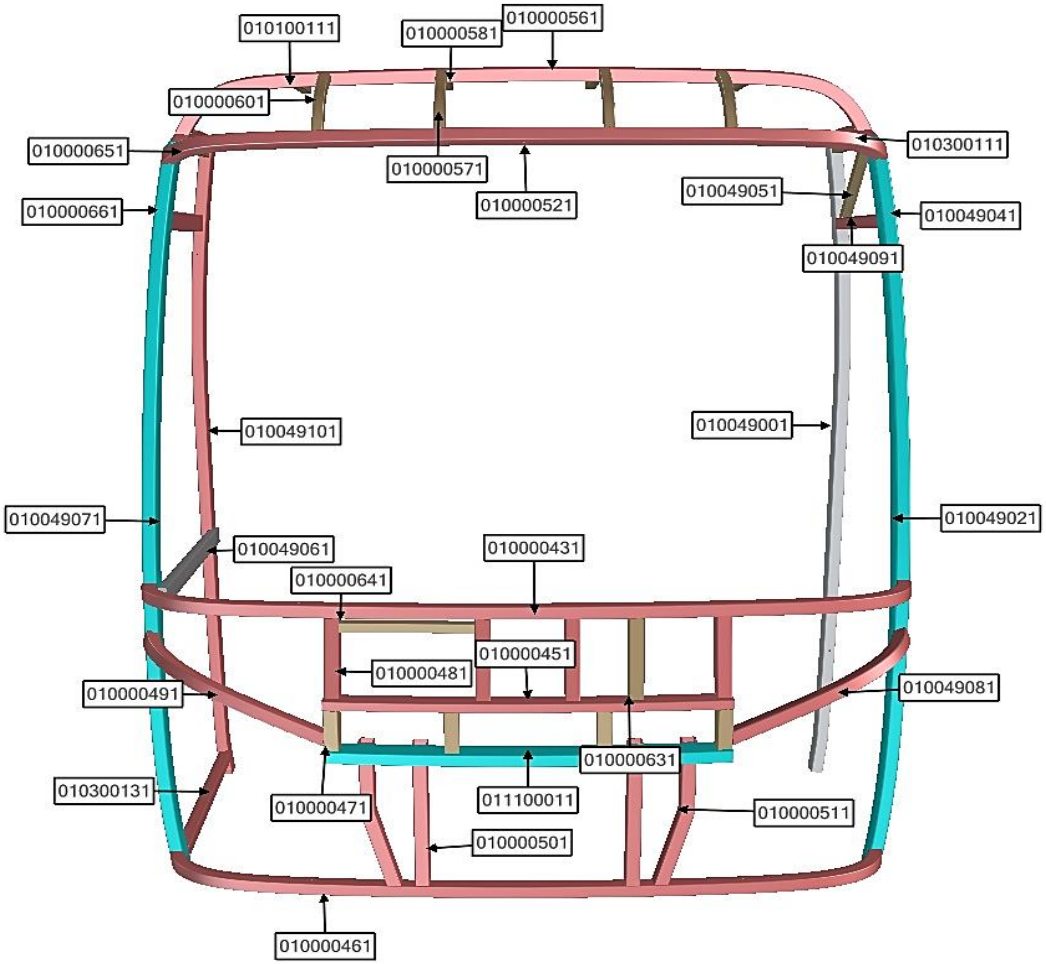

ASSB_NAME	PART NO.	NAME	QTY
FRONT FRAME	010000481	FRONT SQUARE PIPE 08	4
	010000471	FRONT SQUARE PIPE 07	4
	010000601	FRONT SQUARE PIPE 20	2
	010100111	FRONT SQUARE PIPE 19	2
	010000581	FRONT SQUARE PIPE 18	2
	010000571	FRONT SQUARE PIPE 17	2
	010049071	FRONT SQUARE PIPE 27	1

ASSB_NAME	PART NO.	NAME	QTY
FRONT FRAME	010300111	FRONT SQUARE PIPE 14	2
	010000511	FRONT SQUARE PIPE 11	2
	010000501	FRONT SQUARE PIPE 10	2
	010000461	FRONT SQUARE PIPE 06	1
	010000451	FRONT SQUARE PIPE 05	1
	011100011	FRONT SQUARE PIPE 04	1
	010049091	FRONT SQUARE PIPE 29	1

ASSB_NAME	PART NO.	NAME	QTY
FRONT FRAME	010000431	FRONT SQUARE PIPE 03	1
	010300131	FRONT SQUARE PIPE 22	1
	010049101	FRONT SQUARE PIPE 30	1
	010049021	FRONT SQUARE PIPE 02	1
	010049001	FRONT SQUARE PIPE 01	1
	010049051	FRONT SQUARE PIPE 15	1
	010000651	FRONT SQUARE PIPE 25	1
	010049081	FRONT SQUARE PIPE 28	1

ASSB_NAME	PART NO.	NAME	QTY
FRONT FRAME	010000661	FRONT SQUARE PIPE 26	1
	010049041	FRONT SQUARE PIPE 13	1
	010049061	FRONT SQUARE PIPE 21	1
	010000641	FRONT SQUARE PIPE 24	1
	010000631	FRONT SQUARE PIPE 23	1
	010000561	FRONT SQUARE PIPE 16	1
	010000521	FRONT SQUARE PIPE 12	1
	010000491	FRONT SQUARE PIPE 09	1

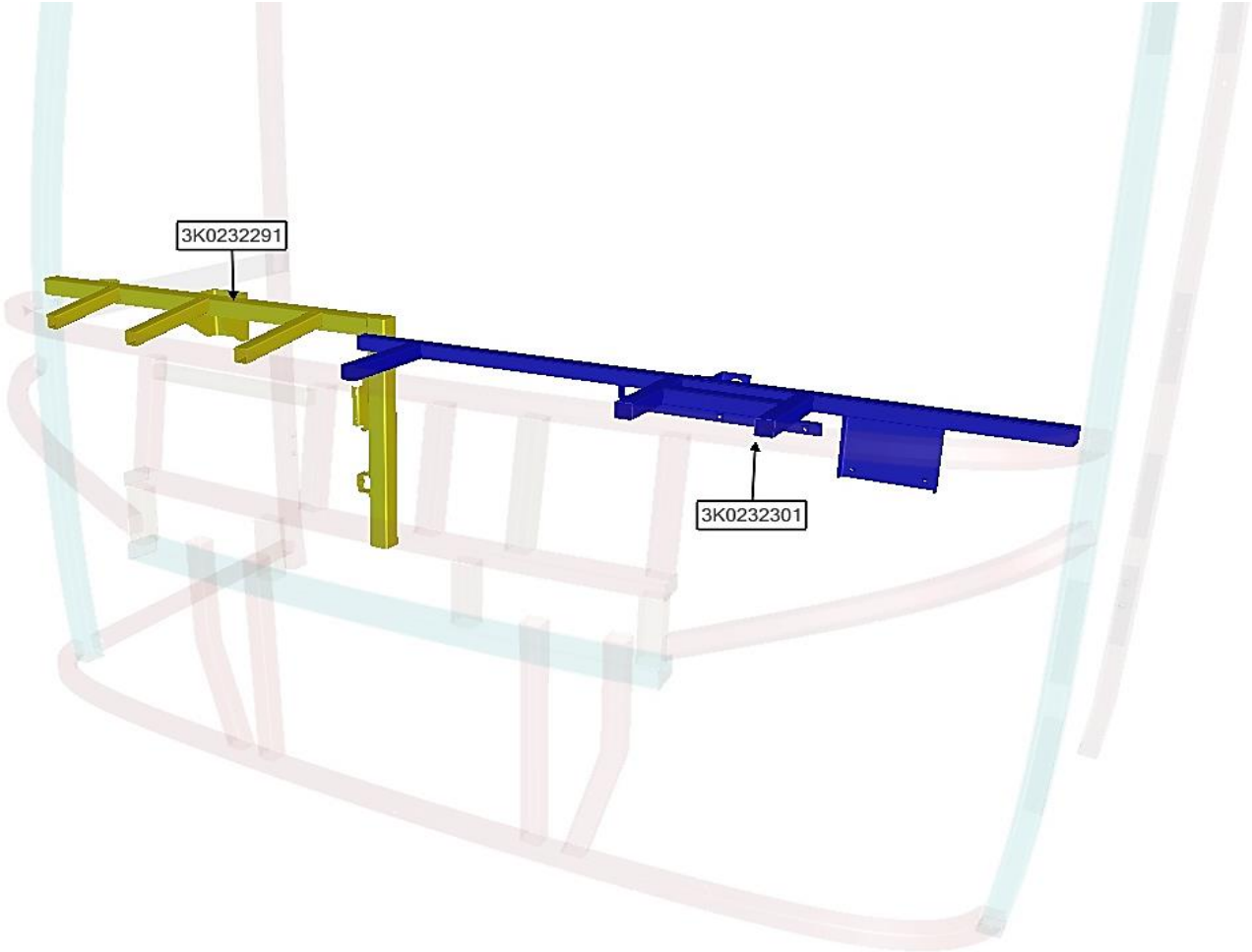

ASSB_NAME	PART NO.	NAME	QTY
DASHBOARD FRAME	3K0232301	DASHBOARD FRAME 02	1
	3K0232291	DASHBOARD FRAME 01	1

ASSB_NAME	PART NO.	NAME	QTY
DASHBOARD FRAME			

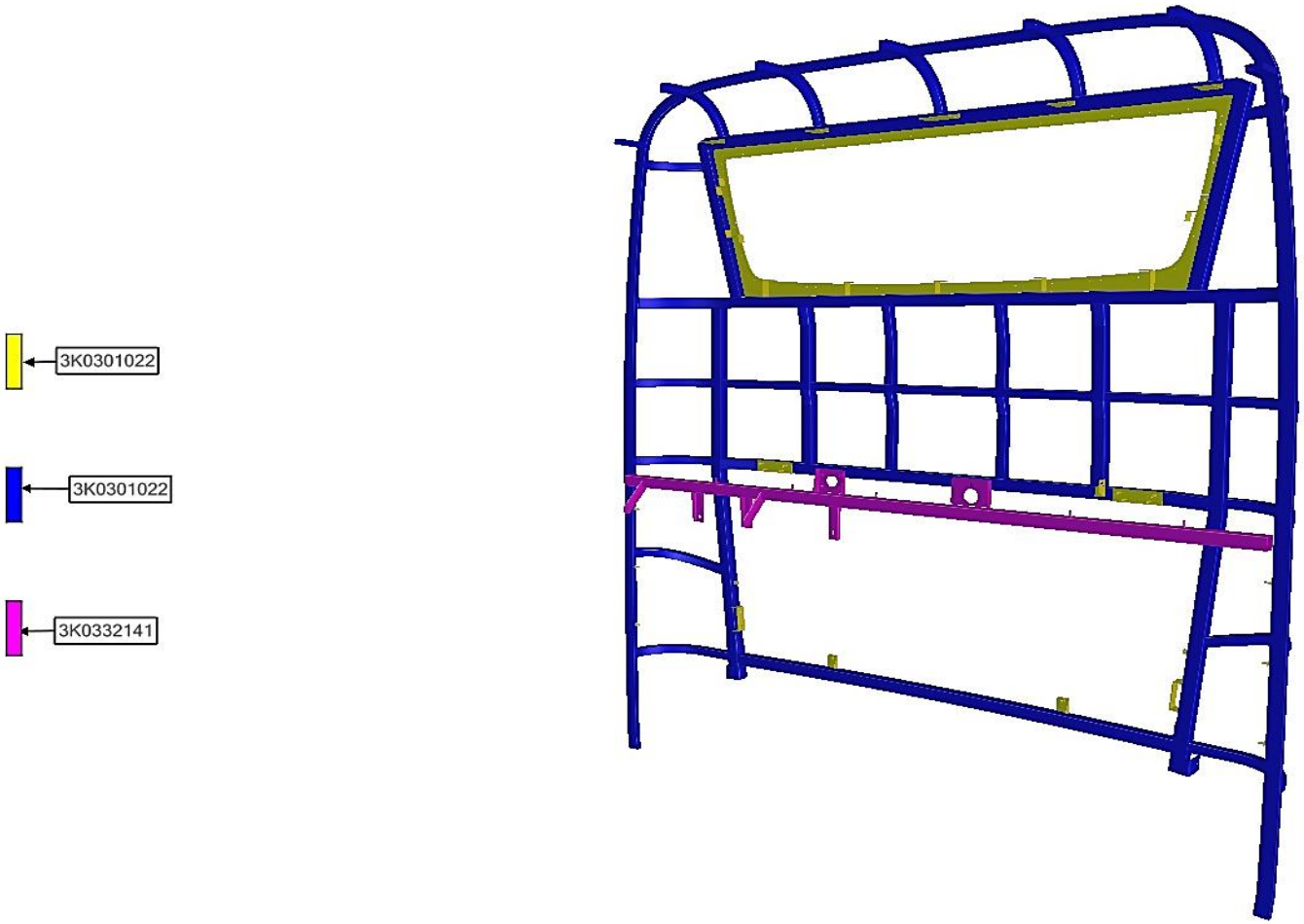

ASSB_NAME	PART NO.	NAME	QTY
REAR FRAME ASSY	3K0332141	EXPANDING WATER TANK SQUARE PIP	1
	3K0301022	REAR FRAME	1
	3K0332131	CONNECTIVE ITEM	1

ASSB_NAME	PART NO.	NAME	QTY
REAR FRAME ASSY			

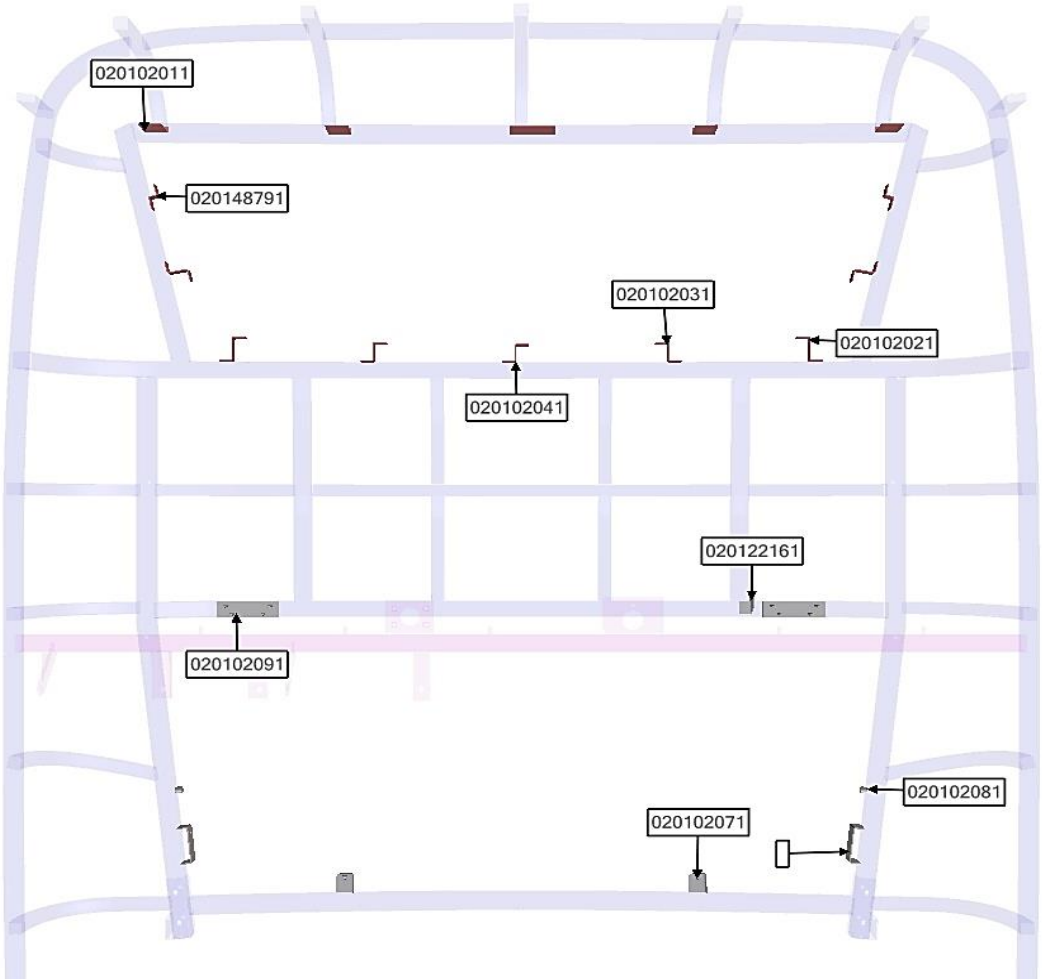

ASSB_NAME	PART NO.	NAME	QTY
CONNECTIVE ITEM	020102011	REAR HEADLINING BRACKET 04	6
	020102031	REAR HEADLINING BRACKET 02	4
	020102091	REAR FLAP HINGE BRACKET	2
	020102021	REAR HEADLINING BRACKET 01	2
		LOCK REAR FLAP BRACKET 02	2
	020102071	REAR STEP BUMPER BRACKET	2
	020102081	REAR FLAP TURNBUCKLE BRACKET	2

ASSB_NAME	PART NO.	NAME	QTY
CONNECTIVE ITEM	020148791	REAR HEADLINING BRACKET 05	2
	020102041	REAR HEADLINING BRACKET 03	1
	020122161	REAR FLAP SWITCH BRACKET	1

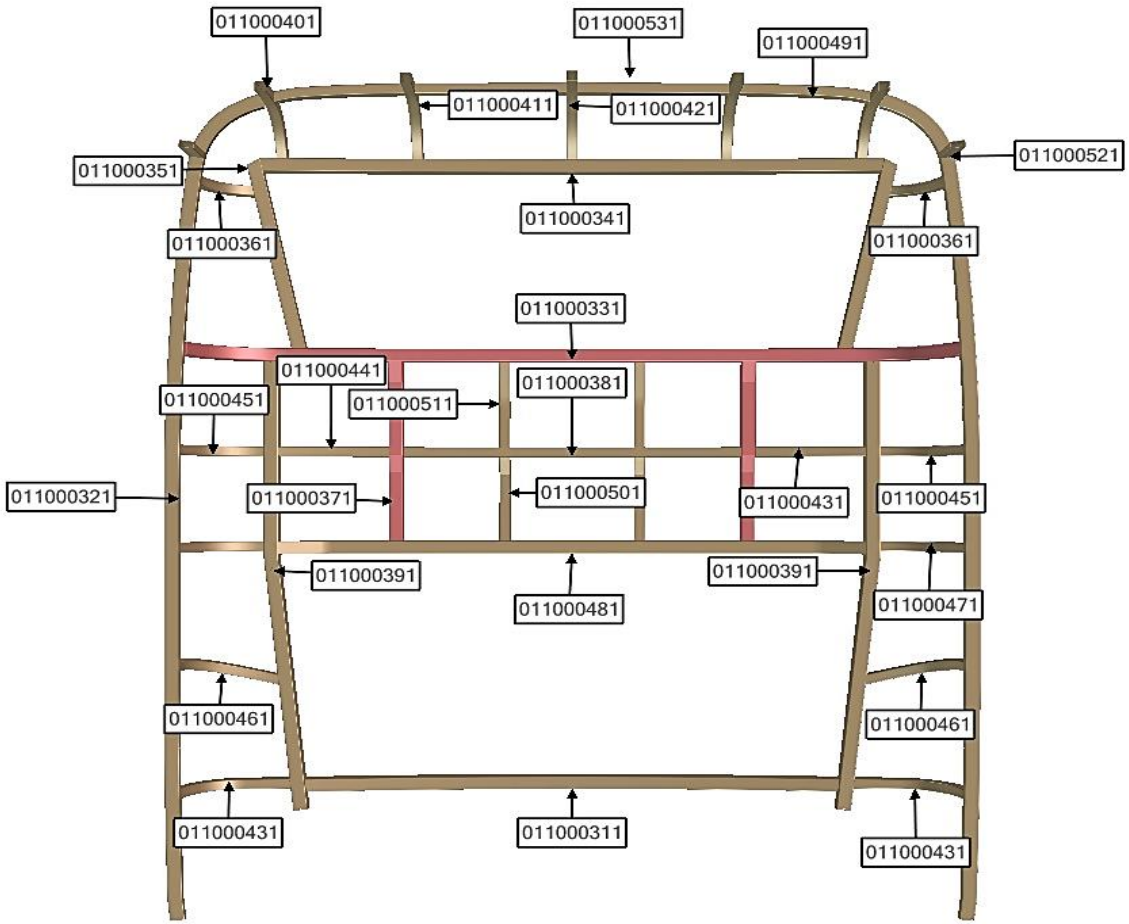

ASSB_NAME	PART NO.	NAME	QTY
REAR FRAME	011000351	REAR SQUARE PIPE 05	2
	011000531	REAR SQUARE PIPE 23	2
	011000521	REAR SQUARE PIPE 22	2
	011000511	REAR SQUARE PIPE 21	2
	011000501	REAR SQUARE PIPE 20	2
	011000491	REAR SQUARE PIPE 19	2
	011000431	REAR SQUARE PIPE 13	1

ASSB_NAME	PART NO.	NAME	QTY
REAR FRAME	011000471	REAR SQUARE PIPE 17	2
	011000321	REAR SQUARE PIPE 02	2
	011000411	REAR SQUARE PIPE 11	2
	011000401	REAR SQUARE PIPE 10	2
	011000371	REAR SQUARE PIPE 07	2
	011000361	REAR SQUARE PIPE 06	1
	011000431	REAR SQUARE PIPE 13	1

ASSB_NAME	PART NO.	NAME	QTY
REAR FRAME	011000341	REAR SQUARE PIPE 04	1
	011000331	REAR SQUARE PIPE 03	1
	011000481	REAR SQUARE PIPE 18	1
	011000461	REAR SQUARE PIPE 16	1
	011000461	REAR SQUARE PIPE 16	1
	011000451	REAR SQUARE PIPE 15	1
	011000451	REAR SQUARE PIPE 15	1
	011000441	REAR SQUARE PIPE 14	1
	011000431	REAR SQUARE PIPE 14	1

ASSB_NAME	PART NO.	NAME	QTY
REAR FRAME	011000421	REAR SQUARE PIPE 12	1
	011000391	REAR SQUARE PIPE 09	1
	011000391	REAR SQUARE PIPE 09	1
	011000381	REAR SQUARE PIPE 08	1
	011000311	REAR SQUARE PIPE 01	1

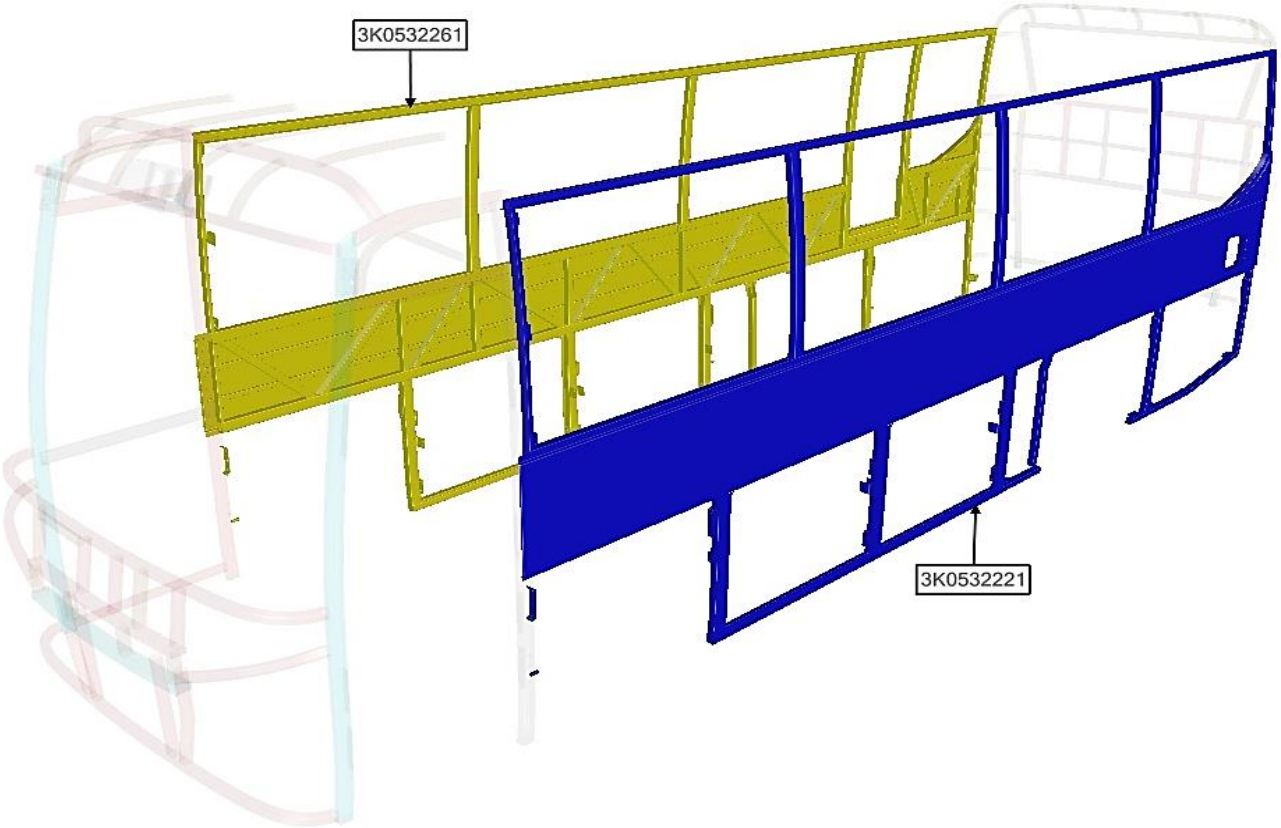

ASSB_NAME	PART NO.	NAME	QTY
SIDE FRAME ASSY	3K0532221	LH SIDE FRAME ASSY	1
	3K0532261	RH SIDE FRAME ASSY	1

ASSB_NAME	PART NO.	NAME	QTY
SIDE FRAME ASSY			

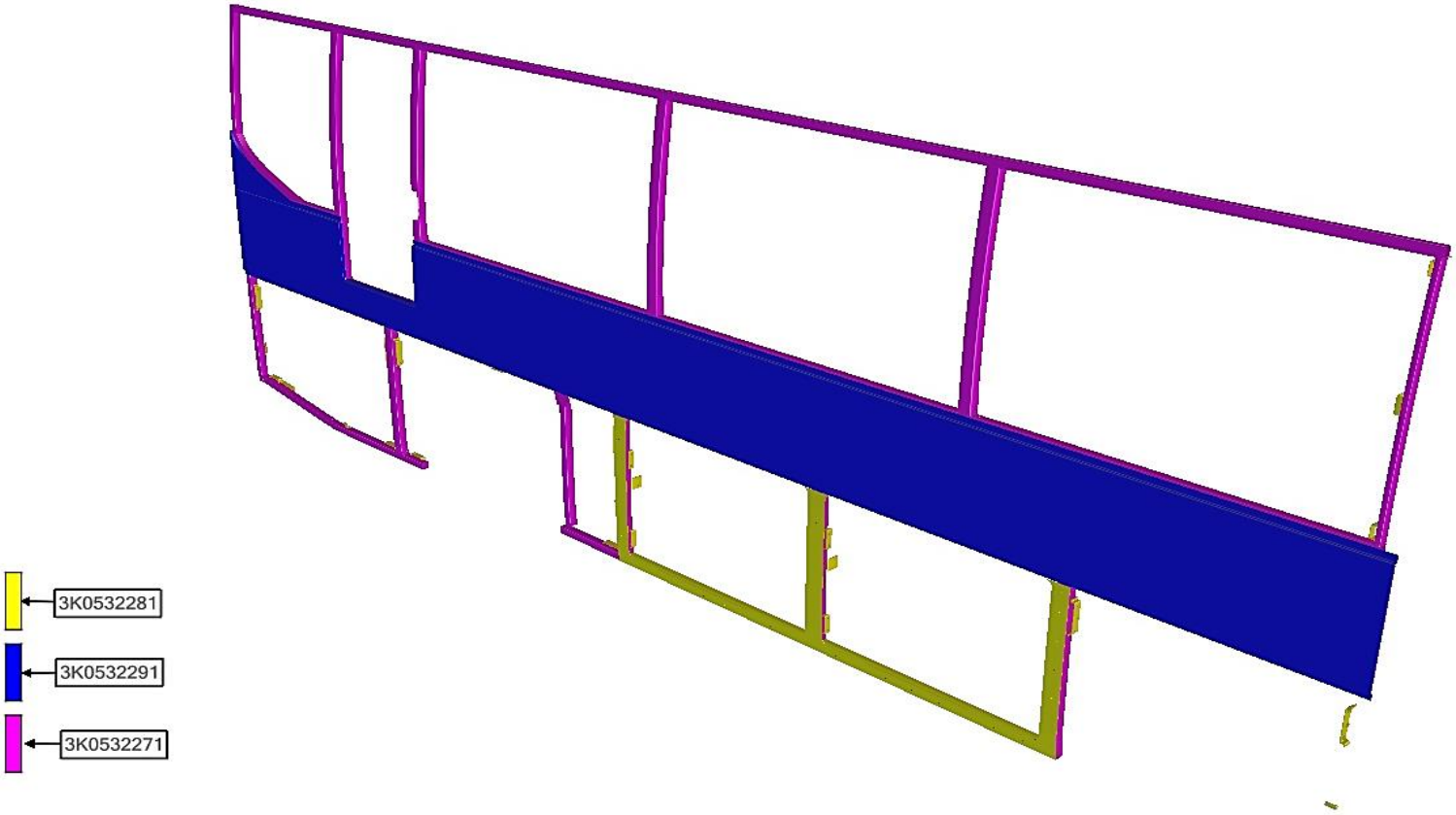

ASSB_NAME	PART NO.	NAME	QTY
RH SIDE FRAME ASSY	3K0532281	CONNECTIVE ITEM	1
	3K0532291	RH SIDE STEEL SHEET ASSY	1
	3K0532271	RH SIDE FRAME	1

ASSB_NAME	PART NO.	NAME	QTY
RH SIDE FRAME ASSY			

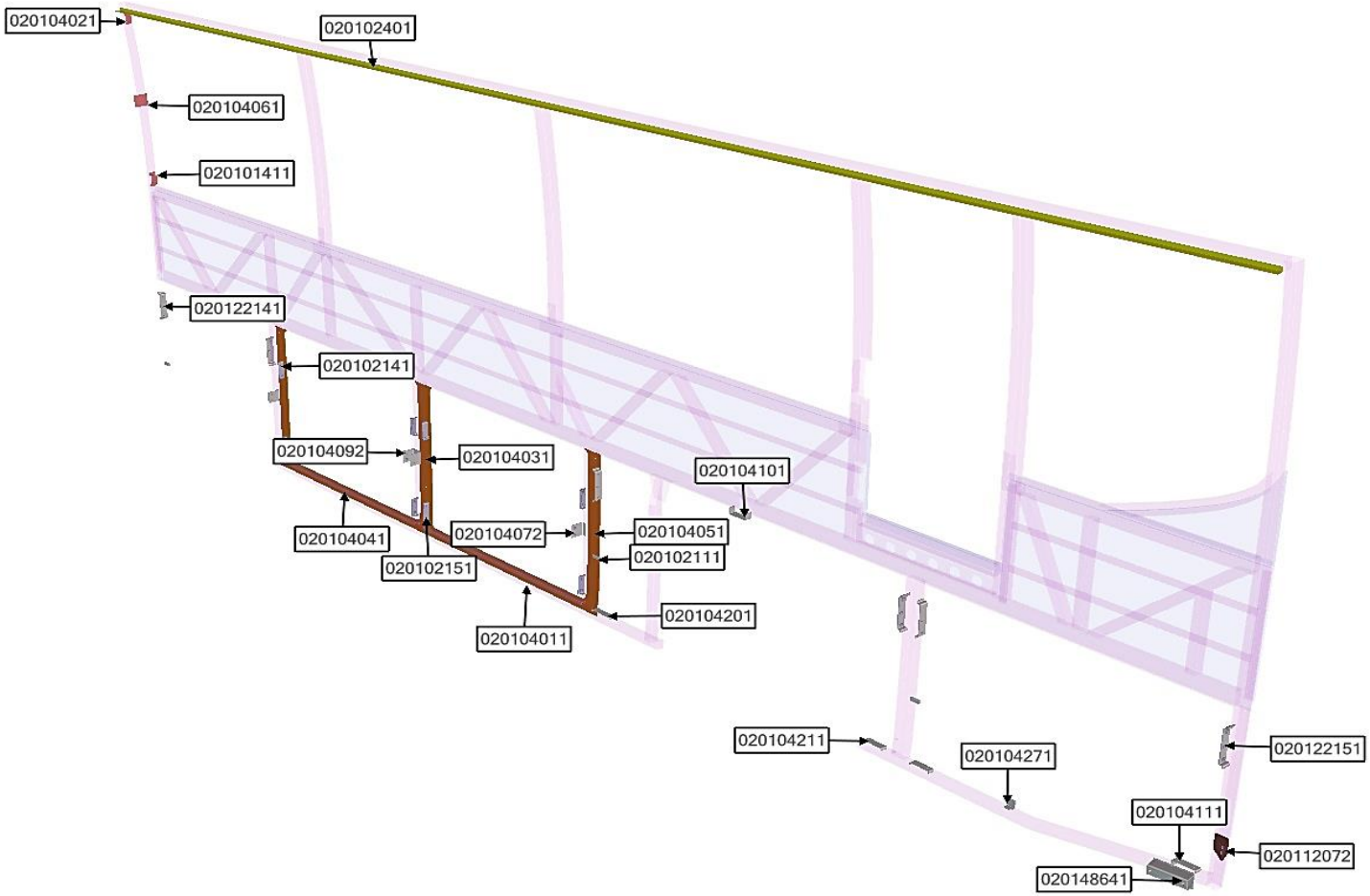

ASSB_NAME	PART NO.	NAME	QTY
CONNECTIVE ITEM	020102151	BRACKET	4
	020102141	STOPPER BRACKET	4
	020122141	LH FLAP HINGE BRACKET	3
	020102111	FLAP BRACKET	3
	020102401	CURTAINS BRACKET 01	3
	020122151	RH FLAP HINGE BRACKET	3
	020104101	STOPPER BRACKET	1

ASSB_NAME	PART NO.	NAME	QTY
CONNECTIVE ITEM	020104011	ALUMINUM MOULDING BRACKET	2
	020104041	FLAP WEATHERSTRIP MOULDING 02	2
	020104211	LOCK BRACKET 02	2
	020104072	TURNBUCKLE MOUNT BRACKET 01	2
	020148641	RADIATOR MOUNT BRACKET	1
	020104111	STOPPER BRACKET	1
	020104092	FLAP TURNBUCKLE MOUNT BRACKET 02	1

ASSB_NAME	PART NO.	NAME	QTY
CONNECTIVE ITEM	020104051	FLAP WEATHERSTRIP MOULDING 03	1
	020104031	FLAP WEATHERSTRIP MOULDING 01	1
	020112072	RADIATOR LINTEL BRACKET 02	1
	020104061	SIDE PILLAR COVER BRACKET	1
	020104021	PILLAR COVER BRACKET 03	1

ASSB_NAME	PART NO.	NAME	QTY
CONNECTIVE ITEM	020101411	PILLAR COVER BRACKET 02	1
	020104201	LOCK BRACKET 01	1
	020104271	LOCK BRACKET	1

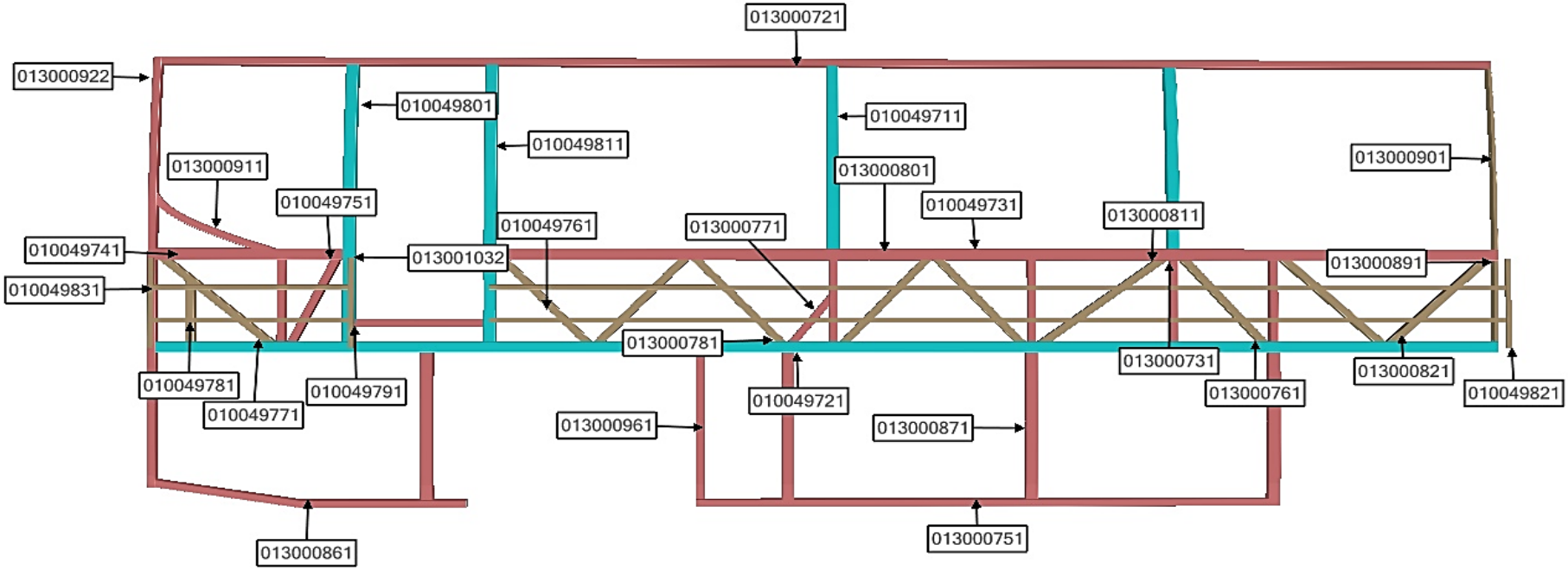

ASSB_NAME	PART NO.	NAME	QTY
RH SIDE FRAME	013000731	SIDE SQUARE PIPE 03	5
	013000871	SIDE SQUARE PIPE 17	4
	013001032	SUPPORTED SQUARE PIPE 01	3
	010049831	SUPPORTED SQUARE PIPE 07	2
	010049821	SUPPORTED SQUARE PIPE 06	2
	010049711	SIDE SQUARE PIPE 18	2
	013000861	SIDE SQUARE PIPE 16	1

ASSB_NAME	PART NO.	NAME	QTY
RH SIDE FRAME	013000821	SIDE SQUARE PIPE 12	2
	013000801	SIDE SQUARE PIPE 10	2
	013000781	SIDE SQUARE PIPE 08	2
	013000761	SIDE SQUARE PIPE 06	1
	013000751	SIDE SQUARE PIPE 05	1
	013000721	SIDE SQUARE PIPE 02	1
	013000891	SIDE SQUARE PIPE 19	1

ASSB_NAME	PART NO.	NAME	QTY
RH SIDE FRAME	010049761	SIDE SQUARE PIPE 29	1
	010049781	SIDE SQUARE PIPE 31	1
	010049771	SIDE SQUARE PIPE 30	1
	010049811	SIDE SQUARE PIPE 34	1
	010049721	SIDE SQUARE PIPE 25	1
	010049751	SIDE SQUARE PIPE 28	1
	010049741	SIDE SQUARE PIPE 27	1
	013000811	SIDE SQUARE PIPE 11	1
	013000771	SIDE SQUARE PIPE 07	1

ASSB_NAME	PART NO.	NAME	QTY
RH SIDE FRAME	010049731	SIDE SQUARE PIPE 26	1
	010049791	SIDE SQUARE PIPE 32	1
	010049801	SIDE SQUARE PIPE 33	1
	013000961	SIDE SQUARE PIPE 23	1
	013000911	SIDE SQUARE PIPE 21	1
	013000901	SIDE SQUARE PIPE 20	1
	013000922	SIDE SQUARE PIPE 22	1

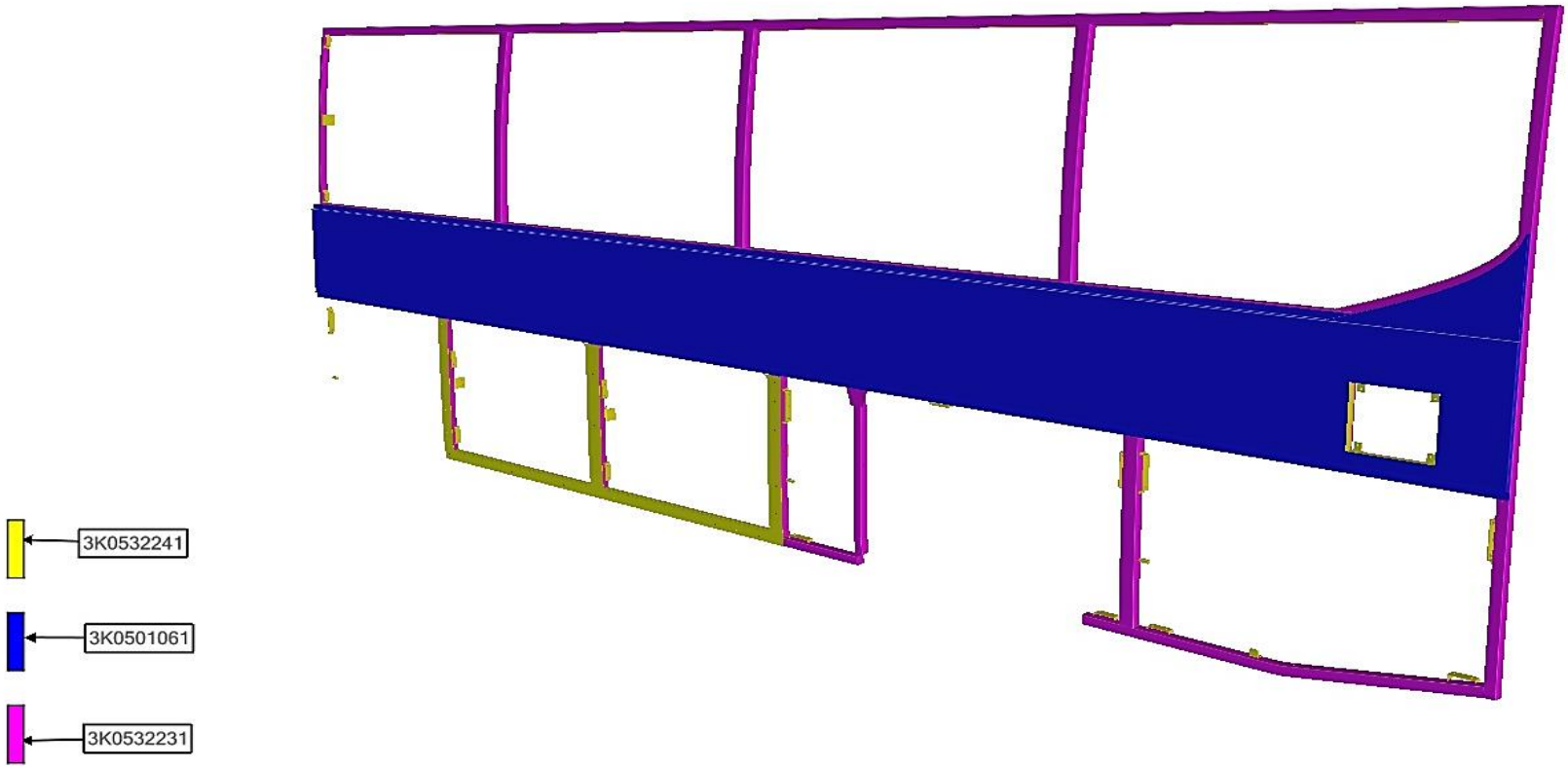

ASSB_NAME	PART NO.	NAME	QTY
LH SIDE FRAME ASSY	3K0532241	CONNECTING ITEM	1
	3K0532231	LH SIDE FRAME	1
	3K0501061	LH SIDE STEEL SHEET ASSY	1

ASSB_NAME	PART NO.	NAME	QTY
LH SIDE FRAME ASSY			

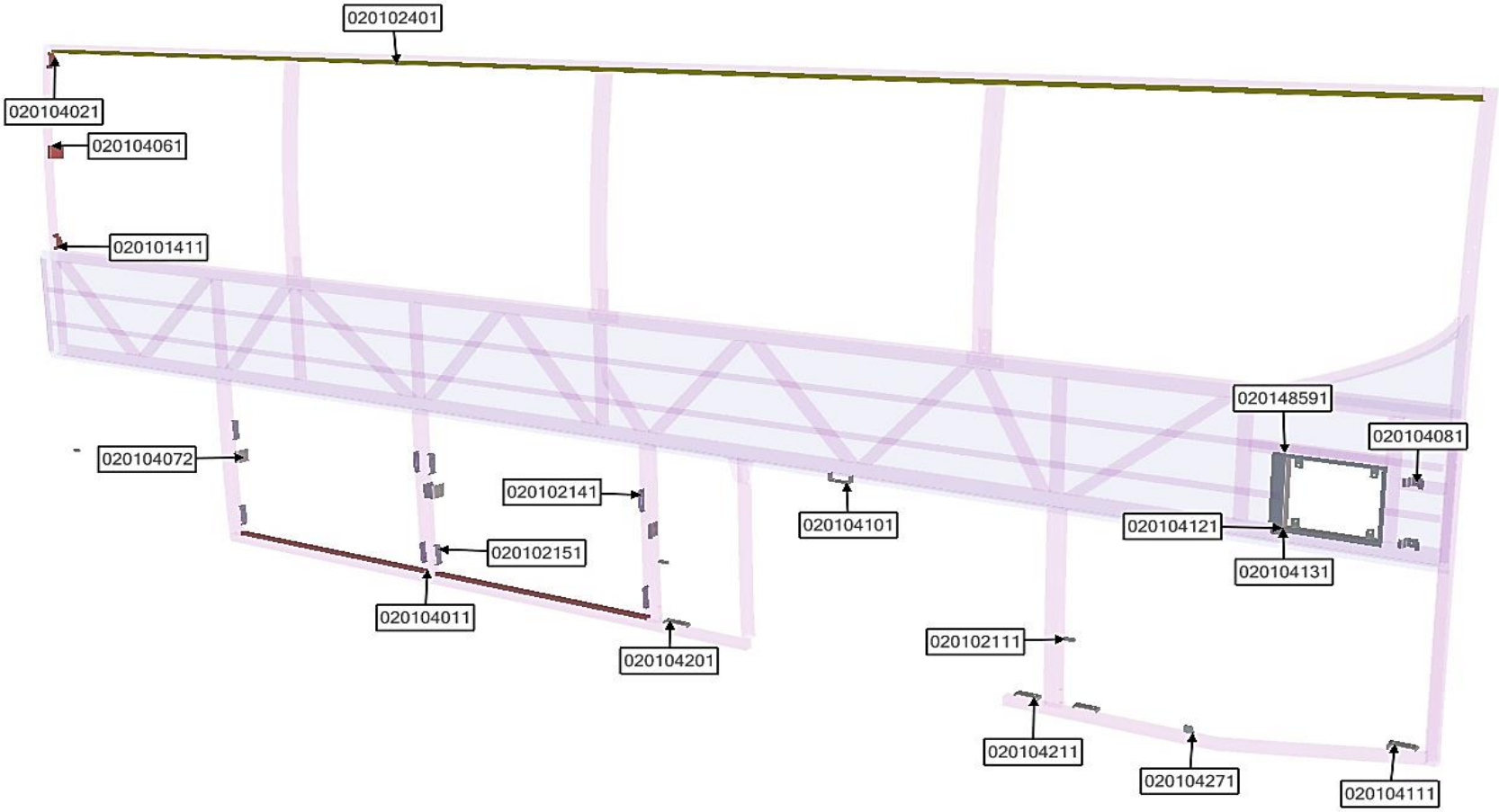

ASSB_NAME	PART NO.	NAME	QTY
CONNECTIVE ITEM	020104251	BRACKET	4
	020102151	BRACKET	4
	020104081	BRACKET	4
	020102141	STOPPER BRACKET	4
	020102111	FLAP BRACKET	3
	020102401	BRACKET	3
	020104111	STOPPER BRACKET	1

ASSB_NAME	PART NO.	NAME	QTY
CONNECTIVE ITEM	020104131	BRACKET	2
	020104121	BRACKET	2
	020104211	LOCK BRACKET 02	2
	020104072	BRACKET	2
	020104011	ALUMINUM MOULDING BRACKET	2
	020104101	STOPPER BRACKET	1
	020104201	LOCK BRACKET 01	1

ASSB_NAME	PART NO.	NAME	QTY
CONNECTIVE ITEM	020148591	BRACKET	1
	020104061	SIDE PILLAR COVER BRACKET	1
	020104021	PILLAR COVER BRACKET 03	1
	020104271	PILLAR COVER BRACKET 02	1
	020101411	PILLAR COVER BRACKET 02	1

ASSB_NAME	PART NO.	NAME	QTY
CONNECTIVE ITEM			

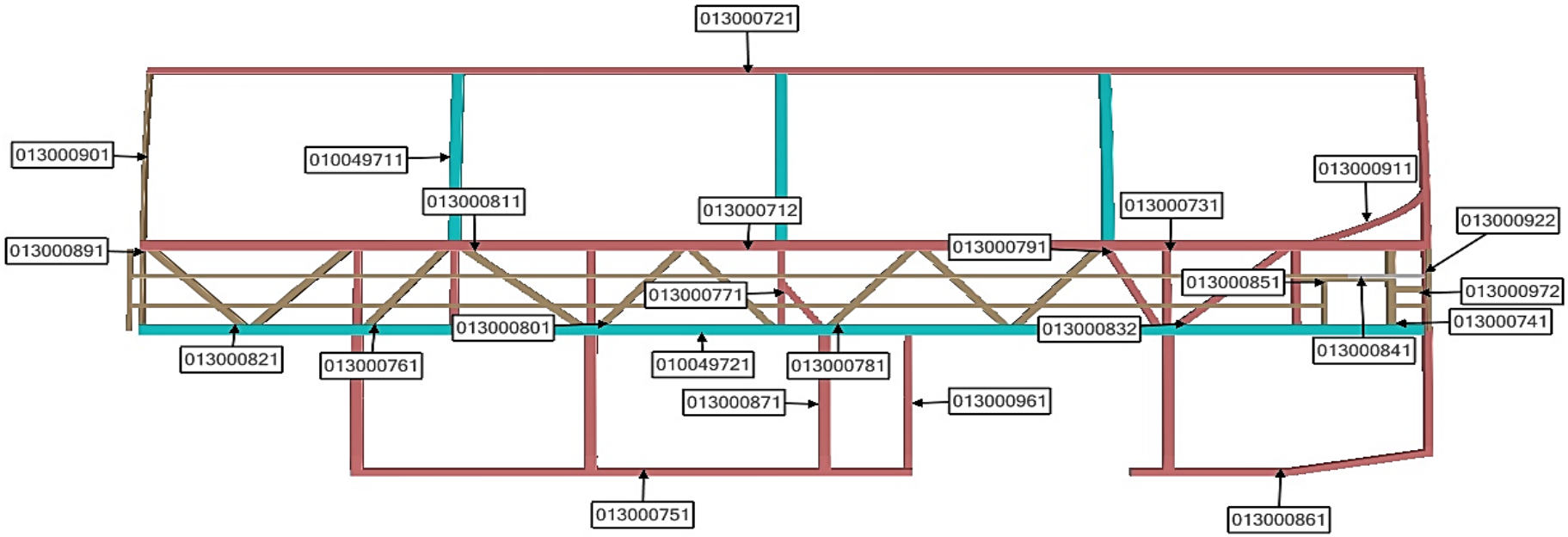

ASSB_NAME	PART NO.	NAME	QTY
LH SIDE FRAME	013000731	SIDE SQUARE PIPE 07	6
	013000871	SIDE SQUARE PIPE 17	4
	010049711	SIDE SQUARE PIPE 18	3
	013000781	SIDE SQUARE PIPE 08	3
	013000821	SIDE SQUARE PIPE 12	2
	013000801	SIDE SQUARE PIPE 10	2
	013001002	SUPPORTED SQUARE PIPE 03	1

ASSB_NAME	PART NO.	NAME	QTY
LH SIDE FRAME	013001032	SUPPORTED SQUARE PIPE 01	2
	010049721	SIDE SQUARE PIPE 25	1
	013000972	SIDE SQUARE PIPE 24	1
	013000911	SIDE SQUARE PIPE 21	1
	013000961	SIDE SQUARE PIPE 23	1
	013000901	SIDE SQUARE PIPE 20	1
	013000991	SUPPORTED SQUARE PIPE 02	1

ASSB_NAME	PART NO.	NAME	QTY
LH SIDE FRAME	013000891	SIDE SQUARE PIPE 19	1
	013000922	SIDE SQUARE PIPE 22	1
	013000851	SIDE SQUARE PIPE 15	1
	013000832	SIDE SQUARE PIPE 13	1
	013000841	SIDE SQUARE PIPE 14	1
	013000861	SIDE SQUARE PIPE 16	1
	013000811	SIDE SQUARE PIPE 11	1
	013000791	SIDE SQUARE PIPE 09	1
	013000771	SIDE SQUARE PIPE 07	1
	013000761	SIDE SQUARE PIPE 06	1
	013000751	SIDE SQUARE PIPE 05	1
	013000741	SIDE SQUARE PIPE 04	1
	013000712	SIDE SQUARE PIPE 01	1
	013000721	SIDE SQUARE PIPE 02	1
	013001021	SUPPORTED SQUARE PIPE 05	1
	013001011	SUPPORTED SQUARE PIPE 04	1

ASSB_NAME	PART NO.	NAME	QTY
LH SIDE FRAME			

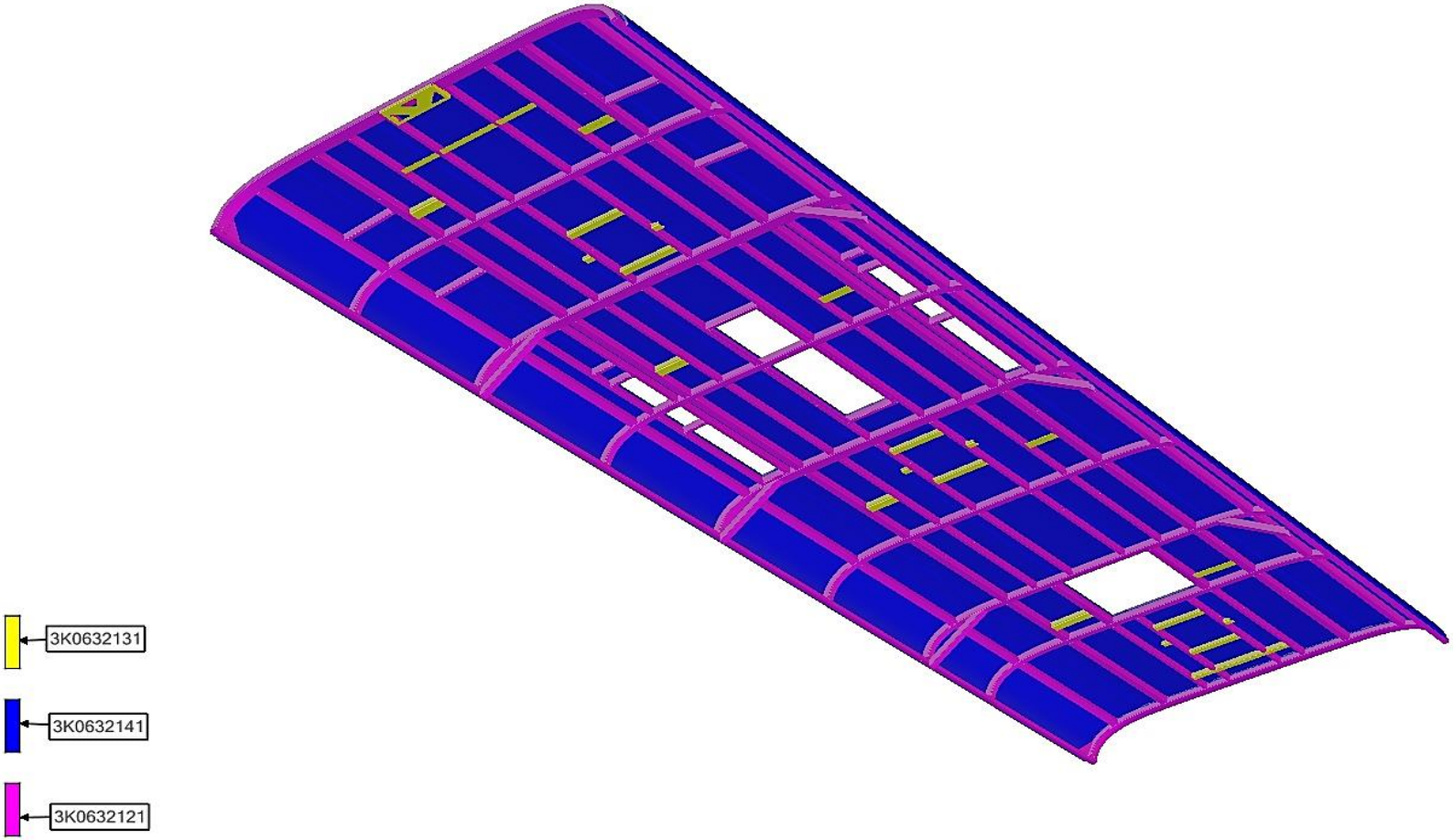

ASSB_NAME	PART NO.	NAME	QTY
ROOF FRAME ASSY	3K0632121	ROOF FRAME	1
	3K0632131	CONNECTIVE ITEM	1
	3K0632141	ROOF STEEL SHEET ASSY	1

ASSB_NAME	PART NO.	NAME	QTY
ROOF FRAME ASSY			

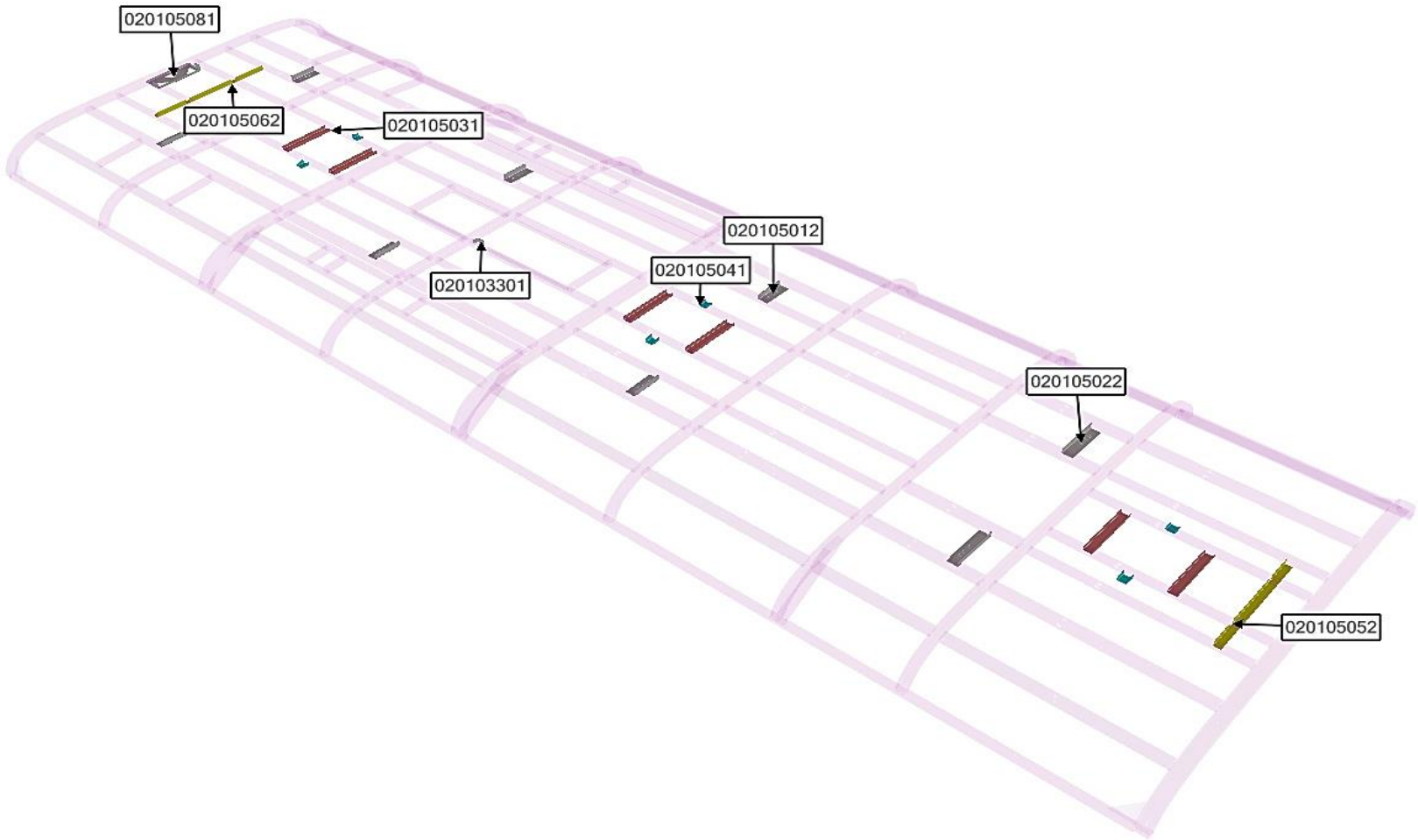

ASSB_NAME	PART NO.	NAME	QTY
CONNECTING ITEM	020105041	CEILINGLAMP BRACKET 02	6
	020105031	CEILINGLAMP BRACKET 01	6
	020105012	LUGGAGE RACK MOUNT BRACKET 01	6
	020105022	LUGGAGE RACK MOUNT BRACKET 01	2
	020105062	HEADLINING BRACKET 02	1
	020105052	HEADLINING BRACKET 01	1

ASSB_NAME	PART NO.	NAME	QTY
CONNECTING ITEM	020103301	MASS A/C BRACKET	1
	020105081	CLOCK BRACKET	1

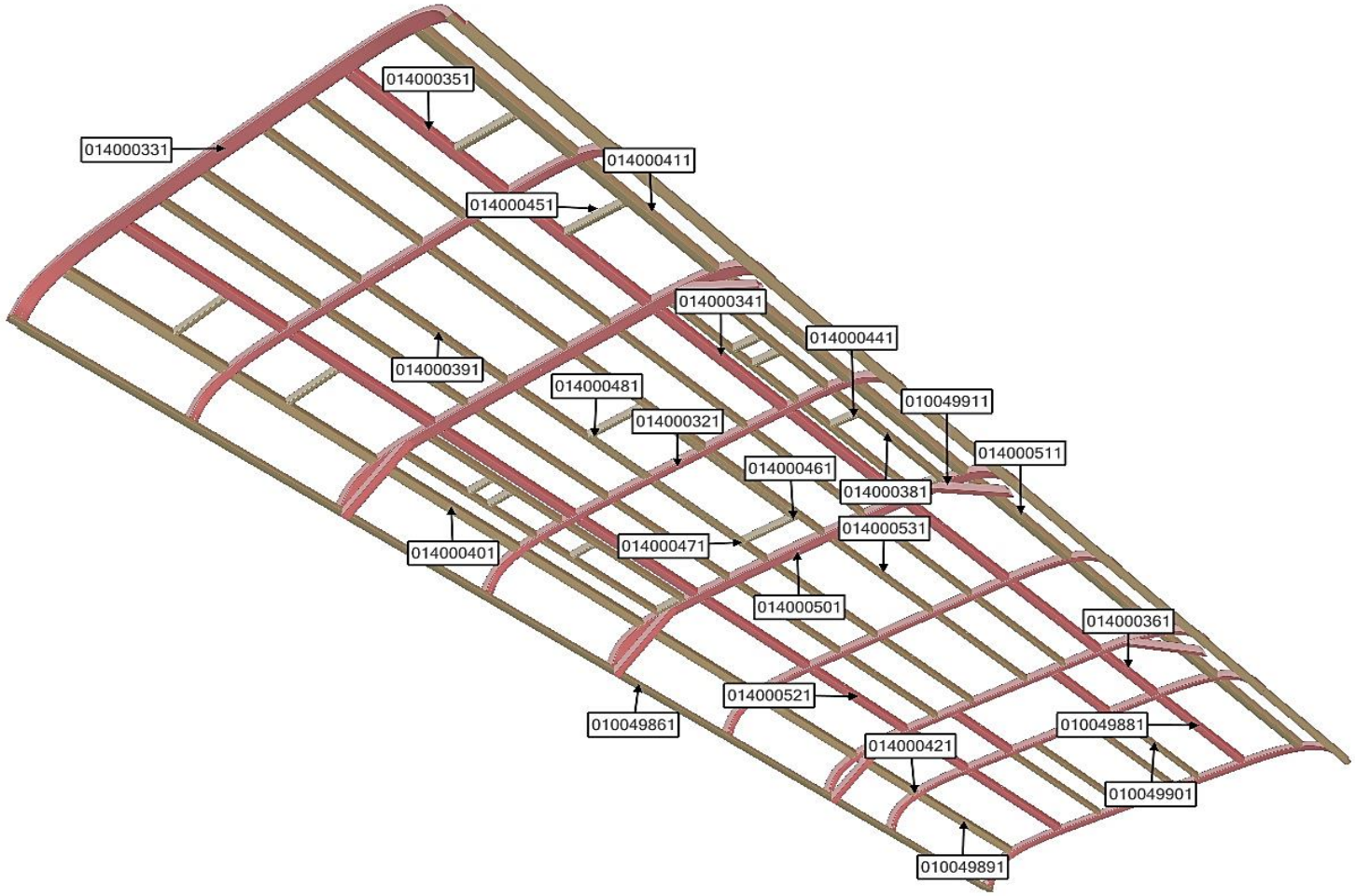

ASSB_NAME	PART NO.	NAME	QTY
ROOF FRAME	014000381	ROOF SQUARE PIPE 08	16
	014000531	ROOF SQUARE PIPE 23	8
	014000441	ROOF SQUARE PIPE 14	8
	014000391	ROOF SQUARE PIPE 09	8
	010049911	ROOF SQUARE PIPE 24	6
	014000321	ROOF SQUARE PIPE 02	5
	010049891	ROOF SQUARE PIPE 13	2

ASSB_NAME	PART NO.	NAME	QTY
ROOF FRAME	014000361	ROOF SQUARE PIPE 06	4
	014000351	ROOF SQUARE PIPE 05	4
	014000341	ROOF SQUARE PIPE 04	4
	014000521	ROOF SQUARE PIPE 22	4
	014000511	ROOF SQUARE PIPE 21	4
	010049901	ROOF SQUARE PIPE 19	4
	014000421	ROOF SQUARE PIPE 12	2

ASSB_NAME	PART NO.	NAME	QTY
ROOF FRAME	014000451	ROOF SQUARE PIPE 15	4
	014000411	ROOF SQUARE PIPE 11	4
	014000401	ROOF SQUARE PIPE 10	4
	010049881	ROOF SQUARE PIPE 07	2
	014000331	ROOF SQUARE PIPE 03	2
	010049861	ROOF SQUARE PIPE 01	2
	014000501	ROOF SQUARE PIPE 20	2
	014000481	ROOF SQUARE PIPE 18	2
	014000471	ROOF SQUARE PIPE 07	2
	014000461	ROOF SQUARE PIPE 16	2

ASSB_NAME	PART NO.	NAME	QTY
ROOF FRAME			

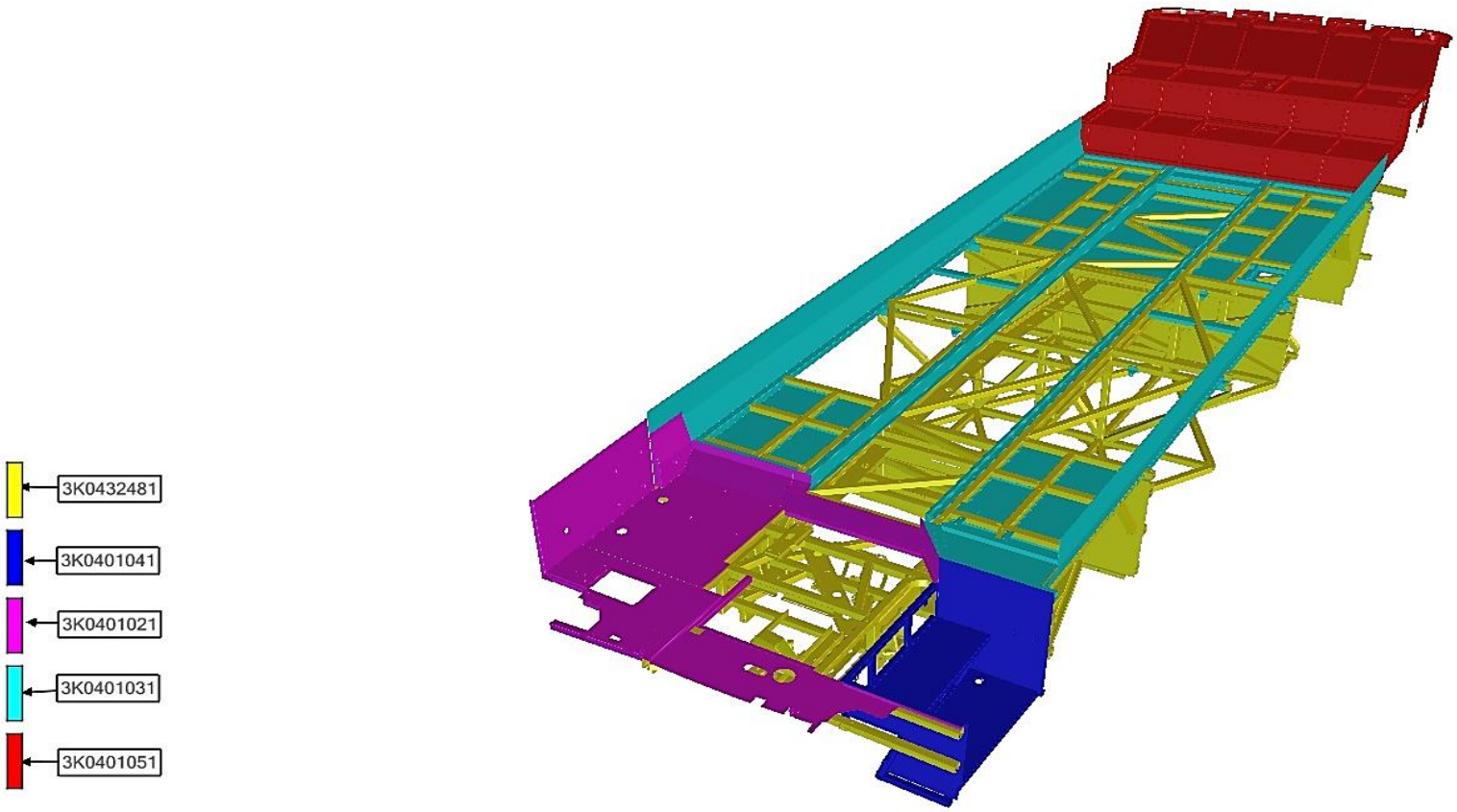

ASSB_NAME	PART NO.	NAME	QTY
FLOOR FRAME ASSY	3K0401051	ENGINE FLOOR FRAME ASSY	1
	3K0401031	MAIN FLOOR FRAME ASSY	1
	3K0401021	CABIN FLOOR FRAME ASSY	1
	3K0401041	STAIRS FRAME ASSY	1
	3K0432481	CHASSIS FRAME	1

ASSB_NAME	PART NO.	NAME	QTY

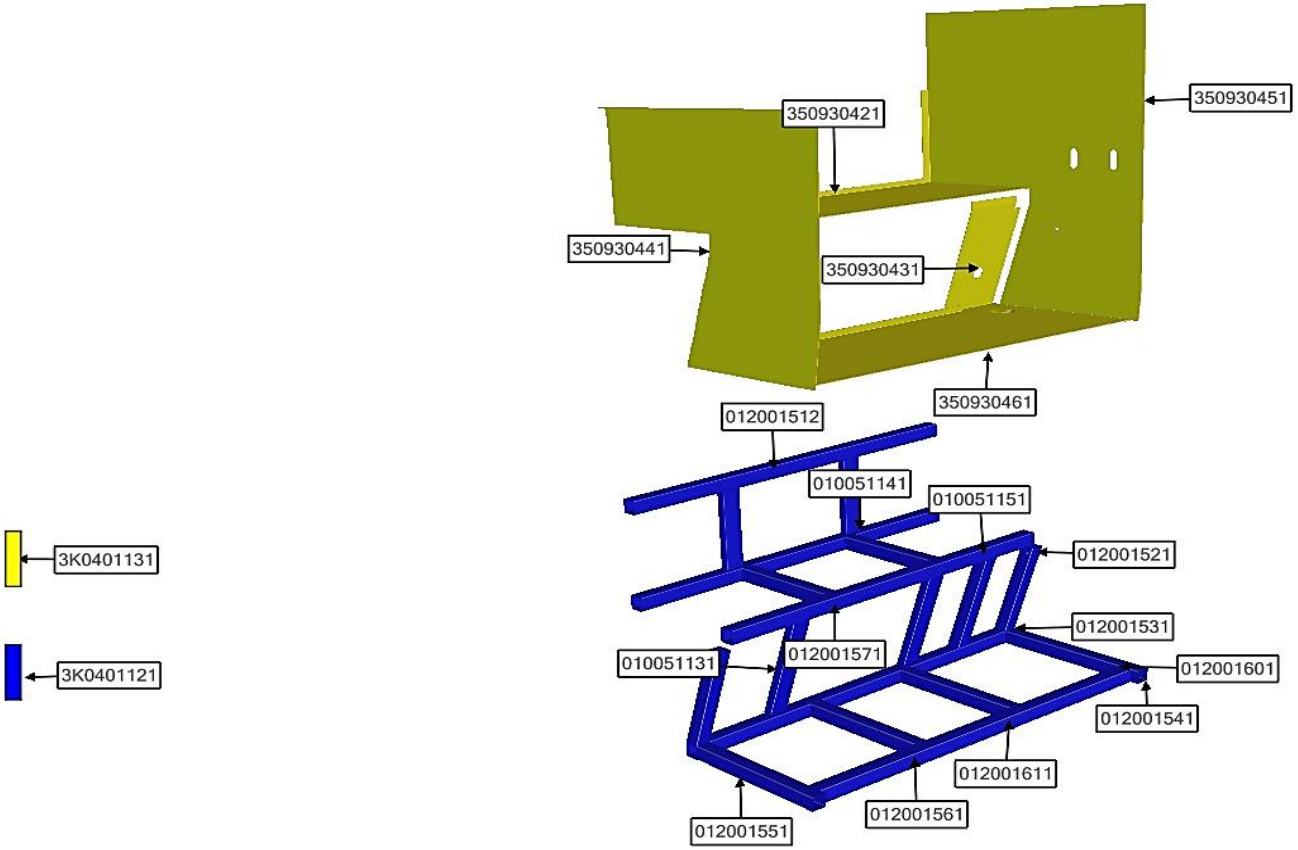

ASSB_NAME	PART NO.	NAME	QTY
STAIRS FRAME ASSY	012001512	STAIRS SQUARE PIPE 01	3
	010051141	STAIRS SQUARE PIPE 09	2
	010051131	STAIRS SQUARE PIPE 08	2
	012001571	STAIRS SQUARE PIPE 07	2
	012001521	STAIRS SQUARE PIPE 02	2
	350930451	STAIRS STEEL SHEET 05	1
	350930441	STAIRS STEEL SHEET 04	1

ASSB_NAME	PART NO.	NAME	QTY
STAIRS FRAME ASSY	350930431	STAIRS STEEL SHEET 03	1
	350930421	STAIRS STEEL SHEET 02	1
	3K0401121	STAIRS FRAME	1
	3K0401131	STAIRS STEEL SHEET ASSY	1
	012001611	STAIRS SQUARE PIPE 11	1
	012001601	STAIRS SQUARE PIPE 10	1
	350930461	STAIRS STEEL SHEET 01	1

ASSB_NAME	PART NO.	NAME	QTY
STAIRS FRAME ASSY	010051151	STAIRS SQUARE PIPE 12	1
	012001561	STAIRS SQUARE PIPE 06	1
	012001551	STAIRS SQUARE PIPE 05	1
	012001541	STAIRS SQUARE PIPE 04	1
	012001531	STAIRS SQUARE PIPE 03	1

ASSB_NAME	PART NO.	NAME	QTY
STAIRS FRAME ASSY			

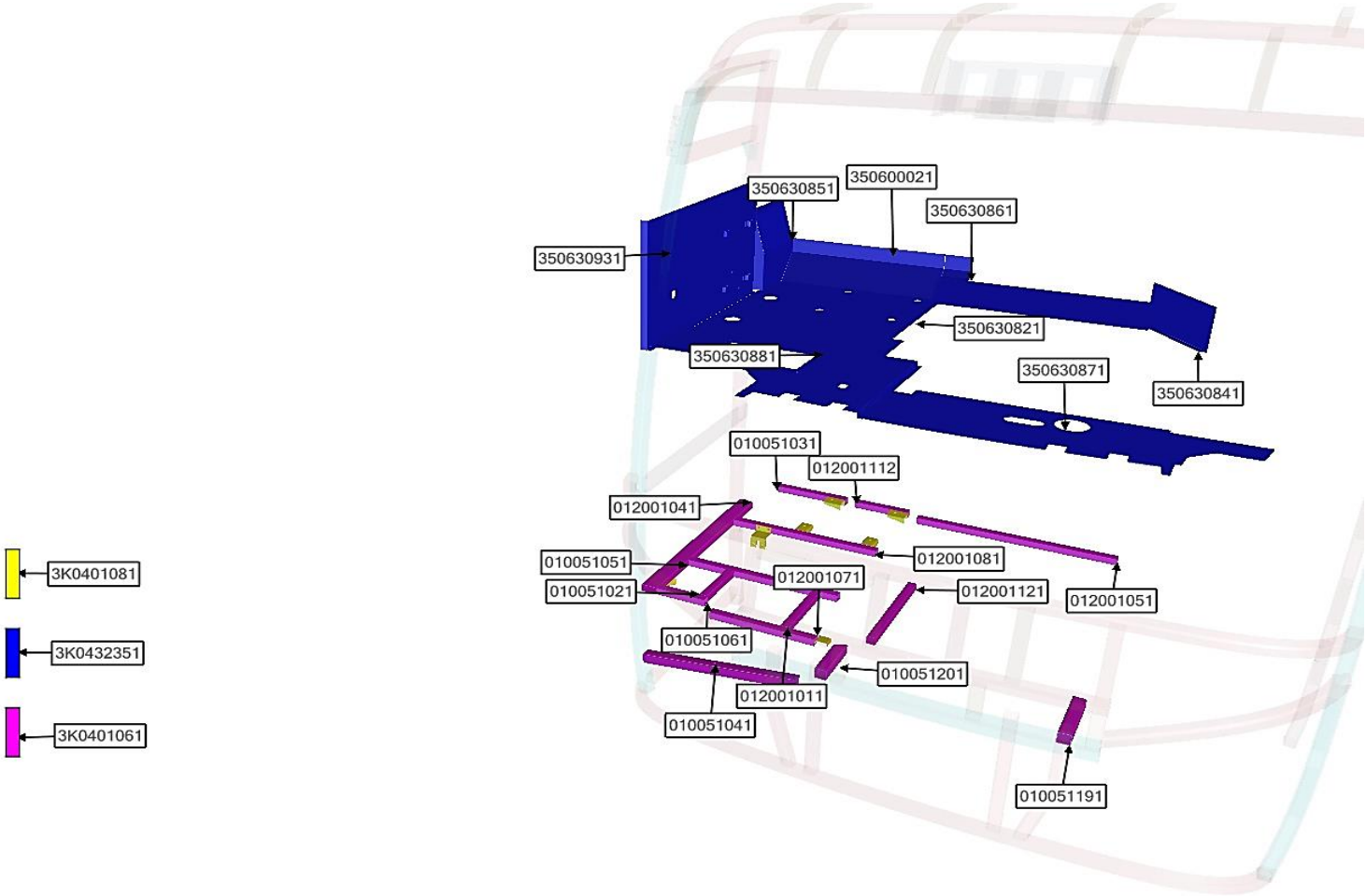

ASSB_NAME	PART NO.	NAME	QTY
CABIN FLOOR FRAME ASSY	350630861	CABIN FLOOR STEEL SHEET 05	1
	350630871	COVER STEEL SHEET BELOW DASHBO	1
	350630851	CABIN FLOOR STEEL SHEET 04	1
	350630841	CABIN FLOOR STEEL SHEET 03	1
	350630821	CABIN FLOOR STEEL SHEET 01	1
	3K0432351	CABIN FLOOR STEEL SHEET ASSY	1
	3K0401081	CONNECTING ITEM	1

ASSB_NAME	PART NO.	NAME	QTY
CABIN FLOOR FRAME ASSY	012001112	CABIN FLOOR SQUARE PIPE 11	1
	010051031	CABIN FLOOR SQUARE PIPE 03	1
	010051061	CABIN FLOOR SQUARE PIPE 10	1
	010051021	CABIN FLOOR SQUARE PIPE 02	1
	010051201	CABIN FLOOR SQUARE PIPE 14	1
	010051191	CABIN FLOOR SQUARE PIPE 13	1
	350600021	CABIN FLOOR STEEL SHEET 02	1

ASSB_NAME	PART NO.	NAME	QTY
CABIN FLOOR FRAME ASSY	010051041	CABIN FLOOR SQUARE PIPE 06	1
	012001121	CABIN FLOOR SQUARE PIPE 12	1
	012001081	CABIN FLOOR SQUARE PIPE 08	1
	012001041	CABIN FLOOR SQUARE PIPE 04	1
	012001051	CABIN FLOOR SQUARE PIPE 05	1
	012001071	CABIN FLOOR SQUARE PIPE 07	1
	012001011	CABIN FLOOR SQUARE PIPE 01	1
	010051051	CABIN FLOOR SQUARE PIPE 09	1
	350630931	COVER STEEL SHEET BELOW DRIVER D	1
	350630881	STEEL SHEET	1
	3K0401061	CABIN FLOOR FRAME	1

ASSB_NAME	PART NO.	NAME	QTY
CABIN FLOOR FRAME ASSY			

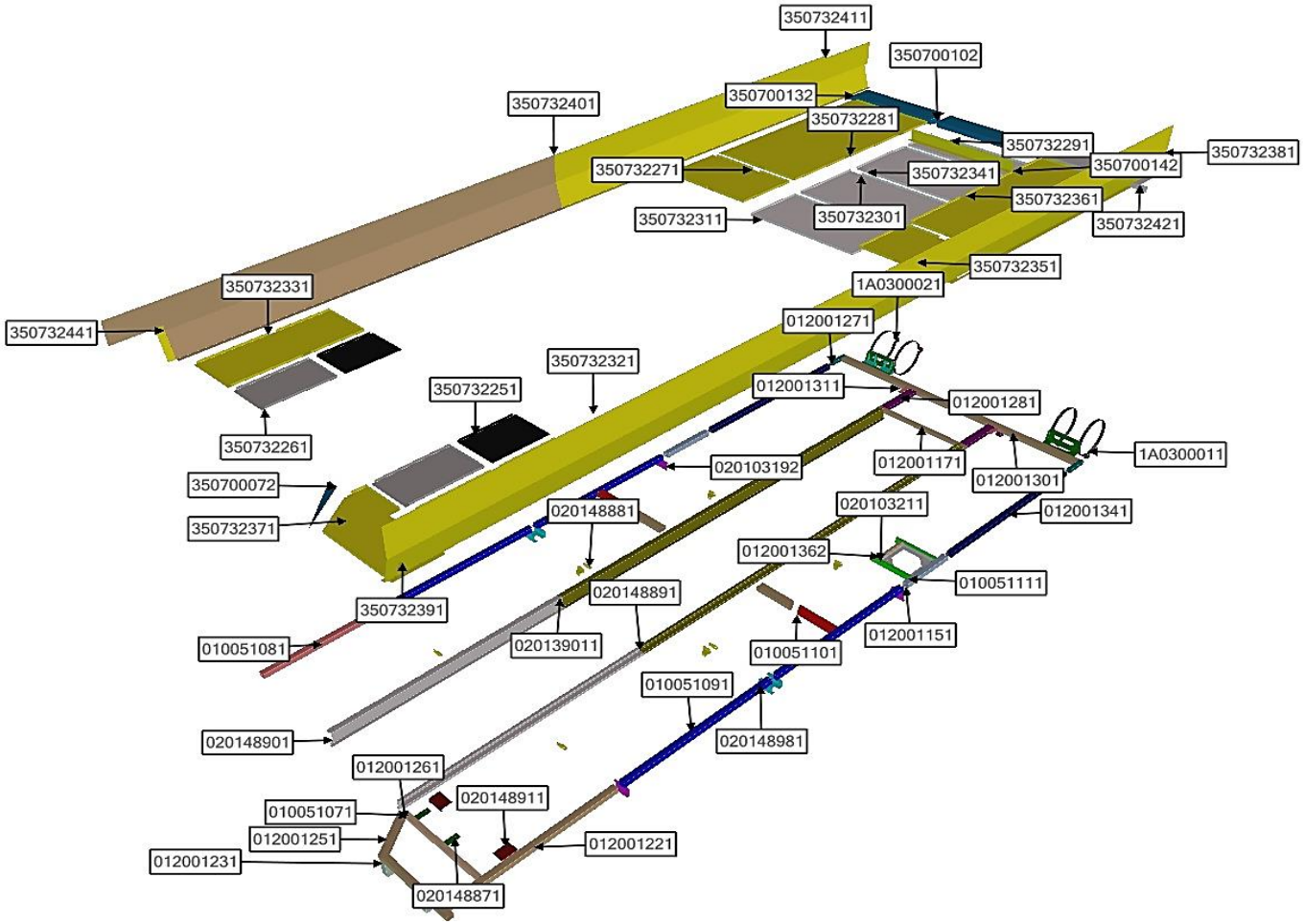

ASSB_NAME	PART NO.	NAME	QTY
MAIN FLOOR FRAME ASSY	020148881	SLIDE FLAP LIFTER ASSY BRACKET	8
	020148981	LEVER ARM BRACKET 02	4
	020103192	LEVER ARM BRACKET 01	4
	010051091	MAIN FLOOR SQUARE PIPE 05	4
	020148911	BRACKET	2
	012001341	MAIN FLOOR SQUARE PIPE 20	2
	020148891	MAIN FLOOR SQUARE PIPE 17	1

ASSB_NAME	PART NO.	NAME	QTY
MAIN FLOOR FRAME ASSY	012001311	MAIN FLOOR SQUARE PIPE 14	2
	012001281	MAIN FLOOR SQUARE PIPE 13	2
	012001271	MAIN FLOOR SQUARE PIPE 09	2
	012001231	MAIN FLOOR SQUARE PIPE 07	2
	010051111	MAIN FLOOR SQUARE PIPE 06	2
	010051101	MAIN FLOOR SQUARE PIPE 01	2
	020148901	MAIN FLOOR STEEL SHEET 02	1

ASSB_NAME	PART NO.	NAME	QTY
MAIN FLOOR FRAME ASSY	012001151	MAIN FLOOR STEEL SHEET 01	2
	350732261	SEAT TRACK 01	2
	350732251	SUBSEAT BRACKET	2
	020139011	OIL TANK CAP FRAME	2
	020148871	MAIN FLOOR SQUARE PIPE 15	2
	020103211	MAIN FLOOR SQUARE PIPE 16	1
	012001362	MAIN FLOOR SQUARE PIPE 12	1
	012001301	MAIN FLOOR SQUARE PIPE 11	1
	012001261	BELT TANK	1
	012001251	MAIN FLOOR SQUARE PIPE 08	1
	1A0300021	MAIN FLOOR SQUARE PIPE 04	1
	012001221	MAIN FLOOR SQUARE PIPE 03	1
	010051081	MAIN FLOOR SQUARE PIPE 02	1
	012001171	BELT TANK	1
	010051071	MAIN FLOOR STEEL SHEET 15	1
	1A0300011	MAIN FLOOR STEEL SHEET 07	1
	350732341	MAIN FLOOR STEEL SHEET 06	1
	350732311	MAIN FLOOR STEEL SHEET 05	1
	350732301	MAIN FLOOR STEEL SHEET 09	1
	350732291	MAIN FLOOR STEEL SHEET 12	1
	350732321	MAIN FLOOR STEEL SHEET 03	1
	350732331	MAIN FLOOR STEEL SHEET 16	1
	350732271	MAIN FLOOR STEEL SHEET 17	1
	350732351	MAIN FLOOR STEEL SHEET 04	1
	350732361	MAIN FLOOR STEEL SHEET 08	1
	350732281	MAIN FLOOR STEEL SHEET 10	1
	350700072	MAIN FLOOR STEEL SHEET 14	1
	350700102	MAIN FLOOR STEEL SHEET 13	1
	350700142	MAIN FLOOR STEEL SHEET 11	1
	350700132	MAIN FLOOR STEEL SHEET 18	1
	350732421	CONNECTIVE SIDE AND FLOOR STEEL S	1
	350732371	CONNECTIVE SIDE AND FLOOR STEEL S	1
	350732411	CONNECTIVE SIDE AND FLOOR STEEL S	1
	350732441	CONNECTIVE SIDE AND FLOOR STEEL S	1
	350732381	CONNECTIVE SIDE AND FLOOR STEEL S	1

ASSB_NAME	PART NO.	NAME	QTY
MAIN FLOOR FRAME ASSY	350732401	SEAT TRACK 03	1
	350732391	SEAT TRACK 03	1

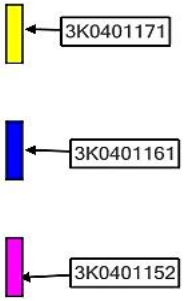

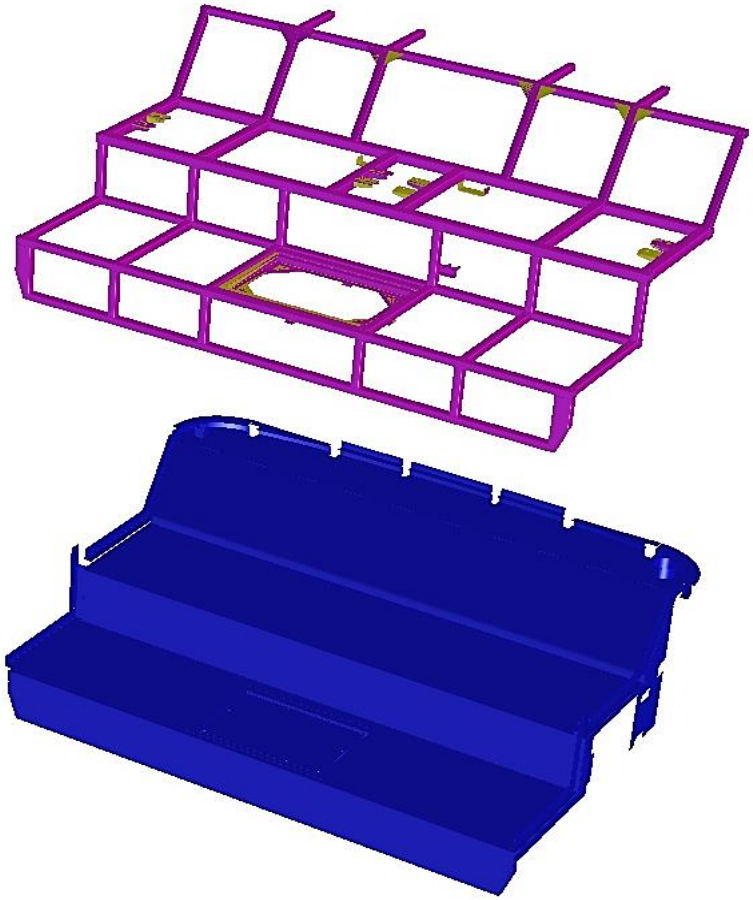

ASSB_NAME	PART NO.	NAME	QTY
ENGINE FLOOR FRAME ASSY	3K0401171	CONNECTIVE ITEM	1
	3K0401161	ENGINE FLOOR STEEL SHEET	1
	3K0401152	ENGINE FLOOR FRAME	1

ASSB_NAME	PART NO.	NAME	QTY
ENGINE FLOOR FRAME ASSY			

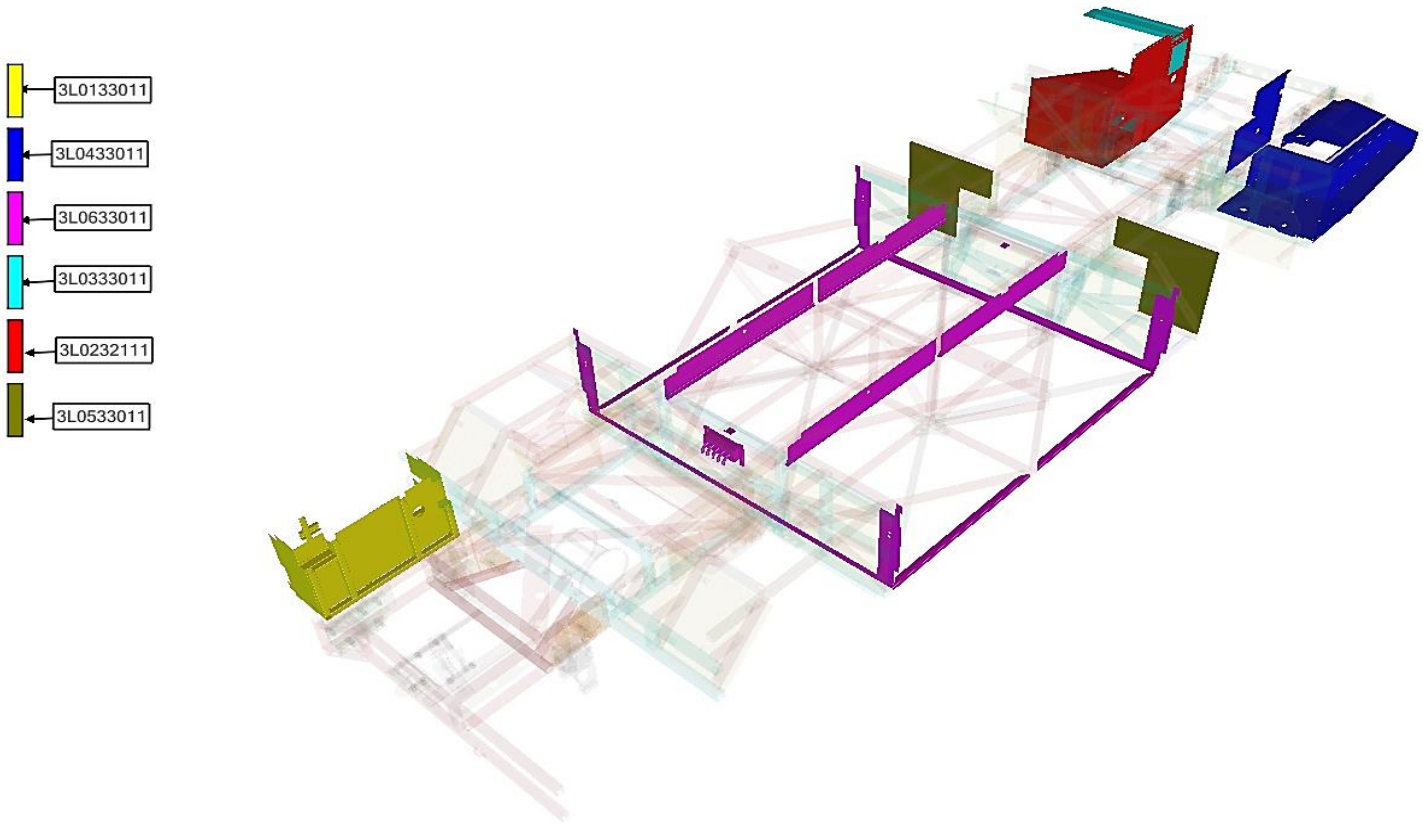

ASSB_NAME	PART NO.	NAME	QTY
COMPLETED STEEL SHEET	3L0533011	OIL TANK STEEL SHEET ASSY	1
	3L0232111	ELECTRICAL CABINET STEEL SHEET AS	1
	3L0333011	RADIATOR STEEL SHEET ASSY	1
	3L0633011	LUGGAGE COMPARTMENTS TOLE ASSY	1
	3L0433011	SCR TANK COVER ASSY	1
	3L0133011	BATTERY COVER ASSY	1

ASSB_NAME	PART NO.	NAME	QTY
COMPLETED STEEL SHEET			

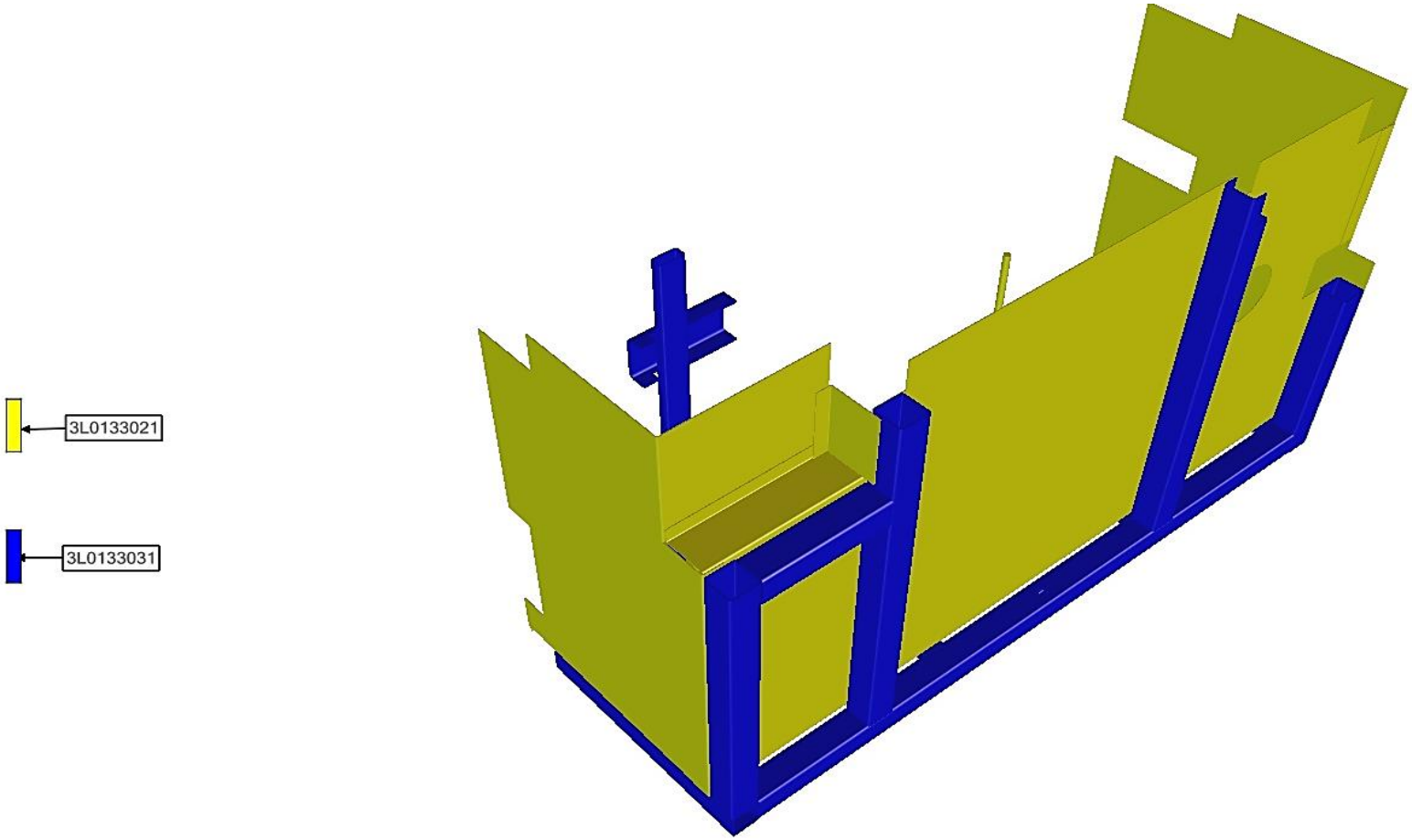

ASSB_NAME	PART NO.	NAME	QTY
BATTERY COVER ASSY	3L0133031	BATTERY STEEL SHEET	1
	3L0133021	BATTERY FRAME	1

ASSB_NAME	PART NO.	NAME	QTY
BATTERY COVER ASSY			

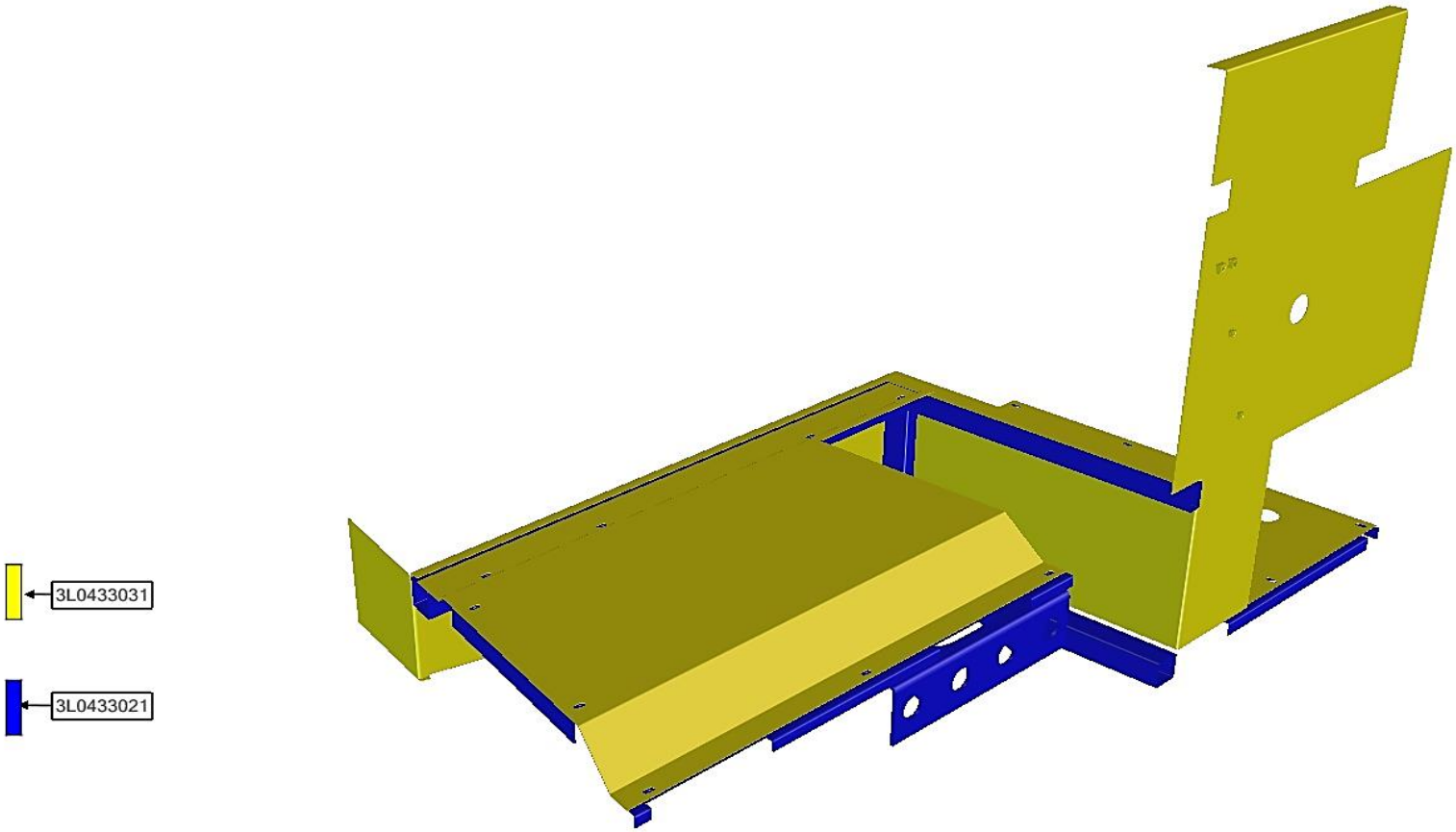

ASSB_NAME	PART NO.	NAME	QTY
SCR TANK COVER ASSY	3L0433031	SCR TANK STEEL SHEET	1
	3L0433021	SCR TANK FRAME	1

ASSB_NAME	PART NO.	NAME	QTY
SCR TANK COVER ASSY			

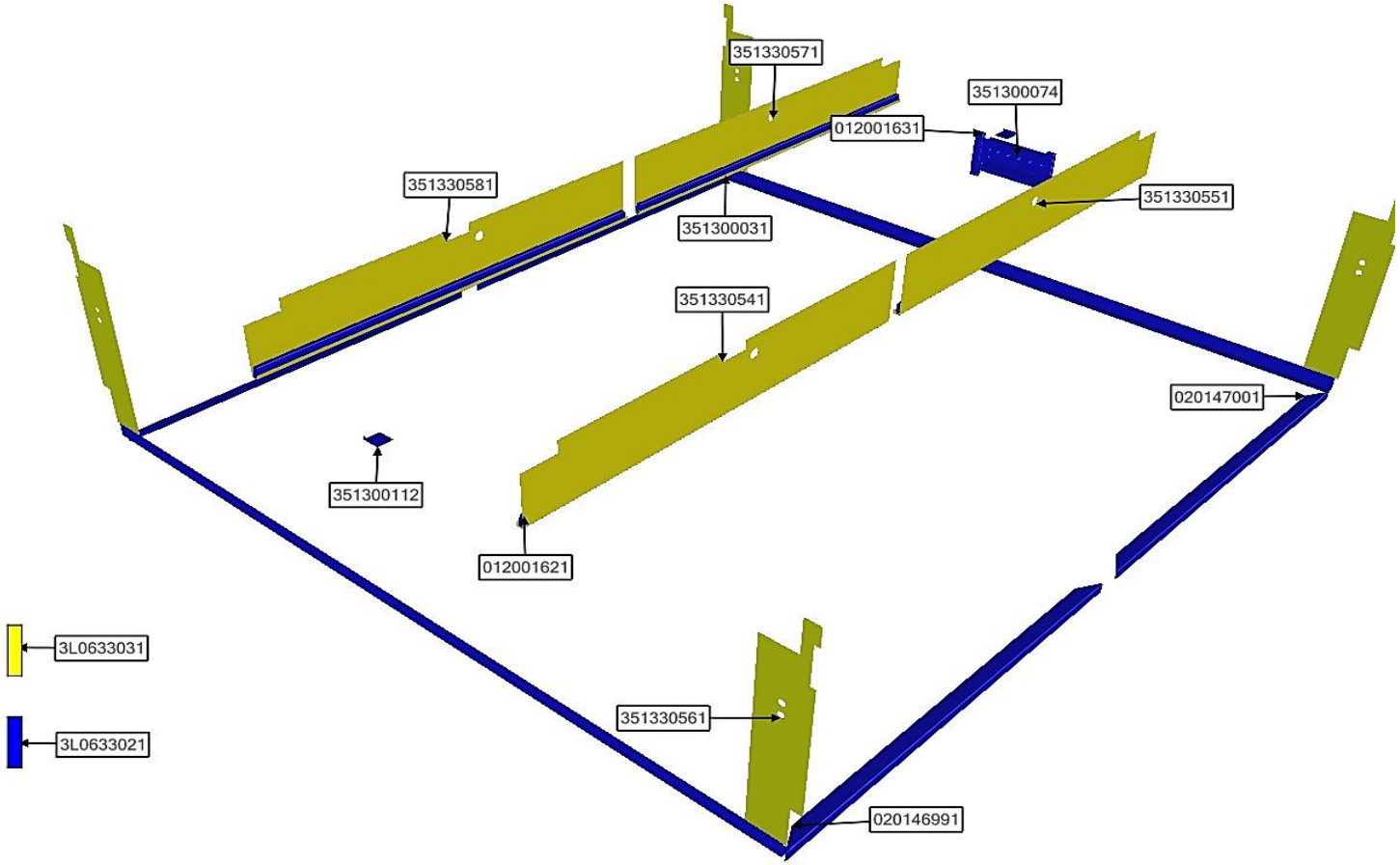

ASSB_NAME	PART NO.	NAME	QTY
LUGGAGE COMPARTMENTS TOLE ASSY	351330561	LUGGAGE COMPARTMENTS TOLE 03	4
	012001621	LUGGAGE COMPARTMENTS SQUARE PIPE 01	4
	020146991	INOX FLOOR MOUNT 01	2
	012001631	LUGGAGE COMPARTMENTS SQUARE PIPE 02	2
	351300112	TAPPY BRACKET	2
	351300031	INOX FLOOR SHELF 03	2
	020147001	INOX FLOOR SHELF 02	2

ASSB_NAME	PART NO.	NAME	QTY
LUGGAGE COMPARTMENTS TOLE ASSY	351330581	LUGGAGE COMPARTMENTS TOLE 05	1
	351330571	LUGGAGE COMPARTMENTS TOLE 04	1
	351300074	GRID PLATE	1
	3L0633021	LUGGAGE COMPARTMENT FRAME	1
	3L0633031	LUGGAGE COMPARTMENTS TOLE	1
	351330541	LUGGAGE COMPARTMENTS TOLE 01	1
	351330551	LUGGAGE COMPARTMENTS TOLE 02	1

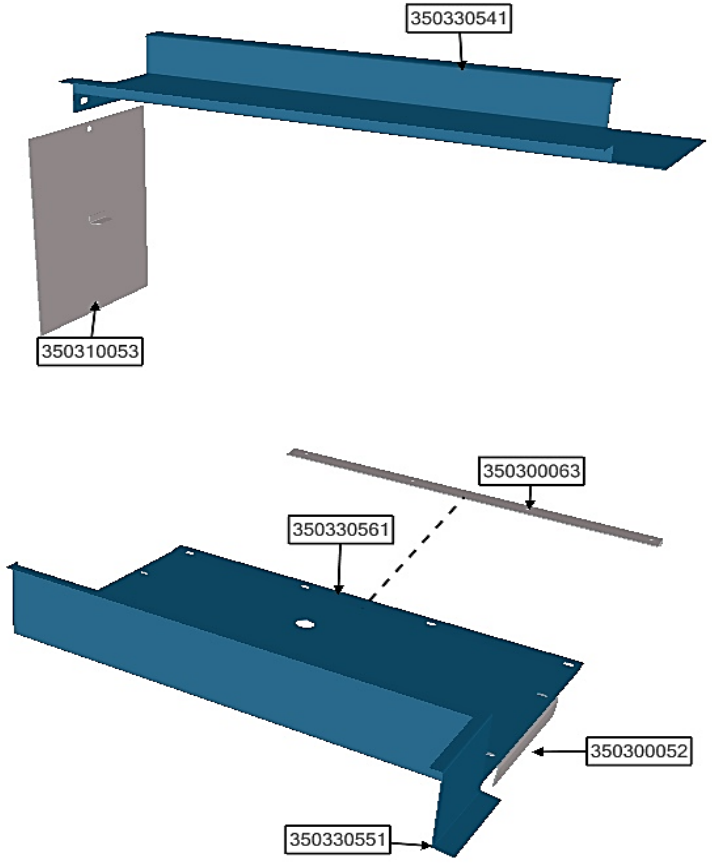

ASSB_NAME	PART NO.	NAME	QTY
RADIATOR STEEL SHEET ASSY	350310053	RADIATOR CAP STEEL SHEET	1
	350300063	RADIATOR STEEL SHEETS 02	1
	350300052	RADIATORS STEEL SHEETS 02	1
	350330551	RADIATOR STEEL SHEET 02	1
	350330541	RADIATOR STEEL SHEET 01	1
	350330561	RADIATOR STEEL SHEET 03	1

ASSB_NAME	PART NO.	NAME	QTY
RADIATOR STEEL SHEET ASSY			

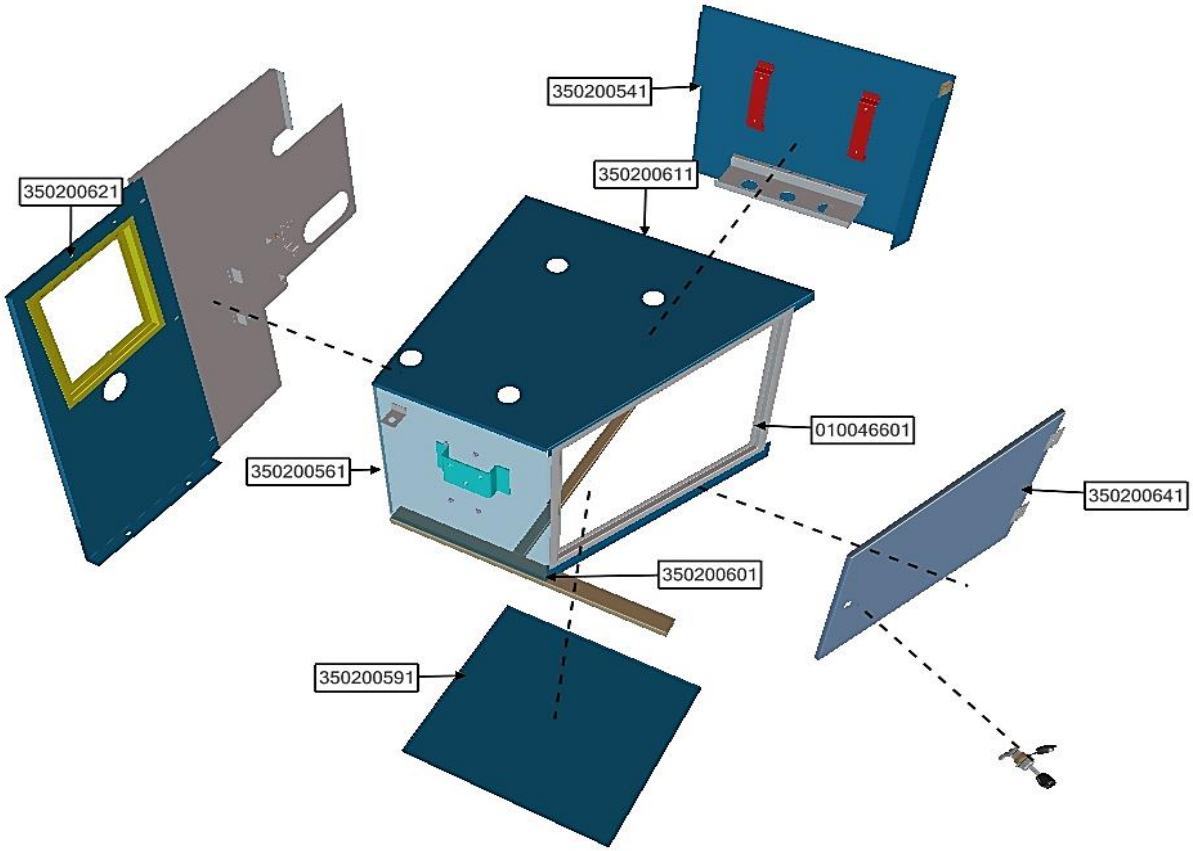

ASSB_NAME	PART NO.	NAME	QTY
ELECTRICAL CABINET STEEL SHEET ASSY	350200541	ELECTRICAL CABINET STEEL SHEET ASSY 01	1
	350200641	ELECTRICAL CABINET CAP ASSY	1
	350200561	ELECTRICAL CABINET STEEL SHEET ASSY 02	1
	010046601	CAP FRAME ASSY	1
	350200621	ELECTRICAL CABINET STEEL SHEET ASSY 05	1
	350200611	ELECTRICAL CABINET STEEL SHEET 04	1
	350200591	ELECTRICAL CABINET STEEL SHEET 03	1

ASSB_NAME	PART NO.	NAME	QTY
ELECTRICAL CABINET STEEL SHEET ASSY	350200601	ELECTRICAL CABINET STEEL SHEET 06	1

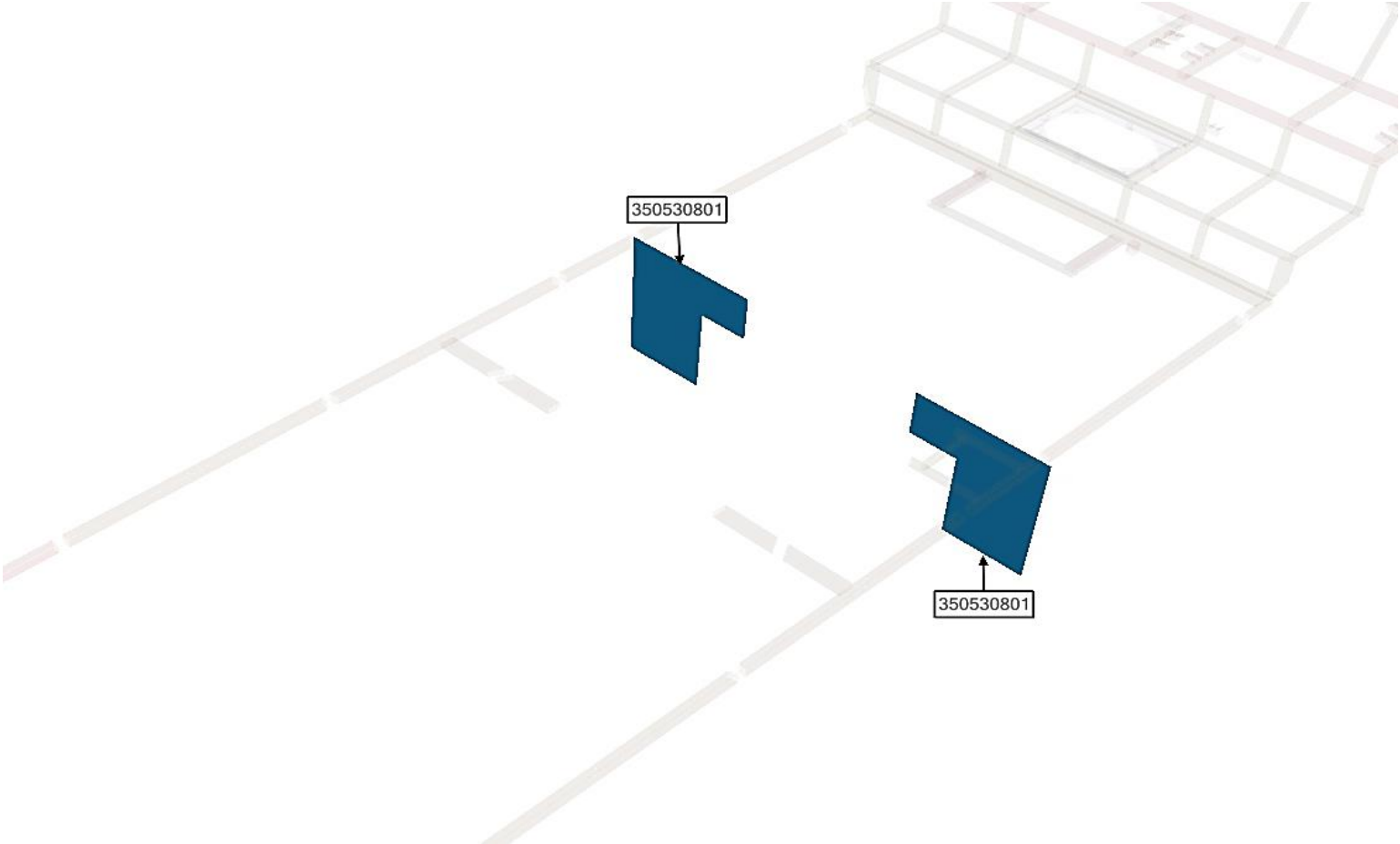

ASSB_NAME	PART NO.	NAME	QTY
OIL TANK STEEL SHEET ASSY	350530801	FUEL TANK STEEL SHEET 01	2

ASSB_NAME	PART NO.	NAME	QTY
OIL TANK STEEL SHEET ASSY			

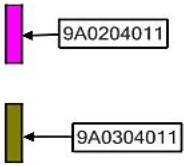

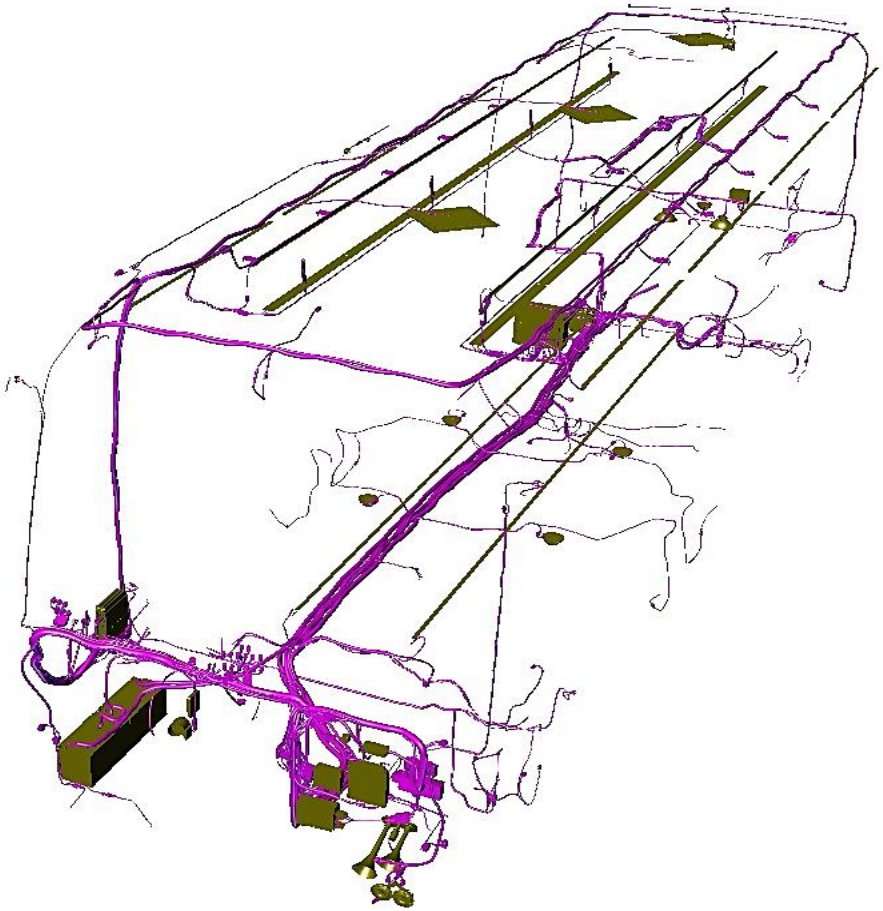

ASSB_NAME	PART NO.	NAME	QTY
ELECTRIAL SYSTEM	9A0304011	ELECTRICAL DEVICE	1
	9A0204011	CONDUCTOR WIRE SYSTEM	2

ASSB_NAME	PART NO.	NAME	QTY
ELECTRIAL SYSTEM			

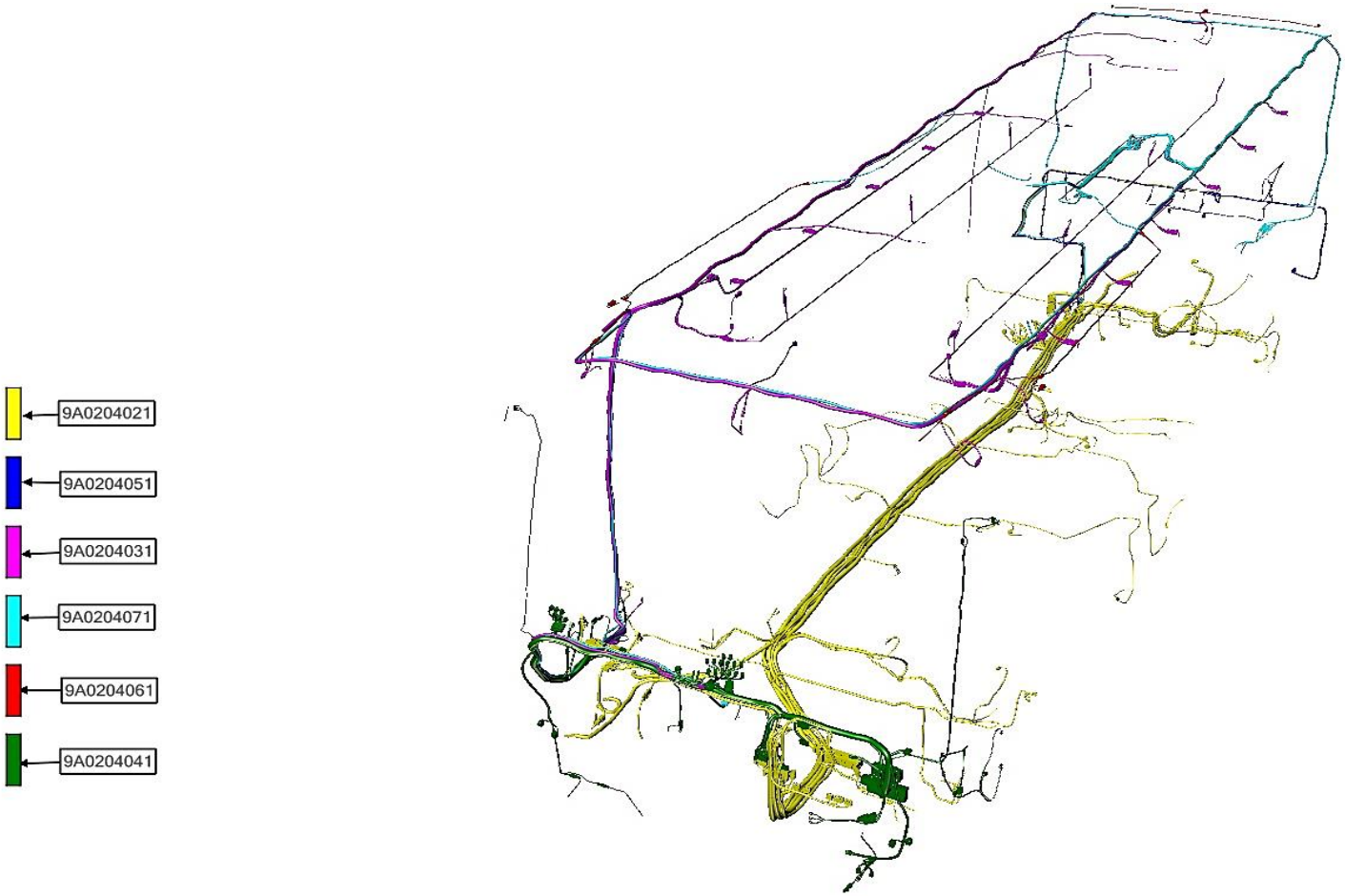

ASSB_NAME	PART NO.	NAME	QTY
CONDUCTOR WIRE SYSTEM	9A0204021	CHASSIS ELECTRICAL HARNESS	1
	9A0204051	REAR ELECTRICAL HARNESS	1
	9A0204031	HEADLINING ELECTRICAL HARNESS	1
	9A0204071	A/C ELECTRICAL HARNESS	1
	9A0204061	SPOILER ELECTRICAL HARNESS	1
	9A0204041	DASHBOARD ELECTRICAL HARNESS	1

ASSB_NAME	PART NO.	NAME	QTY

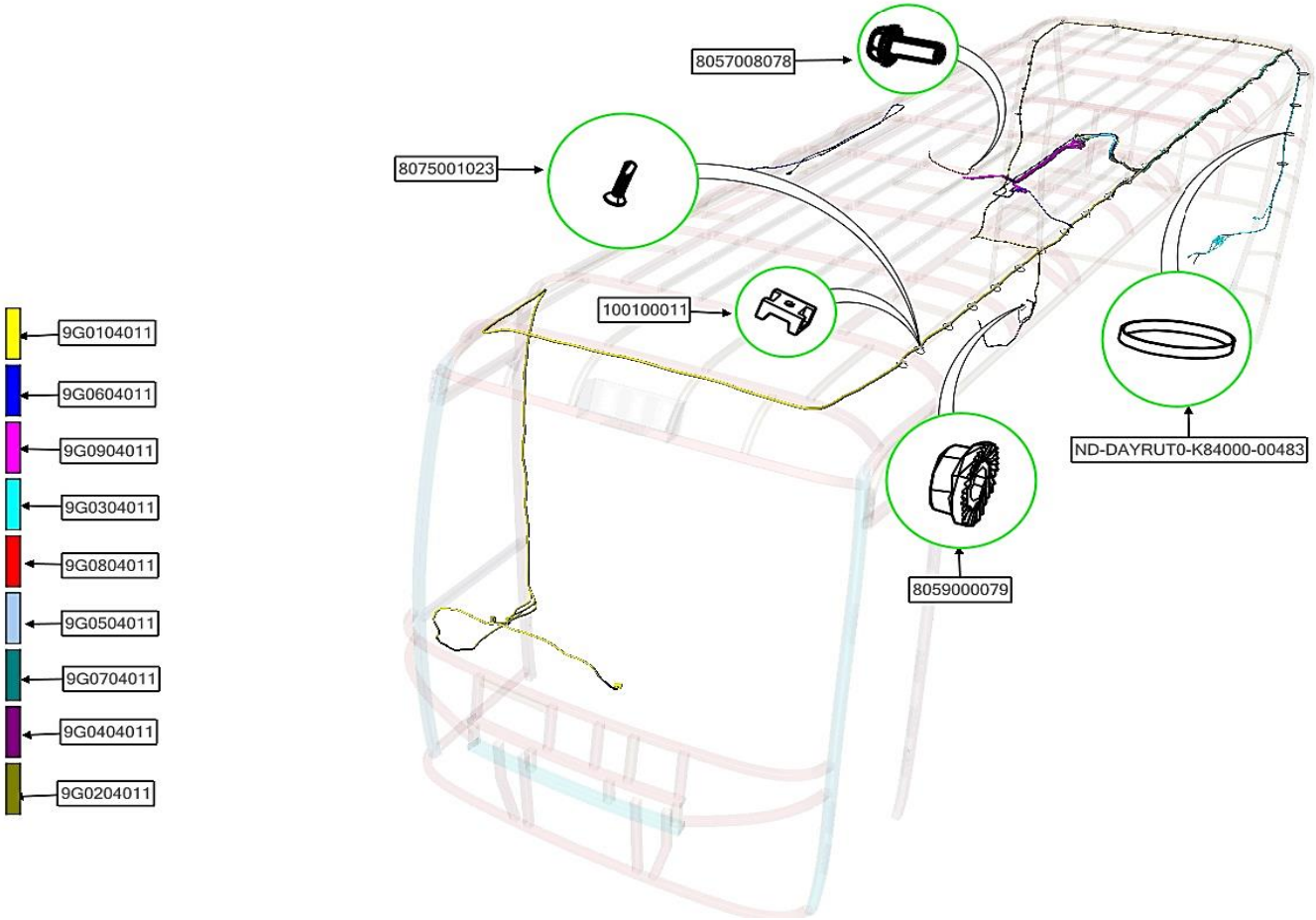

ASSB_NAME	PART NO.	NAME	QTY
A/C ELECTRICAL HARNESS	9G0104011	A/C SWITCH WIRE	1
	9G0604011	A/C LAMP WIRE	1
	9G0904011	A/C CONNECTING ELECTRICAL HARNESS	1
	9G0304011	CONNECTING COMPRESSOR WIRE	1
	9G0804011	A/C MASS WIRE	1
	9G0504011	MASS RELAY WIRE	1
	9G0704011	FUSE RELAY WIRE	1

ASSB_NAME	PART NO.	NAME	QTY
A/C ELECTRICAL HARNESS	9G0404011	A/C FUSE POWER WIRE	1
	9G0204011	A/C POWER WIRE	1
	8057008078	BOLT 08020125	1
	ND-DAYRUT0-K84000-00483	CABLE TIE 08400	1
	8059000079	NUT 05100	1
	100100011	CABLE TIE MOUNT	1
	8075001023	CREW 0420	1

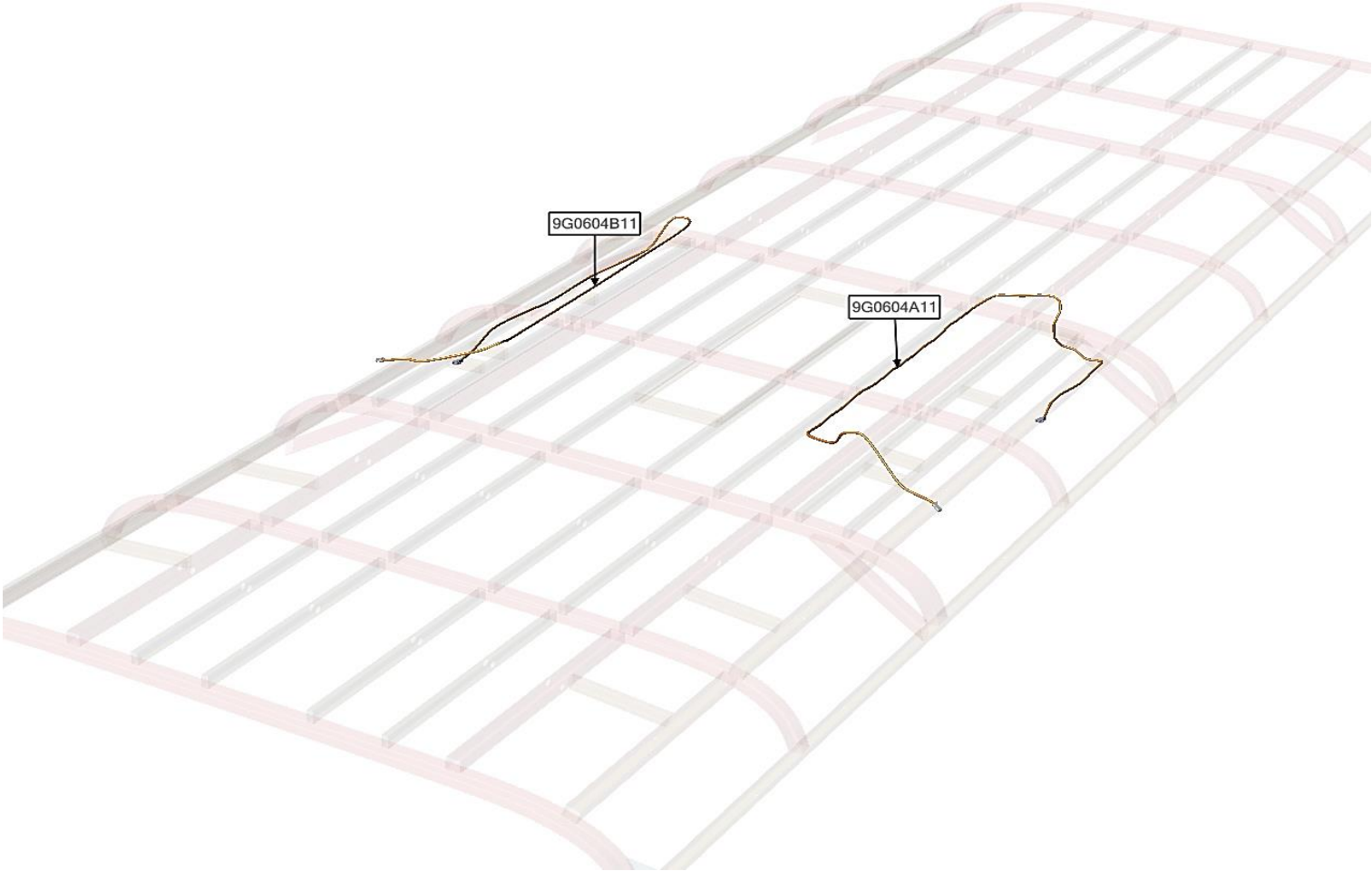

ASSB_NAME	PART NO.	NAME	QTY
A/C LAMP WIRE	9G0604A11	A/C LEFT LAMP ELECTRICAL HARNESS	1
	9G0604B11	A/C RIGHT LAMP ELECTRICAL HARNESS	1

ASSB_NAME	PART NO.	NAME	QTY

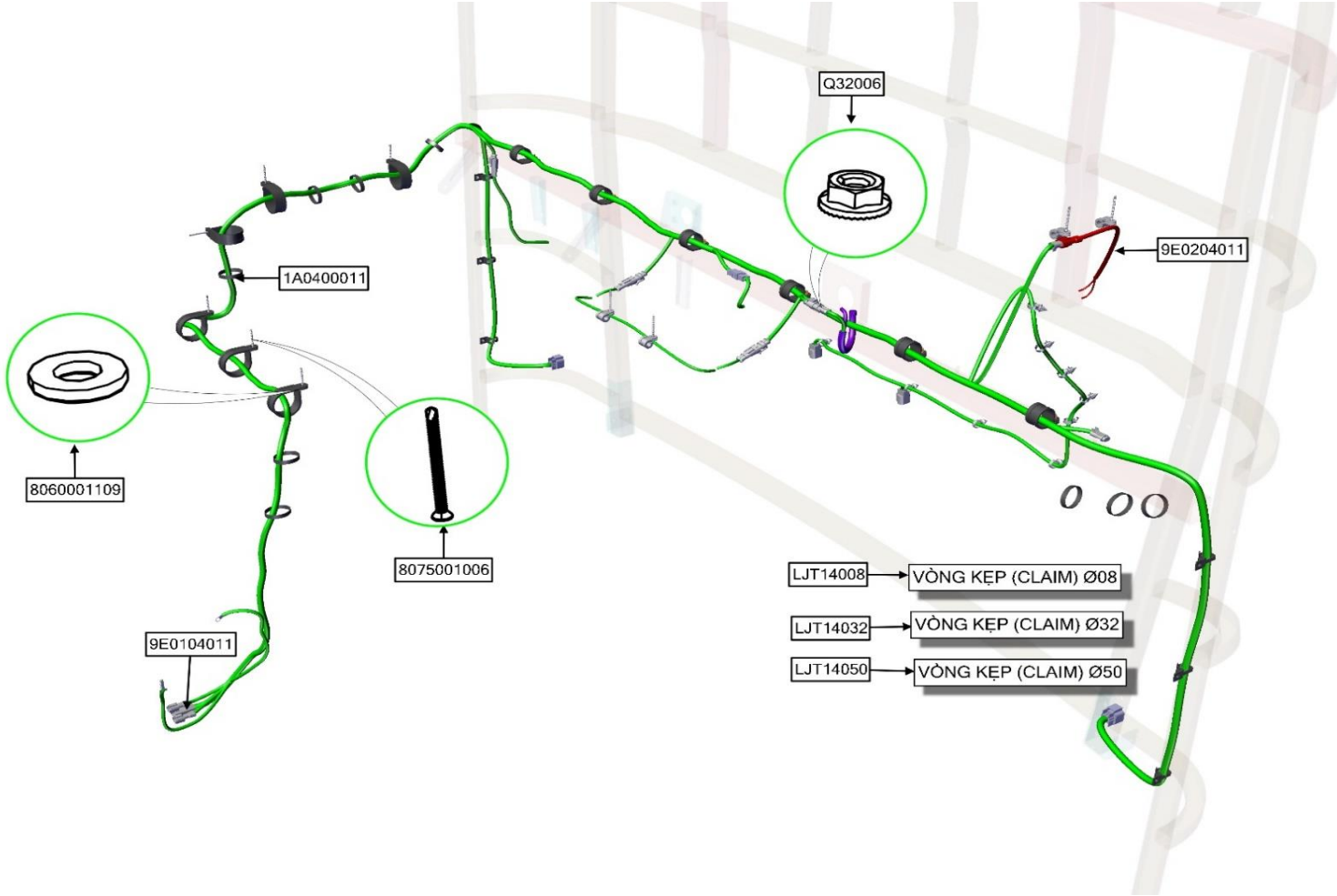

ASSB_NAME	PART NO.	NAME	QTY
REAR ELECTRICAL HARNESS	9E0204011	ENGINE FLAP SWITCH WIRE	1
	9E0104011	REAR SECTION WIRE	1
	1A0400011	CABLE TIE 08400	9
	Q32006	NUT 06100	6
	8075001006	CREW 0450	10
	8060001109	WASHER Ø06	6
	LJT14008	CLAIM Ø08	4

ASSB_NAME	PART NO.	NAME	QTY
REAR ELECTRICAL HARNESS	LJT14032	CLAIM Ø32	6
	LJT14050	CLAIM Ø50	6
	9B0604011	ABS WIRE	1
	9B0B04011	BATTERY WIRE	1
	9B0504011	ENGINE WIRE	1
	9B0F04011	ENGINE ELECTRIC CONTROL UNIT WI	1
	9B0D04011	STARTOR WIRE	1

ASSB_NAME	PART NO.	NAME	QTY
REAR ELECTRICAL HARNESS	9B0104011	CHASSIS WIRE	1
	9B0C04011	MASS ENGINE WIRE	1
	9B0204011	DASHBOARD POWER WIRE	1

ASSB_NAME	PART NO.	NAME	QTY
REAR ELECTRICAL HARNESS			

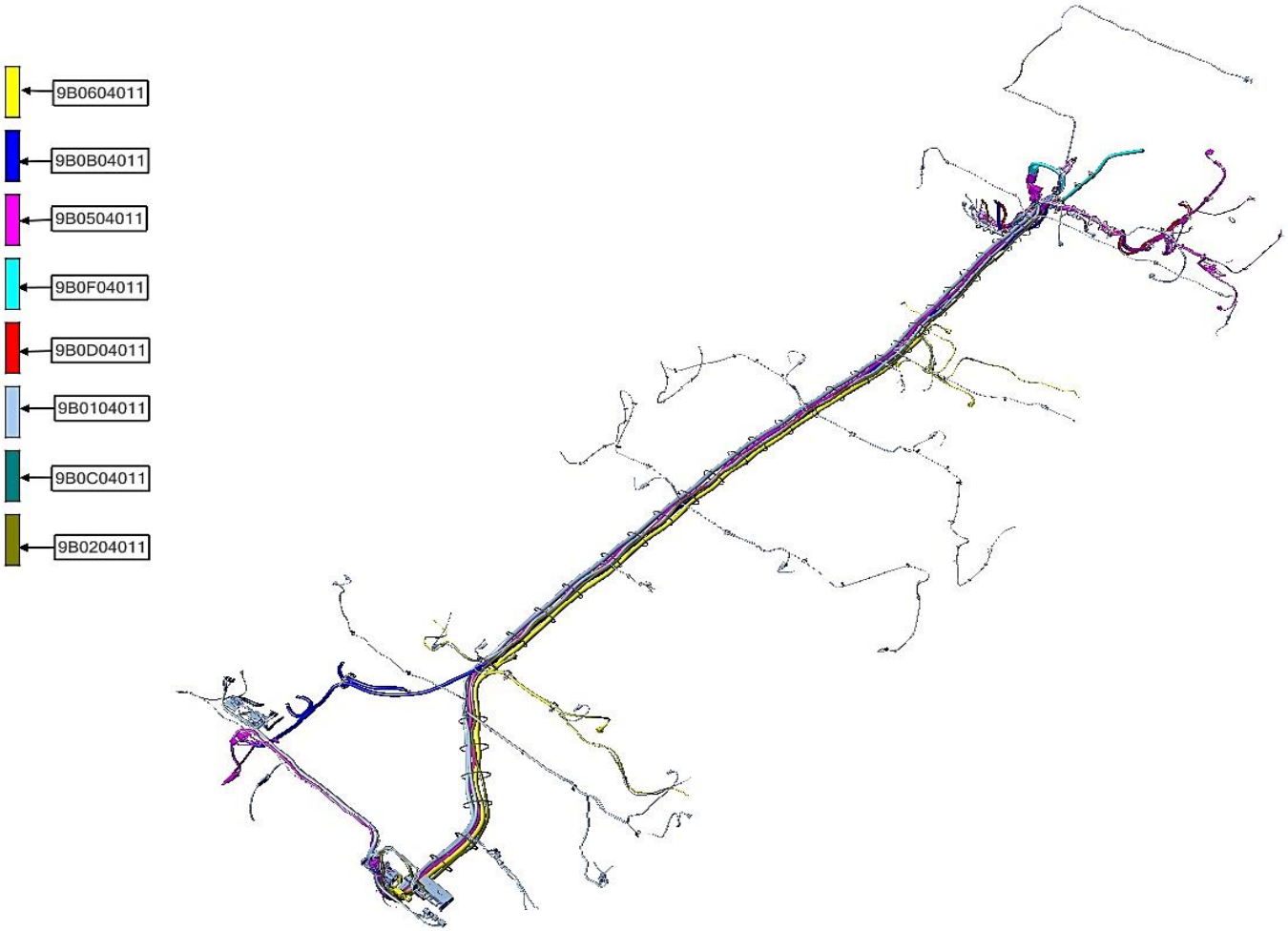

ASSB_NAME	PART NO.	NAME	QTY
CHASSIS ELECTRICAL HARNESS	9B0604011	ABS WIRE	1
	9B0B04011	BATTERY WIRE	1
	9B0504011	ENGINE WIRE	1
	9B0F04011	ENGINE ELECTRIC CONTROL UNIT WIRE	1
	9B0D04011	STARTOR WIRE	1
	9B0104011	CHASSIS WIRE	1
	9B0C04011	MASS ENGINE WIRE	1

ASSB_NAME	PART NO.	NAME	QTY
CHASSIS ELECTRICAL HARNESS	9B0204011	DASHBOARD POWER WIRE	1

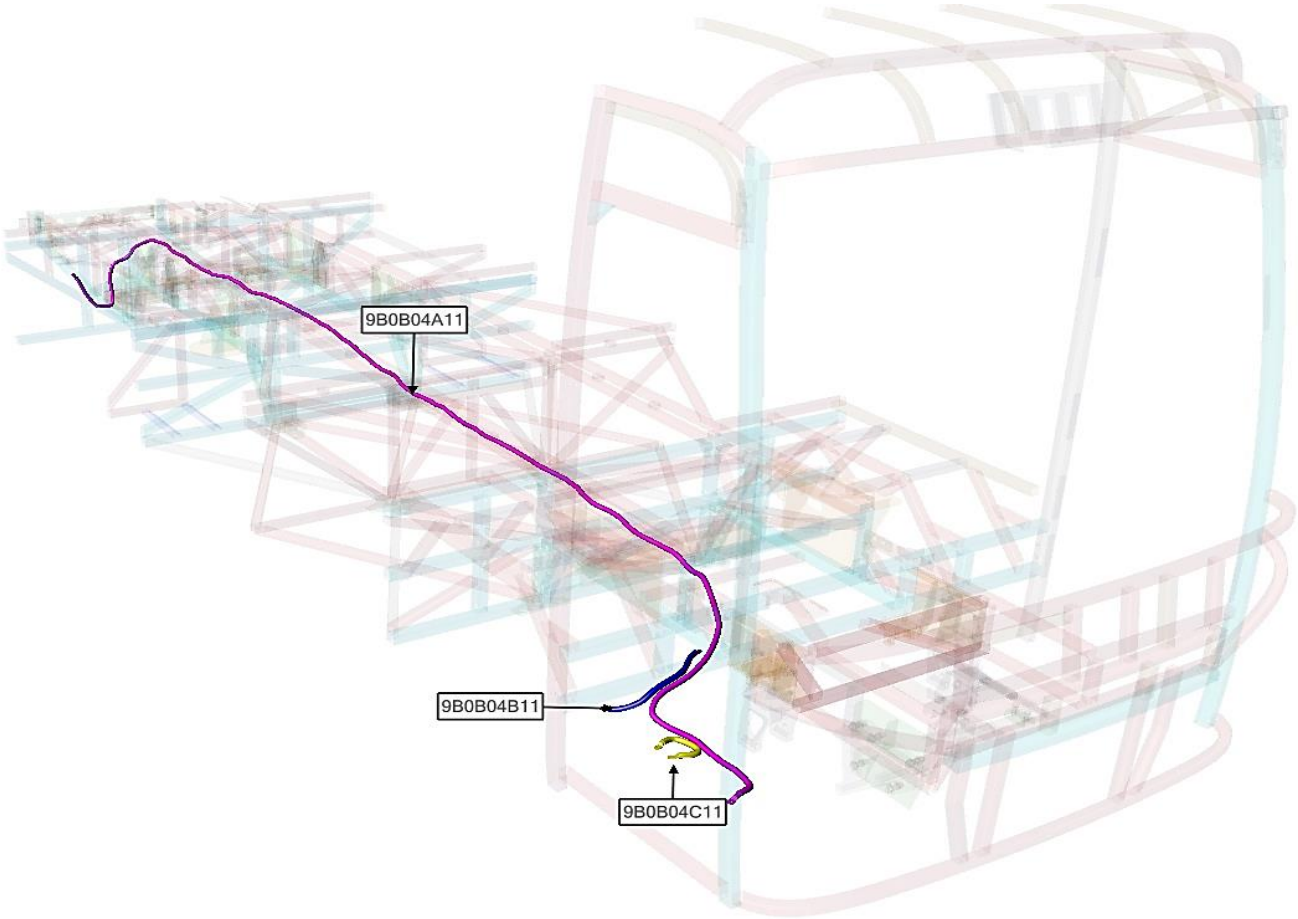

ASSB_NAME	PART NO.	NAME	QTY
BATTERY WIRE	9B0B04A11	BATTERY POWER WIRE	1
	9B0B04B11	MASS WIRE	1
	9B0B04C11	CONNECTING WIRE	1

ASSB_NAME	PART NO.	NAME	QTY
BATTERY WIRE			

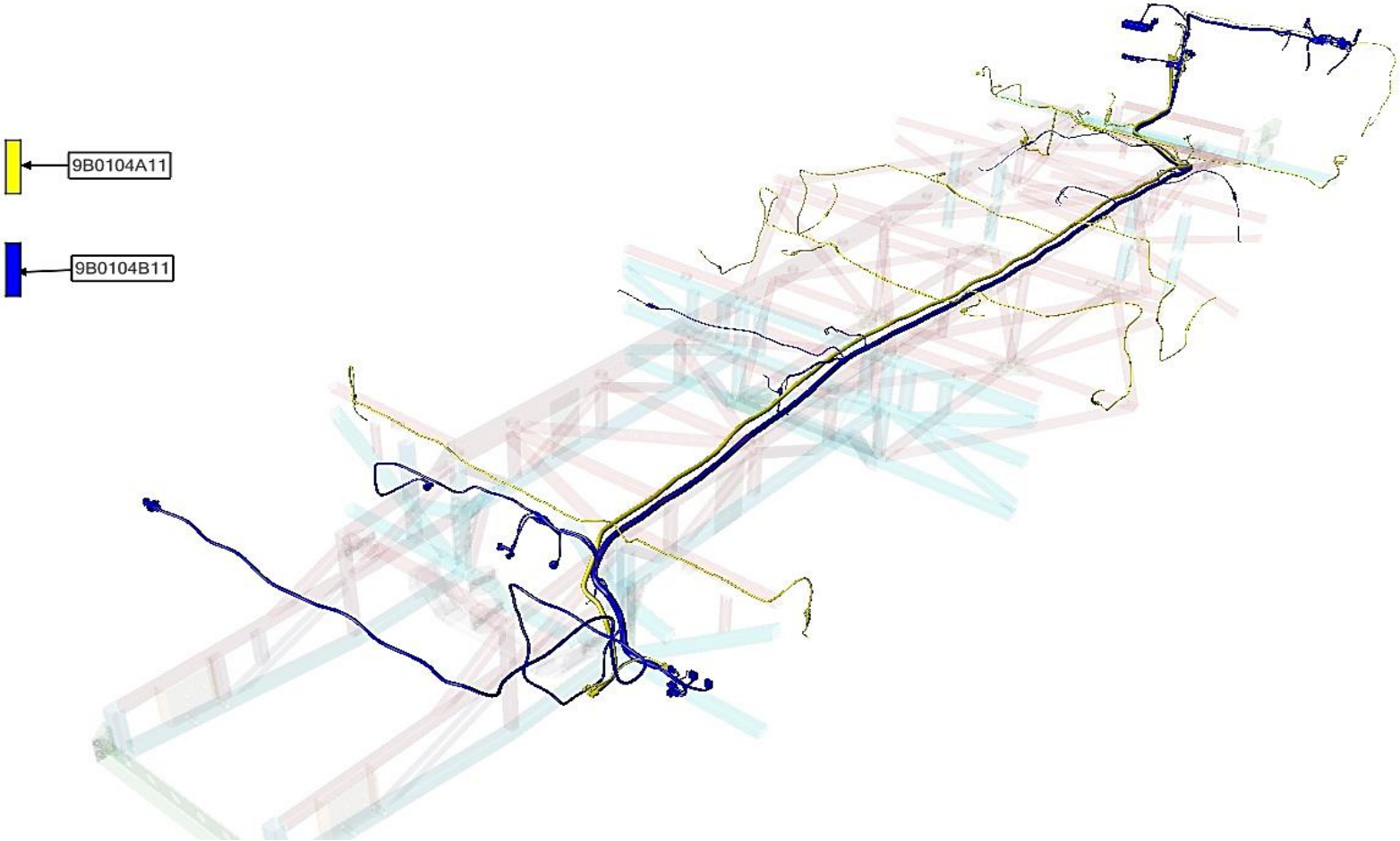

ASSB_NAME	PART NO.	NAME	QTY
CHASSIS WIRE	9B0104A11	CHASSIS A WIRE	1
	9B0104B11	CHASSIS B WIRE	1

ASSB_NAME	PART NO.	NAME	QTY
CHASSIS WIRE			

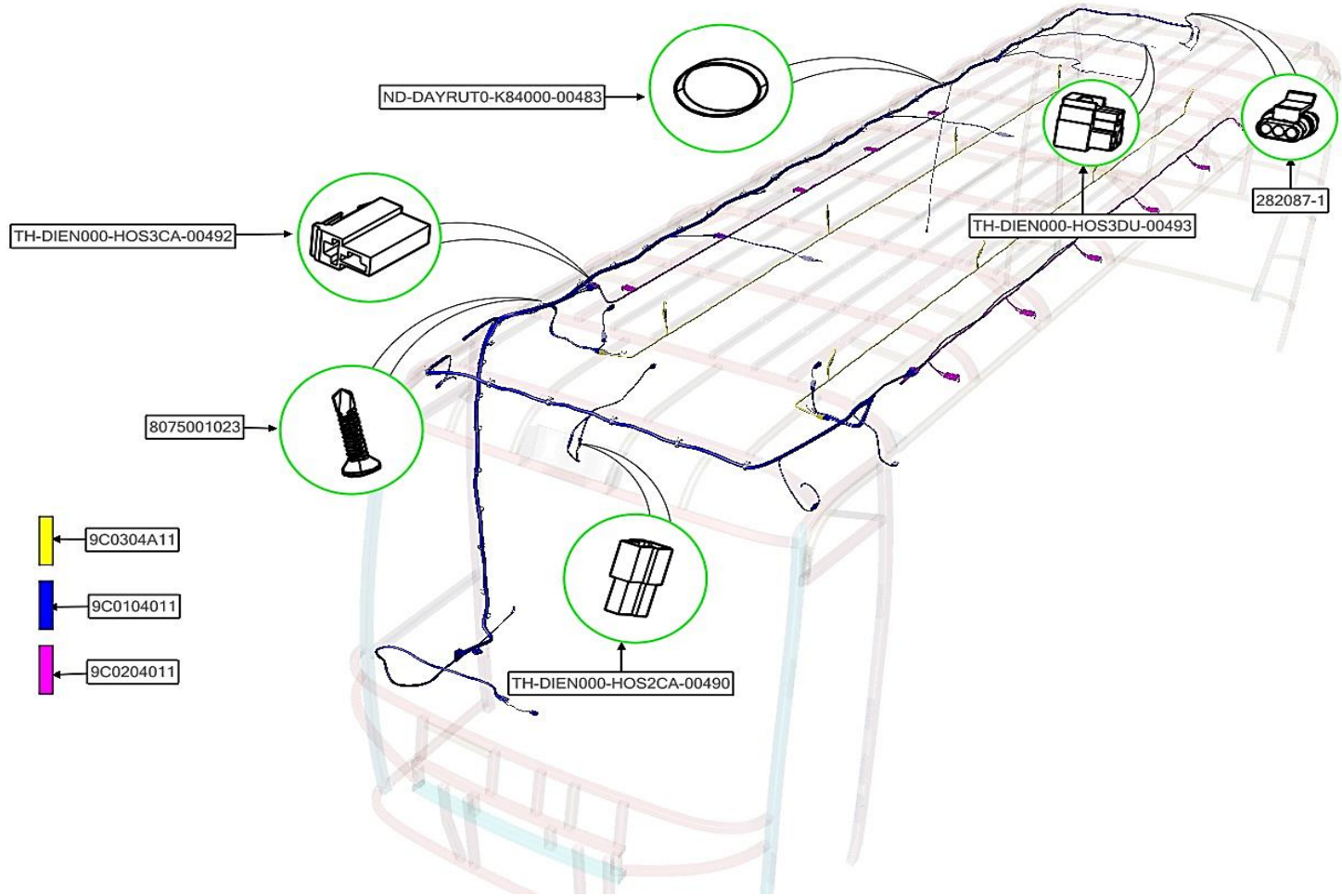

ASSB_NAME	PART NO.	NAME	QTY
HEADLINING ELECTRICAL HARNESS	9C0304011	HEADLIGHT WIRE	1
	9C0104011	HEADLINING WIRE	1
	9C0204011	INTERGRATION ELECTRICAL HARNESS	1
	TH-DIEN000-HOS3CA-00492	TERMINAL ST740255-1	30
	TH-DIEN000-HOS3CA-00492	CONNECTOR 620044	3
	TH-DIEN000-HOS2CA-00490	CONNECTOR 620042	9
	TH-DIEN000-HOS3DU-00493	CONNECTOR 610045	3

ASSB_NAME	PART NO.	NAME	QTY
HEADLINING ELECTRICAL HARNESS	ND-DAYRUT0-K84000-00483	CABLE TIE 08400	1
	282087-1	CONNECTOR 282087	1
	8075001023	CREW 0420	1
	9C0304A11	LUGGAGES RACK LIGHTS WIRE	1

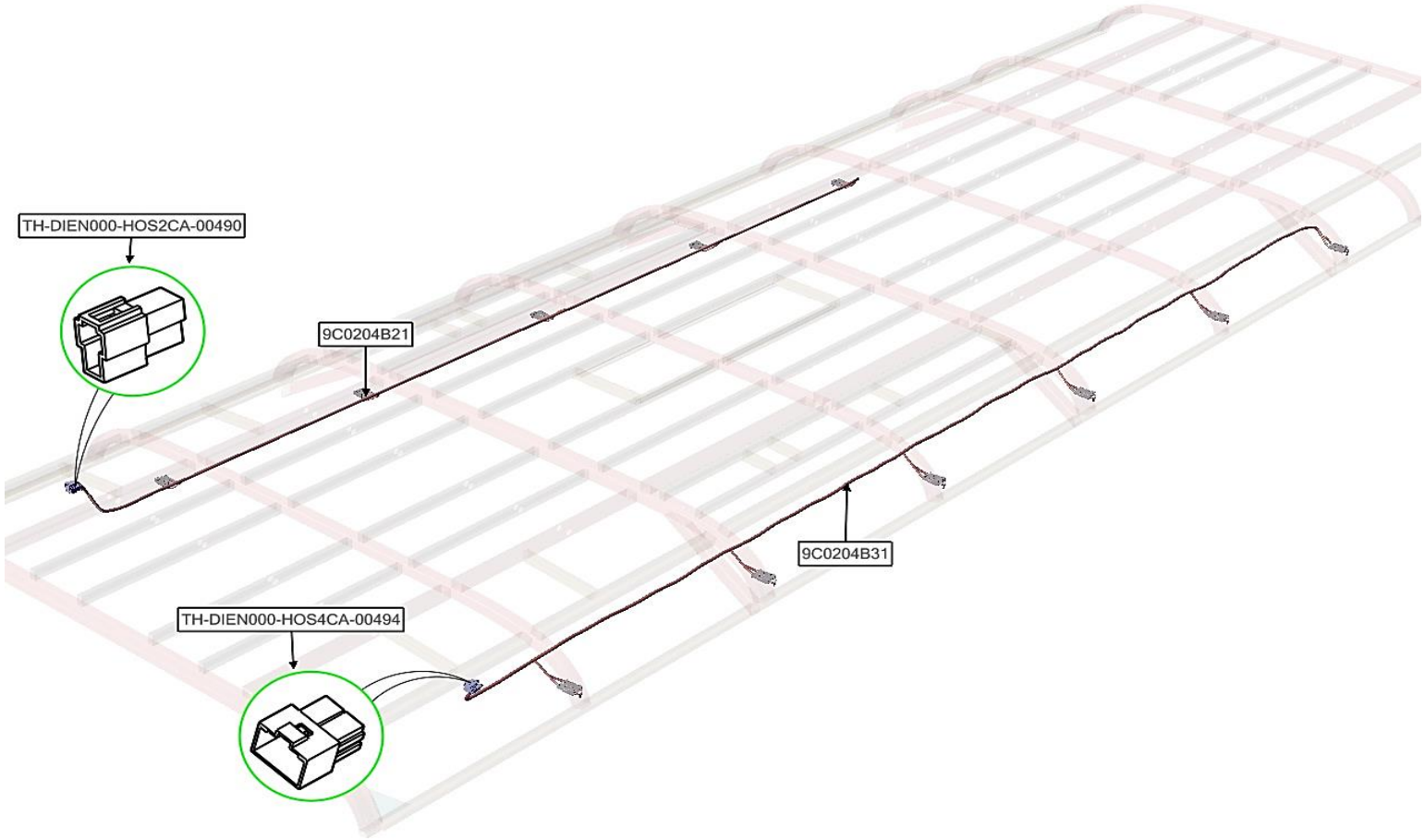

ASSB_NAME	PART NO.	NAME	QTY
INTERGRATION ELECTRICAL HARNESS	9C0204B31	LH LAMP-SPEAKER WIRE	1
	9C0204B21	RH LAMP-SPEAKER WIRE	1
	TH-DIEN000-HOS2CA-00490	CONNECTOR 620042	4
	TH-DIEN000-HOS4CA-00494	CONNECTOR 620046	2

ASSB_NAME	PART NO.	NAME	QTY
INTERGRATION ELECTRICAL HARNESS			

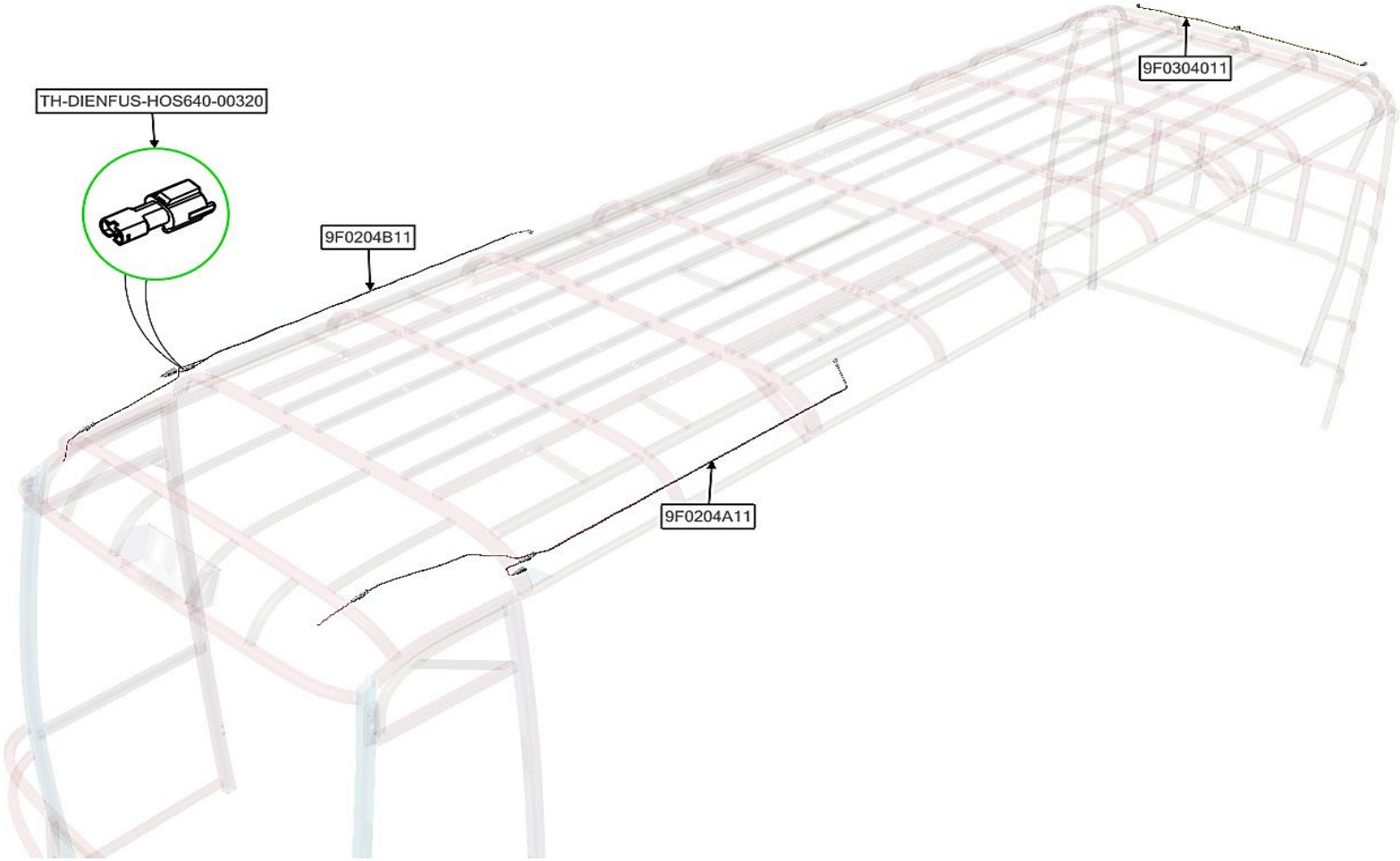

ASSB_NAME	PART NO.	NAME	QTY
SPOILER ELECTRICAL HARNESS	9F0304011	REAR SPOILER WIRE	1
	9F0204A11	LEFT SPOILER WIRE	1
	9F0204B11	RIGHT SPOILER WIRE	1
	TH-DIENFUS-HOS640-00320	CONNECTOR 640322-5	2

ASSB_NAME	PART NO.	NAME	QTY
SPOILER ELECTRICAL HARNESS			

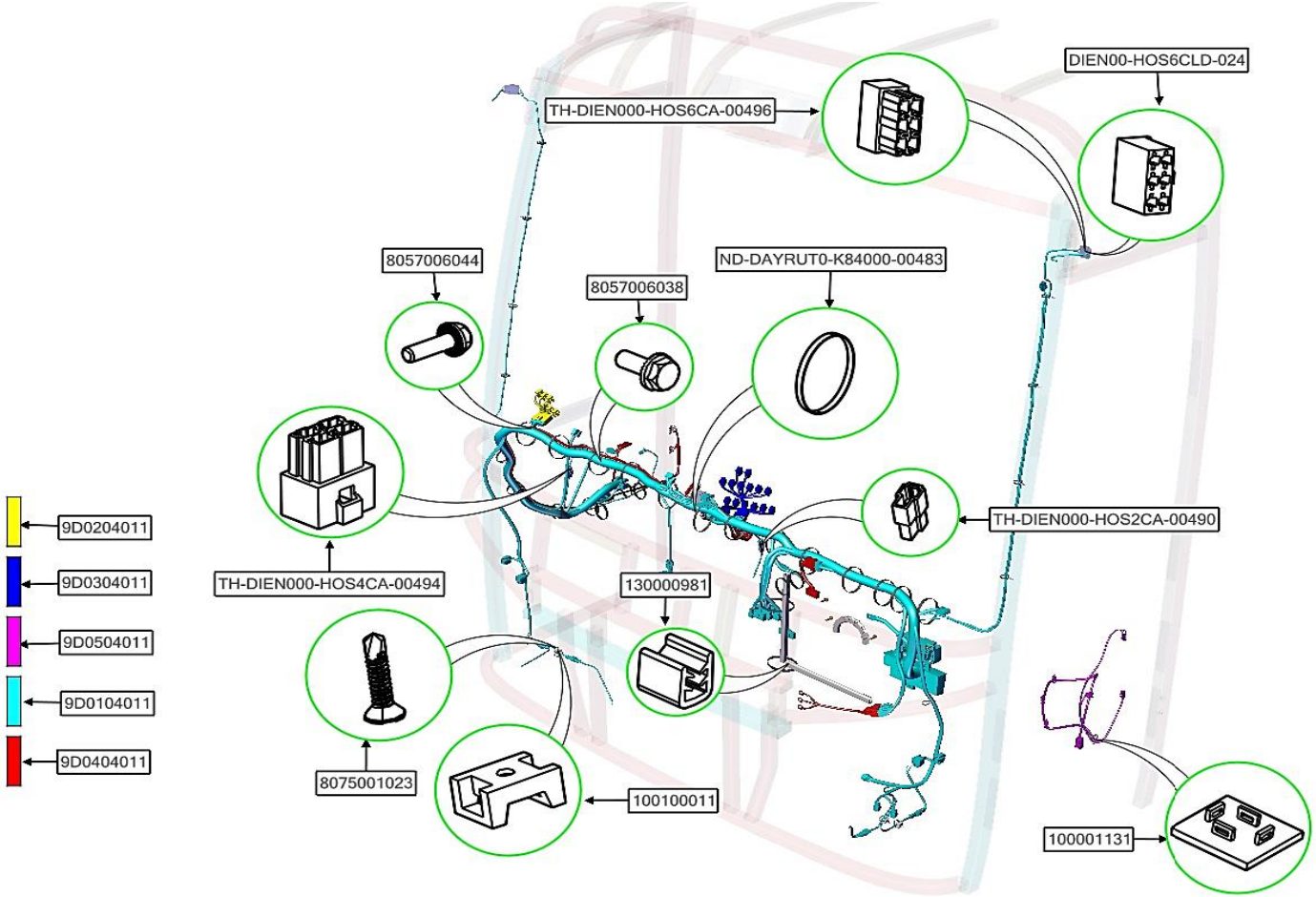

ASSB_NAME	PART NO.	NAME	QTY
DASHBOARD ELECTRICAL HARNESS	9D0204011	RIGHT SWITCH WIRE	1
	9D0304011	LEFT SWITCH WIRE	1
	9D0504011	CONTROLING DOOR WIRE	1
	9D0104011	DASHBOARD WIRE	1
	9D0404011	INTERGRATED DASHBOARD WIRE	1
	8057006038	BOLT 06015100	1
	8057006044	BOLT 06020100	8

ASSB_NAME	PART NO.	NAME	QTY
DASHBOARD ELECTRICAL HARNESS			

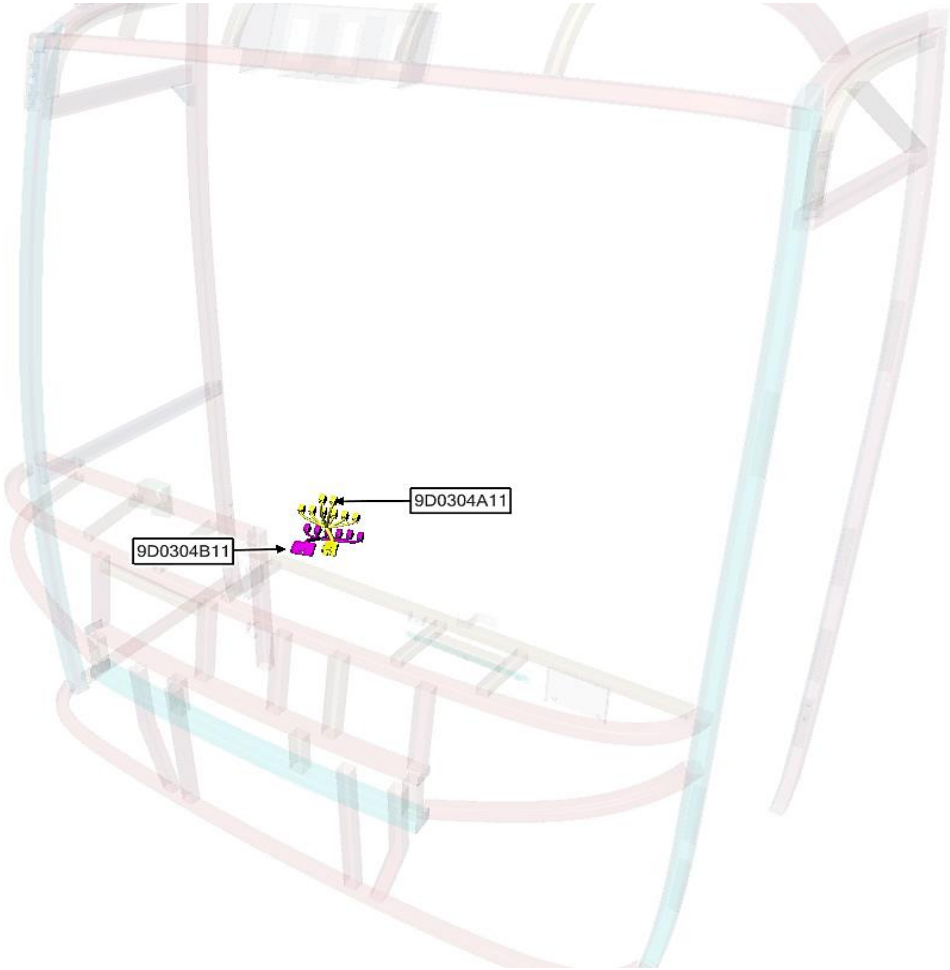

ASSB_NAME	PART NO.	NAME	QTY
LEFT SWITCH WIRE	9D0304A11	LEFT SWITCH WIRE 1	1
	9D0304B11	LEFT SWITCH WIRE 2	1

ASSB_NAME	PART NO.	NAME	QTY
LEFT SWITCH WIRE			

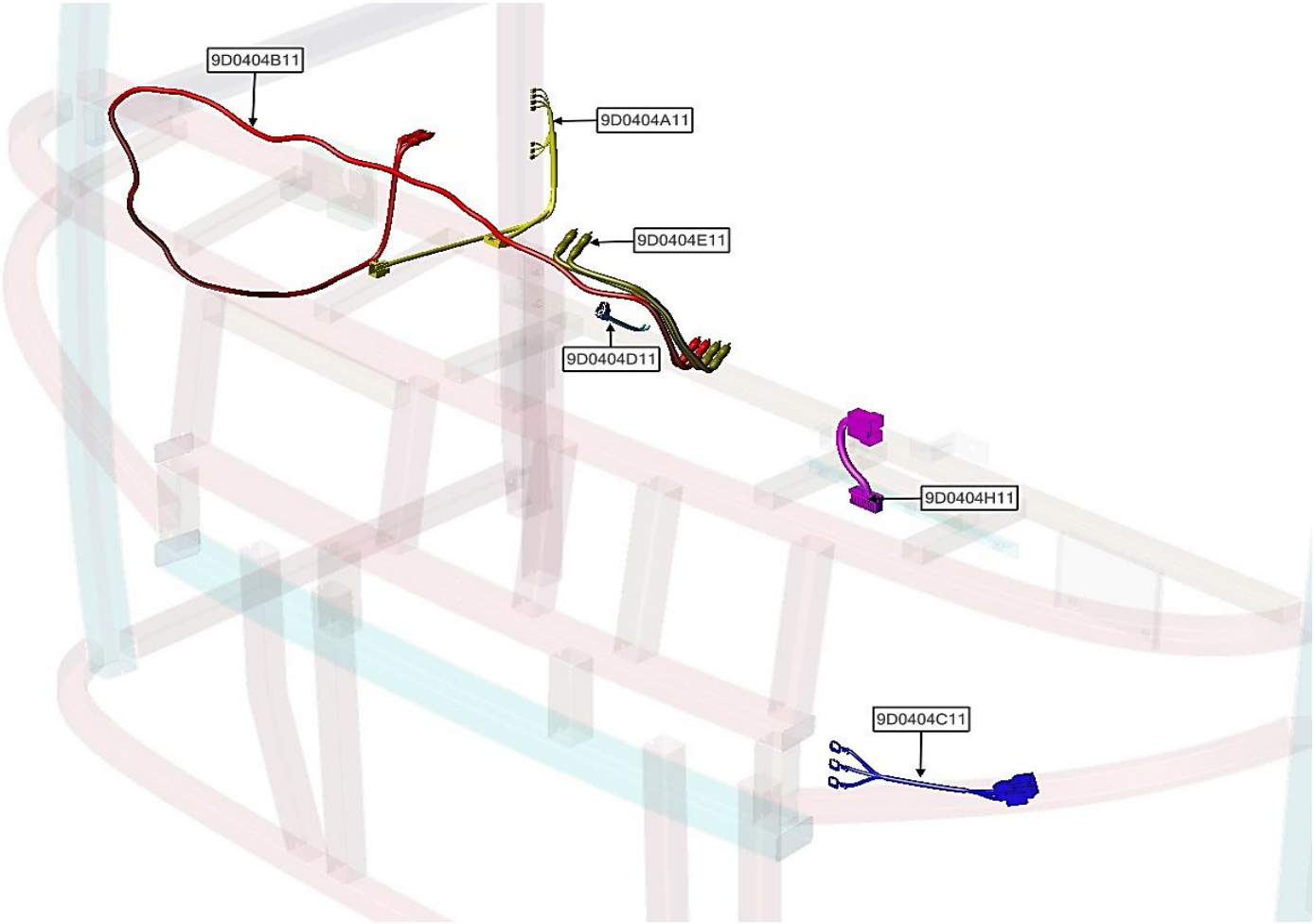

ASSB_NAME	PART NO.	NAME	QTY
INTERGRATED DASHBOARD WIRE	9D0404A11	AMPLIFIER WIRE	1
	9D0404B11	AMPLIFIER SIGNAL WIRE	1
	9D0404C11	TRANSFORMER WIRE	1
	9D0404E11	MIXER SIGNAL WIRE	1
	9D0404D11	CONNECTING MIXER WIRE	1
	9D0404H11	RKE WIRE	1

ASSB_NAME	PART NO.	NAME	QTY
INTERGRATED DASHBOARD WIRE			

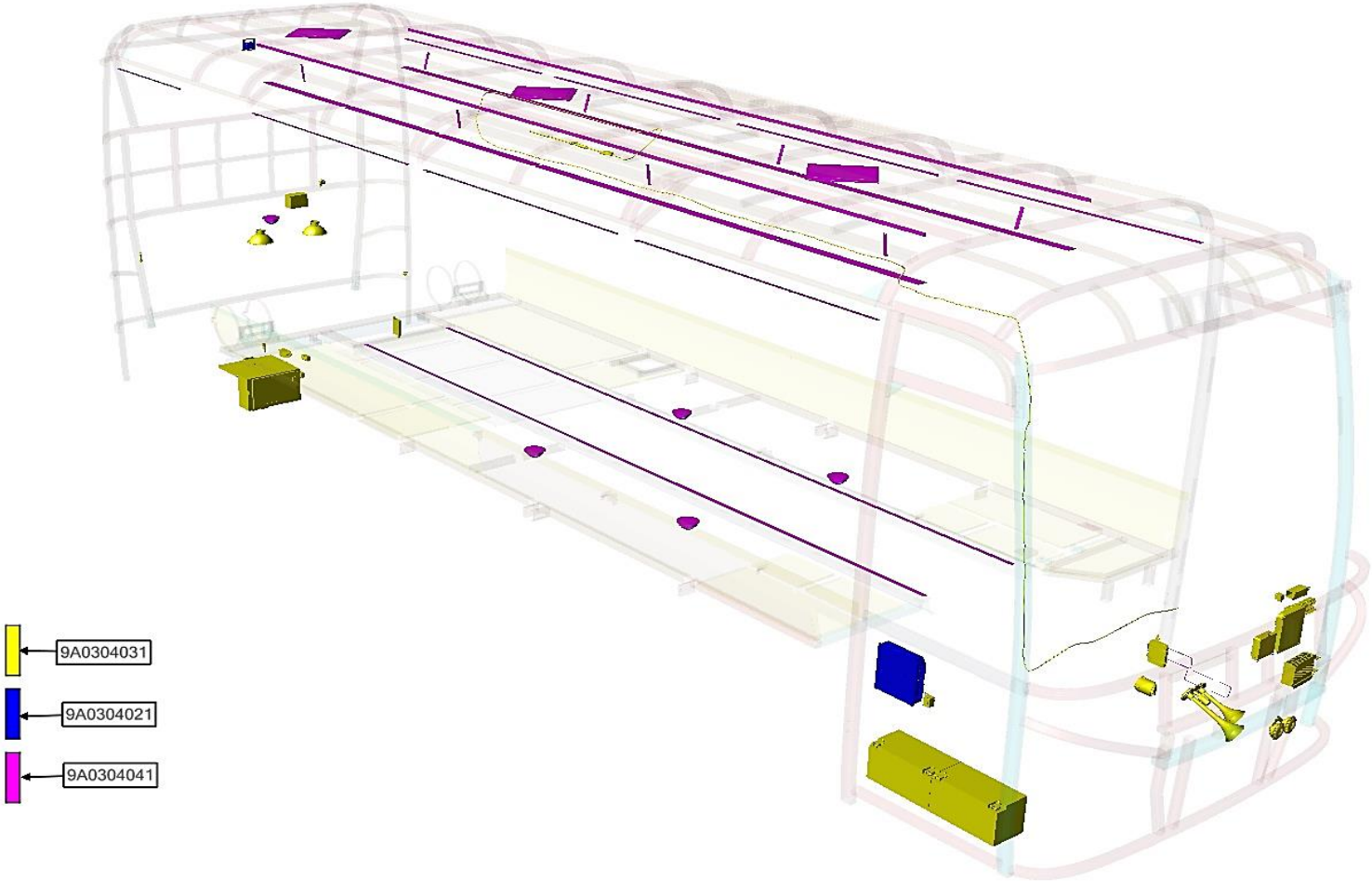

ASSB_NAME	PART NO.	NAME	QTY
ELECTRICAL DEVICE	9A0304021	SOUND AND IMAGE SYSTEM	1
	9A0304031	SAFETY AND CONVENIENCE SYSTEM	1
	9A0304041	LIGHTING SYSTEM	1

ASSB_NAME	PART NO.	NAME	QTY
ELECTRICAL DEVICE			

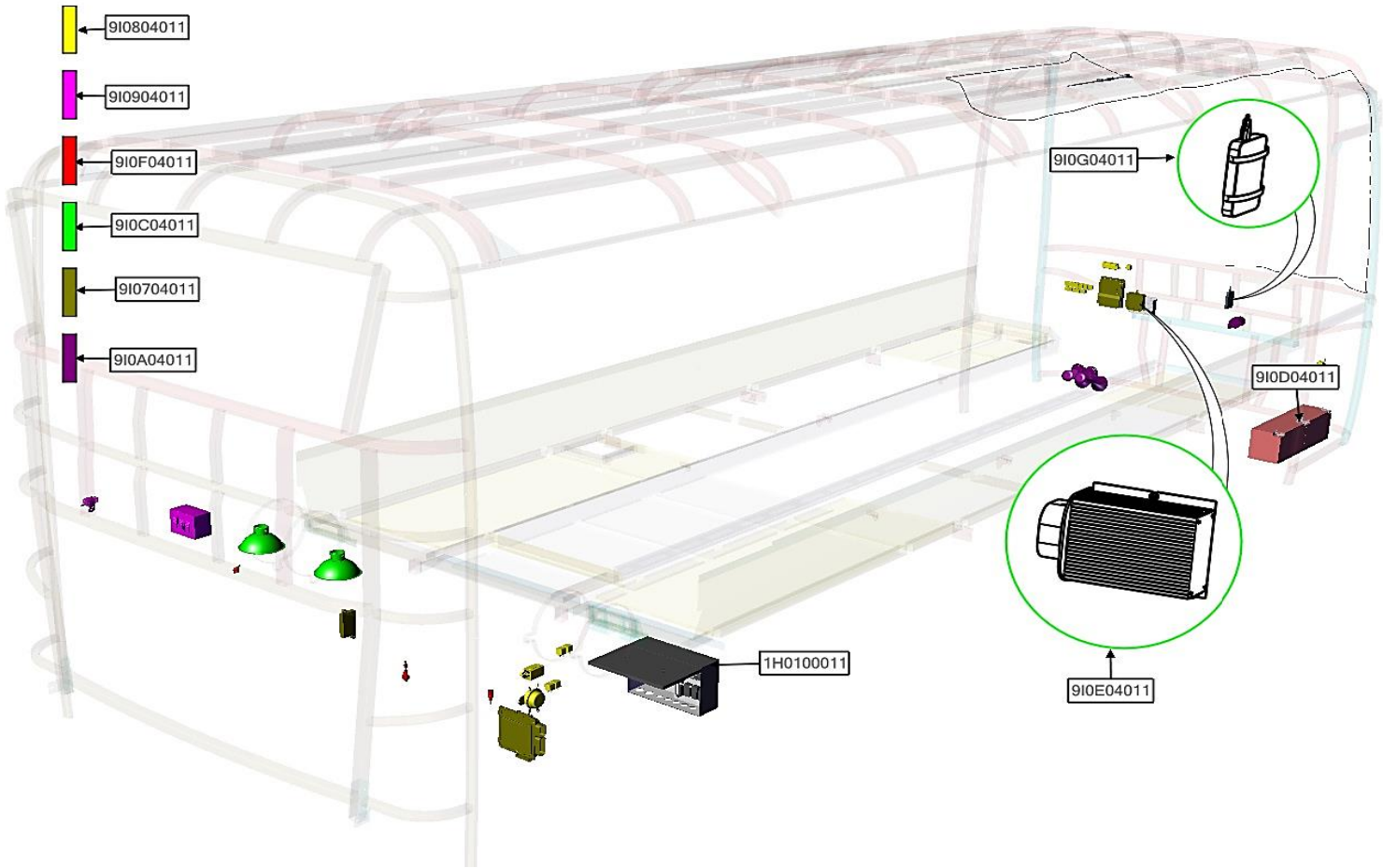

ASSB_NAME	PART NO.	NAME	QTY
SAFETY AND CONVENIENCE SYSTEM	9I0704011	SIGNAL PROCESSOR	1
	9I0804011	FUSE AND RELAY	1
	9I0904011	SWITCHS	1
	9I0A04011	HORN	1
	9I0B04011	ELECTRICAL BOX	1
	9I0C04011	FIRE FIGHTING DEVICE ASSY	1
	9I0D04011	BATTERY ASSY	1

ASSB_NAME	PART NO.	NAME	QTY
SAFETY AND CONVENIENCE SYSTEM			

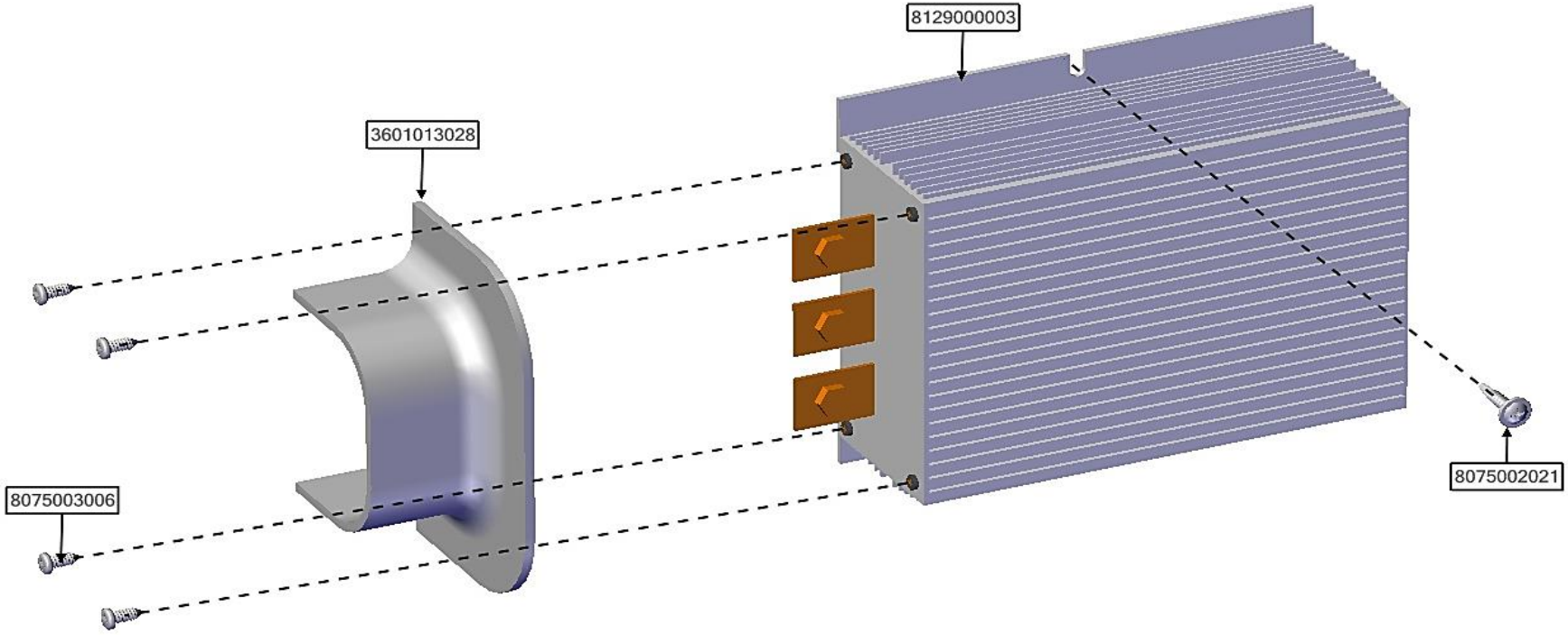

ASSB_NAME	PART NO.	NAME	QTY
TRANSFORMER ASSY	8075003006	CREW 0410	4
	8075002021	CREW 0420	2
	8129000003	TRANSFORMER	1
	3601013028	TRANSFORMER COVER	1

ASSB_NAME	PART NO.	NAME	QTY
TRANSFORMER ASSY			

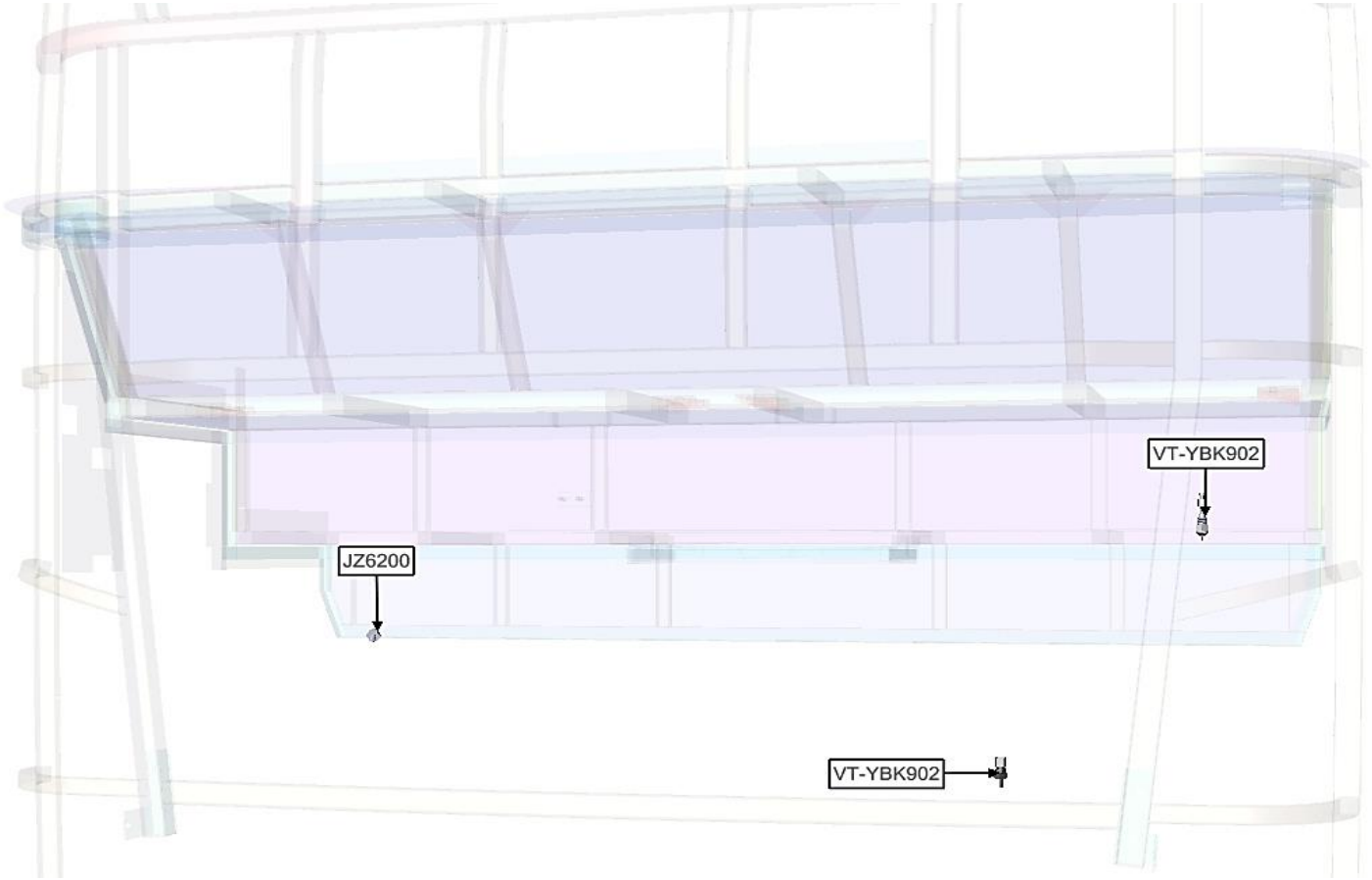

ASSB_NAME	PART NO.	NAME	QTY
SENSOR ASSY	JZ6200	AIR FILTER SENSOR	1
	VT-YBK902	TEMPERATURE SENSOR	1
	VT-YBK902	AIR FLOW SENSOR	1

ASSB_NAME	PART NO.	NAME	QTY
SENSOR ASSY			

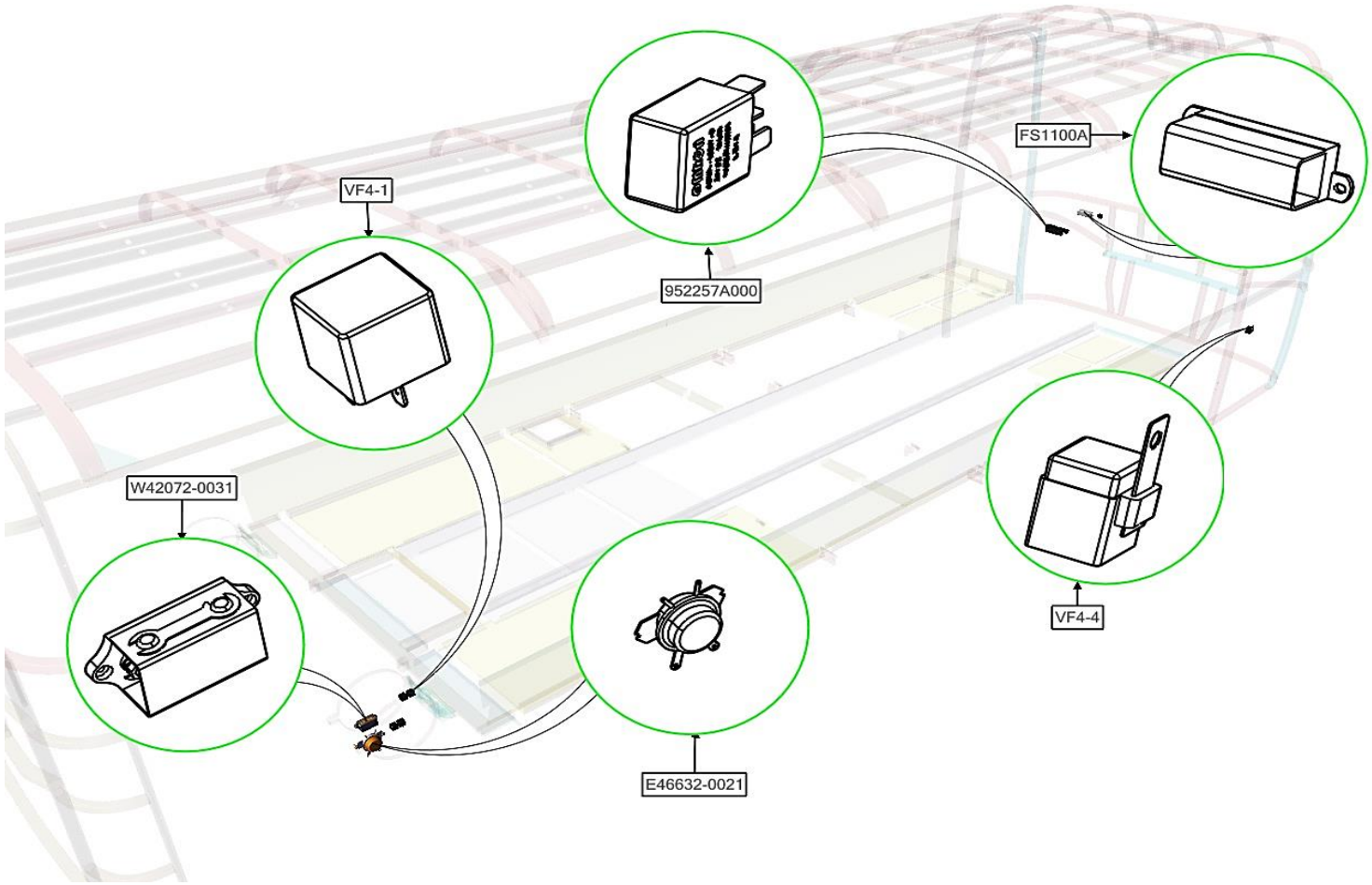

ASSB_NAME	PART NO.	NAME	QTY
FUSE AND RELAY	FS1100A	FUSE 100A	1
	VF4-1	RELAY A	11
	952257A000	RELAY B	8
	VF4-4	RELAY C	1
	W42072-0031	FUSE 100A	1
	E46632-0021	A/C RELAY	1

ASSB_NAME	PART NO.	NAME	QTY
FUSE AND RELAY			

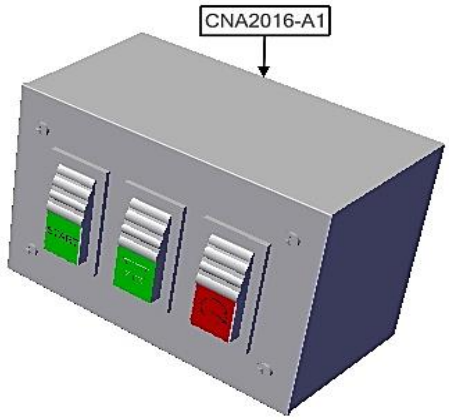

ASSB_NAME	PART NO.	NAME	QTY
SWITCHS	670A-1111020	LIGHT SWITCH	1
	CNA2016-A1	SUB-START SWITCH	1

ASSB_NAME	PART NO.	NAME	QTY
SWITCHS			

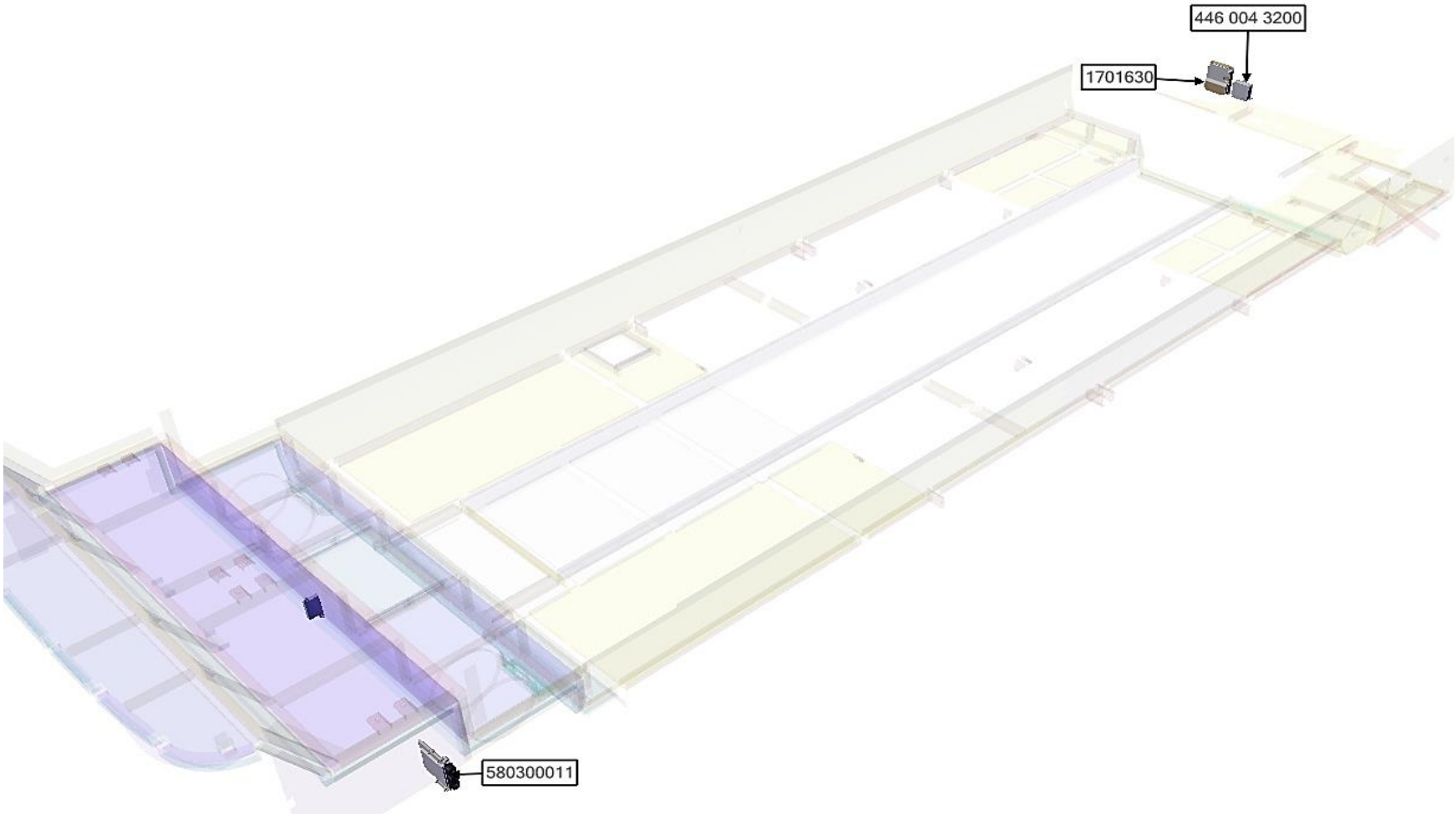

ASSB_NAME	PART NO.	NAME	QTY
SIGNAL PROCESSOR	446 004 3200	ABS CONTROL UNIT	1
	1701630	CENTER CONTROL UNIT	1
	580300011	ENGINE CONTROL UNIT	1

ASSB_NAME	PART NO.	NAME	QTY
SIGNAL PROCESSOR			

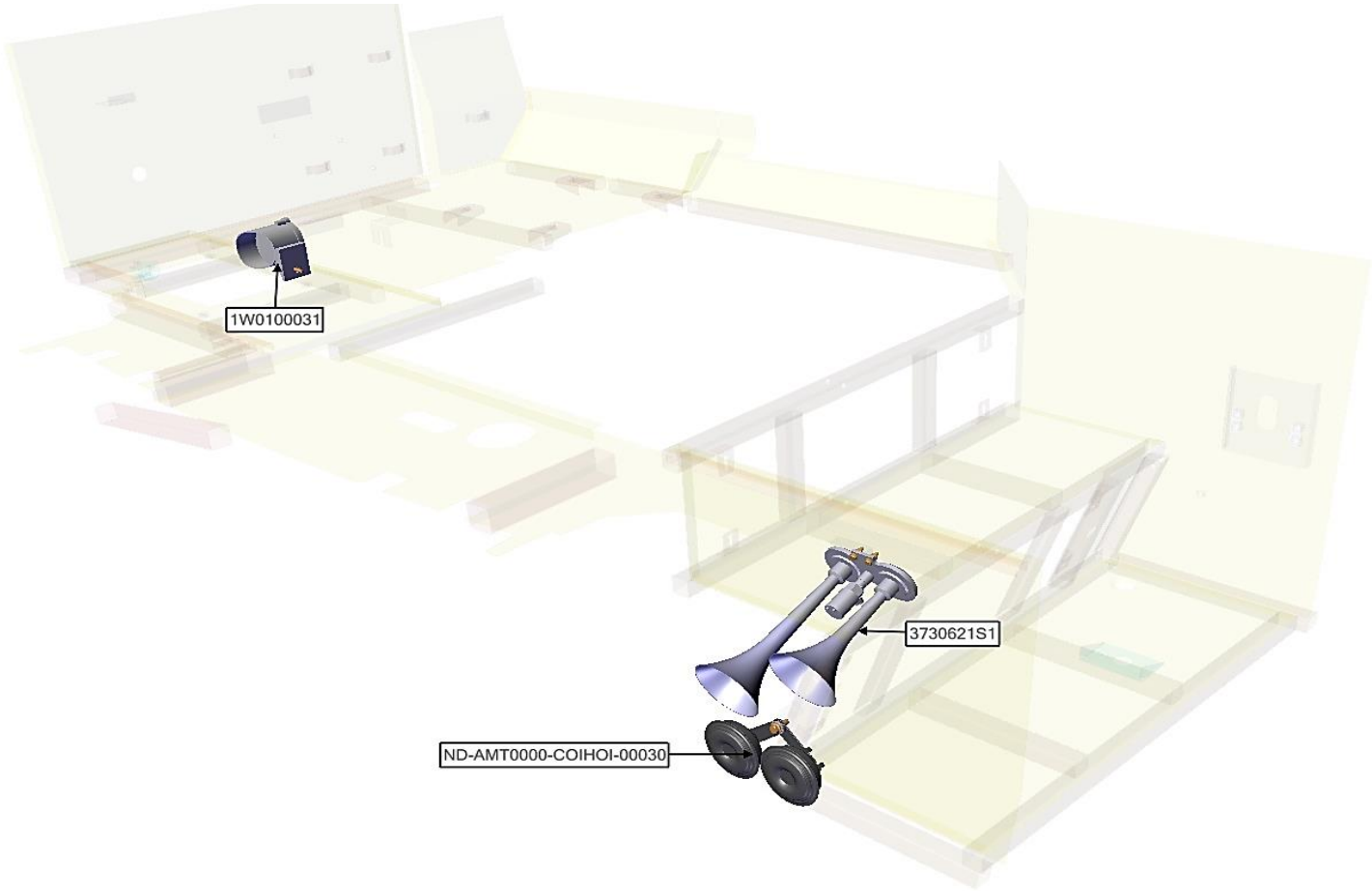

ASSB_NAME	PART NO.	NAME	QTY
HORN	ND-AMT0000-COIHOI-00030	ELECTRICAL HORN	2
	3730621S1	AIR HORN	1
	1W0100031	HORN	1

ASSB_NAME	PART NO.	NAME	QTY
HORN			

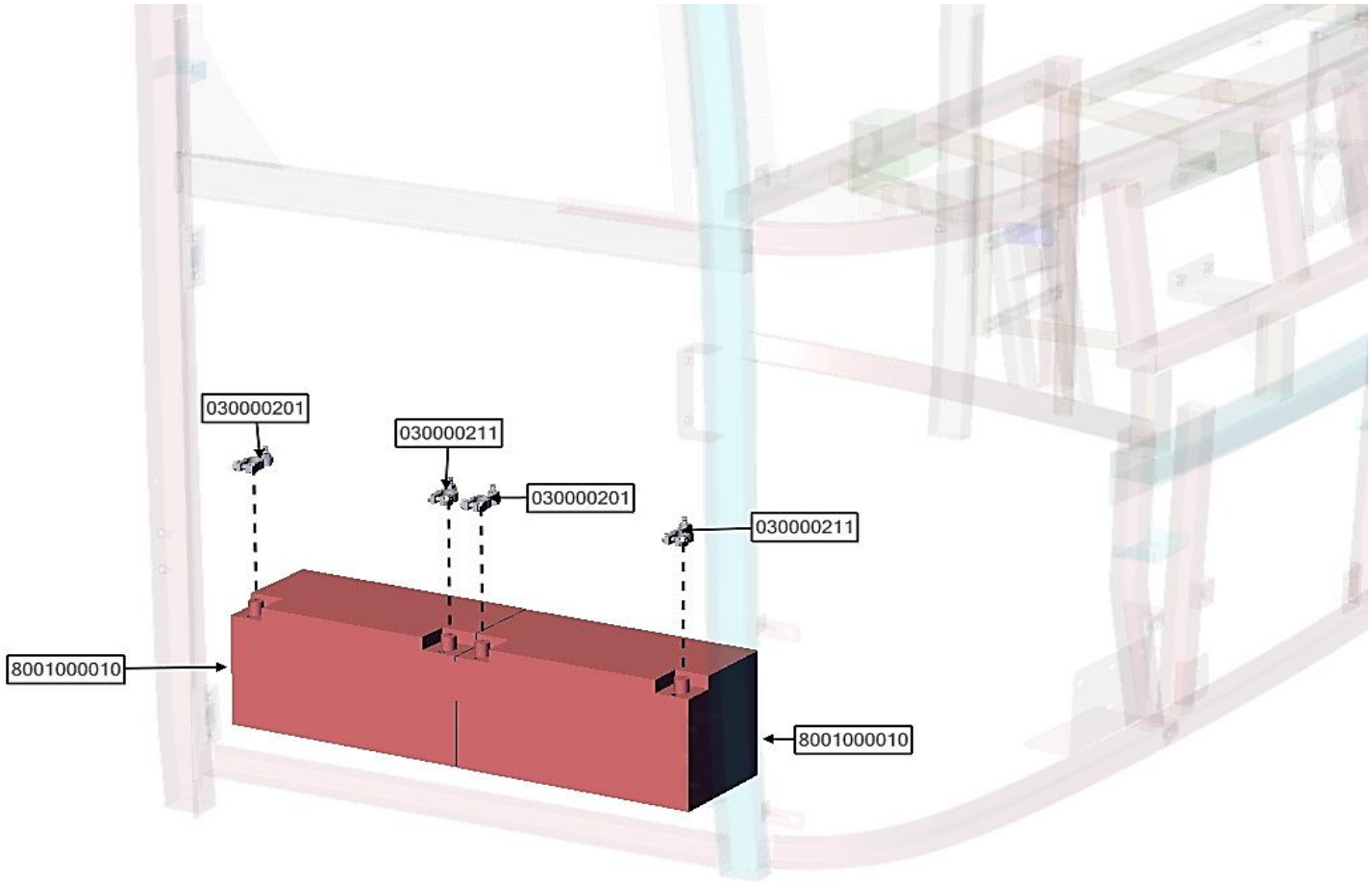

ASSB_NAME	PART NO.	NAME	QTY
ELECTRICAL BOX	30000201	BATTERY CLAMP N	2
	30000211	BATTERY CLAMP P	2
	8001000010	BATTERY	2

ASSB_NAME	PART NO.	NAME	QTY
ELECTRICAL BOX			

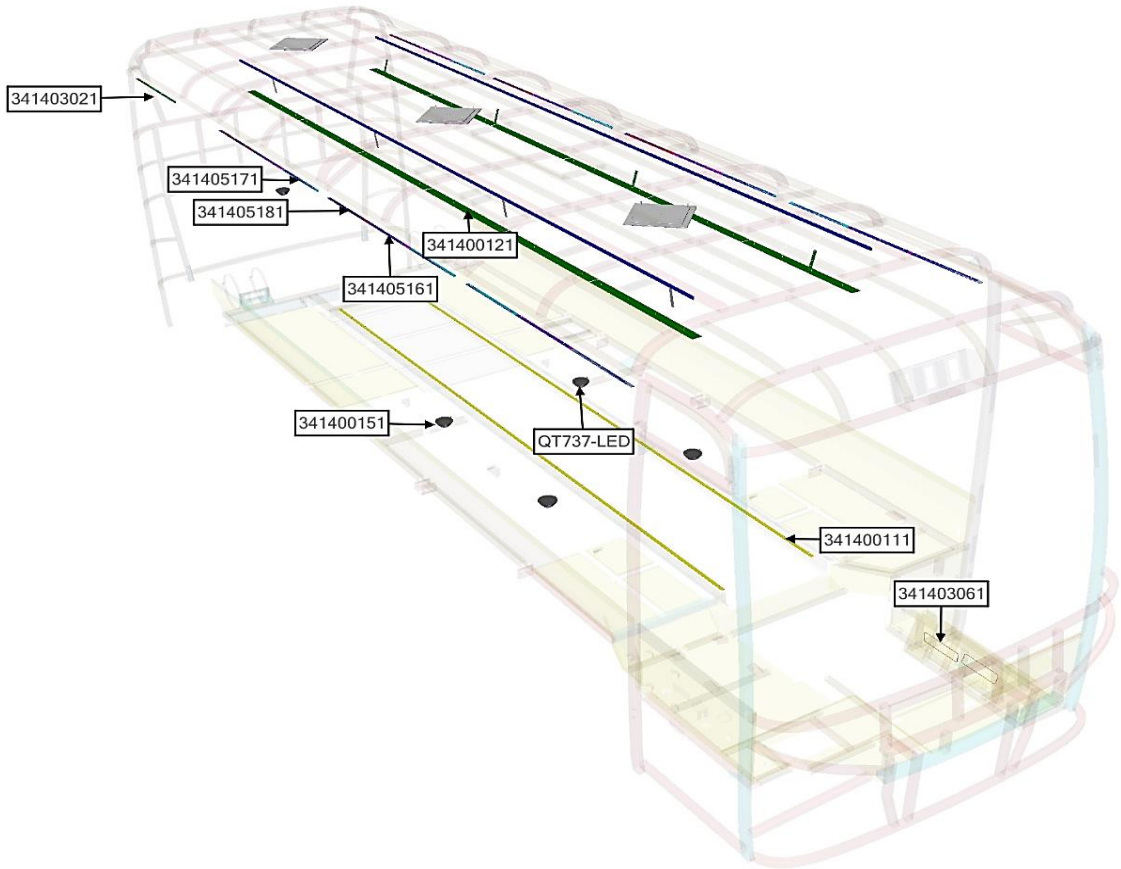

ASSB_NAME	PART NO.	NAME	QTY
LIGHTING SYSTEM	341403061	WATERPROOF LED 1,5M	2
	341400151	LUGGAGES RACK LED 20x110 (BLUE)	8
	QT737-LED	LUGGAGES TRUNK LIGHTS	5
	341400121	LUGGAGES RACK LED 54x850	12
	341400111	LED CIRCULT 20x450 (WHITE)	20
	341403021	LED CIRCULT 20x450 (BLUE)	21

ASSB_NAME	PART NO.	NAME	QTY
LIGHTING SYSTEM	341405161	CURTAIN LED 20X480 (MALE THREAD COMBS-CONNETOR)	8
	341405171	CURTAIN LED 20X480 (FEMALE THREAD COMBS-CONNETOR)	5
	341405181	CURTAIN LED 20X480 (POWER-FEMALE THREAD COMBS)	2

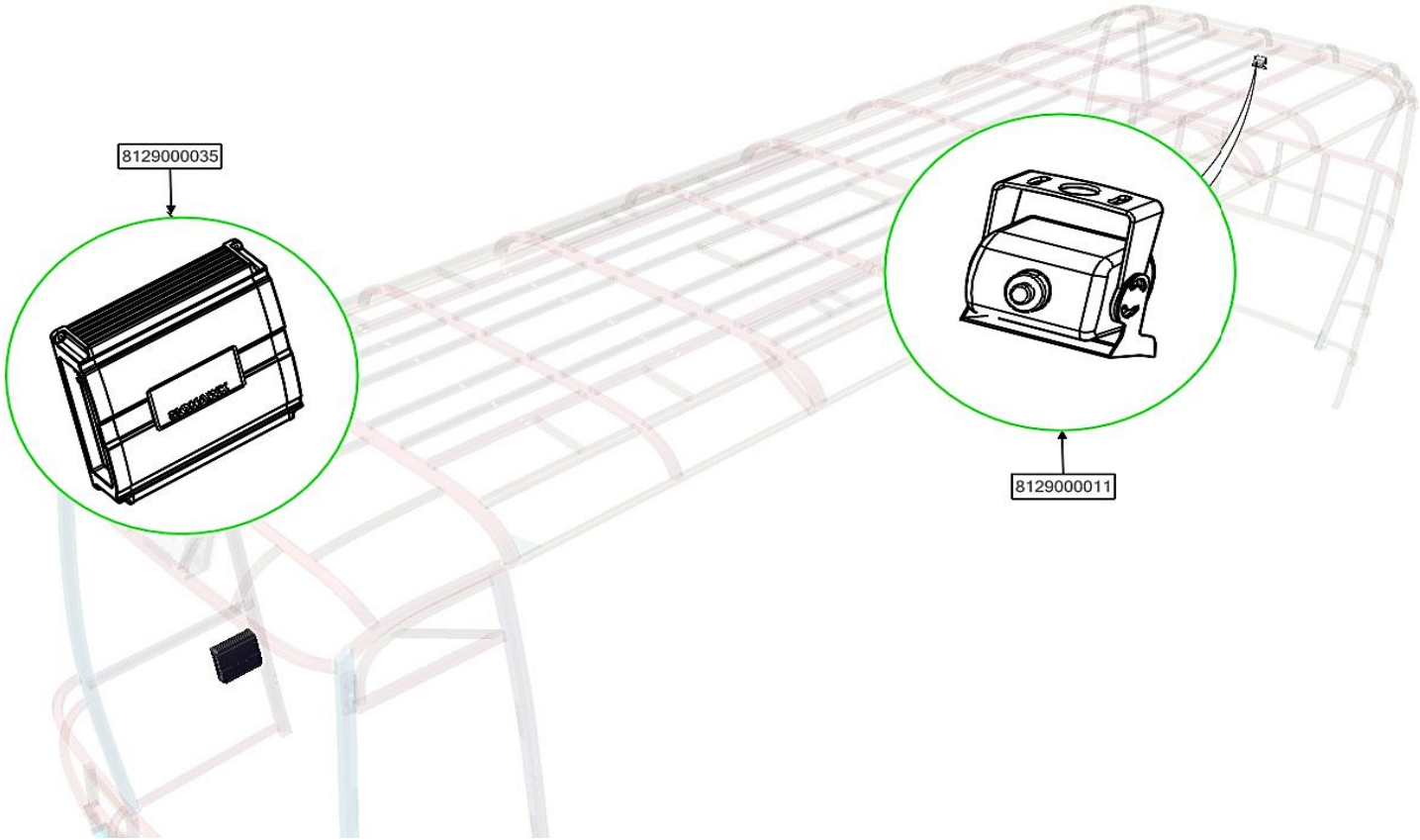

ASSB_NAME	PART NO.	NAME	QTY
SOUND AND IMAGE SYSTEM	8129000011	CAMERA	1
	8129000035	AMPLIFIER	1

ASSB_NAME	PART NO.	NAME	QTY
SOUND AND IMAGE SYSTEM			

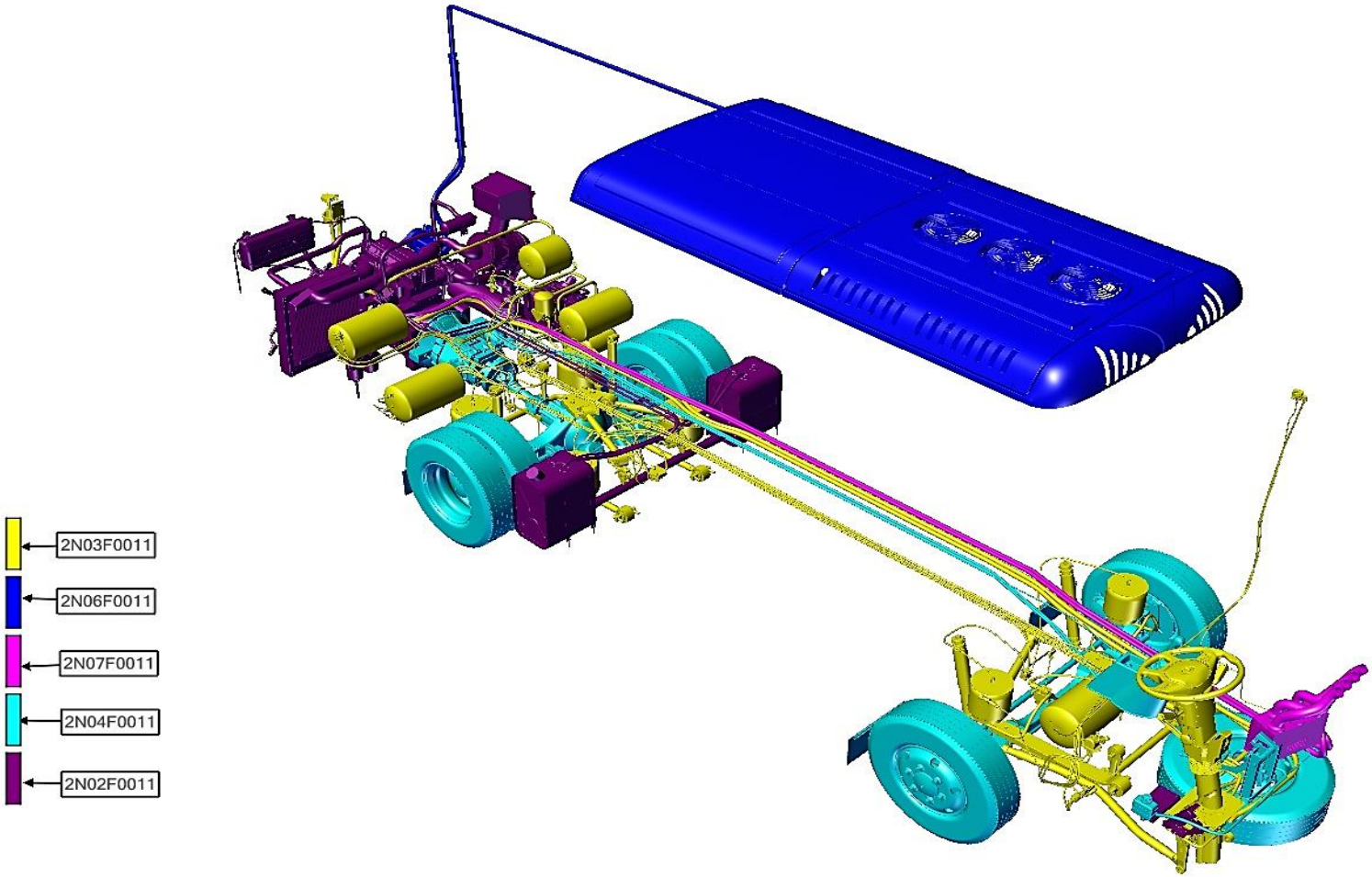

ASSB_NAME	PART NO.	NAME	QTY
BARE CHASSIS	2N02F0011	DIESEL ENGINE ASSY	1
	2N06F0011	AIR CONDITIONING SYSTEM	1
	2N04F0011	POWERTRAIN	1
	2N07F0011	GLASS HEATING SYSTEM	1
	2N03F0011	CHASSIS FUNCTION SYSTEM	1

ASSB_NAME	PART NO.	NAME	QTY
BARE CHASSIS			

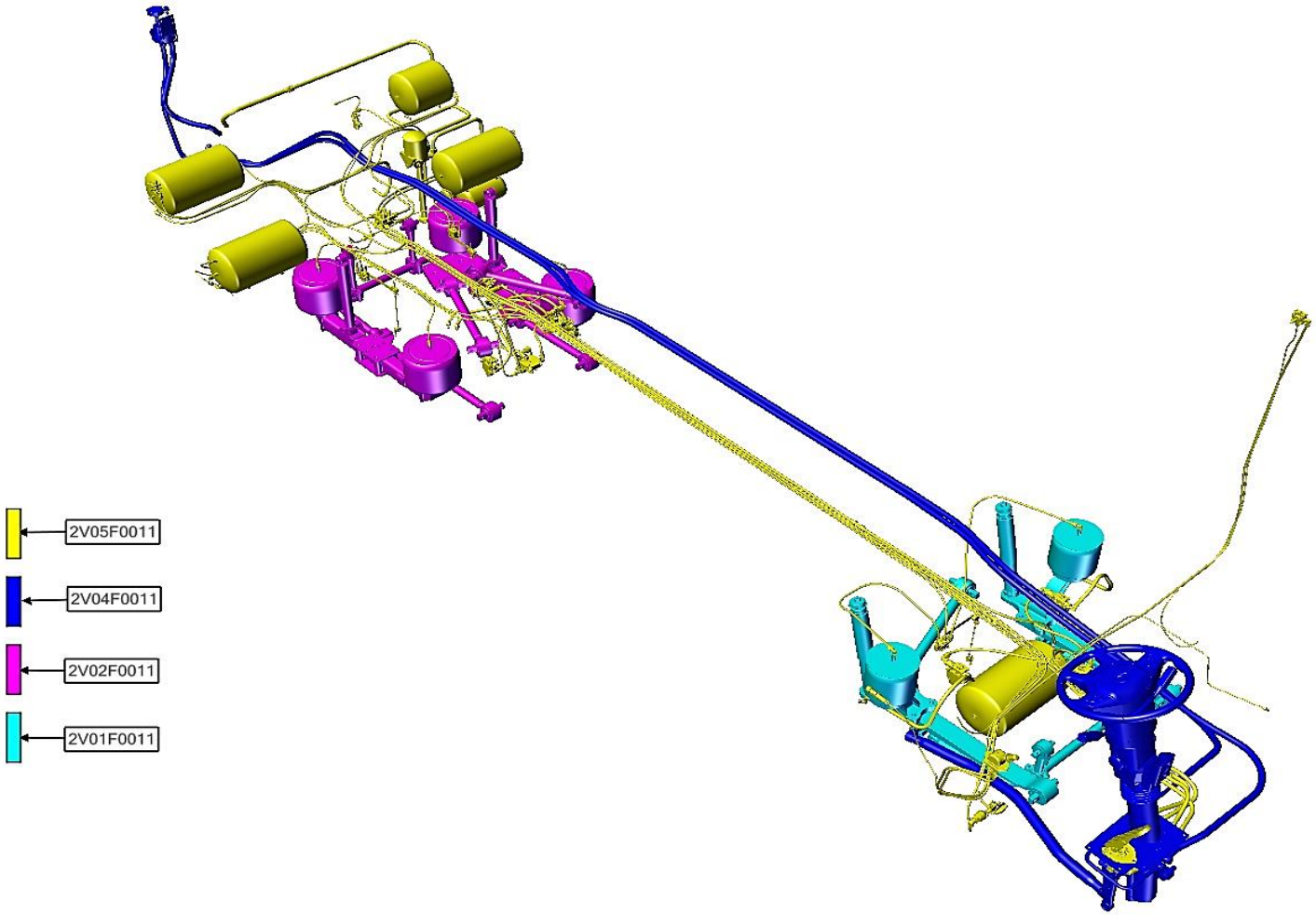

ASSB_NAME	PART NO.	NAME	QTY
CHASSIS FUNCTION SYSTEM	2V01F0011	FRONT SUSPENSION SYSTEM	1
	2V02F0011	REAR SUSPENSION SYSTEM	1
	2V04F0011	STEERING SYSTEM	1
	2V05F0011	AIR COMPRESION SYSTEM	1

ASSB_NAME	PART NO.	NAME	QTY
CHASSIS FUNCTION SYSTEM			

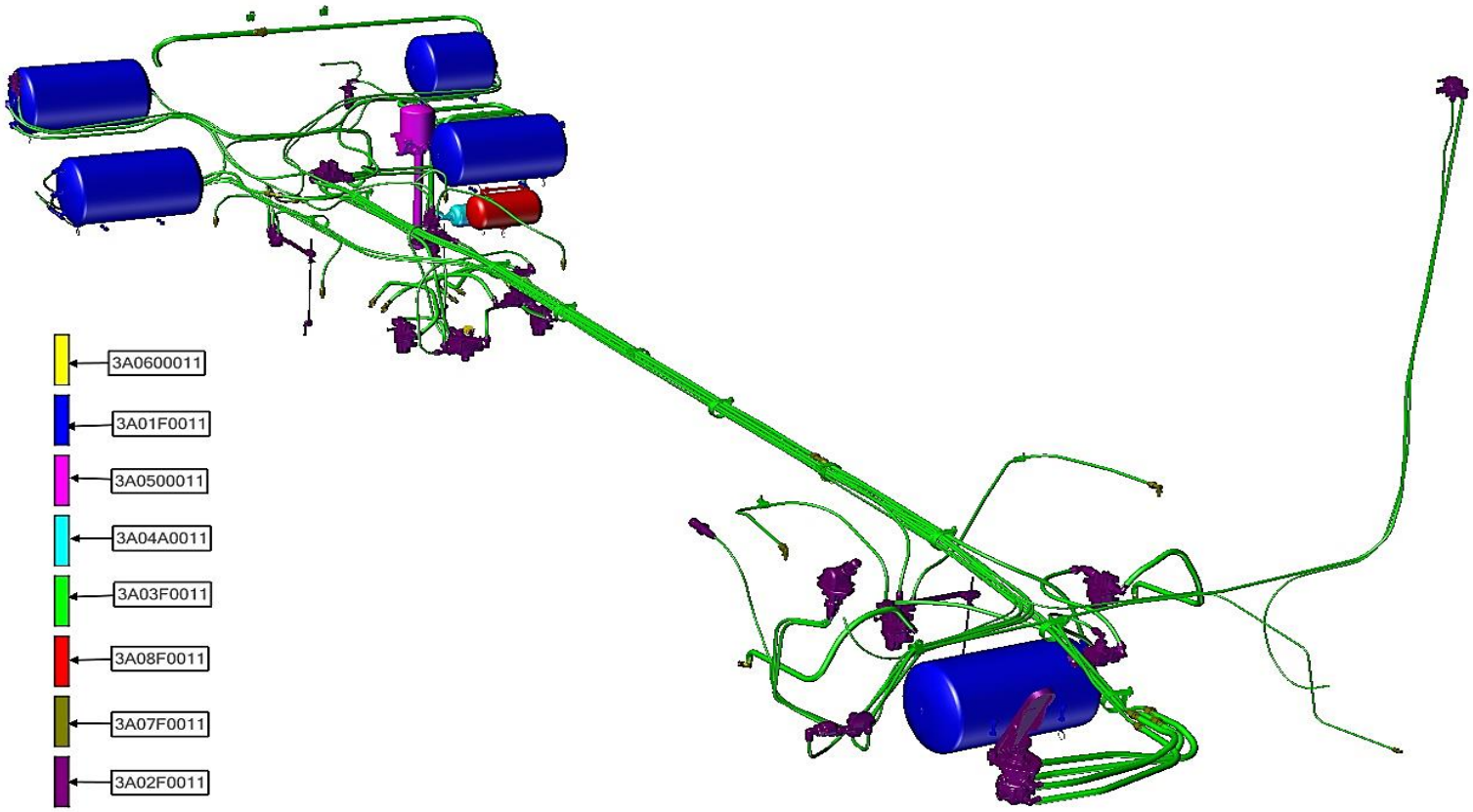

ASSB_NAME	PART NO.	NAME	QTY
AIR COMPRESION SYSTEM	3A03F0011	AIR PIPING	1
	3A02F0011	AIR VALVE	1
	3A07F0011	CONNECTOR SYSTEM	1
	3A08F0011	PURGE TANK ASSY	1
	3A0500011	DRYER ASSY	1
	3A04A0011	WATER EXHAUST TANK ASSY	1
	3A01F0011	AIR TANK ASSY	1

ASSB_NAME	PART NO.	NAME	QTY
AIR COMPRESION SYSTEM	3A0600011	SENSOR	1

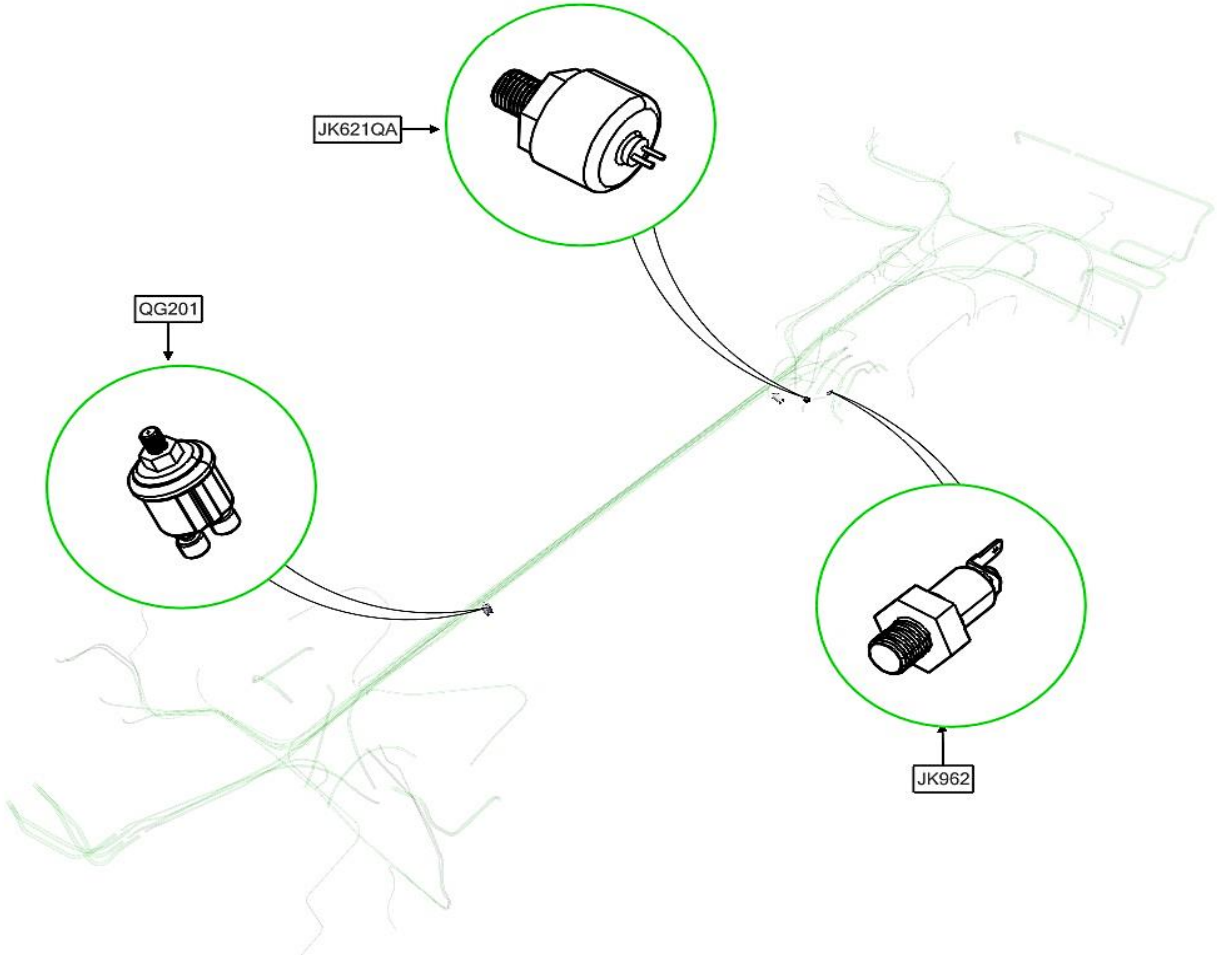

ASSB_NAME	PART NO.	NAME	QTY
SENSOR	QG201	PRESSURE SENSOR	2
	JK621QA	STOP SENSOR	1
	JK962	ACTUATOR SENSOR	1

ASSB_NAME	PART NO.	NAME	QTY
SENSOR			

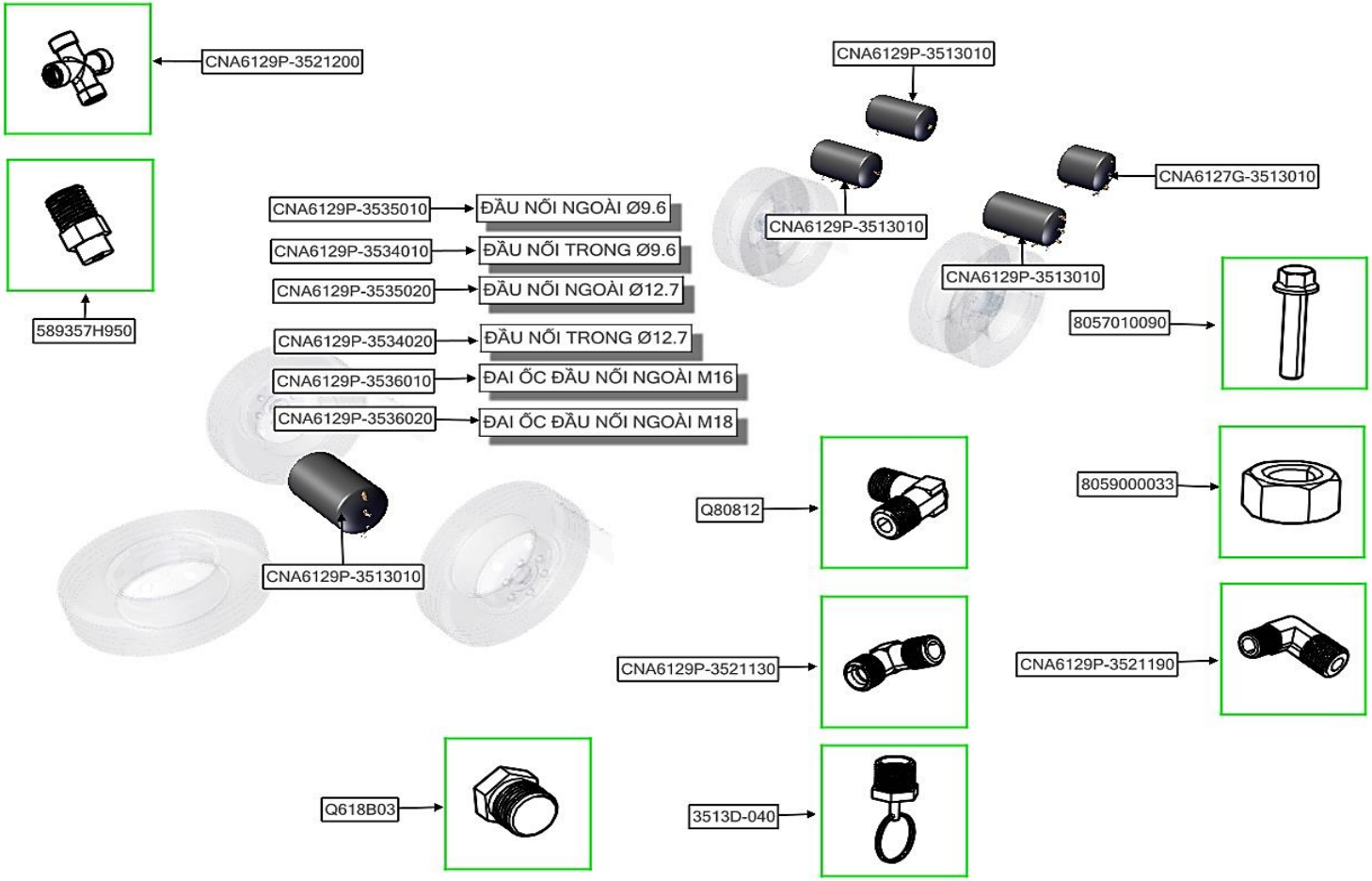

ASSB_NAME	PART NO.	NAME	QTY
AIR TANK ASSY	8057010090	BOLT 10045125	1
	CNA6127G-3513010	AIR TANK 20L	1
	CNA6129P-3513010	AIR TANK 30L	4
	Q618B03	NUT Z3/8	1
	CNA6129P-3521200	CONNECTOR Z1/4	1
	Q80812	CONNECTOR M18-Z3/8	1
	CNA6129P-3521130	CONNECTOR Z3/8-M16	1

ASSB_NAME	PART NO.	NAME	QTY
AIR TANK ASSY	CNA6129P-3521190	CONNECTOR Z3/8-Z1/4	1
	589357H950	CONNECTOR	3
	3513D-040	DRAIN VALVE	1
	8059000033	NUT 10125	1
	CNA6129P-3536010	NUT M16	1
	CNA6129P-3536020	NUT M18	1
	CNA6129P-3535010	OUTER CONNECTOR Ø9.6	1

ASSB_NAME	PART NO.	NAME	QTY
AIR TANK ASSY	CNA6129P-3535020	OUTER CONNECTOR Ø9.6	1
	CNA6129P-3534010	INNER CONNECTOR Ø9.6	1
	CNA6129P-3534020	INNER CONNECTOR Ø12.7	1

ASSB_NAME	PART NO.	NAME	QTY
AIR TANK ASSY			

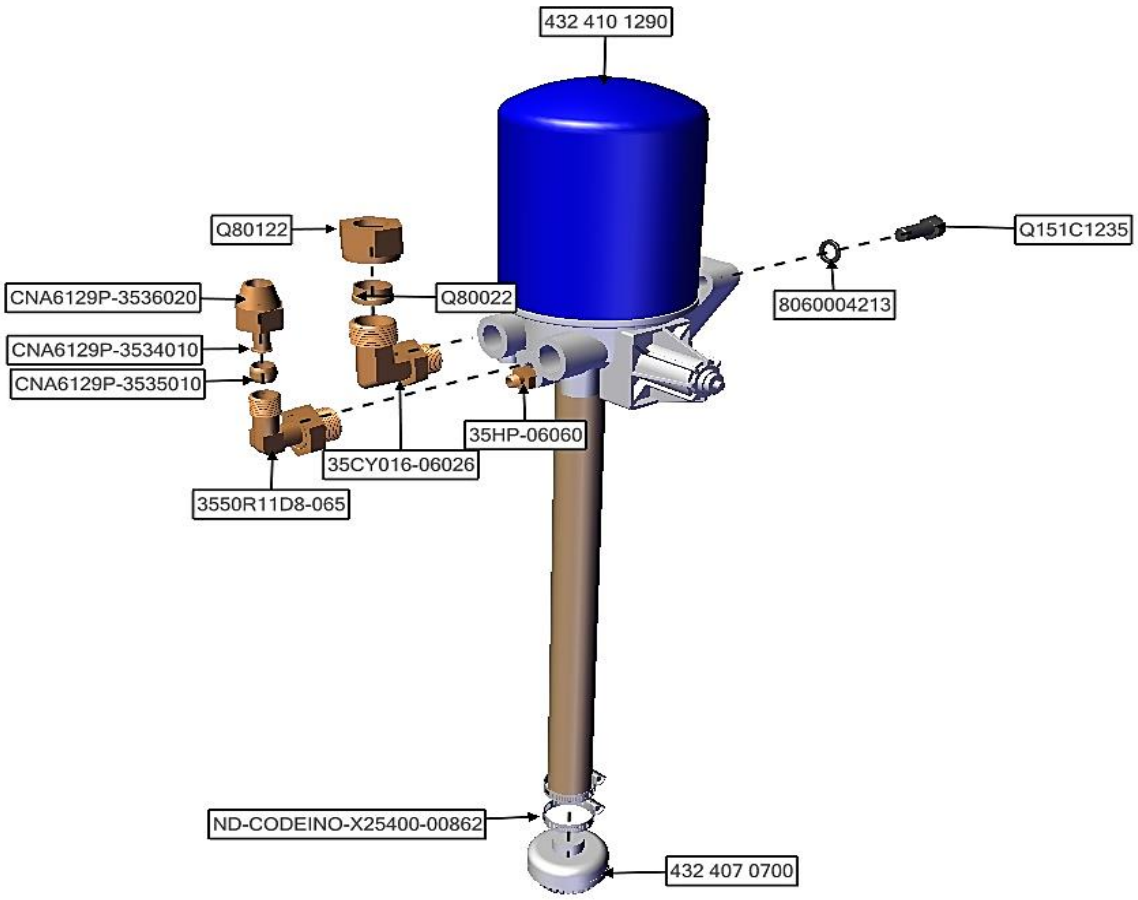

ASSB_NAME	PART NO.	NAME	QTY
DRYER ASSY	ND-VTPHU00-SUVA25-00131	AIR DRYER EXHAUST PIPE	1
	8060004213	SPLIT WASHER Ø12	3
	CNA6129P-3534010	INNER CONNECTOR Ø12.7	1
	Q80022	OUTER CONNECTOR Ø22	1
	CNA6129P-3535010	OUTER CONNECTOR Ø9.6	1
	Q80122	NUT M30	1
	CNA6129P-3536020	NUT M18	1

ASSB_NAME	PART NO.	NAME	QTY
DRYER ASSY	ND-CODEINO-X25400-00862	CLAMP 25-40	2
	432 407 0700	DRAIN VALVE	1
	35HP-06060	CONNECTOR M12-Z1/8	1
	35CY016-06026	CONNECTOR M30-M22	1
	3550R11D8-065	CONNECTOR M22-M18	1
	432 410 1290	AIR DRYER	1
	Q151C1235	BOLT 12035150	3

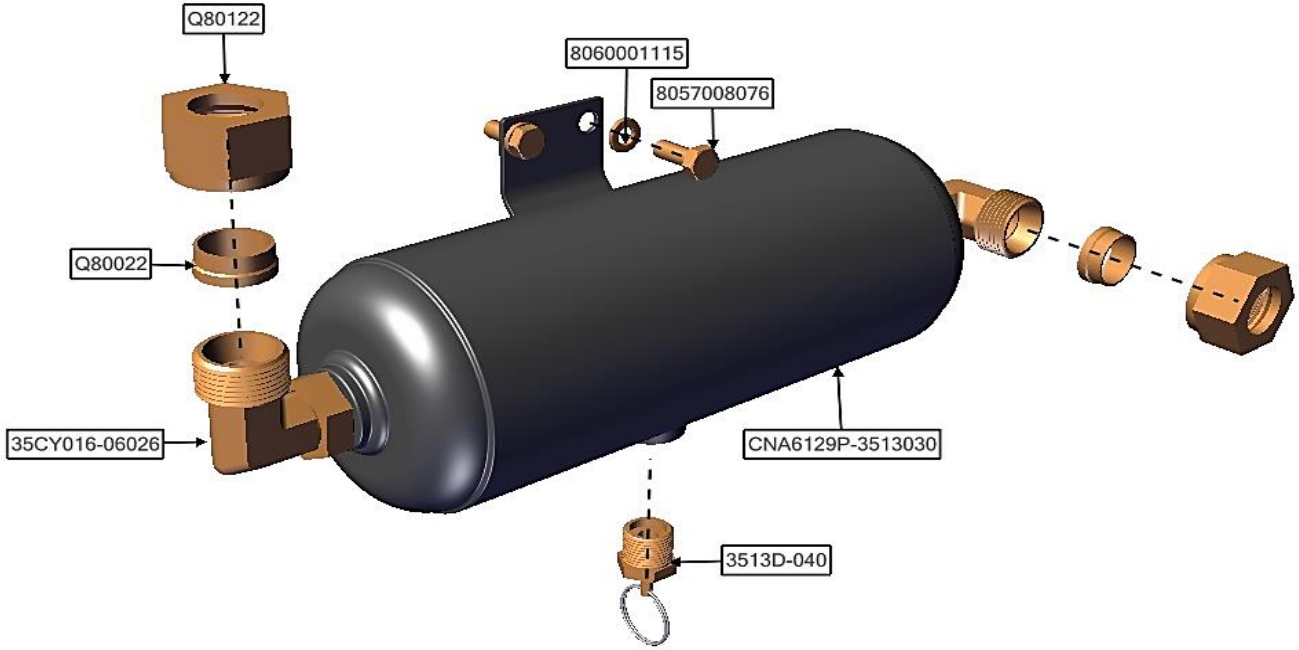

ASSB_NAME	PART NO.	NAME	QTY
WATER EXHAUST TANK ASSY	Q80022	OUTER CONNECTOR Ø22	2
	Q80122	NUT M30	2
	8060001115	WASHER Ø08	2
	3513D-040	DRAIN VALVE	1
	35CY016-06026	CONNECTOR M30-M22	2
	CNA6129P-3513030	WATER EXHAUST TANK	1
	8057008076	BOLT 08020125	2

ASSB_NAME	PART NO.	NAME	QTY
WATER EXHAUST TANK ASSY			

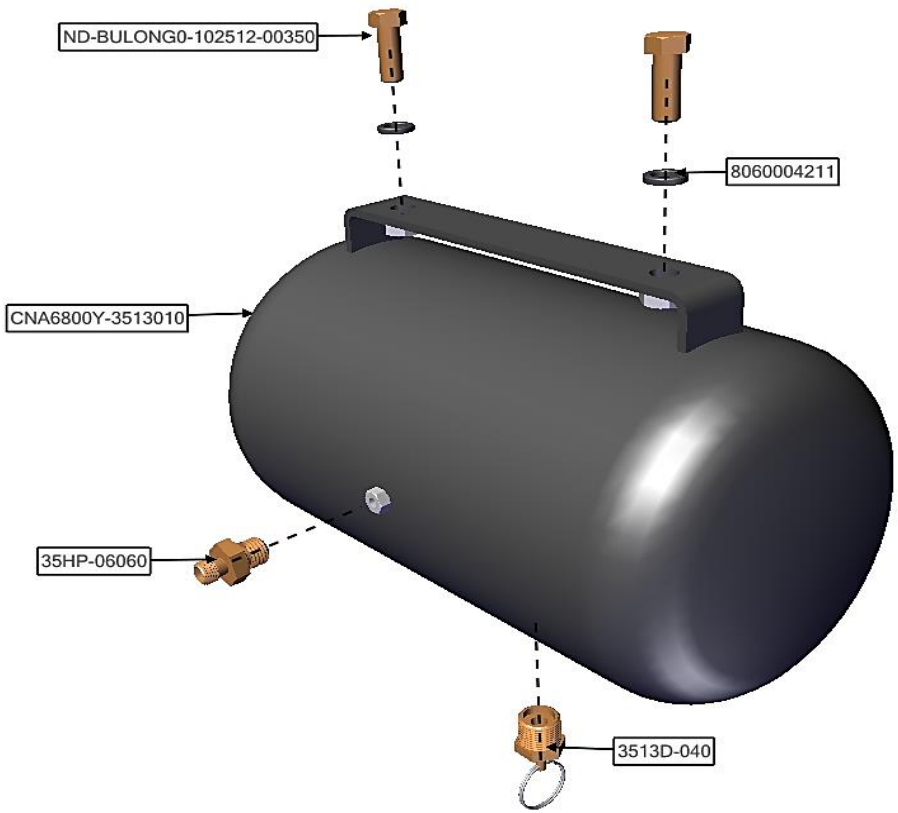

ASSB_NAME	PART NO.	NAME	QTY
PURGE TANK ASSY	8060004211	SPLIT WASHER Ø10	2
	3513D-040	DRAIN VALVE	1
	35HP-06060	CONNECTOR M12-Z1/8	1
	CNA6800Y-3513010	MUFFLER TANK	1
	ND-BULONG0-102512-00350	BOLT 10045125	2

ASSB_NAME	PART NO.	NAME	QTY
PURGE TANK ASSY			

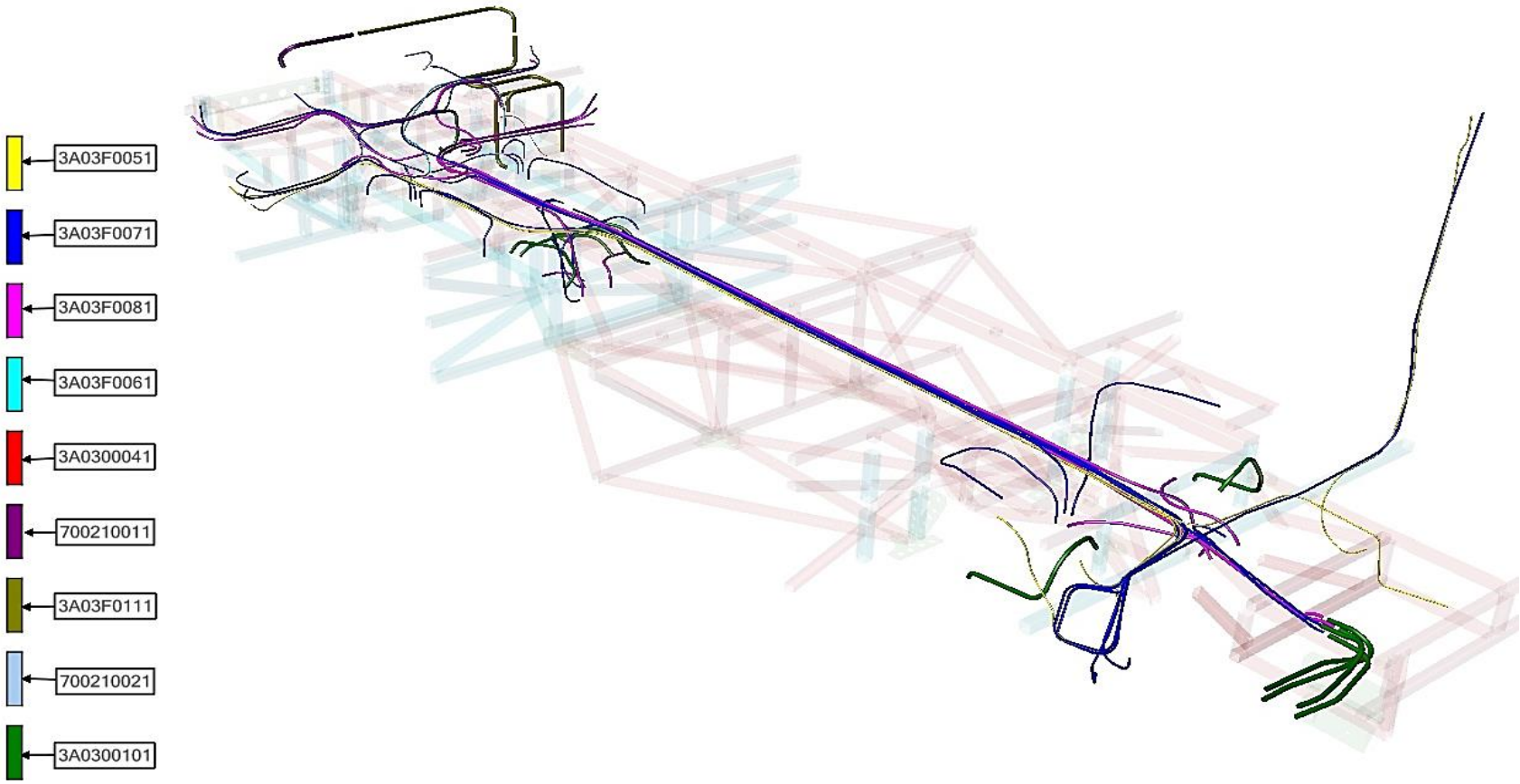

ASSB_NAME	PART NO.	NAME	QTY
AIR PIPING	3A03F0111	COPPER PIPE Ø22	1
	3A0300101	SPRING HYDRAULIC PIPE	1
	700210021	GRID PIPE	1
	700210011	GRID PIPE	1
	3A0300041	AIR PIPE 4	1
	3A03F0061	AIR PIPE 8	1
	3A03F0081	AIR PIPE 12.7	1

ASSB_NAME	PART NO.	NAME	QTY
AIR PIPING	3A03F0071	AIR PIPE 9.6	1
	3A03F0051	AIR PIPE 6.3	1

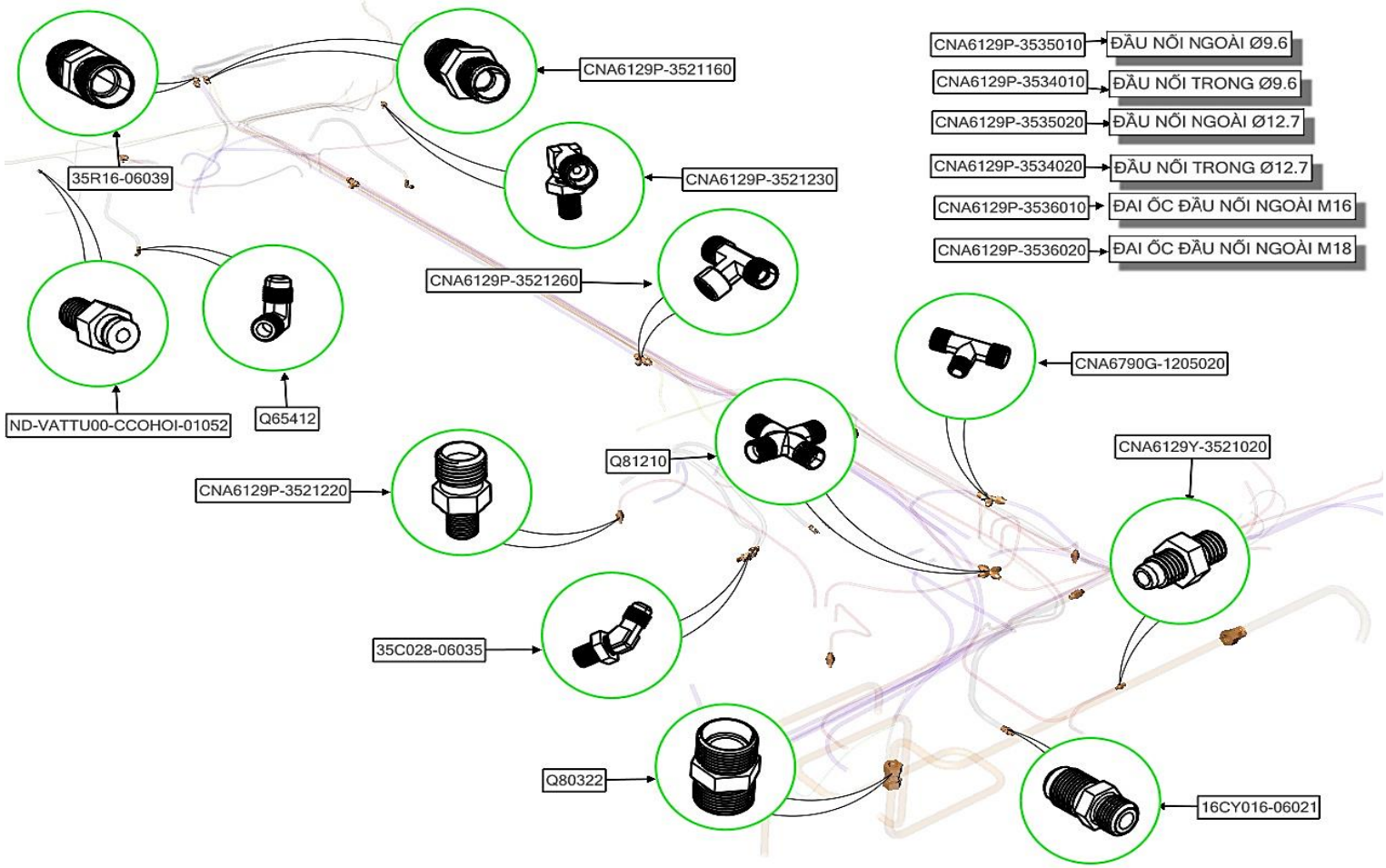

CỤM	MÃ SỐ	TÊN LINH KIỆN	SL
CONNECTOR SYSTEM	CNA6790G-1205020	CONNECTOR 3 M18-M18-M14	1
	CNA6129P-3521260	CONNECTOR3 M18-M18-Z1/4	2
	Q81210	CONNECTOR M16	1
	CNA6129P-3521230	CONNECTOR M16-M10	2
	35C028-06035	CONNECTOR M18-M16	4
	Q65412	CONNECTOR M18-Z3/8	2
	CNA6129Y-3521020	CONNECTOR M10-M10	1

CỤM	MÃ SỐ	TÊN LINH KIỆN	SL
CONNECTOR SYSTEM	CNA6129P-3521220	CONNECTOR M16-M10	4
	CNA6129P-3521160	CONNECTOR M18-M16	3
	16CY016-06021	CONNECTOR M18-M16	1
	35R16-06039	CONNECTOR M18-M18	2
	Q80322	CONNECTOR M30-M30	2
	ND-VATTU00-CCOHOI-01052	CONNECTOR	1
	CNA6129P-3536010	NUT M16	1

ASSB_NAME	PART NO.	NAME	QTY
CONNECTOR SYSTEM	CNA6129P-3536020	NUT M18	1
	CNA6129P-3535010	OUTER CONNECTOR Ø9.6	1
	CNA6129P-3535020	OUTER CONNECTOR Ø9.6	1
	CNA6129P-3534010	INNER CONNECTOR Ø9.6	1
	CNA6129P-3534020	INNER CONNECTOR Ø12.7	1

ASSB_NAME	PART NO.	NAME	QTY
CONNECTOR SYSTEM			

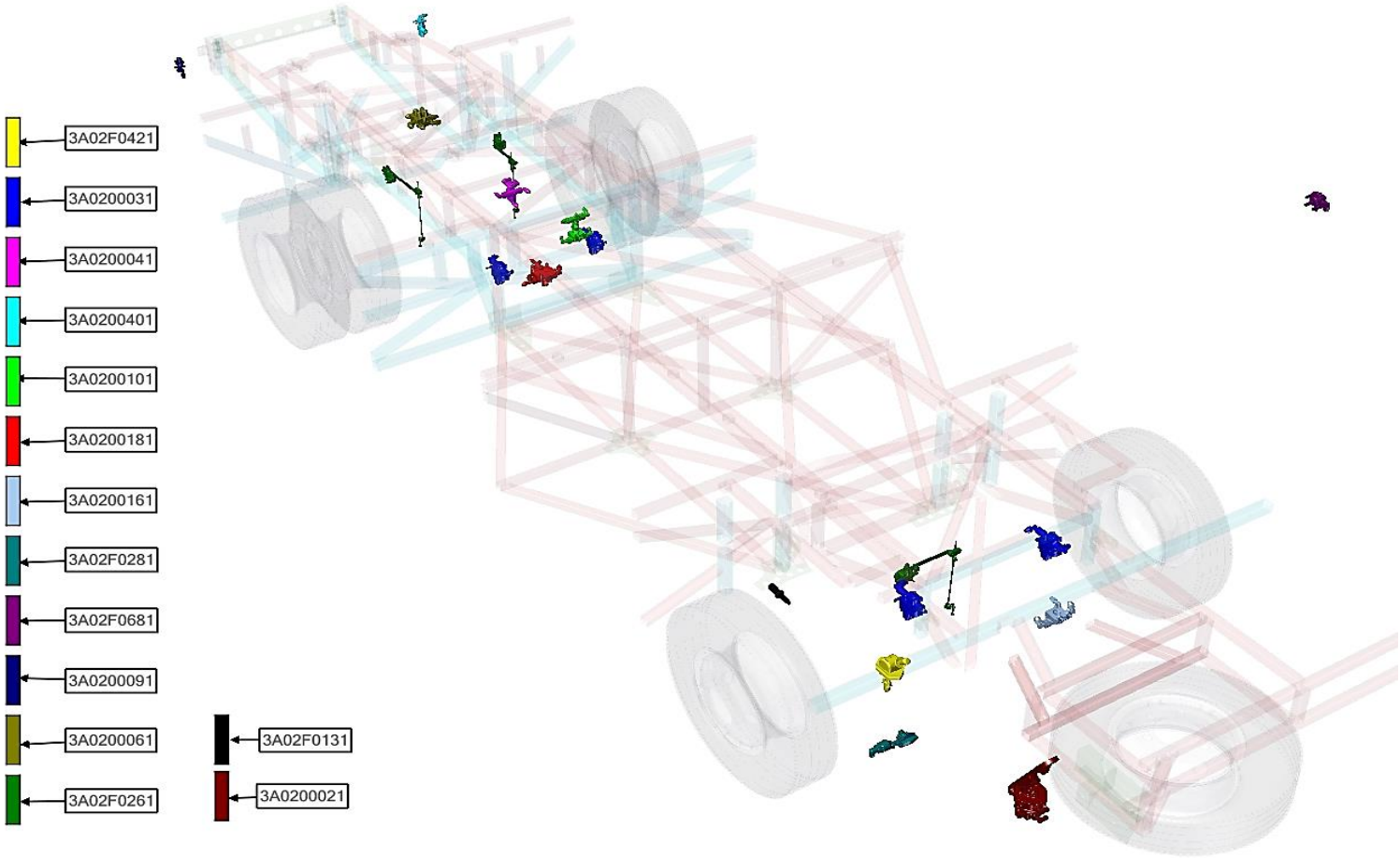

ASSB_NAME	PART NO.	NAME	QTY
AIR VALVE	3A02F0421	PARKING BRAKE SHAFT ASSY	1
	3A0200031	ABS VALVE ASSY	1
	3A0200041	ASR VAVLE ASSY	1
	3A0200101	DISTRIBUTOR VALVE ASSY	1
	3A0200181	REAR DISTRIBUTOR VALVE ASSY	1
	3A0200161	FRONT DISTRIBUTOR VALVE ASSY	1
	3A0200401	EXHAUST VALVE ASSY	1

ASSB_NAME	PART NO.	NAME	QTY
AIR VALVE			

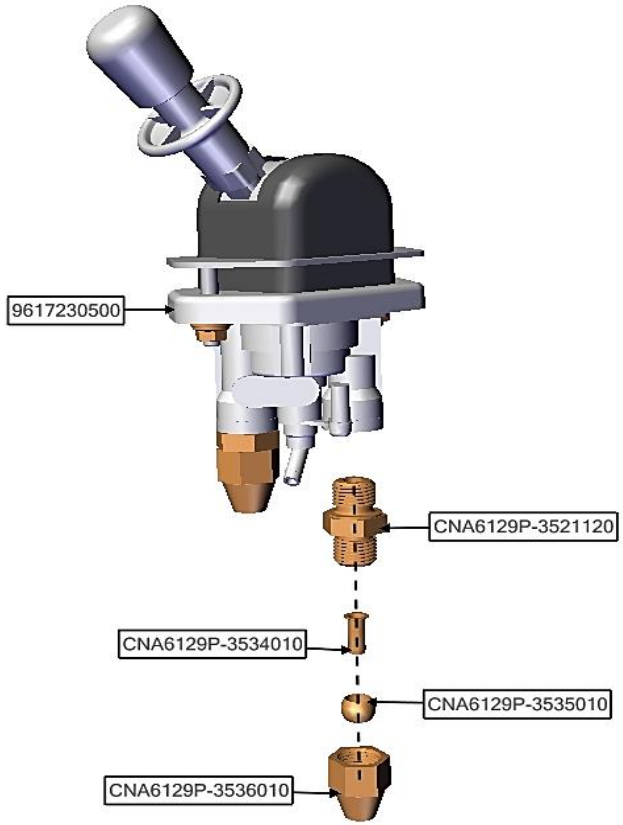

ASSB_NAME	PART NO.	NAME	QTY
PARKING BRAKE SHAFT ASSY	CNA6129P-3534010	INNER CONNECTOR Ø9.6	1
	CNA6129P-3535010	OUTER CONNECTOR Ø9.6	1
	CNA6129P-3536010	NUT M16	1
	CNA6129P-3521120	CONNECTOR M16-M16	1
	9617230500	PARKING BRAKE SHAFT	1

ASSB_NAME	PART NO.	NAME	QTY
PARKING BRAKE SHAFT ASSY			

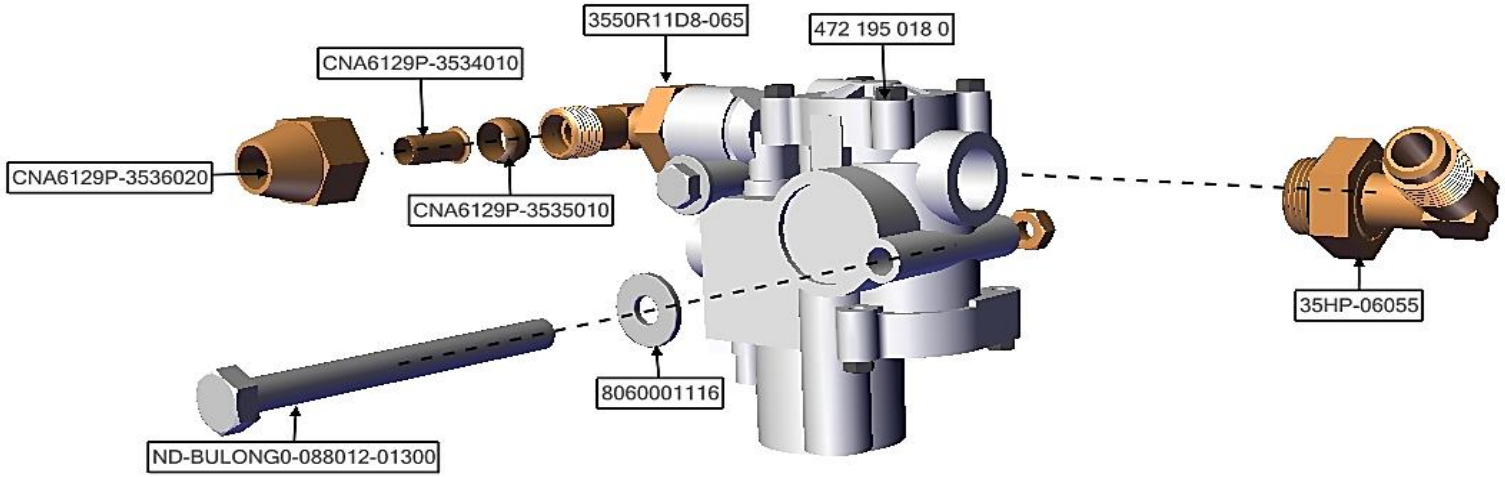

ASSB_NAME	PART NO.	NAME	QTY
ABS VALVE ASSY	CNA6129P-3534010	INNER CONNECTOR Ø12.7	1
	CNA6129P-3535010	OUTER CONNECTOR Ø9.6	1
	CNA6129P-3536020	NUT M18	1
	8060001116	WASHER Ø08	2
	472 195 018 0	ABS VALVE	1
	35HP-06055	CONNECTOR M22-M18	1
	3550R11D8-065	CONNECTOR M22-M18	1

ASSB_NAME	PART NO.	NAME	QTY
ABS VALVE ASSY	ND-BULONG0-088012-01300	BU LÔNG 08080125	1

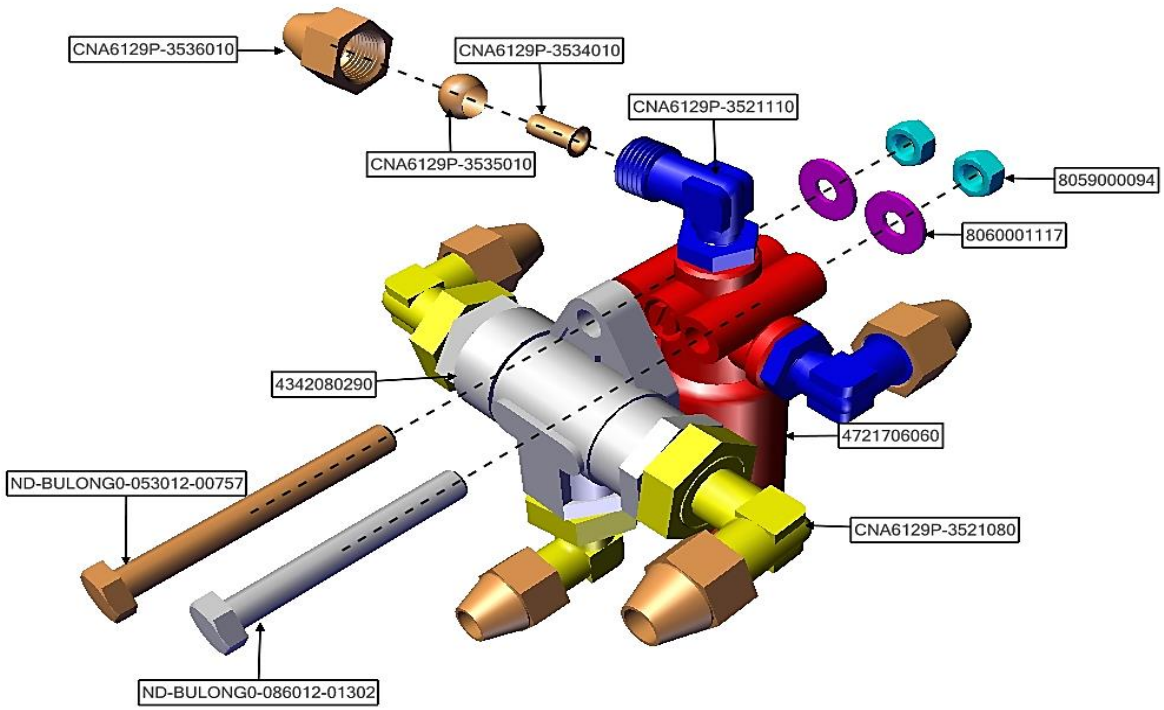

ASSB_NAME	PART NO.	NAME	QTY
ASR VAVLE ASSY	CNA6129P-3534010	INNER CONNECTOR Ø9.6	1
	CNA6129P-3535010	OUTER CONNECTOR Ø9.6	1
	CNA6129P-3536010	NUT M16	1
	8059000094	NUT 08125	2
	8060001117	WASHER Ø08	2
	4721706060	ASR VALVE	1
	4342080290	JUCTION VALVE	1

ASSB_NAME	PART NO.	NAME	QTY
ASR VAVLE ASSY	CNA6129P-3521080	CONNECTOR M22-M16	3
	CNA6129P-3521110	CONNECTOR M16-M12	2
	ND-BULONG0-053012-00757	BOLT 08070125	1
	ND-BULONG0-086012-01302	BOLT 08060125	1

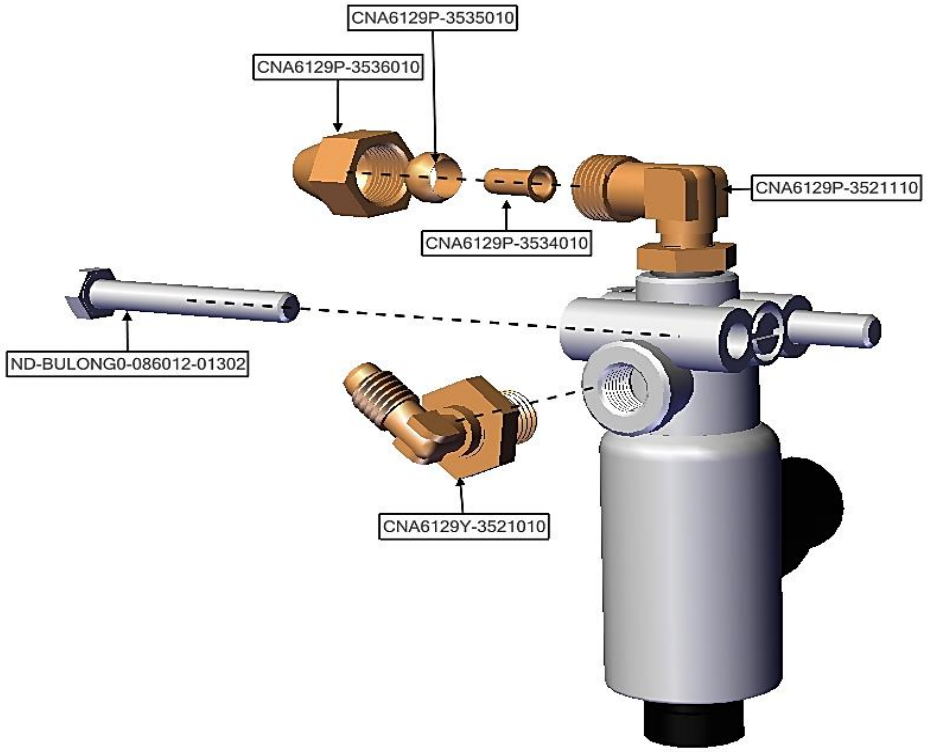

ASSB_NAME	PART NO.	NAME	QTY
EXHAUST VALVE ASSY	CNA6129P-3534010	INNER CONNECTOR Ø9.6	1
	CNA6129P-3535010	OUTER CONNECTOR Ø9.6	1
	CNA6129P-3536010	NUT M16	1
	CNA6129P-3521110	CONNECTOR M16-M12	1
	CNA6129Y-3521010	CONNECTOR M12-M10	1
	ND-BULONG0-086012-01302	BOLT 08060125	2

ASSB_NAME	PART NO.	NAME	QTY
EXHAUST VALVE ASSY			

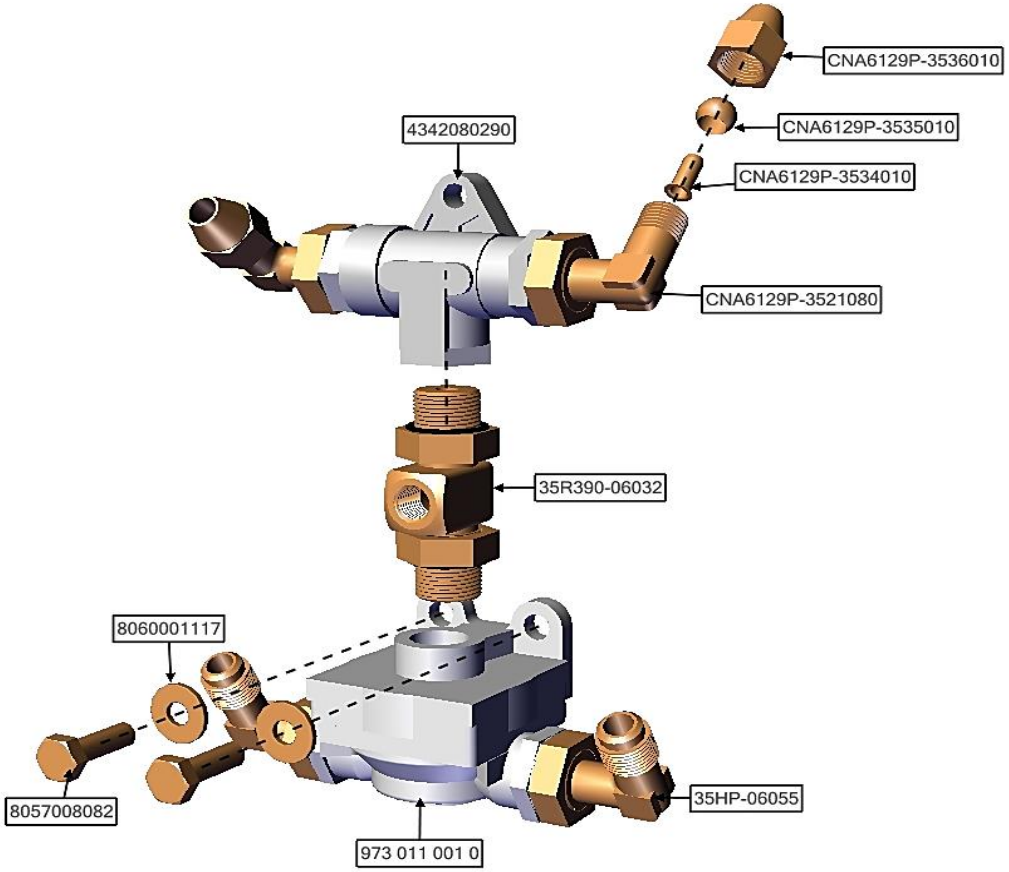

ASSB_NAME	PART NO.	NAME	QTY
DISTRIBUTOR VALVE ASSY	CNA6129P-3534010	INNER CONNECTOR Ø9.6	1
	CNA6129P-3535010	OUTER CONNECTOR Ø9.6	1
	CNA6129P-3536010	NUT M16	1
	8060001117	WASHER Ø08	2
	973 011 001 0	DRAIN VALVE	1
	4342080290	JUCTION VALVE	1
	35HP-06055	CONNECTOR M22-M18	2

ASSB_NAME	PART NO.	NAME	QTY
DISTRIBUTOR VALVE ASSY	CNA6129P-3521080	CONNECTOR M22-M16	2
	35R390-06032	CONNECTOR M22-M22-Z1/8	1
	8057008082	BOLT 08025125	2

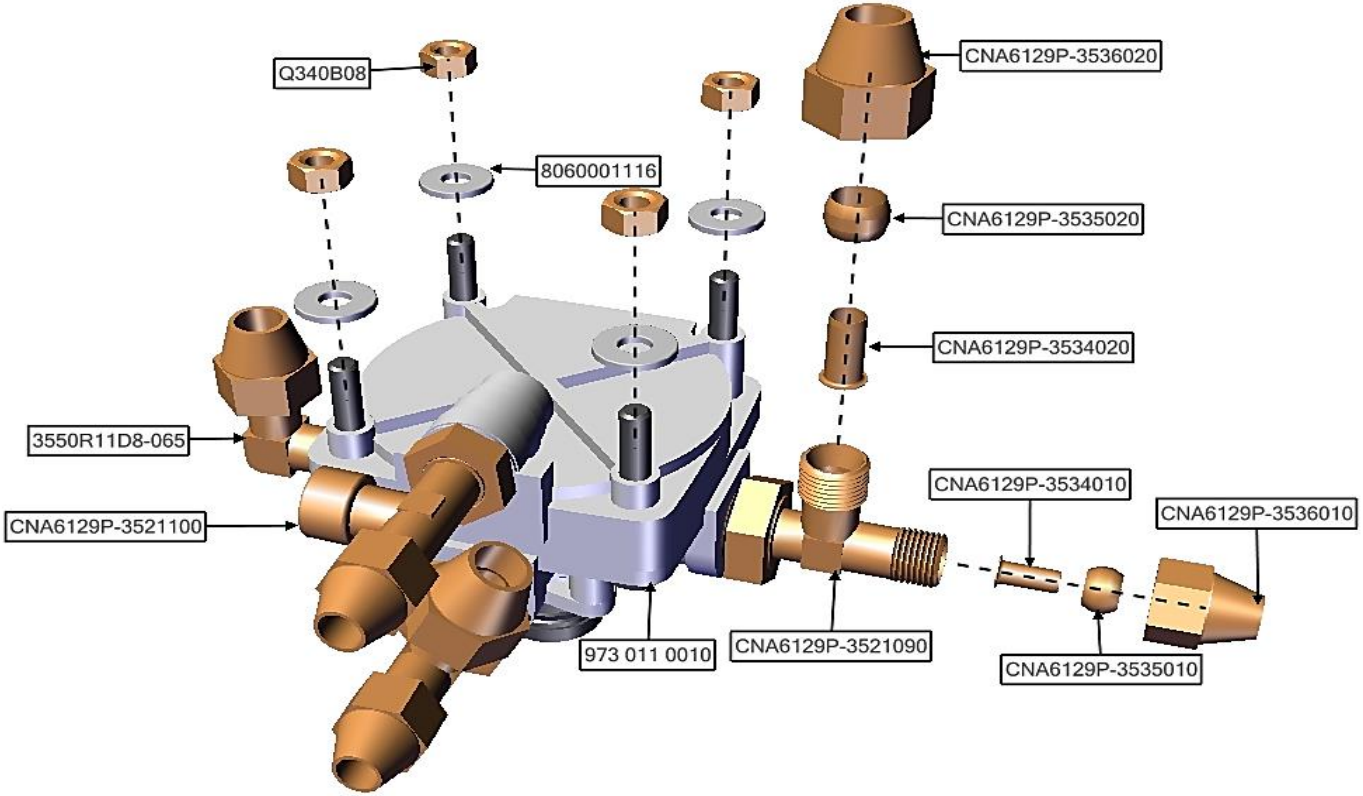

ASSB_NAME	PART NO.	NAME	QTY
REAR DISTRIBUTOR VALVE ASSY	CNA6129P-3534020	INNER CONNECTOR Ø12.7	1
	CNA6129P-3534010	INNER CONNECTOR Ø9.6	1
	CNA6129P-3535020	OUTER CONNECTOR Ø9.6	1
	CNA6129P-3535010	OUTER CONNECTOR Ø9.6	1
	CNA6129P-3536020	NUT M18	1
	CNA6129P-3536010	NUT M16	1
	CNA6129P-3536010	NUT M16	1

ASSB_NAME	PART NO.	NAME	QTY
REAR DISTRIBUTOR VALVE ASSY	Q340B08	NUT 08125	4
	8060001116	WASHER Ø08	4
	973 011 0010	QUICK RELEASE VALVE	1
	3550R11D8-065	CONNECTOR M22-M18	1
	CNA6129P-3521090	CONNECTOR M22-M18-M16	2
	CNA6129P-3521100	CONNECTOR M16-M16-Z1/4	1

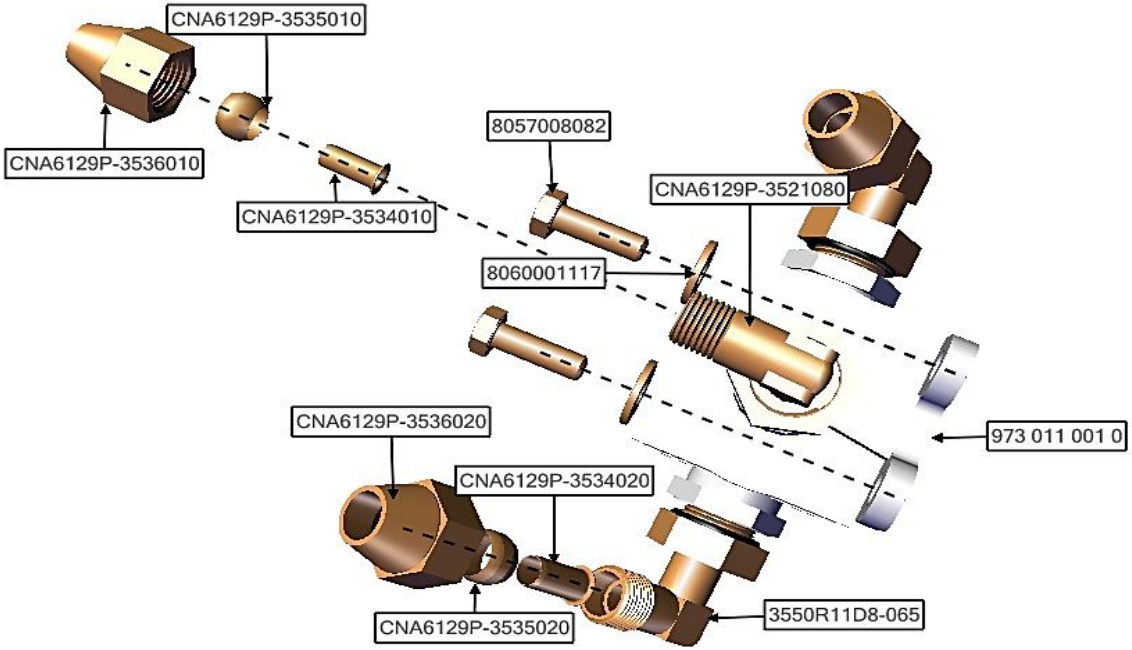

ASSB_NAME	PART NO.	NAME	QTY
FRONT DISTRIBUTOR VALVE ASSY	CNA6129P-3534020	INNER CONNECTOR Ø12.7	1
	CNA6129P-3534010	INNER CONNECTOR Ø9.6	1
	CNA6129P-3535020	OUTER CONNECTOR Ø9.6	1
	CNA6129P-3535010	OUTER CONNECTOR Ø9.6	1
	CNA6129P-3536020	NUT M18	1
	CNA6129P-3536010	NUT M16	1
	8060001117	WASHER Ø08	2

ASSB_NAME	PART NO.	NAME	QTY
FRONT DISTRIBUTOR VALVE ASSY	973 011 001 0	DRAIN VALVE	1
	3550R11D8-065	CONNECTOR M22-M18	2
	CNA6129P-3521080	CONNECTOR M22-M16	1
	8057008082	BOLT 08025125	2

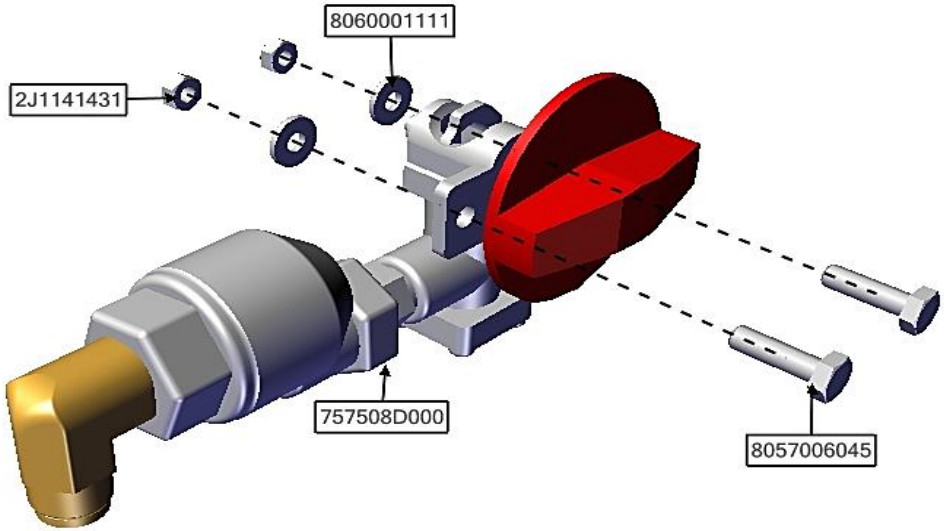

ASSB_NAME	PART NO.	NAME	QTY
DRIVER DOOR EMERGENCY VALVE ASSY	2J1141431	NUT 06100	2
	8060001111	WASHER Ø06	2
	757508D000	BELOW EMERGENCY VALVE	1
	8057006045	BOLT 06020100	2

ASSB_NAME	PART NO.	NAME	QTY
DRIVER DOOR EMERGENCY VALVE ASSY			

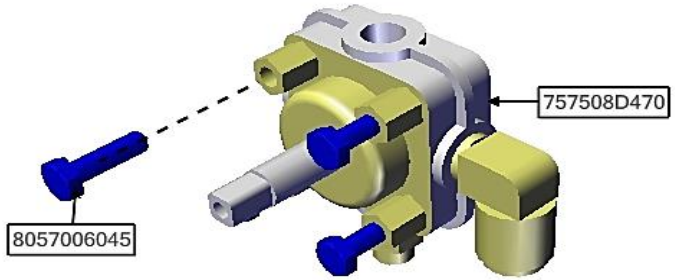

ASSB_NAME	PART NO.	NAME	QTY
EMERGENCY VALVE ASSY	757508D470	ABOVE EMERGENCY VALVE	1
	8057006045	BOLT 06020100	4

ASSB_NAME	PART NO.	NAME	QTY
EMERGENCY VALVE ASSY			

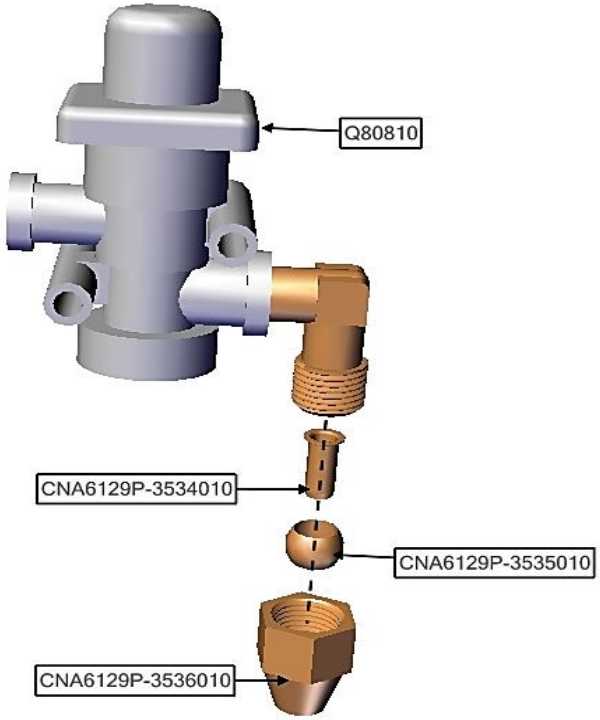

ASSB_NAME	PART NO.	NAME	QTY
CHECK VALVE ASSY	CNA6129P-3534010	INNER CONNECTOR Ø9.6	1
	CNA6129P-3535010	OUTER CONNECTOR Ø9.6	1
	CNA6129P-3536010	NUT M16	1
	Q80810	CONNECTOR M16-Z1/4	1

ASSB_NAME	PART NO.	NAME	QTY
CHECK VALVE ASSY			

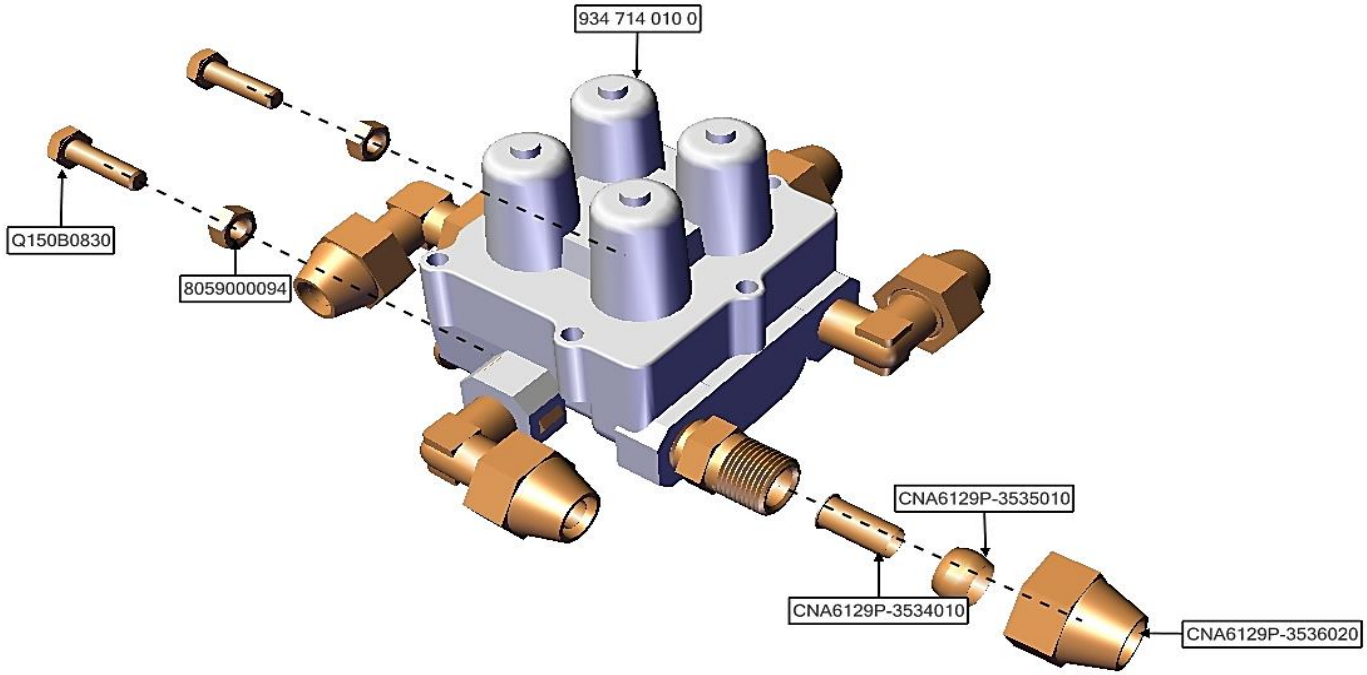

ASSB_NAME	PART NO.	NAME	QTY
TOTAL CHECK VALVE ASSY	CNA6129P-3534010	INNER CONNECTOR Ø12.7	5
	CNA6129P-3535010	OUTER CONNECTOR Ø9.6	5
	CNA6129P-3536020	NUT M18	5
	8059000094	NUT 08125	2
	934 714 010 0	TOTAL CHECK VALVE	1
	Q150B0830	BOLT 08030125	2

ASSB_NAME	PART NO.	NAME	QTY
TOTAL CHECK VALVE ASSY			

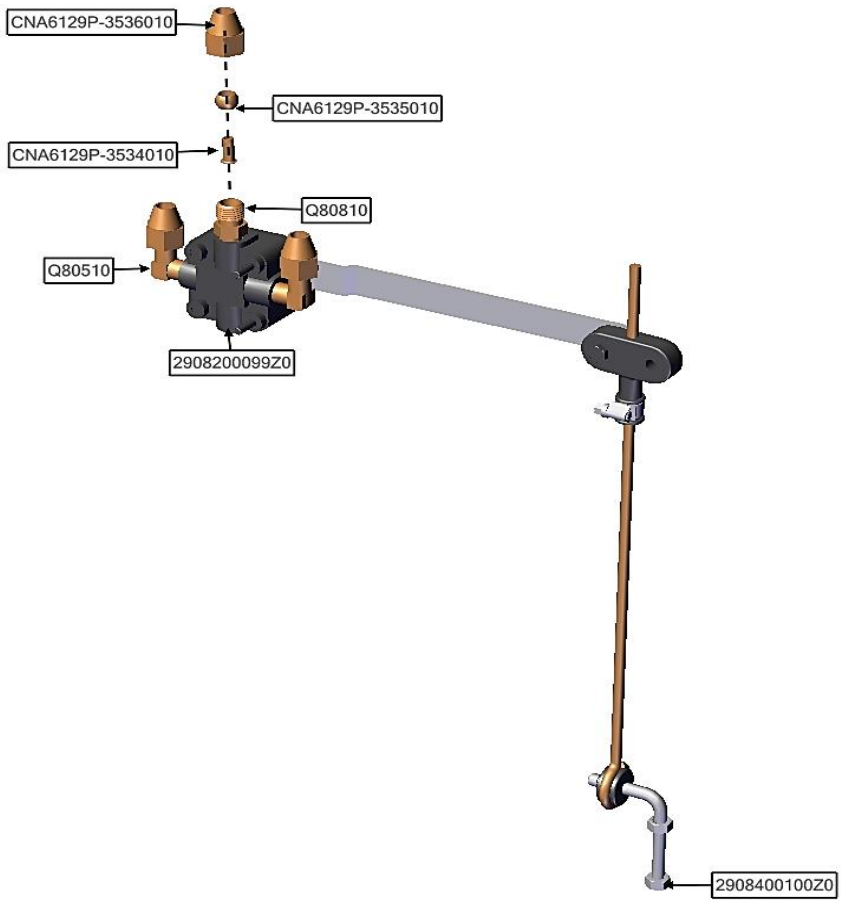

ASSB_NAME	PART NO.	NAME	QTY
AIR SUSPENSION LEVELING VALVE ASSY	CNA6129P-3534010	INNER CONNECTOR Ø9.6	1
	CNA6129P-3535010	OUTER CONNECTOR Ø9.6	1
	CNA6129P-3536010	NUT M16	1
	2908200099Z0	AIR SUSPENSION LEVELING VALVE	1
	Q80510	CONNECTOR M16-Z1/4	1
	Q80810	CONNECTOR M16-Z1/4	2
	2908400100Z0	AIR SUSPENSION LEVELING VALVE SHAFT	1

ASSB_NAME	PART NO.	NAME	QTY
AIR SUSPENSION LEVELING VALVE ASSY			

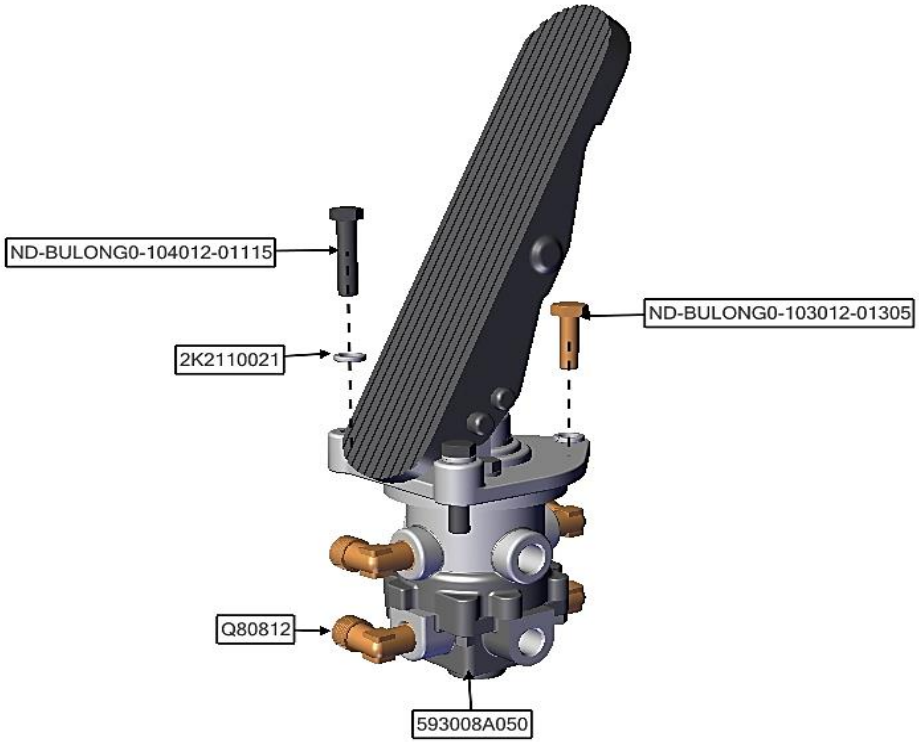

ASSB_NAME	PART NO.	NAME	QTY
CONTROLING VALVE ASSY	2K2110021	SPLIT WASHER Ø10	3
	Q80812	CONNECTOR M18-Z3/8	4
	593008A050	BRAKING PEDAL	1
	ND-BULONG0-104012-01115	BOLT 10040125	2
	ND-BULONG0-103012-01305	BOLT 10030125	1

ASSB_NAME	PART NO.	NAME	QTY
CONTROLING VALVE ASSY			

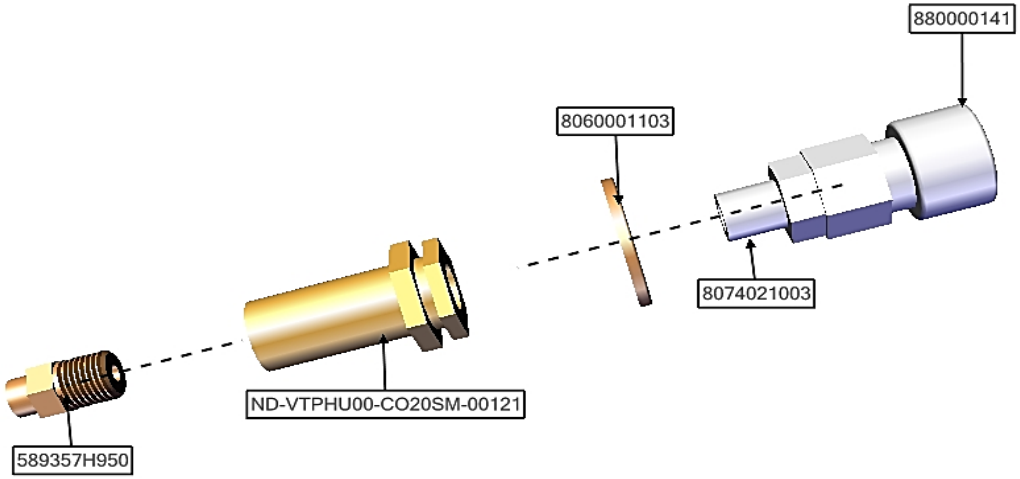

ASSB_NAME	PART NO.	NAME	QTY
SPRAYING VALVE ASSY	ND-VTPHU00-CO20SM-00121	CLIP	1
	8060001103	WASHER Ø20	1
	589357H950	CONNECTOR	1
	880000141	QUICK CONNECTOR	1
	8074021003	20SM	1

ASSB_NAME	PART NO.	NAME	QTY
SPRAYING VALVE ASSY			

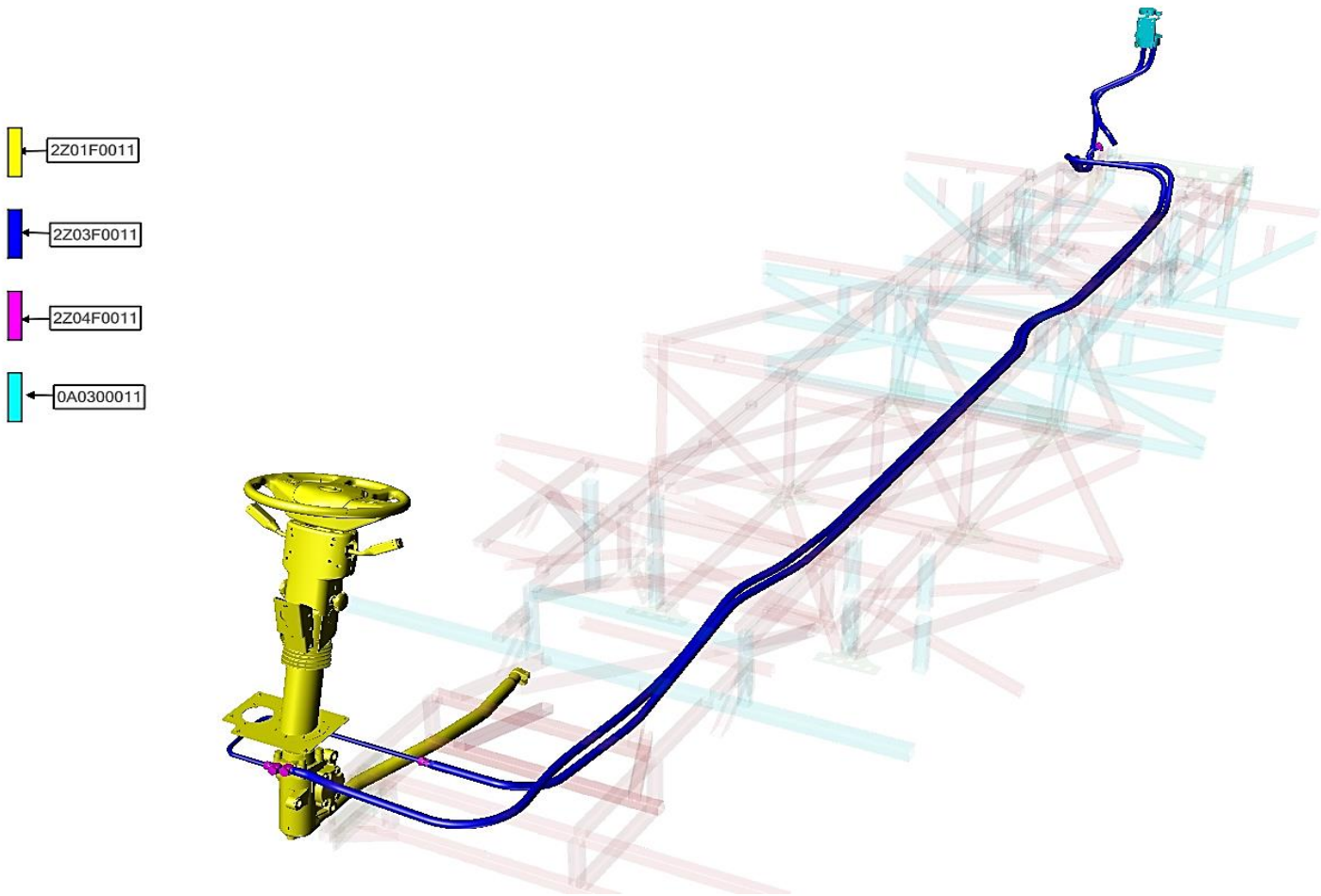

ASSB_NAME	PART NO.	NAME	QTY
STEERING SYSTEM	2Z02A0011	THE POWER STEERING	1
	2Z04F0011	CONNECTOR SYSTEM	1
	2Z03F0011	STEERING SUPPORT PIPE ASSY	1
	2Z01F0011	STEERING DRIVE ASSY	1

ASSB_NAME	PART NO.	NAME	QTY
STEERING SYSTEM			

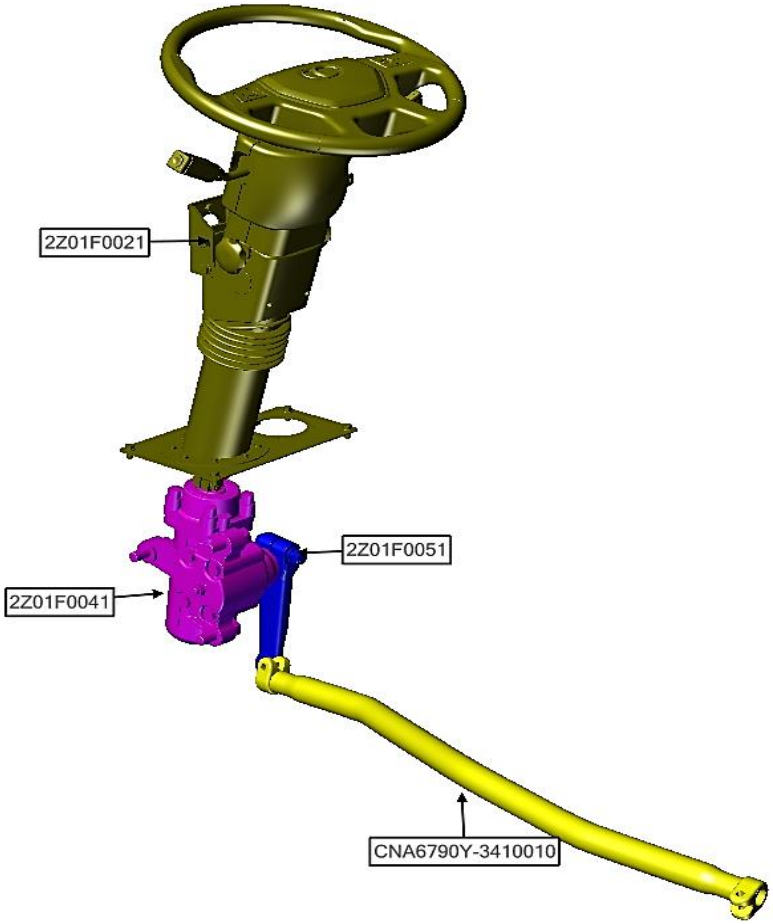

ASSB_NAME	PART NO.	NAME	QTY
STEERING DRIVE ASSY	2Z01F0021	STEERING SHAFT ASSY	1
	2Z01F0041	STEERING BOX ASSY	1
	2Z01F0051	STEERING ARM ASSY	1
	CNA6790Y-3410010	STEERING POLE	1

ASSB_NAME	PART NO.	NAME	QTY
STEERING DRIVE ASSY			

ASSB_NAME	PART NO.	NAME	QTY
STEERING ARM ASSY	Q40516	ĐỆM VÊNH Ø16	1
	CNA6800Y3-3403040	STEERING ARM ASSY	1
	Q341B16T13F2	NUT 16150	1
	Q151B1690TF2	BOLT 16090150	1

ASSB_NAME	PART NO.	NAME	QTY
STEERING ARM ASSY			

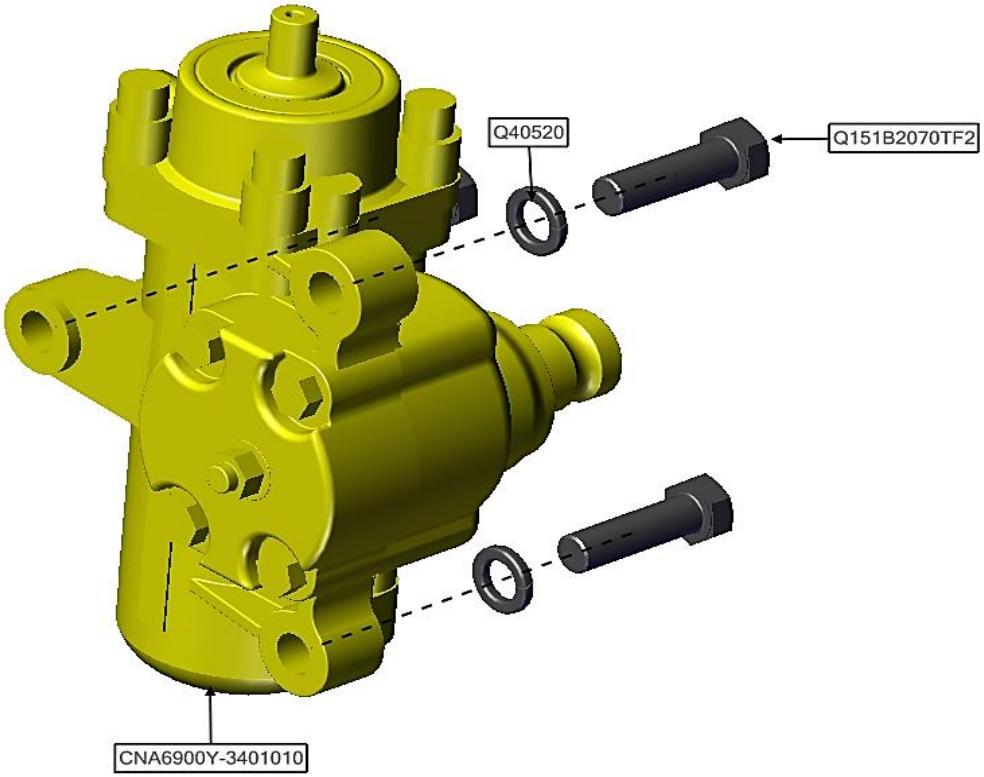

ASSB_NAME	PART NO.	NAME	QTY
STEERING BOX ASSY	Q40520	SPLIT WASHER Ø20	3
	CNA6900Y-3401010	STEERING BOX	1
	Q151B2070TF2	BOLT 20070150	3

ASSB_NAME	PART NO.	NAME	QTY
STEERING BOX ASSY			

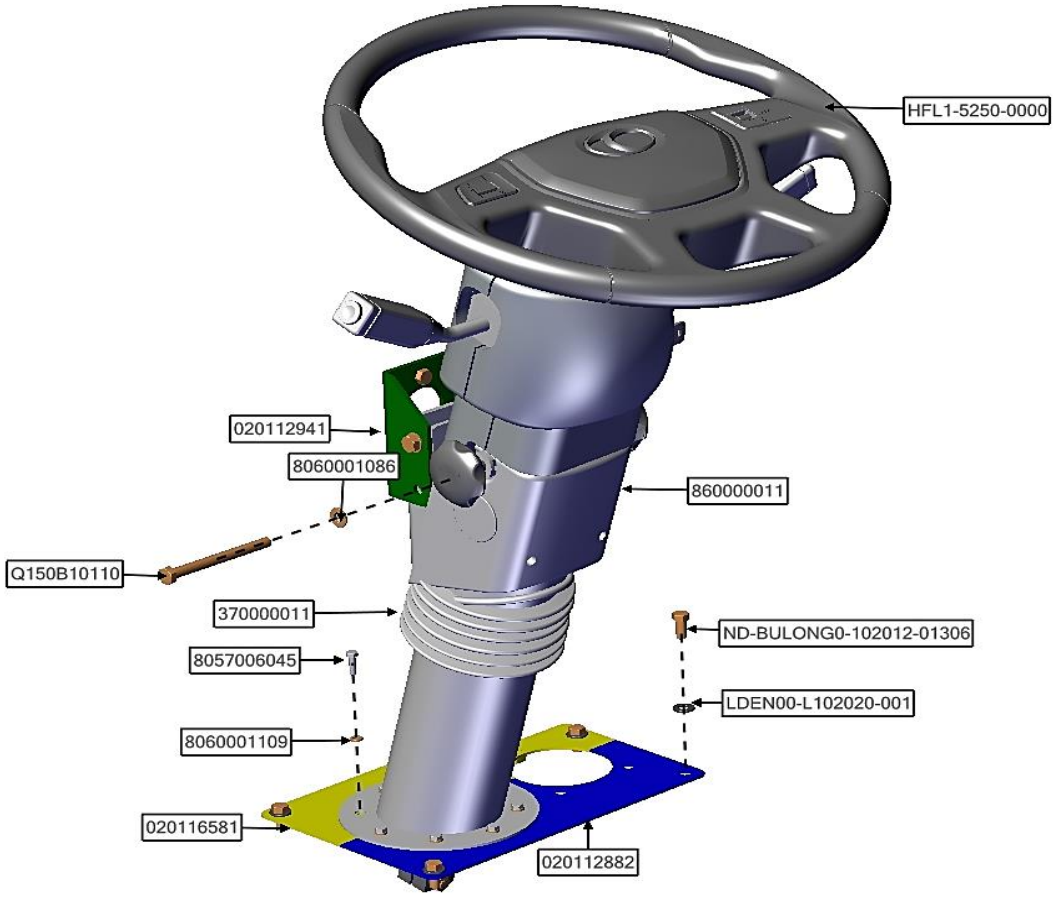

ASSB_NAME	PART NO.	NAME	QTY
STEERING SHAFT ASSY	HFL1-5250-0000	STEERING WHEEL	1
	LDEN00-L102020-001	WASHER Ø10	5
	8060001086	WASHER Ø10	1
	8060001109	WASHER Ø06	8
	860000011	STEERING SHAFT	1
	020112882	DUAL BRAKE BRACKET 02	1
	020116581	DUAL BRAKE BRACKET 01	1

ASSB_NAME	PART NO.	NAME	QTY
STEERING SHAFT ASSY	020112941	STEERING BRACKET	1
	370000011	STEERING SHAFT COVER	1
	Q150B10110	BOLT 10110150	2
	ND-BULONG0-102012-01306	BOLT 10020125	5
	8057006045	BOLT 06020100	6

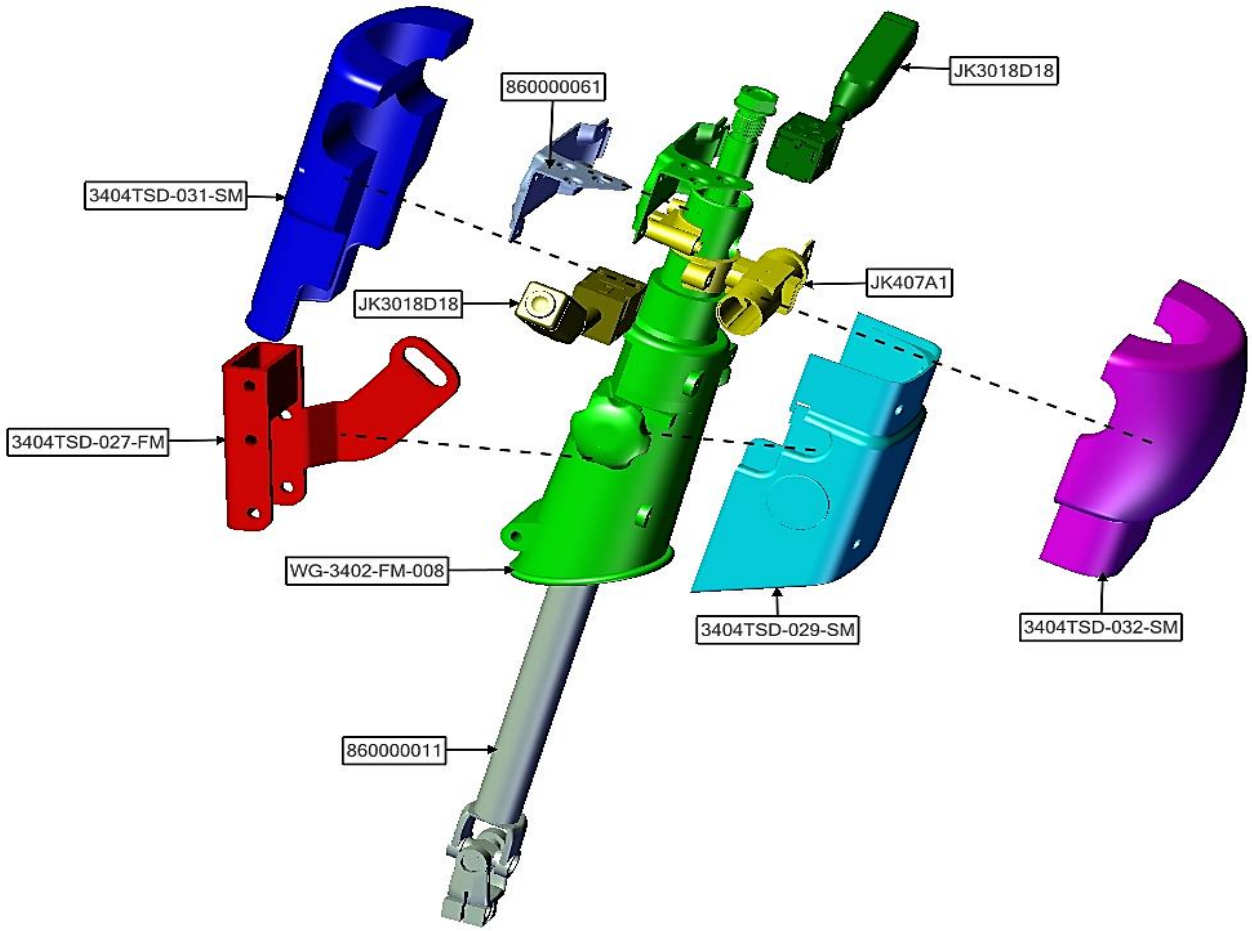

ASSB_NAME	PART NO.	NAME	QTY
STEERING SHAFT	JK407A1	STEERING SHAFT LOCK	1
	3404TSD-031-SM	FRONT COVER	1
	3404TSD-032-SM	UPPER REAR COVER	1
	3404TSD-029-SM	LOWER REAR COVER	1
	WG-3402-FM-008	MAIN SHAFT	1
	3404TSD-027-FM	STEERING SHAFT BRACKET	1
	860000061	BRACKET	1

ASSB_NAME	PART NO.	NAME	QTY
STEERING SHAFT	860000011	STEERING PROPELLER	1
	JK3018D18	LH LEVER ASSY	1
	JK3018D18	RH LEVER ASSY	1

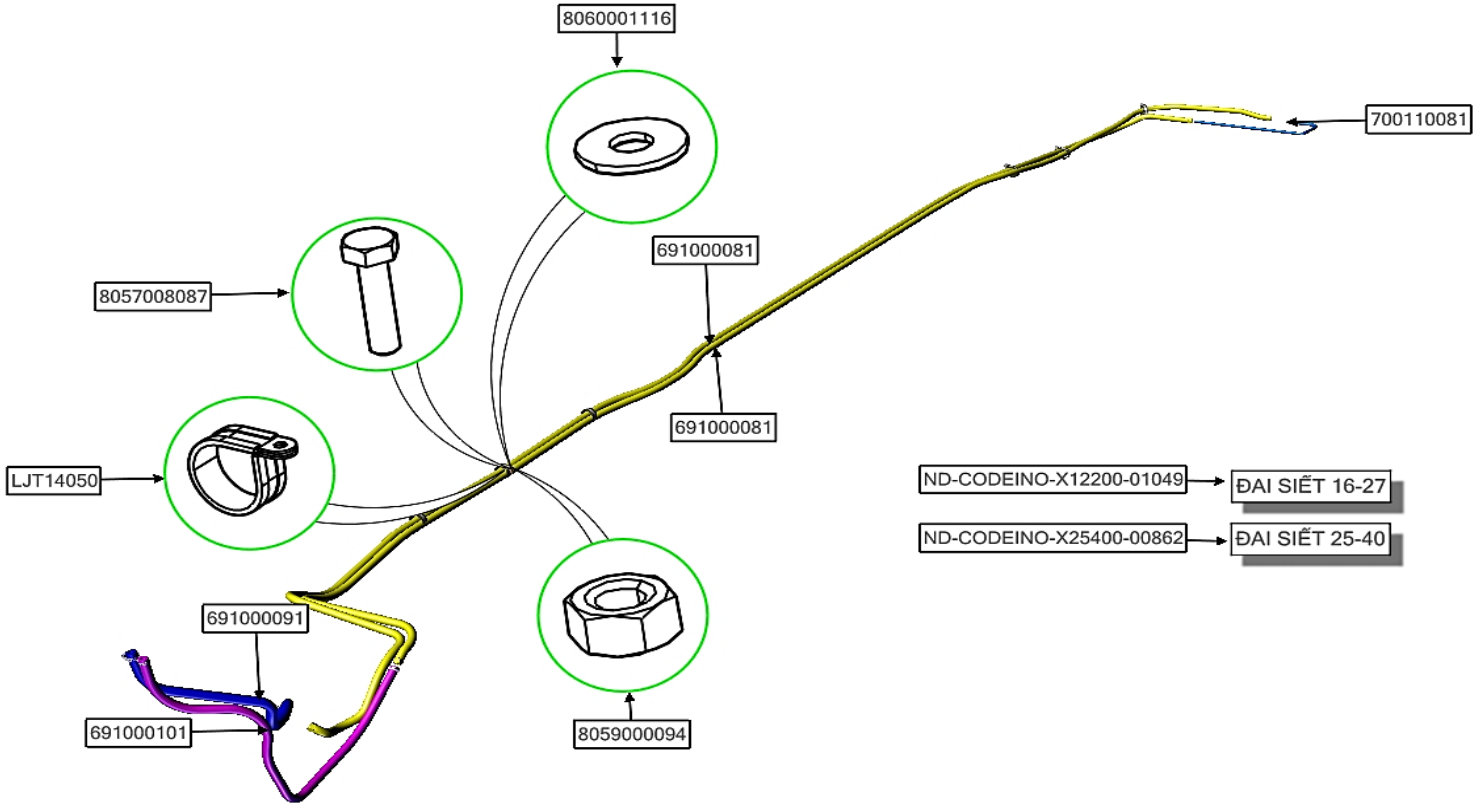

ASSB_NAME	PART NO.	NAME	QTY
STEERING SUPPORT PIPE ASSY	700110081	STEEL PIPE, POWER STEERING	1
	691000101	RUBBER PIPE 03,STEERING SYSTEM	1
	691000091	RUBBER PIPE 02,STEERING SYSTEM	1
	691000081	STEERING OIL PIPE 01	2
	8059000094	NUT 08125	5
	ND-CODEINO-X25400-00862	CLAMP 25-40	2
	ND-CODEINO-X12200-01049	CLAMP 16-27	2

ASSB_NAME	PART NO.	NAME	QTY
STEERING SUPPORT PIPE ASSY	8060001116	WASHER Ø08	5
	LJT14050	CLIP Ø50	6
	805700808	BOLT 08030125	5

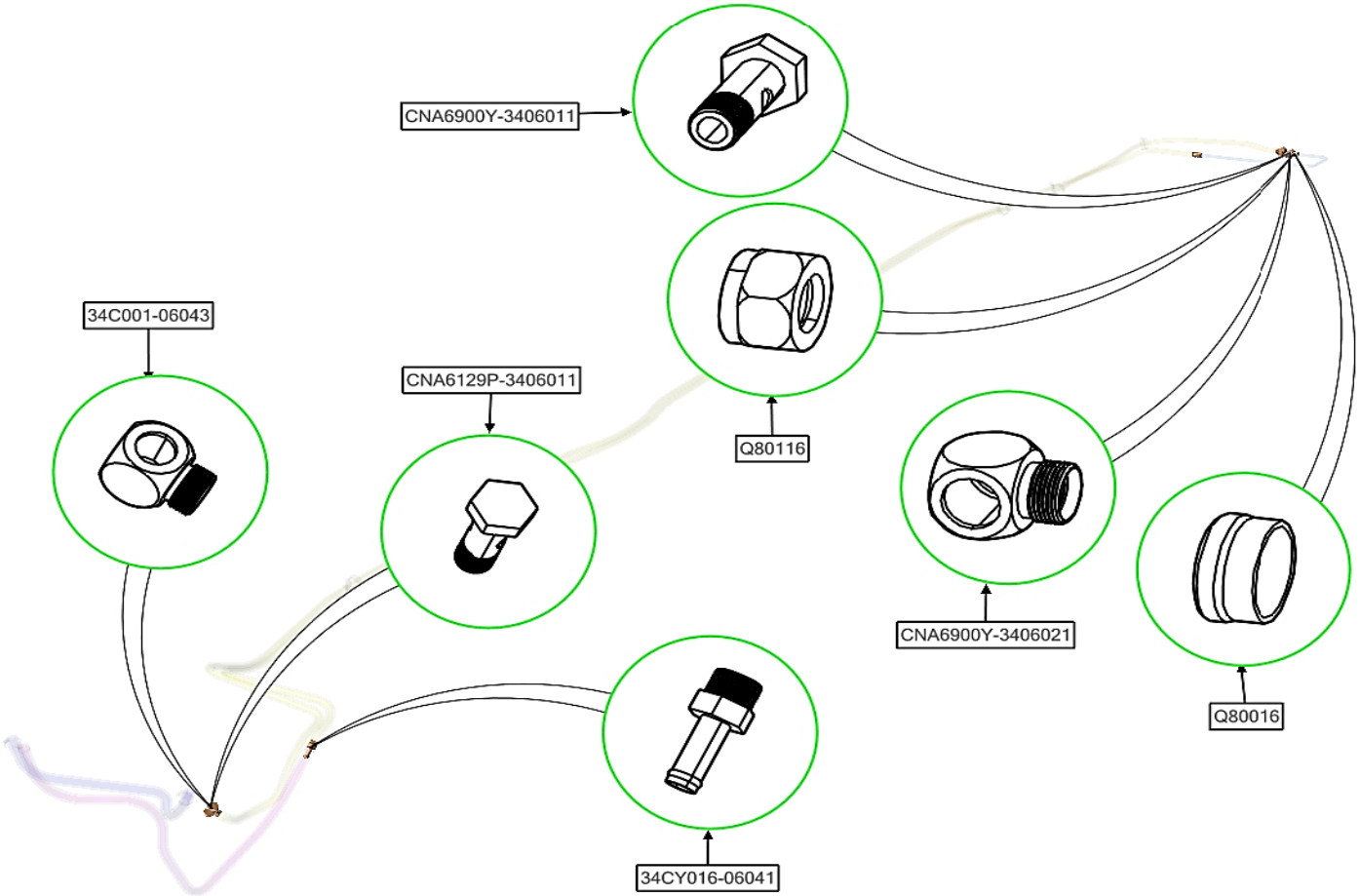

ASSB_NAME	PART NO.	NAME	QTY
CONNECTOR SYSTEM	Q80016	OUTER CONNECTOR Ø16	2
	CNA6900Y-3406021	FUEL DISTRIBUTOR Ø20	2
	34C001-06043	FUEL DISTRIBUTOR Ø18	1
	Q80116	NUT M22	2
	34CY016-06041	CONNECTOR PIPE Ø16	1
	CNA6900Y-3406011	HOLLOW BOLT M20	1
	CNA6129P-3406011	HOLLOW BOLT M18	1

ASSB_NAME	PART NO.	NAME	QTY
CONNECTOR SYSTEM			

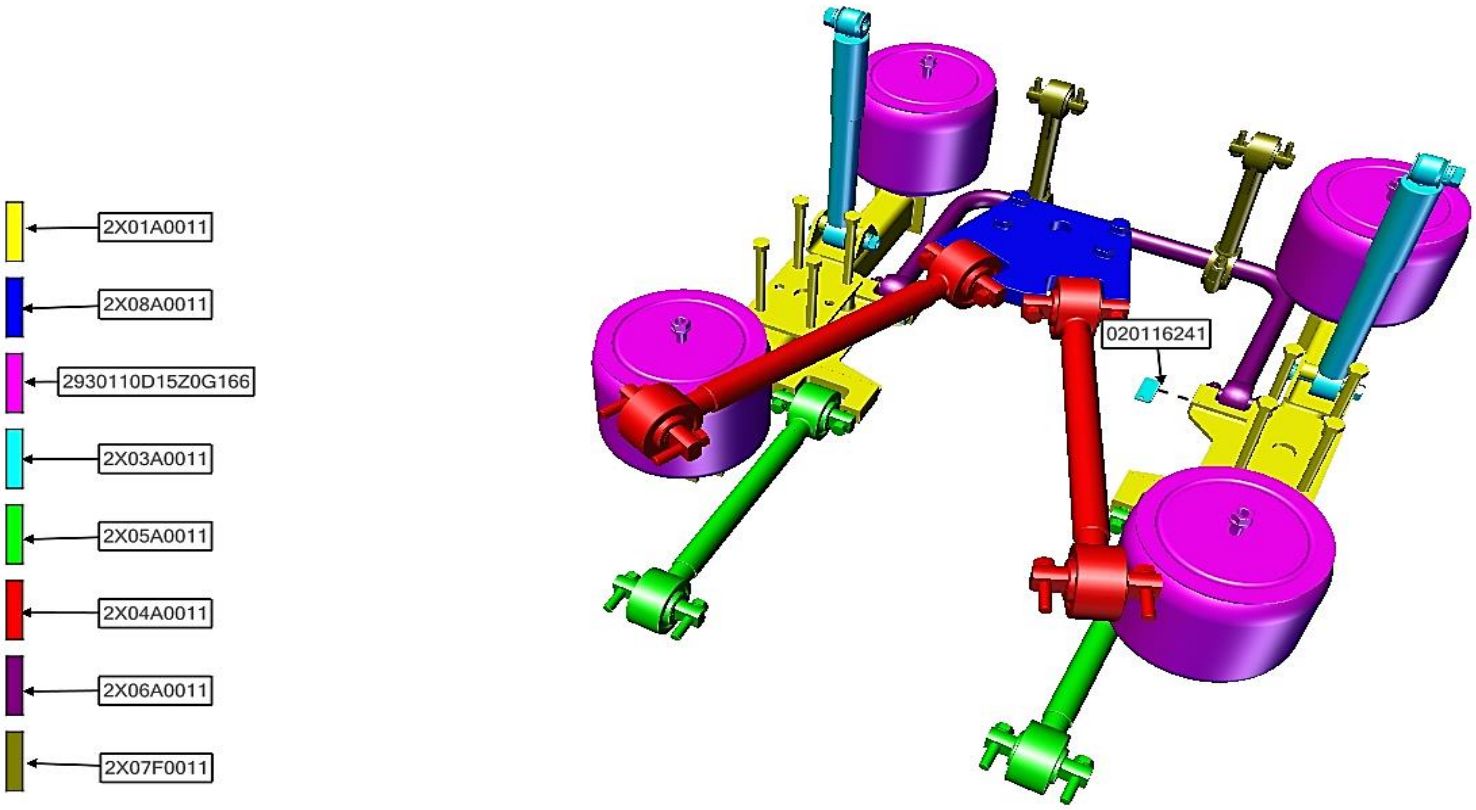

ASSB_NAME	PART NO.	NAME	QTY
REAR SUSPENSION SYSTEM	020116241	AIR SUSPENSION LEVELING VALVE BRACKET	2
	2X06A0011	REAR BALANCE BAR ASSY	1
	2X07F0011	REAR BALANCE BAR AS	1
	2X05A0011	VERTICAL BALANCE BAR ASSY 02	1
	2X04A0011	VERTICAL BALANCE BAR ASSY 01	1
	2X03A0011	REAR SHOCK OBSORBER ASSY	1
	2X08A0011	VERTICAL BALANCE BAR MOUNTING ASSY	1

ASSB_NAME	PART NO.	NAME	QTY
REAR SUSPENSION SYSTEM	2X01A0011	REAR AXLE MOUNTING ASSY	1
	2930110D15Z0G166	REAR AIRBAG ASSY	4

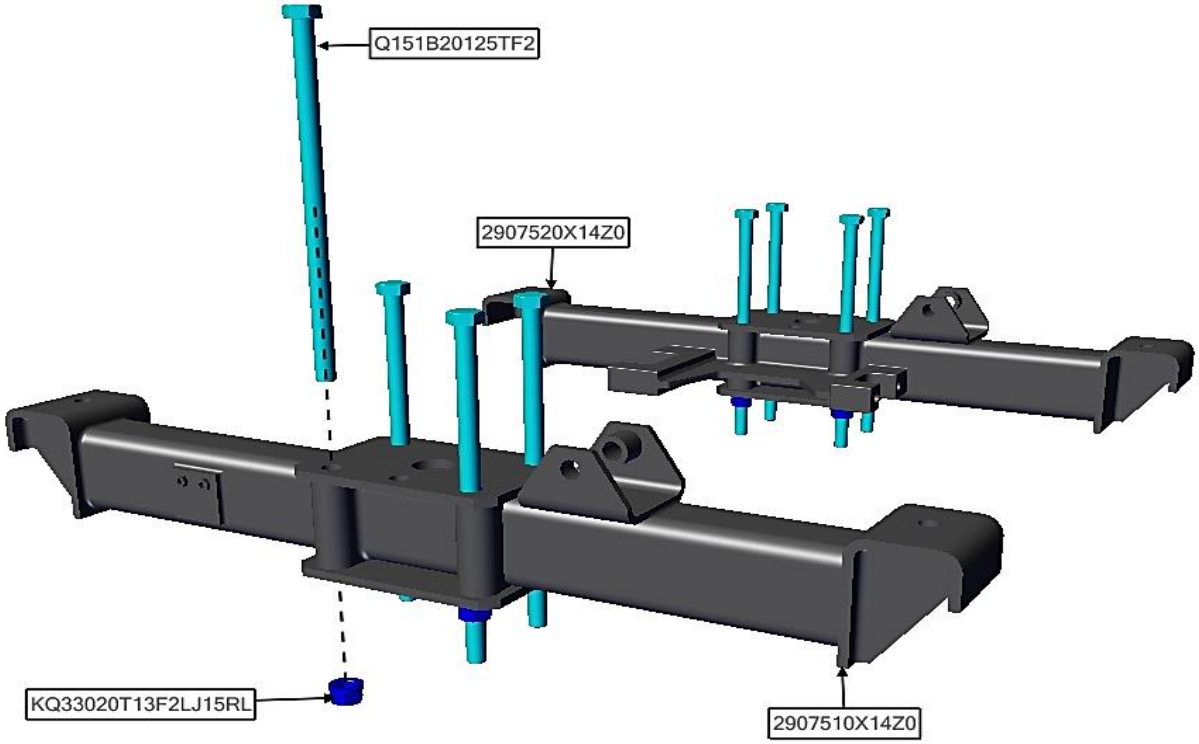

ASSB_NAME	PART NO.	NAME	QTY
REAR AXLE MOUNTING ASSY	KQ33020T13F2LJ15RL	NUT 20150	8
	2907510X14Z0	LH REAR AXLE MOUNTING	1
	2907520X14Z0	RH REAR AXLE MOUNTING	1
	Q151B20125TF2	BOLT 20360150	8

ASSB_NAME	PART NO.	NAME	QTY
REAR AXLE MOUNTING ASSY			

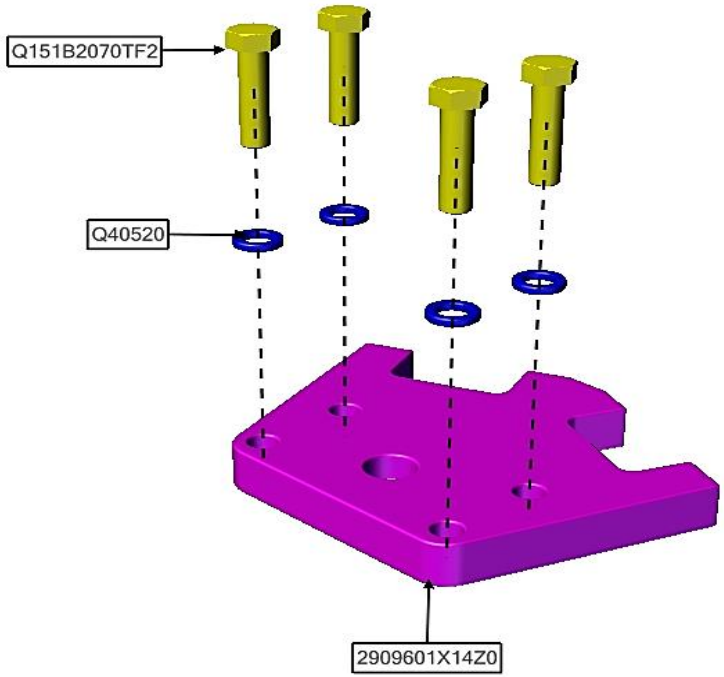

ASSB_NAME	PART NO.	NAME	QTY
VERTICAL BALANCE BAR MOUNTING ASSY	Q40520	SPLIT WASHER Ø20	4
	2909601X14Z0	VERTICAL BALANCE BAR MOUNTING	1
	Q151B2070TF2	BOLT 20070150	4

ASSB_NAME	PART NO.	NAME	QTY
VERTICAL BALANCE BAR MOUNTING ASSY			

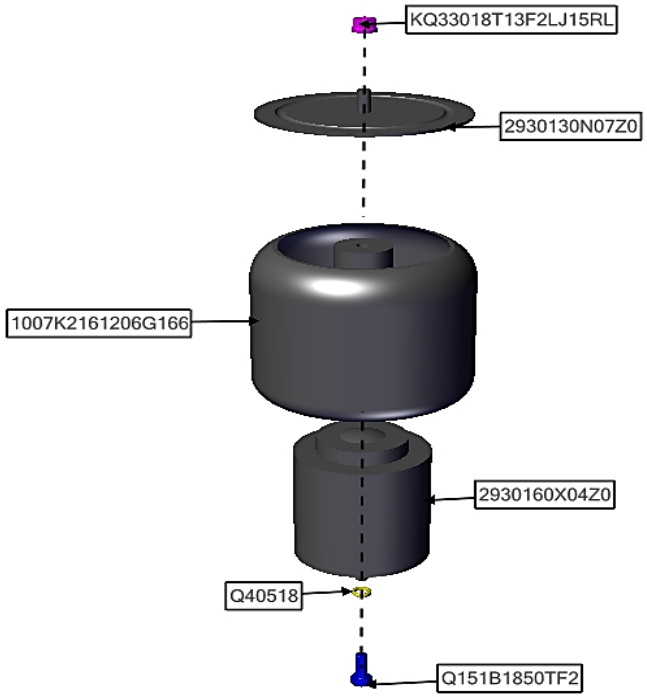

ASSB_NAME	PART NO.	NAME	QTY
REAR AIRBAG ASSY	Q40518	SPLIT WASHER Ø18	4
	2930130N07Z0	ABOVE MOUTING,REAR AIR BAG	1
	2930160X04Z0	LOWER MOUTING,REAR AIR BAG	1
	KQ33018T13F2LJ15RL	NUT 18150	4
	1007K2161206G166	REAR AIR BAG RUBBER	1
	Q151B1850TF2	BOLT 18040150	4

ASSB_NAME	PART NO.	NAME	QTY
REAR AIRBAG ASSY			

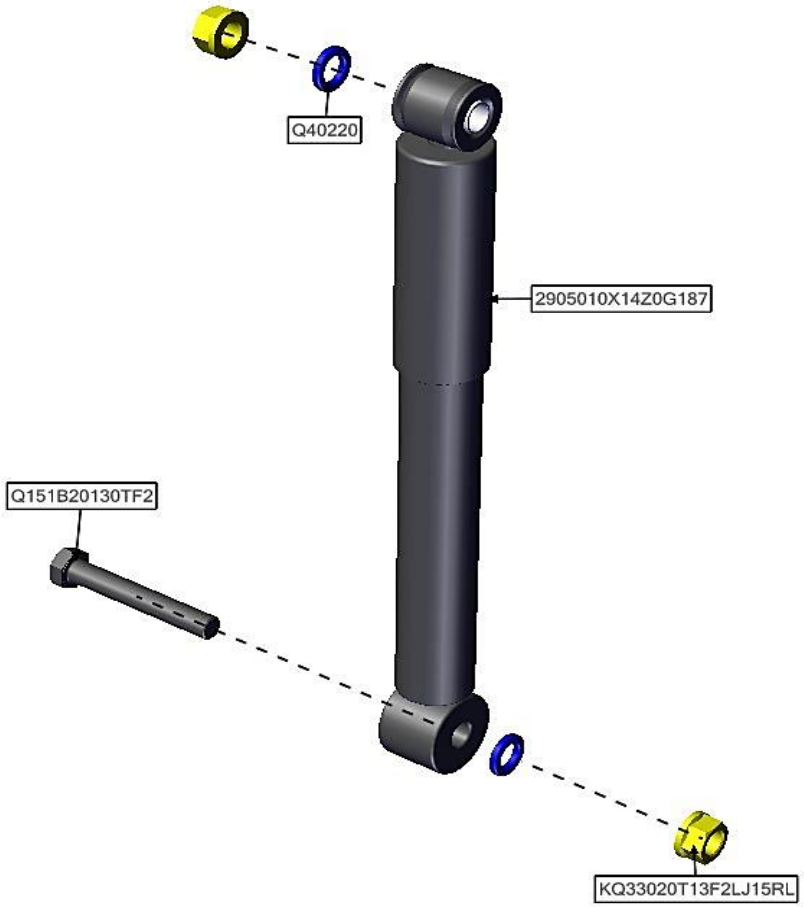

ASSB_NAME	PART NO.	NAME	QTY
REAR SHOCK OBSORBER ASSY	Q40220	SPLIT WASHER Ø20	2
	KQ33020T13F2LJ15RL	NUT 20150	2
	2905010X14Z0G187	REAR SHOCK OBSORBER	1
	Q151B20130TF2	BOLT 20130150	1

ASSB_NAME	PART NO.	NAME	QTY
REAR SHOCK OBSORBER ASSY			

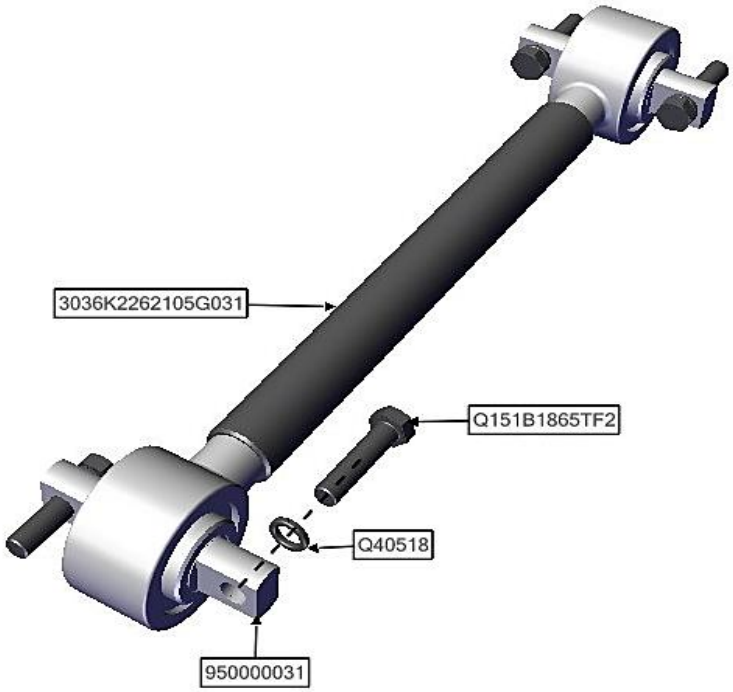

ASSB_NAME	PART NO.	NAME	QTY
VERTICAL BALANCE BAR ASSY 01	Q40518	SPLIT WASHER Ø18	4
	3036K2262105G031	REAR VERTICAL BALANCE BAR 01	1
	950000031	SPACER	2
	Q151B1865TF2	BOLT 18065150	4
	Q40518	SPLIT WASHER Ø18	4
	3036K2862105G031	REAR VERTICAL BALANCE BAR 02	1
	950000031	SPACER	2

ASSB_NAME	PART NO.	NAME	QTY
VERTICAL BALANCE BAR ASSY 01			

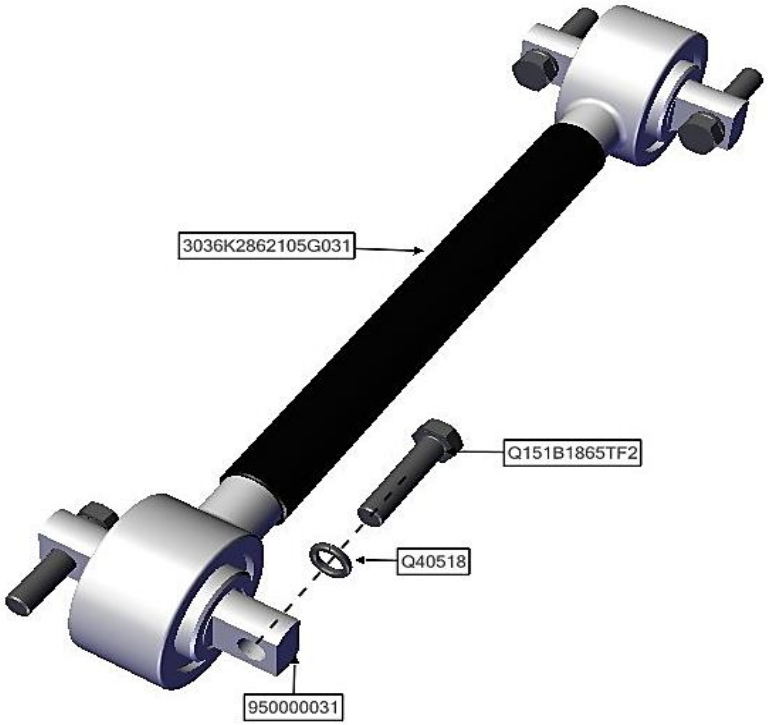

ASSB_NAME	PART NO.	NAME	QTY
VERTICAL BALANCE BAR ASSY 02	Q40518	SPLIT WASHER Ø18	4
	3036K2862105G031	REAR VERTICAL BALANCE BAR 02	1
	950000031	SPACER	2
	Q151B1865TF2	BOLT 18065150	4

ASSB_NAME	PART NO.	NAME	QTY
VERTICAL BALANCE BAR ASSY 02			

ASSB_NAME	PART NO.	NAME	QTY
REAR BALANCE BAR ASSY	Q40514	SPLIT WASHER Ø14	4
	2906120X14Z0	REAR BALANCE BAR	1
	940000041	SPACER	2
	Q151B1490TF3	BOLT 14050150	4

ASSB_NAME	PART NO.	NAME	QTY
REAR BALANCE BAR ASSY			

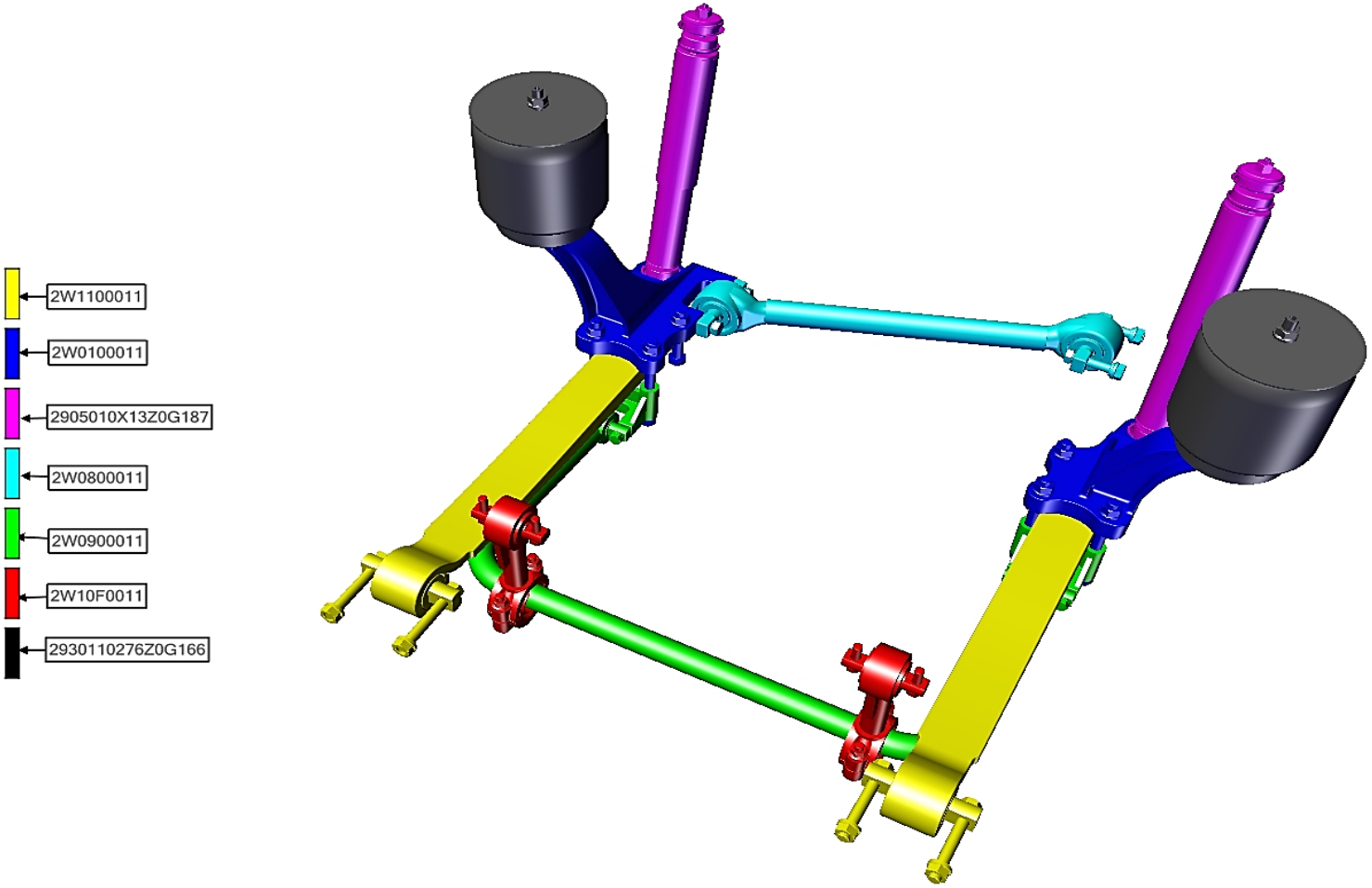

ASSB_NAME	PART NO.	NAME	QTY
FRONT SUSPENSION SYSTEM	2905010X13Z0G187	FRONT SHOCK OBSORBER	2
	2W0100011	AIR BAG MOUNTING ASSY	1
	2W0900011	FRONT BALANCE BAR ASSY	1
	2W10F0011	FRONT BALANCE BAR ASSY	1
	2W0800011	HORIZONTAL BALANCE BAR ASSY	1
	2W1100011	FRONT DAMPING TWEEZRS	1
	2930110276Z0G166	FRONT AIR BAG	2

ASSB_NAME	PART NO.	NAME	QTY
FRONT SUSPENSION SYSTEM			

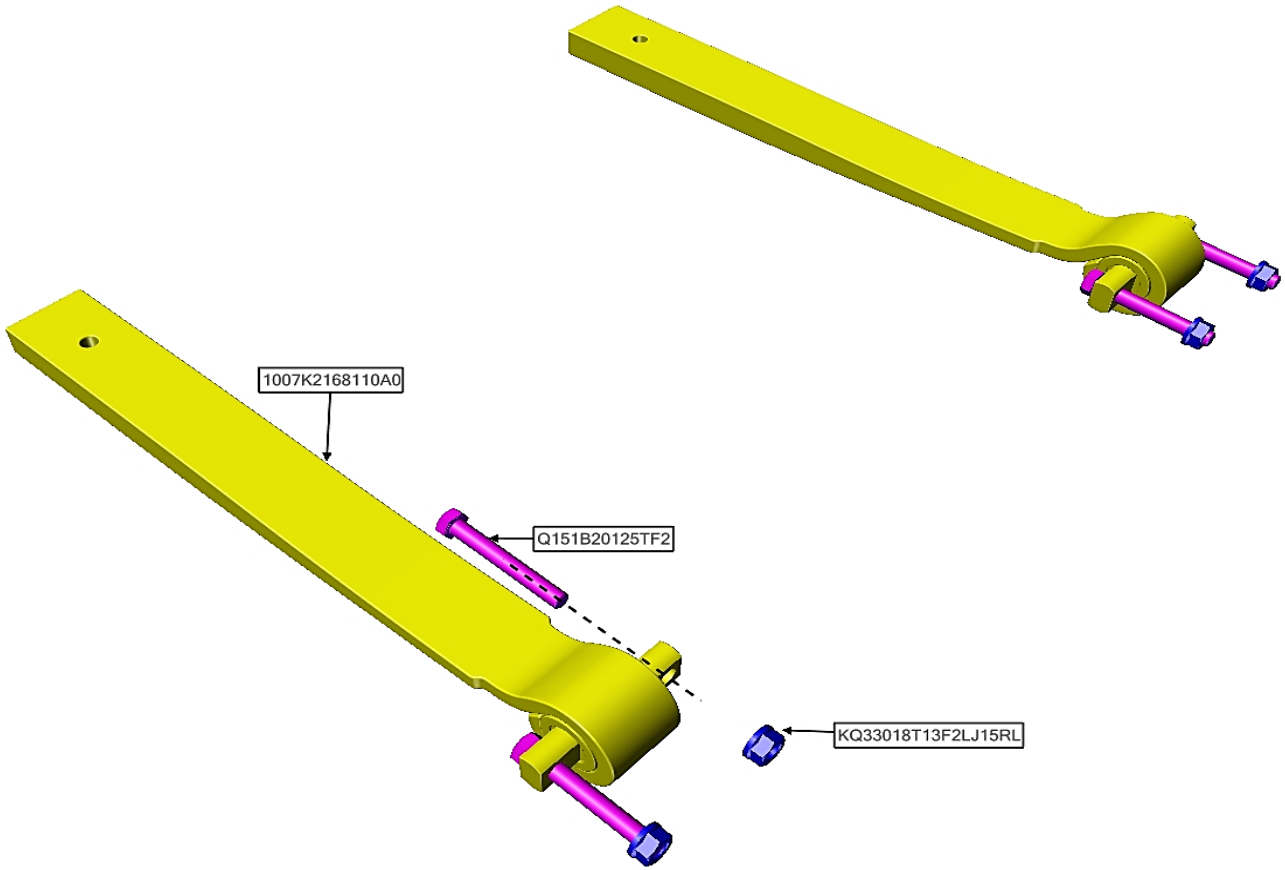

ASSB_NAME	PART NO.	NAME	QTY
FRONT DAMPING TWEEZRS	KQ33018T13F2LJ15RL	NUT 18150	4
	1007K2168110A0	DAMPING TWEEZRS	2
	Q151B20125TF2	BOLT 18130150	4

ASSB_NAME	PART NO.	NAME	QTY
FRONT DAMPING TWEEZRS			

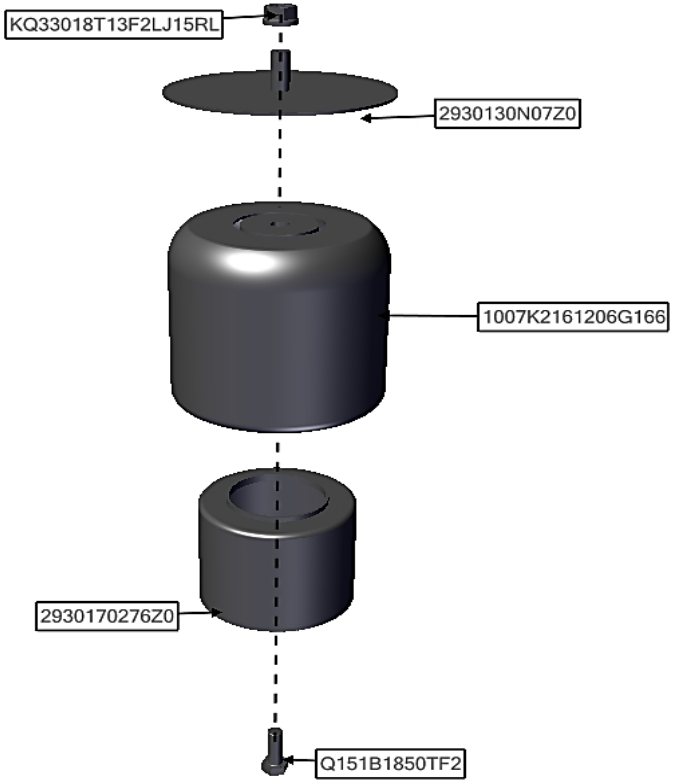

ASSB_NAME	PART NO.	NAME	QTY
FRONT AIR BAG	2930130N07Z0	ABOVE MOUNTING	1
	2930170276Z0	BELOW MOUNTING	1
	KQ33018T13F2LJ15RL	NUT 18150	1
	1007K2161206G166	AIR BAG RUBBER	1
	Q151B1850TF2	BOLT 18050150	1

ASSB_NAME	PART NO.	NAME	QTY
FRONT AIR BAG			

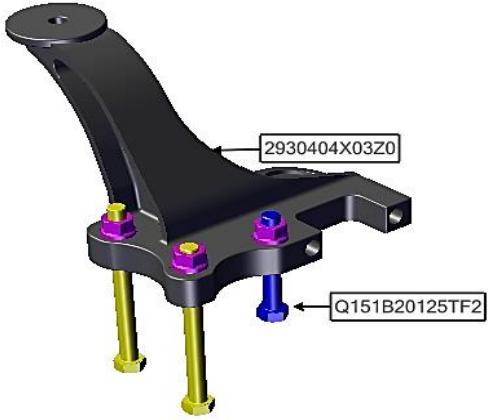

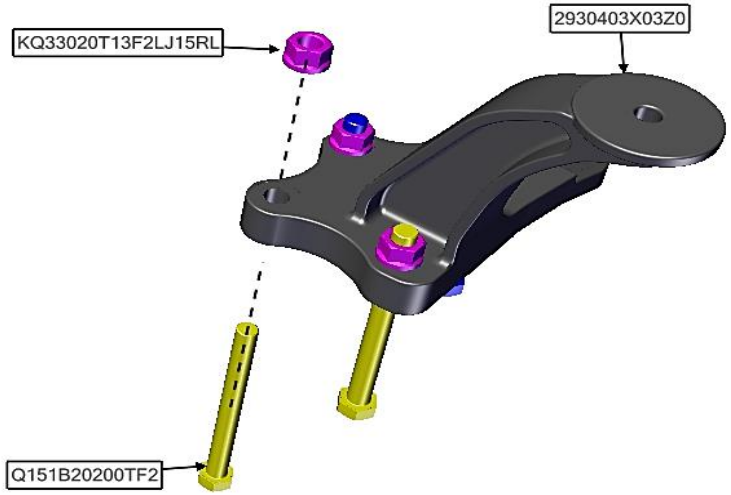

ASSB_NAME	PART NO.	NAME	QTY
AIR BAG MOUNTING ASSY	2930403X03Z0	LH AIR BAG MOUNTING	1
	2930404X03Z0	RH AIR BAG MOUNTING	1
	KQ33020T13F2LJ15RL	NUT 20150	8
	Q151B20200TF2	BOLT 20200150	4
	Q151B20125TF2	BOLT 20120150	4

ASSB_NAME	PART NO.	NAME	QTY
AIR BAG MOUNTING ASSY			

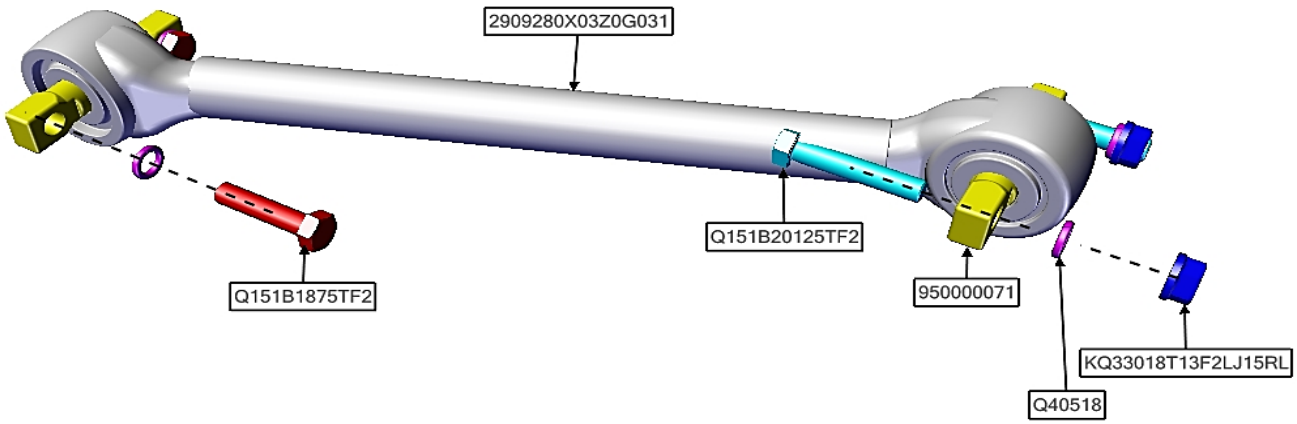

ASSB_NAME	PART NO.	NAME	QTY
HORIZONTAL BALANCE BAR ASSY	Q40518	SPLIT WASHER Ø18	4
	KQ33018T13F2LJ15RL	NUT 18150	2
	2909280X03Z0G031	HORIZONTAL BALANCE BAR	1
	950000071	SPACER	2
	Q151B20125TF2	BOLT 18090150	2
	Q151B1875TF2	BOLT 18075150	2

ASSB_NAME	PART NO.	NAME	QTY
HORIZONTAL BALANCE BAR ASSY			

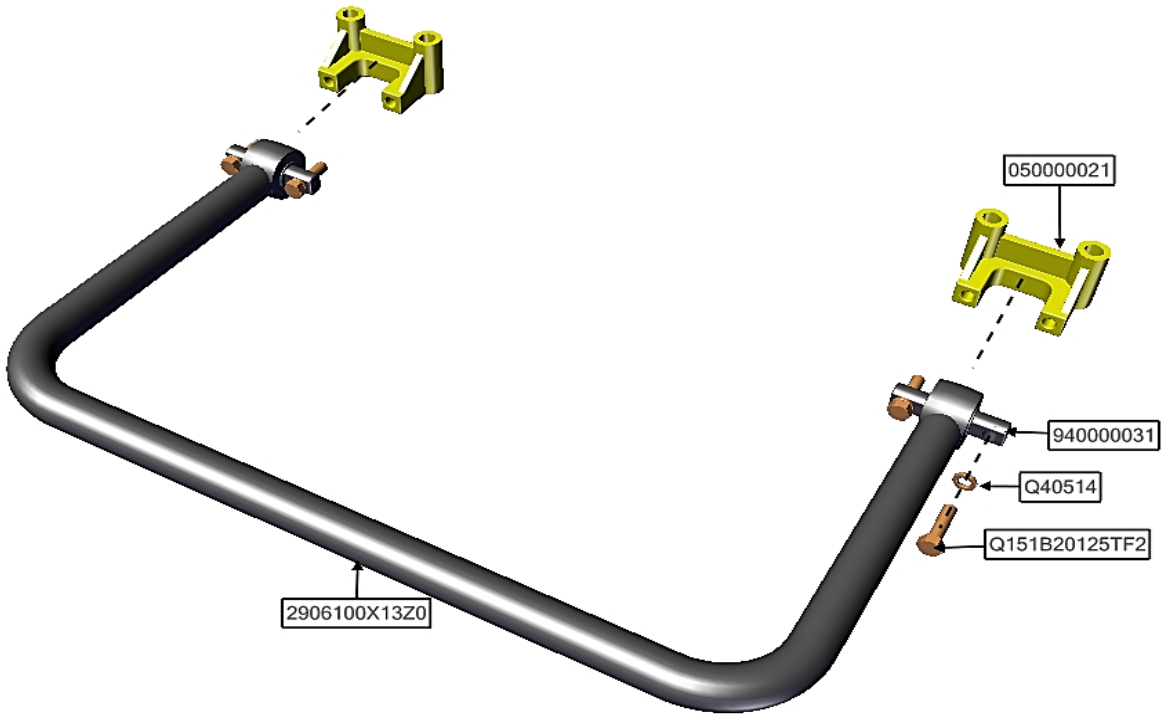

ASSB_NAME	PART NO.	NAME	QTY
FRONT BALANCE BAR ASSY	Q40514	SPLIT WASHER Ø14	4
	2906100X13Z0	FRONT BALANCE BAR	1
	050000021	FRONT BALANCE BAR MOUNTING	2
	940000031	SPACER	2
	Q151B20125TF2	BOLT 14050150	4

ASSB_NAME	PART NO.	NAME	QTY
FRONT BALANCE BAR ASSY			

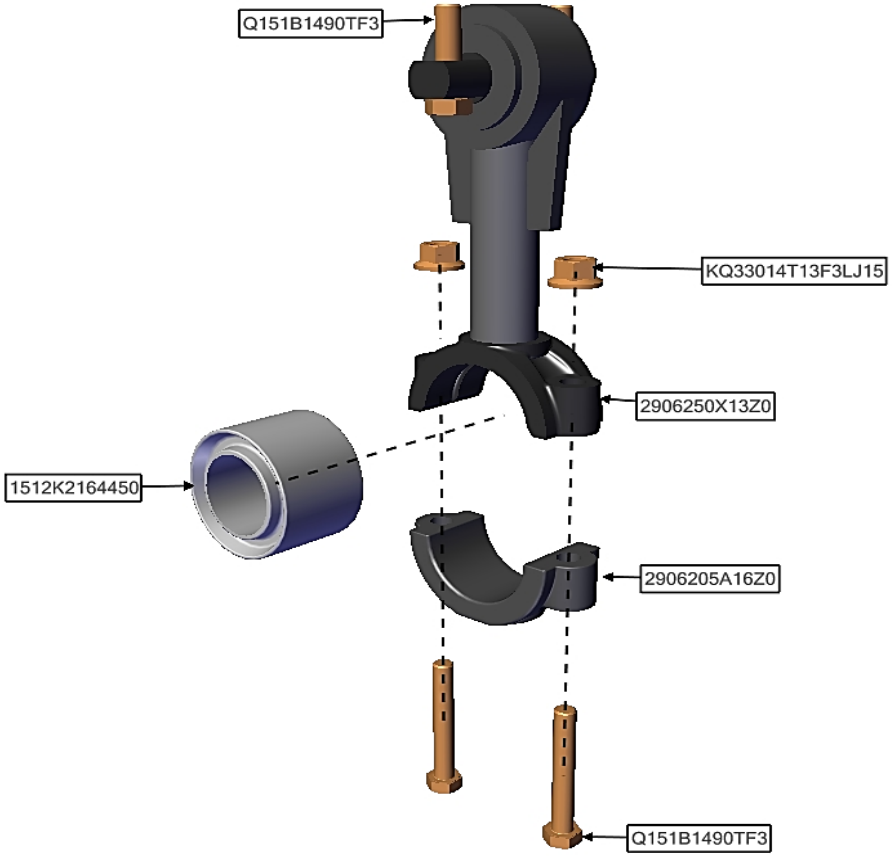

ASSB_NAME	PART NO.	NAME	QTY
FRONT BALANCE BAR ASSY	2906205A16Z0	BALANCE BAR MOUNTING	1
	KQ33014T13F3LJ15	NUT 14150	2
	2906250X13Z0	FRONT BALANCE BAR	1
	1512K2164450	RUBBER 01	1
	Q151B1490TF3	BOLT 14090150	2

ASSB_NAME	PART NO.	NAME	QTY
FRONT BALANCE BAR ASSY			

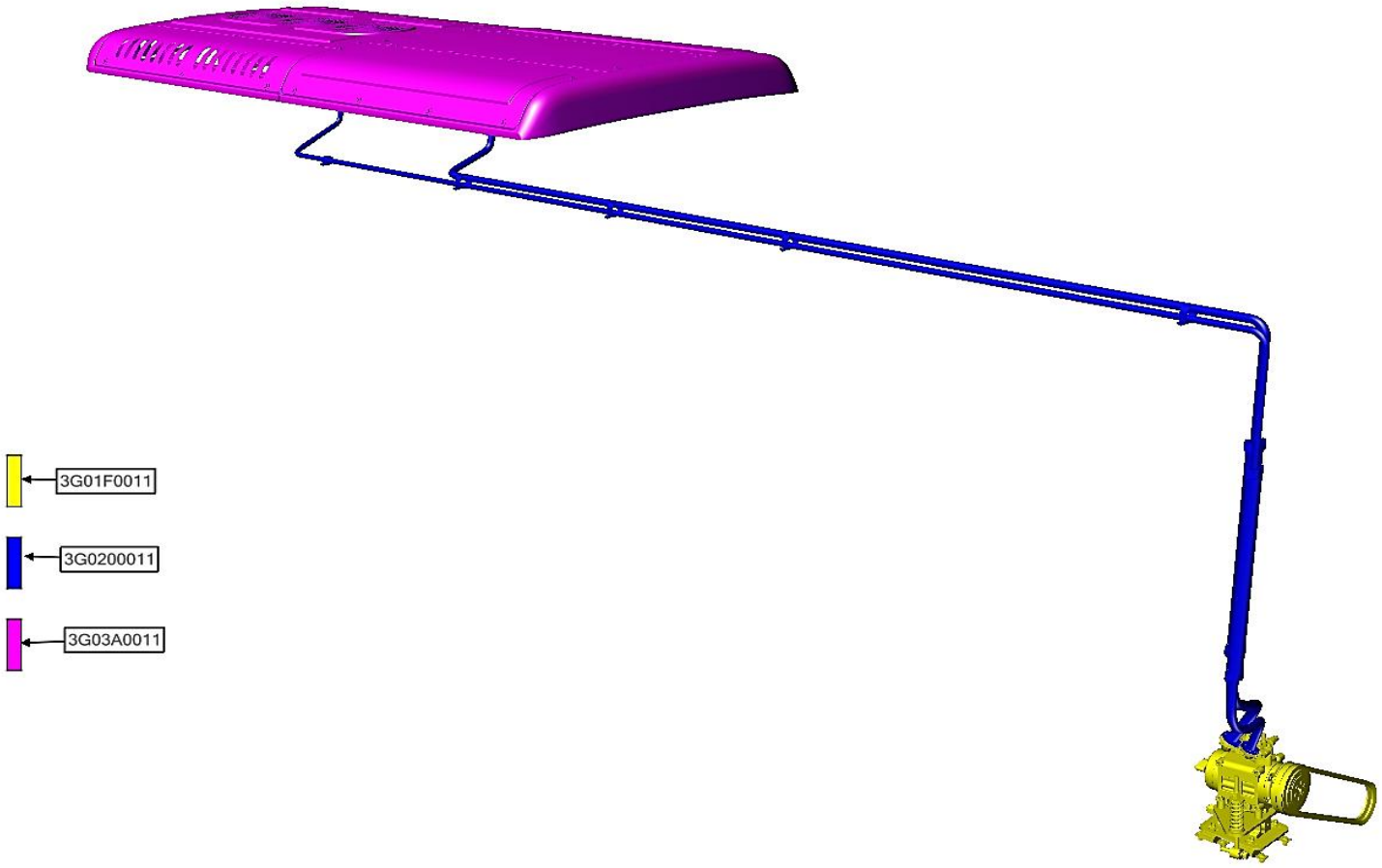

ASSB_NAME	PART NO.	NAME	QTY
AIR CONDITIONING SYSTEM	3G01F0011	GAS COMPRESION ASSY	1
	3G0200011	GAS PIPE SYSTEM	1
	3G03A0011	AIR CONDITIONING PANEL	1

ASSB_NAME	PART NO.	NAME	QTY
AIR CONDITIONING SYSTEM			

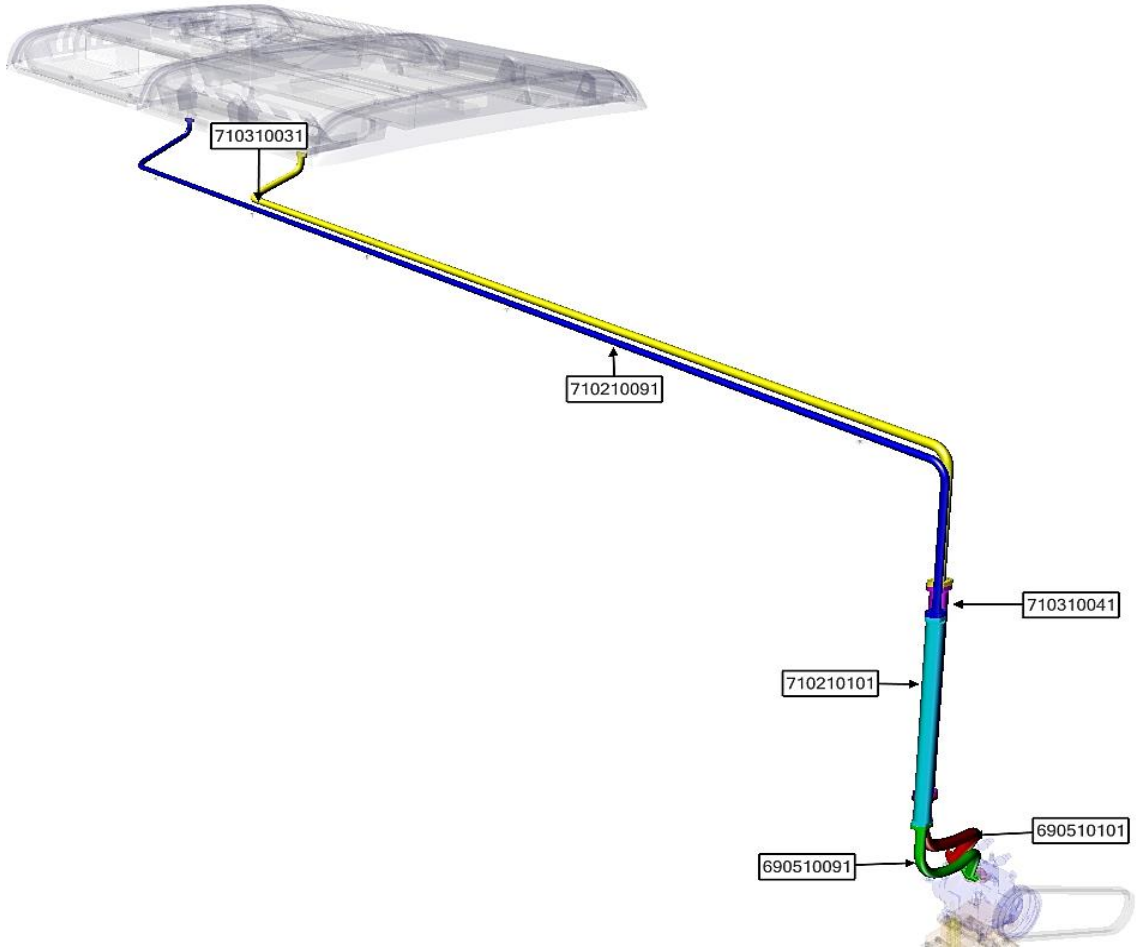

ASSB_NAME	PART NO.	NAME	QTY
GAS PIPE SYSTEM	690510091	RUBBER PIPE,AIR CONDITIONING SYSTEM	1
	690510101	RUBBER PIPE,AIR CONDITIONING SYSTEM	1
	710210101	GAS PIPE 04	1
	710310041	GAS PIPE 03	1
	710210091	GAS PIPE 02	1
	710310031	GAS PIPE 01	1

ASSB_NAME	PART NO.	NAME	QTY
GAS PIPE SYSTEM			

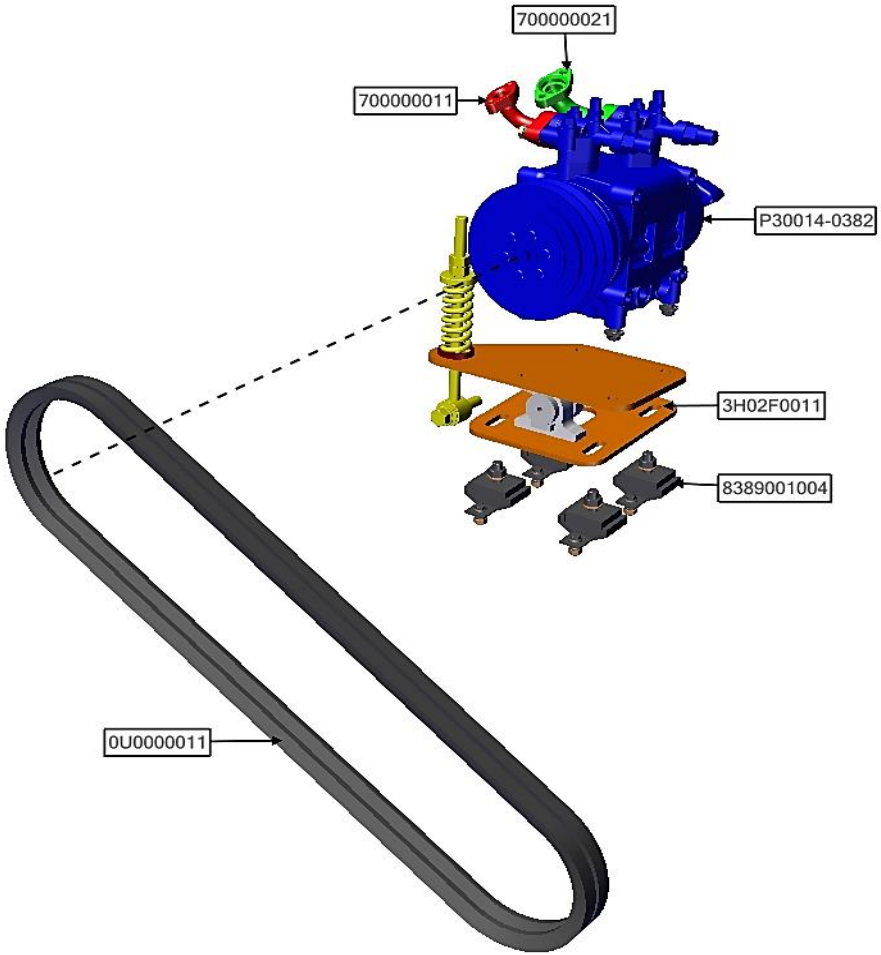

ASSB_NAME	PART NO.	NAME	QTY
GAS COMPRESION ASSY	700000021	COMPRESSOR CONNECTOR 02	1
	700000011	COMPRESSOR CONNECTOR 01	1
	P30014-0382	AIR COMPRESSOR	1
	0U0000011	BELT, AIR COMPRESSOR	2
	3H02F0011	AIR COMPRESION MOUNTING ASSY	1
	8389001004	AIR COMPRESION RUBBER CUSHION	4

ASSB_NAME	PART NO.	NAME	QTY
GAS COMPRESION ASSY			

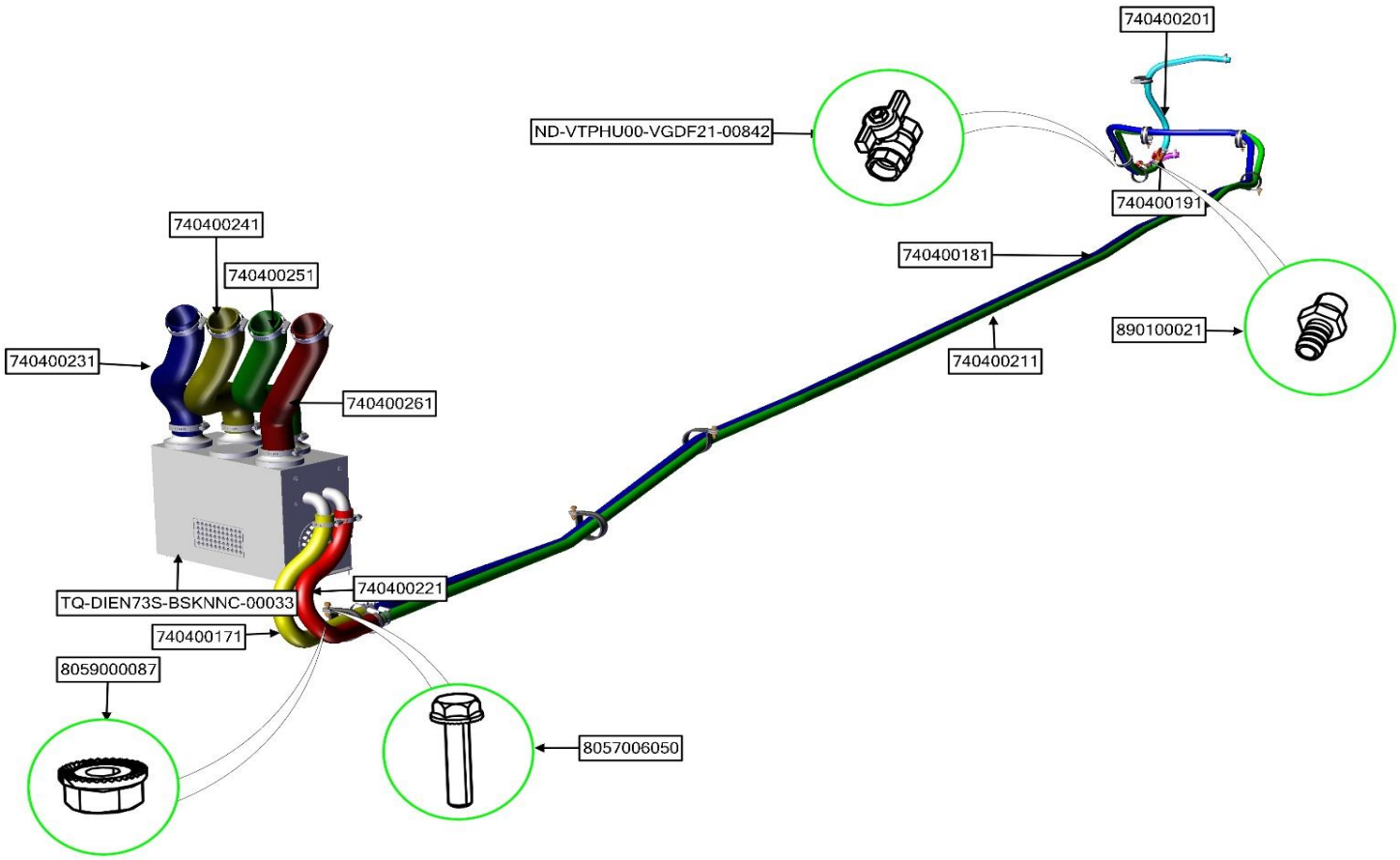

ASSB_NAME	PART NO.	NAME	QTY
GLASS HEATING SYSTEM	740400261	HEATING PIPE 04	1
	740400251	HEATING PIPE 03	1
	740400241	HEATING PIPE 02	1
	740400231	HEATING PIPE 01	1
	740400221	HEATING WATER PIPE 06	1
	740400211	HEATING WATER PIPE 05	1
	740400201	HEATING WATER PIPE 04	1

ASSB_NAME	PART NO.	NAME	QTY
GLASS HEATING SYSTEM	740400191	HEATING WATER PIPE 03	1
	740400181	HEATING WATER PIPE 02	1
	740400171	HEATING WATER PIPE 01	1
	8059000087	NUT 06100	8
	8088000034	CLAMP 40-60	8
	ND-CODEINO-X25400-00862	CLAMP 25-40	4
	ND-CODEINO-X12200-01049	CLAMP 16-27	8

ASSB_NAME	PART NO.	NAME	QTY
GLASS HEATING SYSTEM	LJT14060	CLIP Ø60	5
	LJT14050	CLIP Ø50	4
	ND-VTPHU00-VGDF21-00842	HEATING WATER LOCK VALVE	2
	890100021	HEATING VALVE CONECTOR	4
	TQ-DIEN73S-BSKNNC-00033	GLASS HEATING TANK	1
	8057006050	BOLT 06025100	8

ASSB_NAME	PART NO.	NAME	QTY
GLASS HEATING SYSTEM			

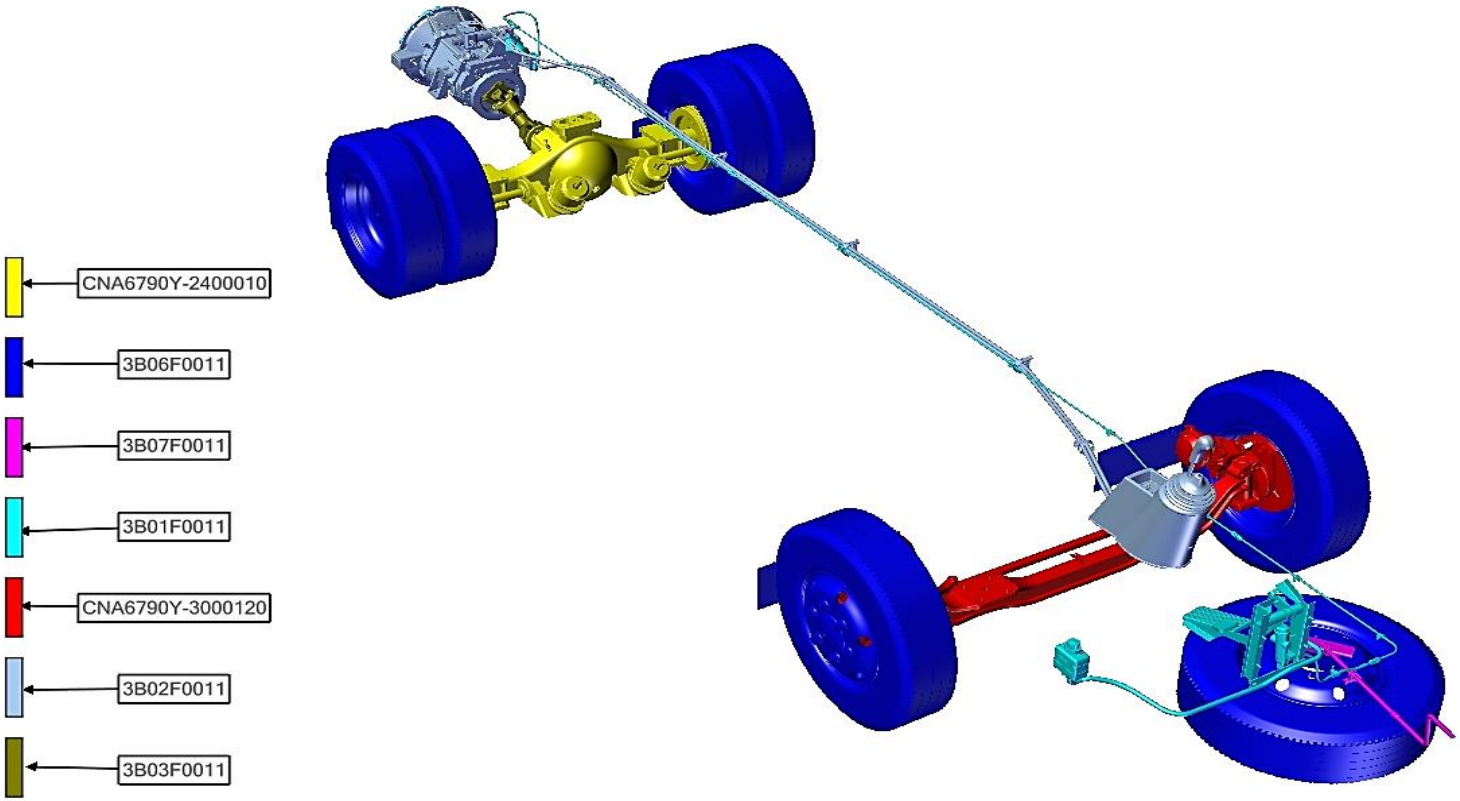

ASSB_NAME	PART NO.	NAME	QTY
POWER TRAIN	3B03F0011	PROPELLER ASSY	1
	3B02F0011	GEAR BOX ASSY	1
	3B01F0011	CLUTCH	1
	3B06F0011	WHEEL ASSR	1
	CNA6790Y-3000120	FRONT AXLE	1
	CNA6790Y-2400010	REAR AXLE	1
	3B07F0011	CONNECTING COMPONENTS	1

ASSB_NAME	PART NO.	NAME	QTY
POWER TRAIN			

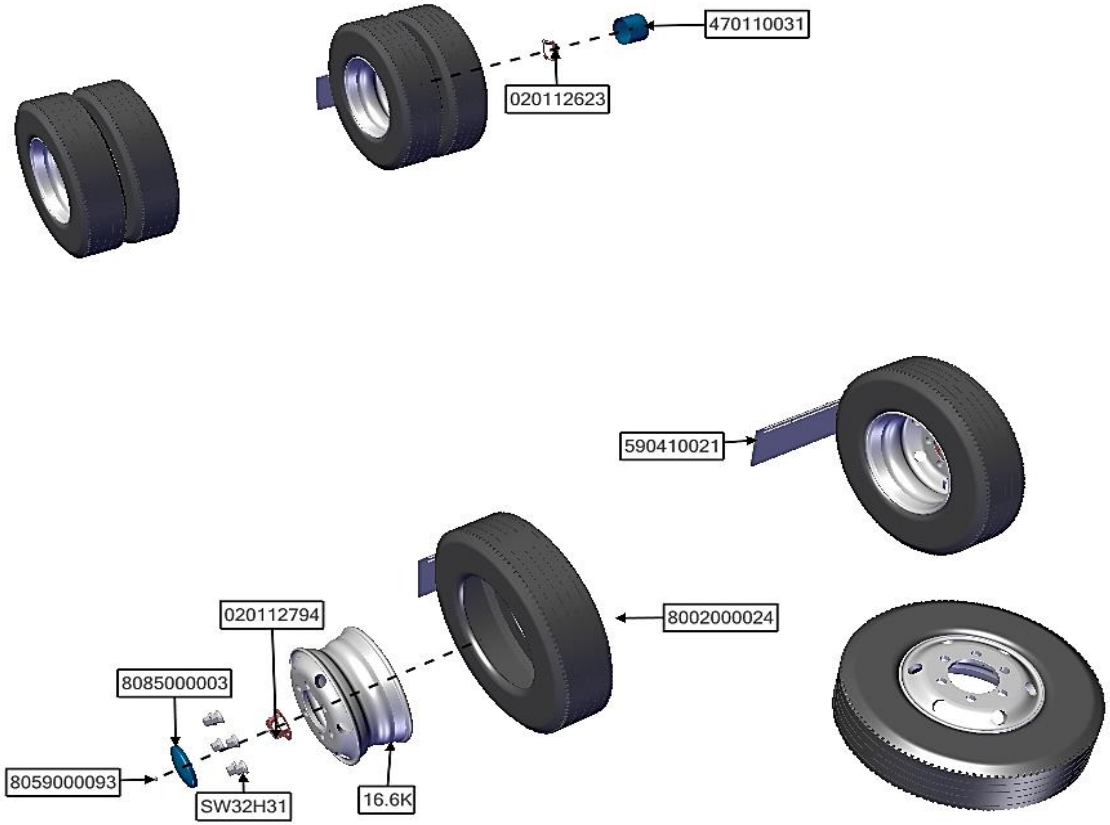

ASSB_NAME	PART NO.	NAME	QTY
WHEEL ASSY	8059000093	NUT 08125	1
	590410021	DUSTY PANNEL	1
	SW32H31	NUT	1
	020112794	FRONT AXLE COVER BRACKET	1
	020112623	REAR AXLE COVER BRACKET	1
	16.6K	RIM	1
	8002000024	TIRE	1

ASSB_NAME	PART NO.	NAME	QTY
WHEEL ASSR	8085000003	FRONT AXLE COVER	1
	470110031	REAR AXLE COVER	1

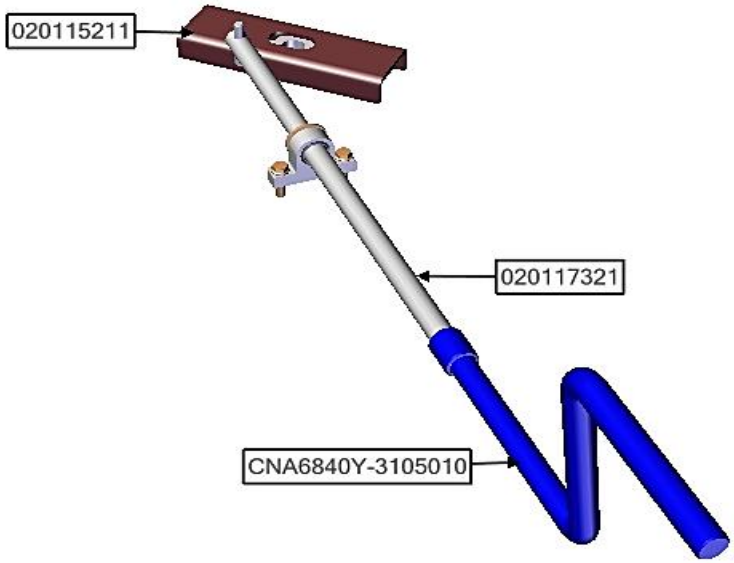

ASSB_NAME	PART NO.	NAME	QTY
CONNECTING COMPONENTS	CNA6840Y-3105010	HAND CRANK	1
	020117321	FIX HAND CRANK	1
	020115211	FIX BRACKET	1

ASSB_NAME	PART NO.	NAME	QTY
CONNECTING COMPONENTS			

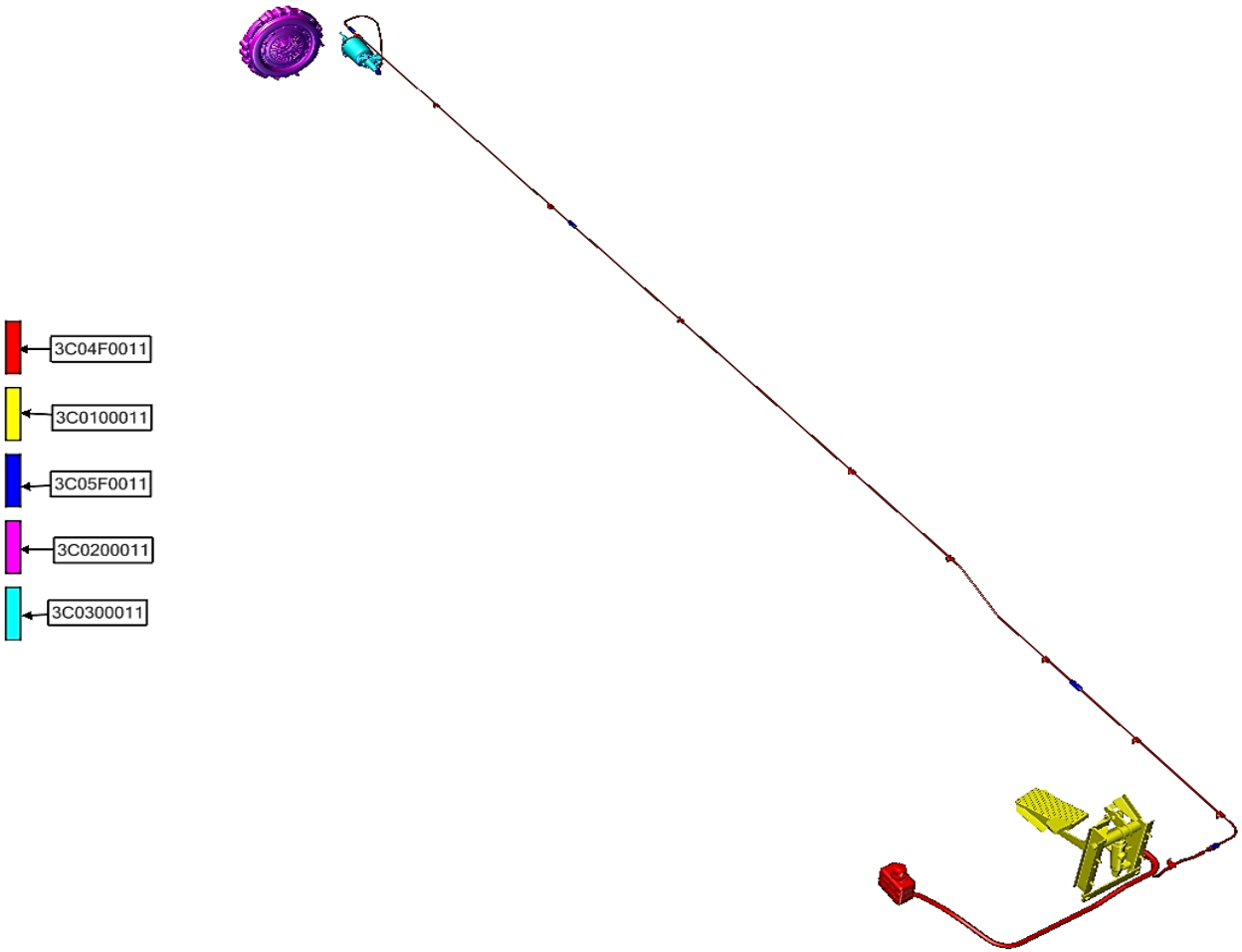

ASSB_NAME	PART NO.	NAME	QTY
CLUTCH SYSTEM	3C0300011	THE POWER CLUTCH	1
	3C0200011	MAIN CLUTCH	1
	3C05F0011	CONNECTOR SYSTEM	1
	3C0100011	CLUTCH PEDAL ASSY	1
	3C04F0011	HYDRAULIC PIPE ASSY	1

ASSB_NAME	PART NO.	NAME	QTY
CLUTCH			

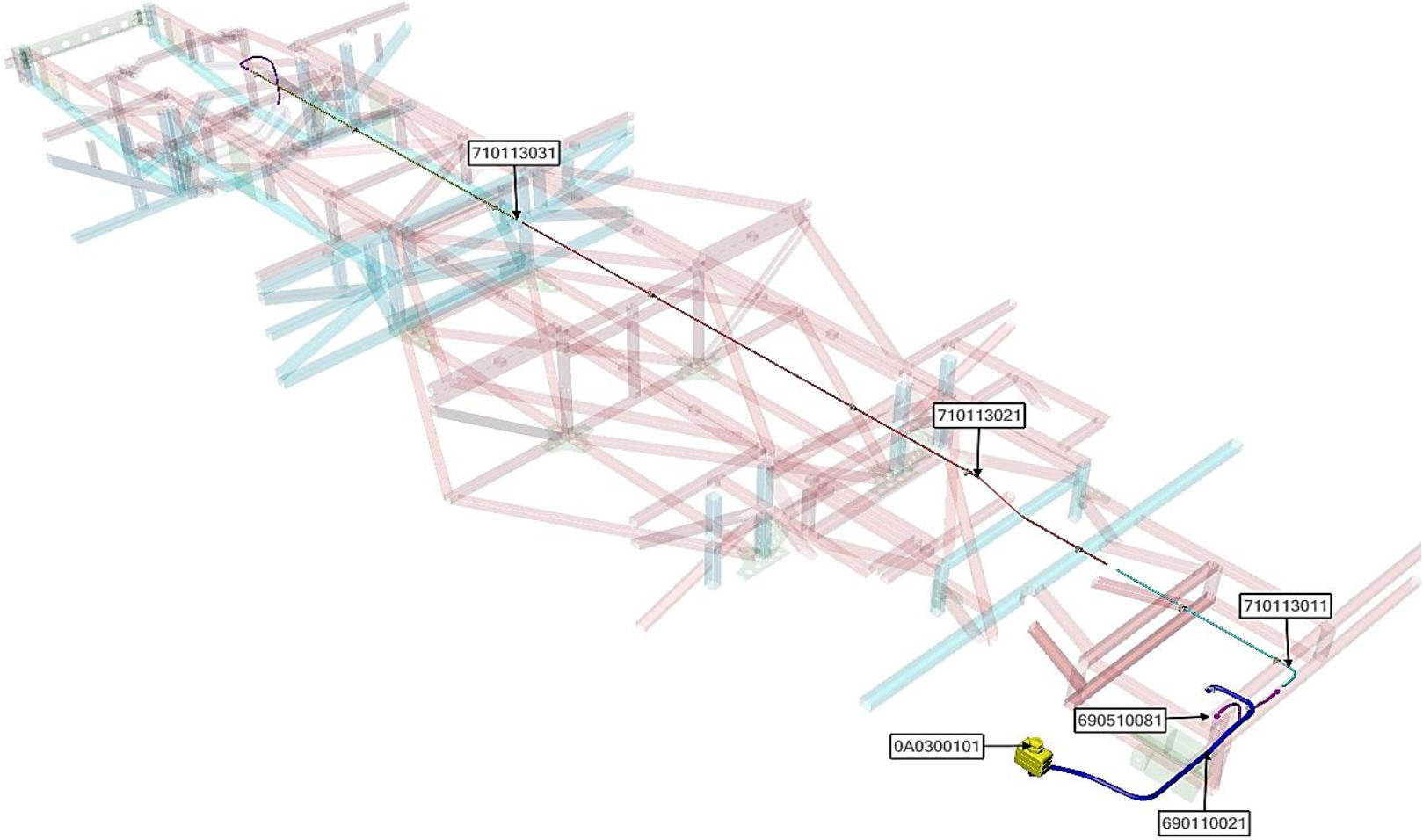

ASSB_NAME	PART NO.	NAME	QTY
HYDRAULIC PIPE ASSY	710113031	COPPER PIPE 03	1
	710113021	COPPER PIPE 02	1
	710113011	COPPER PIPE 01	1
	690510081	HYDRAULIC PIPE	2
	690110021	RUBBER PIPE	1
	0A0300101	CLUTCH OIL TANK	1

ASSB_NAME	PART NO.	NAME	QTY
HYDRAULIC PIPE ASSY			

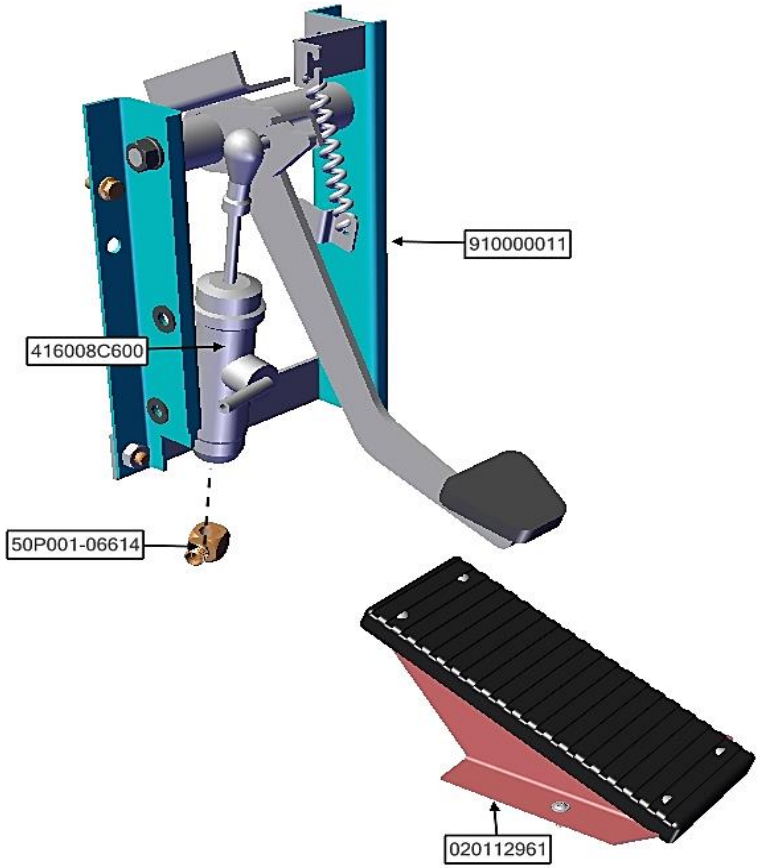

ASSB_NAME	PART NO.	NAME	QTY
CLUTCH PEDAL ASSY	50P001-06614	FUEL DISTRIBUTOR Ø14	1
	416008C600	CYLINDER	1
	020112961	CLUTCH PEDAL MOUNTING	1
	910000011	PEDAL MOUNTING	1

ASSB_NAME	PART NO.	NAME	QTY
CLUTCH PEDAL ASSY			

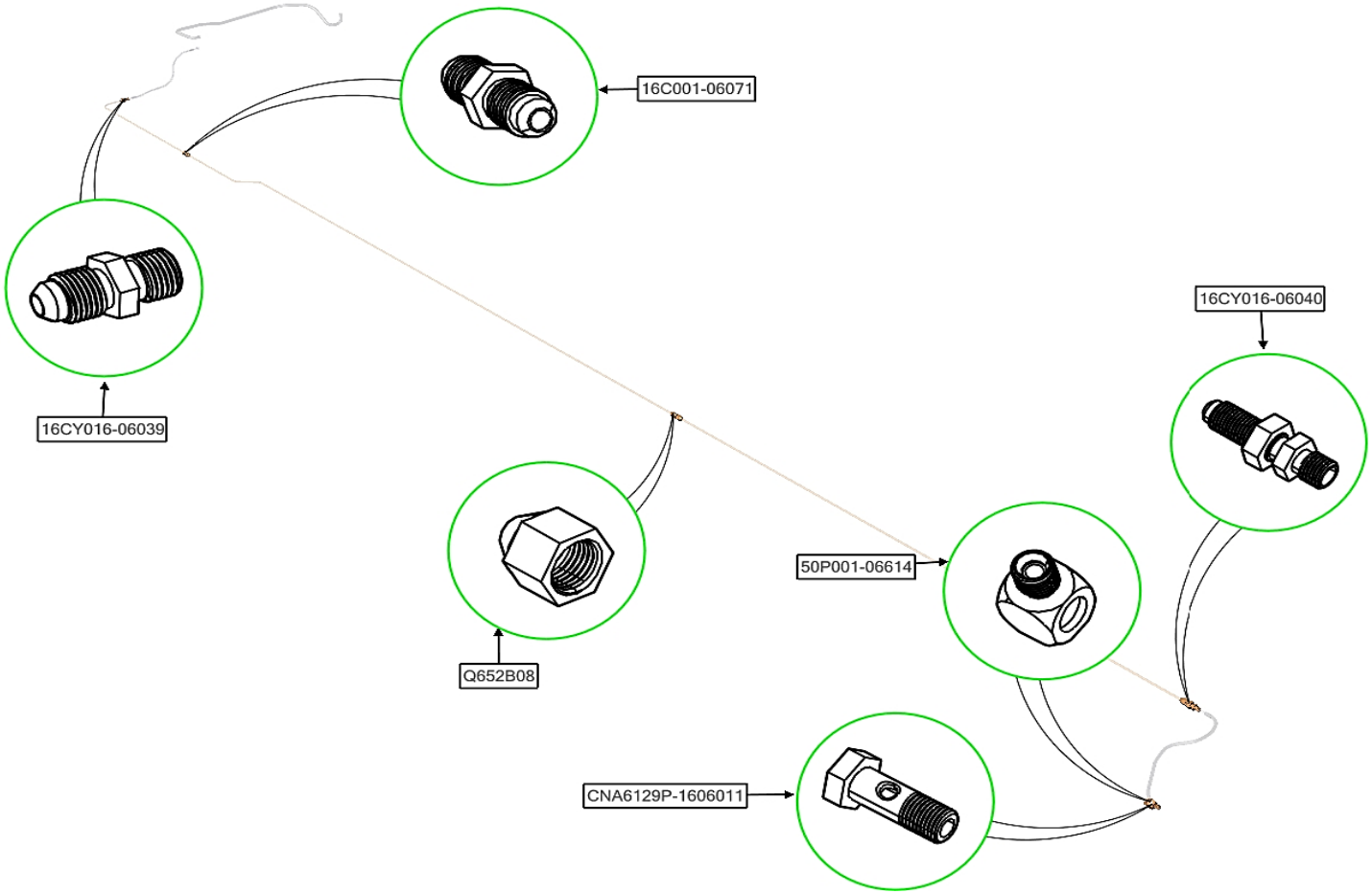

ASSB_NAME	PART NO.	NAME	QTY
CONNECTOR SYSTEM	50P001-06614	FUEL DISTRIBUTOR Ø14	1
	Q652B08	NUT M14	6
	16CY016-06040	CONNECTOR M14-M14	1
	16CY016-06039	CONNECTOR M14-M14	1
	16C001-06071	CONNECTOR M14-M14	2
	CNA6129P-1606011	HOLLOW BOLT M14	1

ASSB_NAME	PART NO.	NAME	QTY
CONNECTOR SYSTEM			

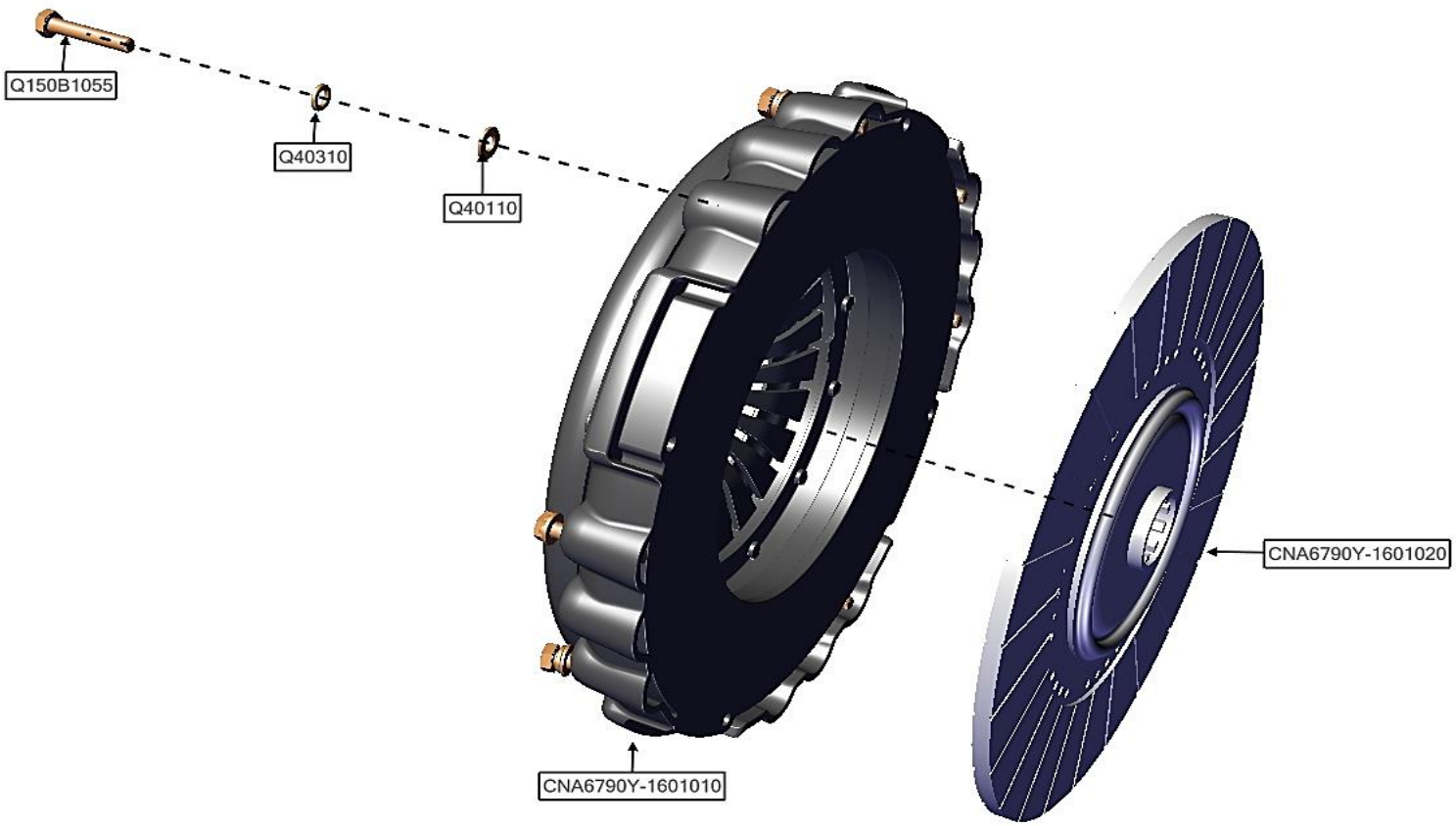

ASSB_NAME	PART NO.	NAME	QTY
MAIN CLUTCH	Q40310	SPLIT WASHER Ø10	8
	CNA6790Y-1601020	CLUTCH DISC ASSY	1
	Q40110	WASHER Ø10	8
	CNA6790Y-1601010	CLUTCH DISK	1
	Q150B1055	BOLT 10055150	8

ASSB_NAME	PART NO.	NAME	QTY
MAIN CLUTCH			

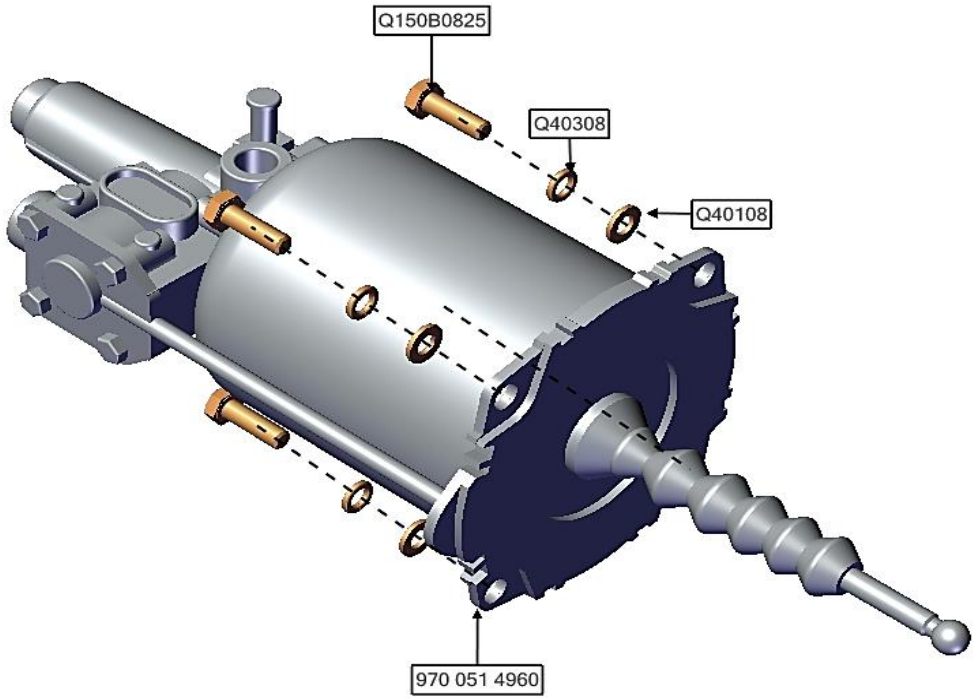

ASSB_NAME	PART NO.	NAME	QTY
THE POWER CLUTCH	Q40308	SPLIT WASHER Ø08	4
	Q40108	WASHER Ø08	4
	Q150B0825	BOLT 08025125	4
	970 051 4960	POWER CLUTCH BOX	1

ASSB_NAME	PART NO.	NAME	QTY
THE POWER CLUTCH			

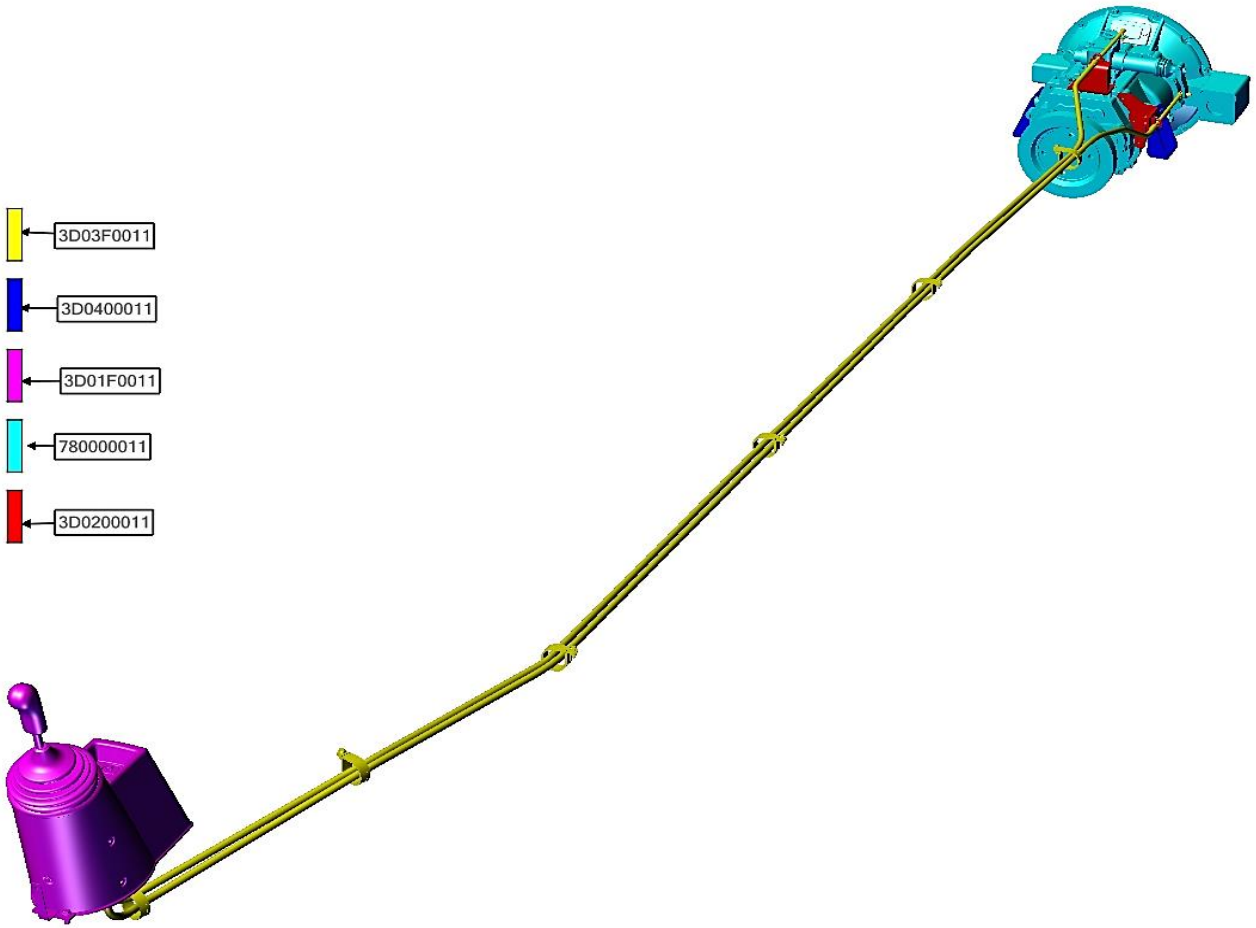

ASSB_NAME	PART NO.	NAME	QTY
GEAR BOX ASSY	3D0200011	SELECT CABLE ASSY	1
	780000011	GEAR BOX	1
	3D0400011	ENGINE RUBBER MOUNTING ASSY	1
	3D01F0011	CONTROLLING UNIT ASSY	1
	3D03F0011	SHIFT CABLE ASSY	1

ASSB_NAME	PART NO.	NAME	QTY
GEAR BOX ASSY			

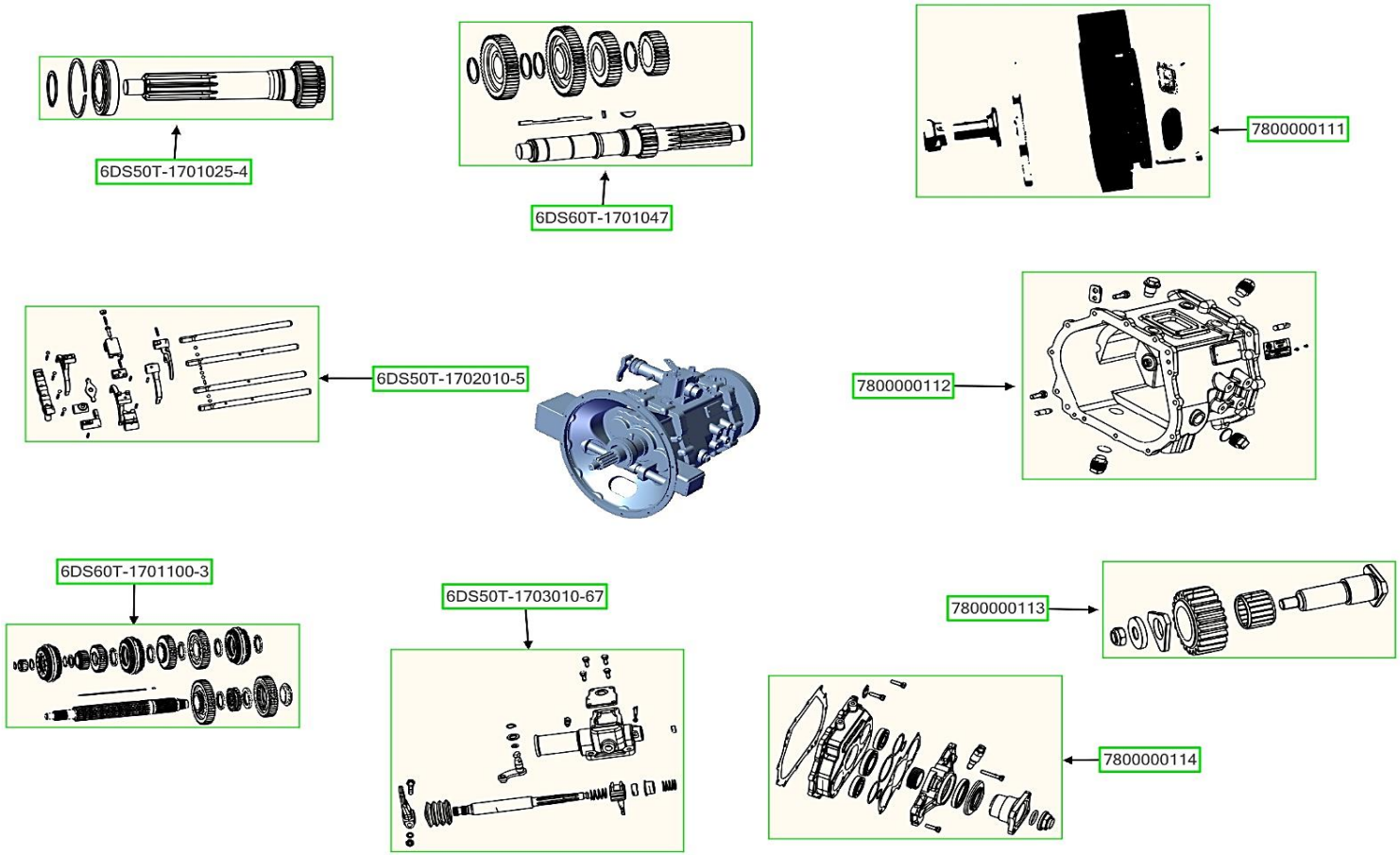

ASSB_NAME	PART NO.	NAME	QTY
CLUTCH	6DS50T-1701025-4	ONE-AXIS ASSY	1
	6DS60T-1701047	INTERMEDIATE SHAFT ASSY	1
	7800000111	CLUTCH HOUSING ASSY	1
	7800000112	TRANSMISSION HOUSING ASSY	1
	7800000113	REVERSE INTERMEDIATE SHAFT ASSY	1
	7800000114	BACK COVER ASSY	1
	6DS50T-1703010-67	DOUBLE LEVER LEFT OPERATING DEVICE ASSY	1

ASSB_NAME	PART NO.	NAME	QTY
CLUTCH	6DS60T-1701100-3	TWO-AXIS ASSY	1
	6DS50T-1702010-5	FORKLIFT ASSY	1

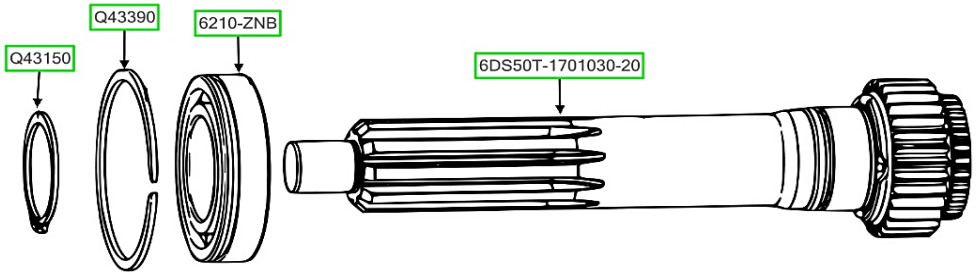

ASSB_NAME	PART NO.	NAME	QTY
ONE-AXIS ASSEMBLY	Q43150	SHAFT WITH ELASTIC RING	1
	Q43390	FLATTENED WIRE RETAINING RING FOR SHAFT	1
	6210-ZNB	DEEP GROOVE BALL BEARING	1
	6DS50T-1701030-20	ONE AXIS	1

ASSB_NAME	PART NO.	NAME	QTY
ONE-AXIS ASSEMBLY			

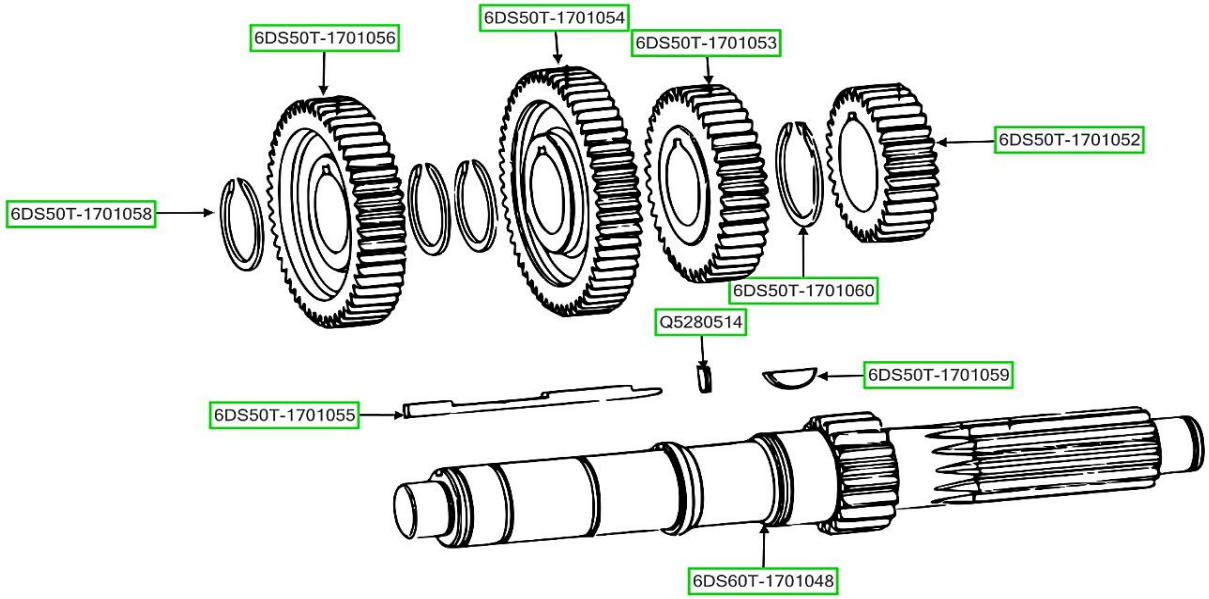

ASSB_NAME	PART NO.	NAME	QTY
INTERMEDIATE SHAFT ASSEMBLY	6DS50T-1701058	STOP RING	6
	6DS50T-1701056	INTERMEDIATE SHAFT TRANSMISSION GEAR	2
	6DS50T-1701054	INTERMEDIATE SHAFT OVERDRIVE GEAR	2
	6DS50T-1701053	INTERMEDIATE SHAFT FOURTH GEAR	2
	6DS50T-1701060	STOP RING	2
	6DS50T-1701052	INTERMEDIATE SHAFT THIRD GEAR	2
	6DS50T-1701055	INTERMEDIATE AXIS SQUARE BUTTON	2

ASSB_NAME	PART NO.	NAME	QTY
INTERMEDIATE SHAFT ASSEMBLY	Q5280514	ELASTIC CYLINDRICAL PIN	2
	6DS50T-1701059	SEMICIRCLE KEY	2
	6DS60T-1701048	INTERMEDIATE SHAFT	2

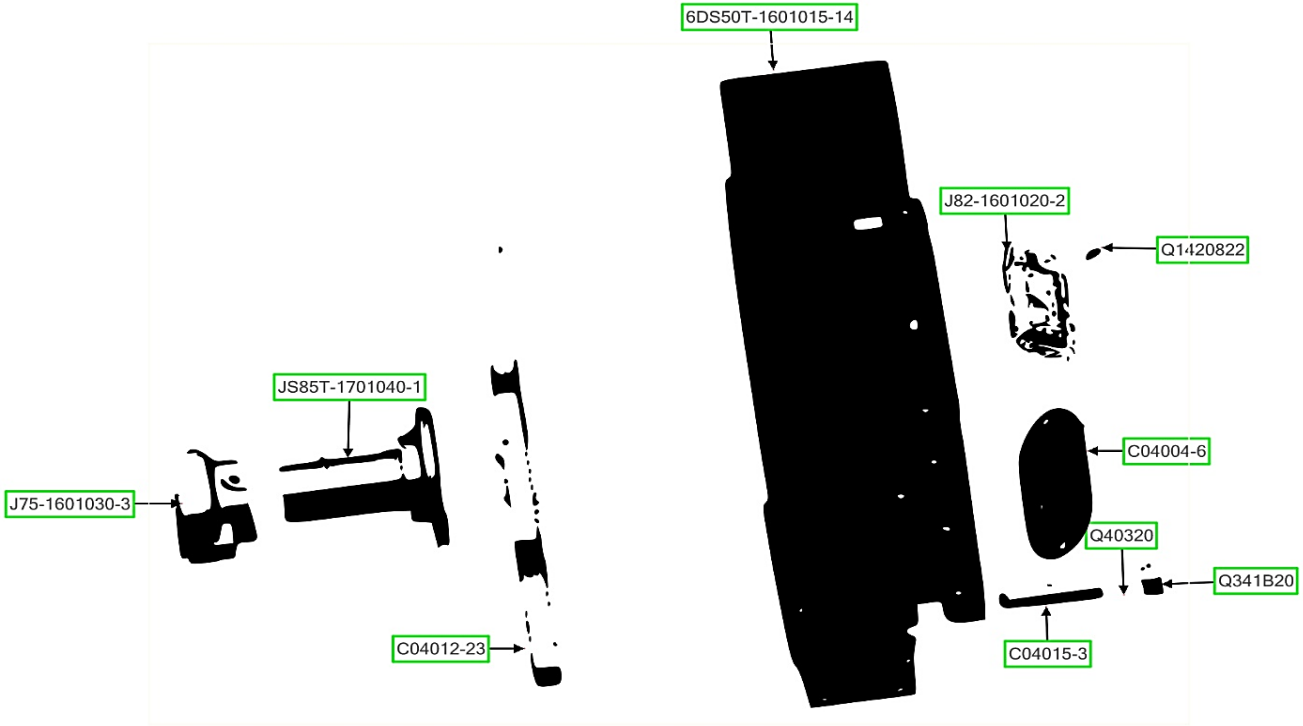

ASSB_NAME	PART NO.	NAME	QTY
CLUTCH HOUSING ASSEMBLY	J75-1601030-3	RELEASE BEARING	1
	JS85T-1701040-1	ONE SHAFT BEARING CAP	1
	C04012-23	SEPARATE FORK	1
	6DS50T-1601015-14	CLUTCH HOUSING	1
	J82-1601020-2	WINDOW COVER	1
	Q1420822	BOLTED SPRING PAD ASSEMBLY	4
	C04004-6	HAND HOLE COVER	1

ASSB_NAME	PART NO.	NAME	QTY
CLUTCH HOUSING ASSEMBLY	Q341B20	NUT	1
	C04015-3	SEPARATION PILLAR	1
	Q40320	SPRING PAD	1

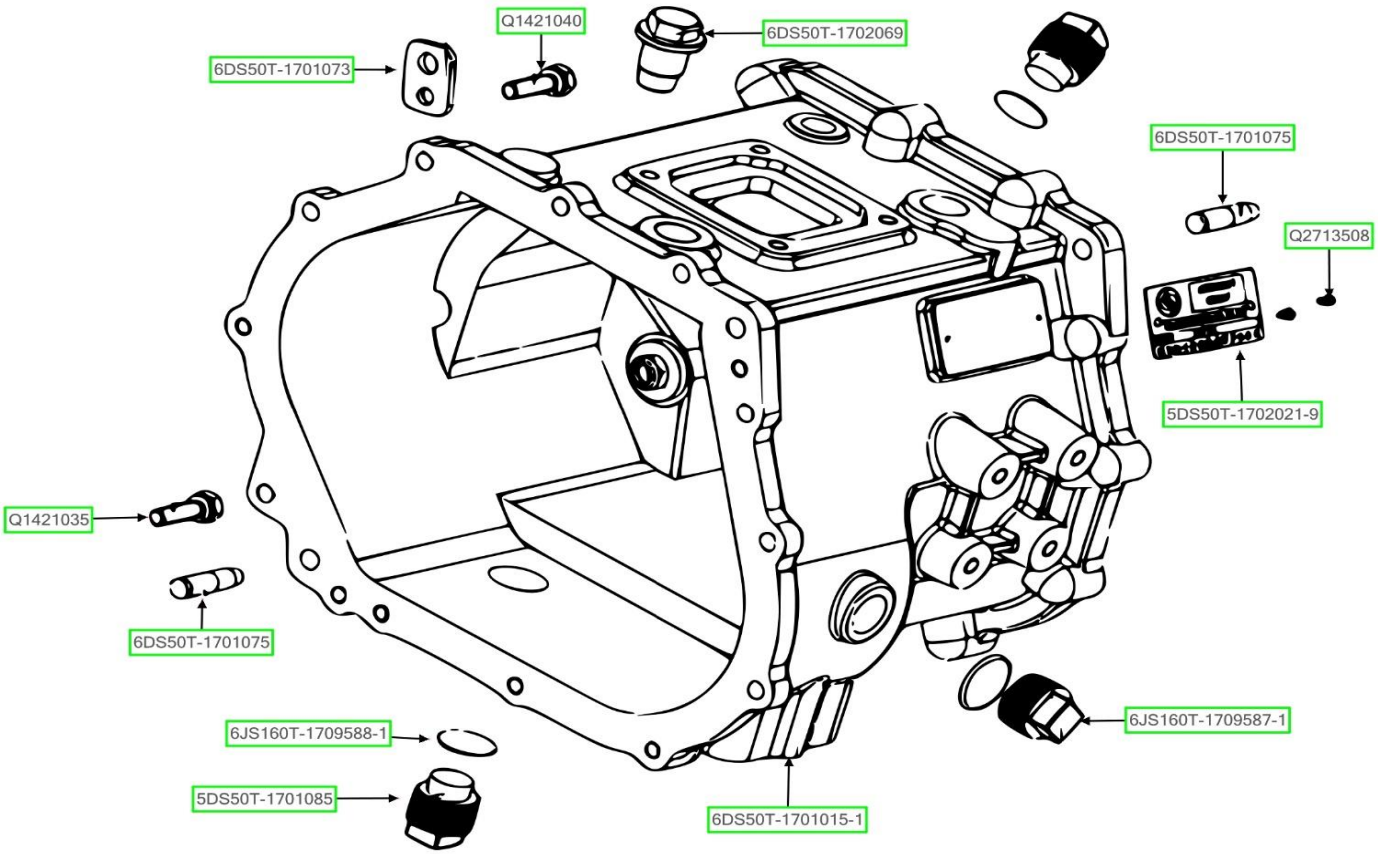

ASSB_NAME	PART NO.	NAME	QTY
TRANSMISSION HOUSING ASSEMBLY	6DS50T-1701075	LOCATING PIN	4
	5DS50T-1701085	OIL PLUG AND MAGNET SUB-ASSEMBLY	1
	6JS160T-1709588-1	O-RING	3
	6DS50T-1701015-1	TRANSMISSION HOUSING	1
	6JS160T-1709587-1	OIL PLUG	2
	5DS50T-1702021-9	SIGNAGE	1
	Q2713508	CROSS RECESSED PAN HEAD TAPPING SCREWS	2

ASSB_NAME	PART NO.	NAME	QTY
TRANSMISSION HOUSING ASSEMBLY	6DS50T-1701073	HANGING EAR	1
	Q1421040	HEX HEAD BOLT AND SPRING WASHER ASSY	1
	6DS50T-1702069	POSITIONING SCREW	1
	Q1421035	HEX HEAD BOLT AND SPRING WASHER ASSY	9

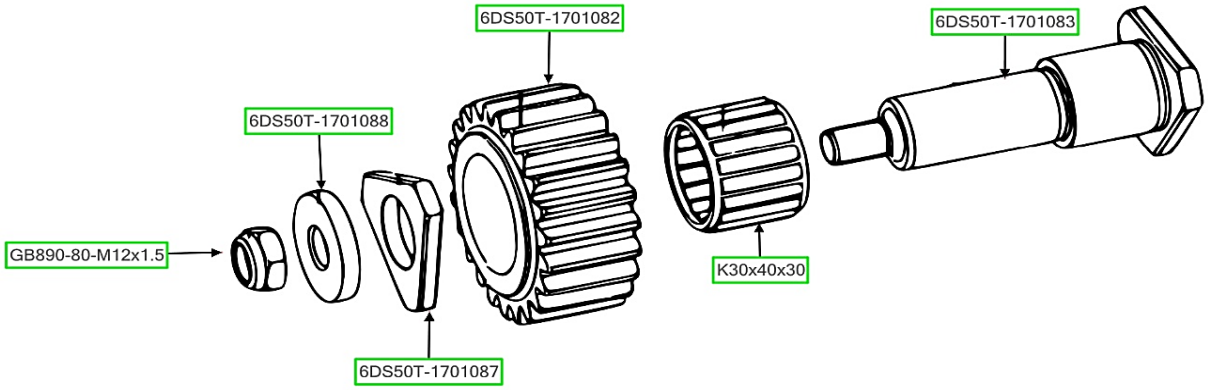

ASSB_NAME	PART NO.	NAME	QTY
REVERSE INTERMEDIATE SHAFT ASSY	GB890-80-M12x1.5	HEXAGONAL NYLON RING LOCKING THIN NUT	2
	6DS50T-1701088	REVERSE LOCK WASHER	2
	6DS50T-1701087	REVERSE THRUST WASHER	2
	6DS50T-1701082	REVERSE GEAR	2
	K30x40x30	NEEDLE BEARING	2
	6DS50T-1701083	REVERSE INTERMEDIATE SHAFT	2

ASSB_NAME	PART NO.	NAME	QTY
REVERSE INTERMEDIATE SHAFT ASSY			

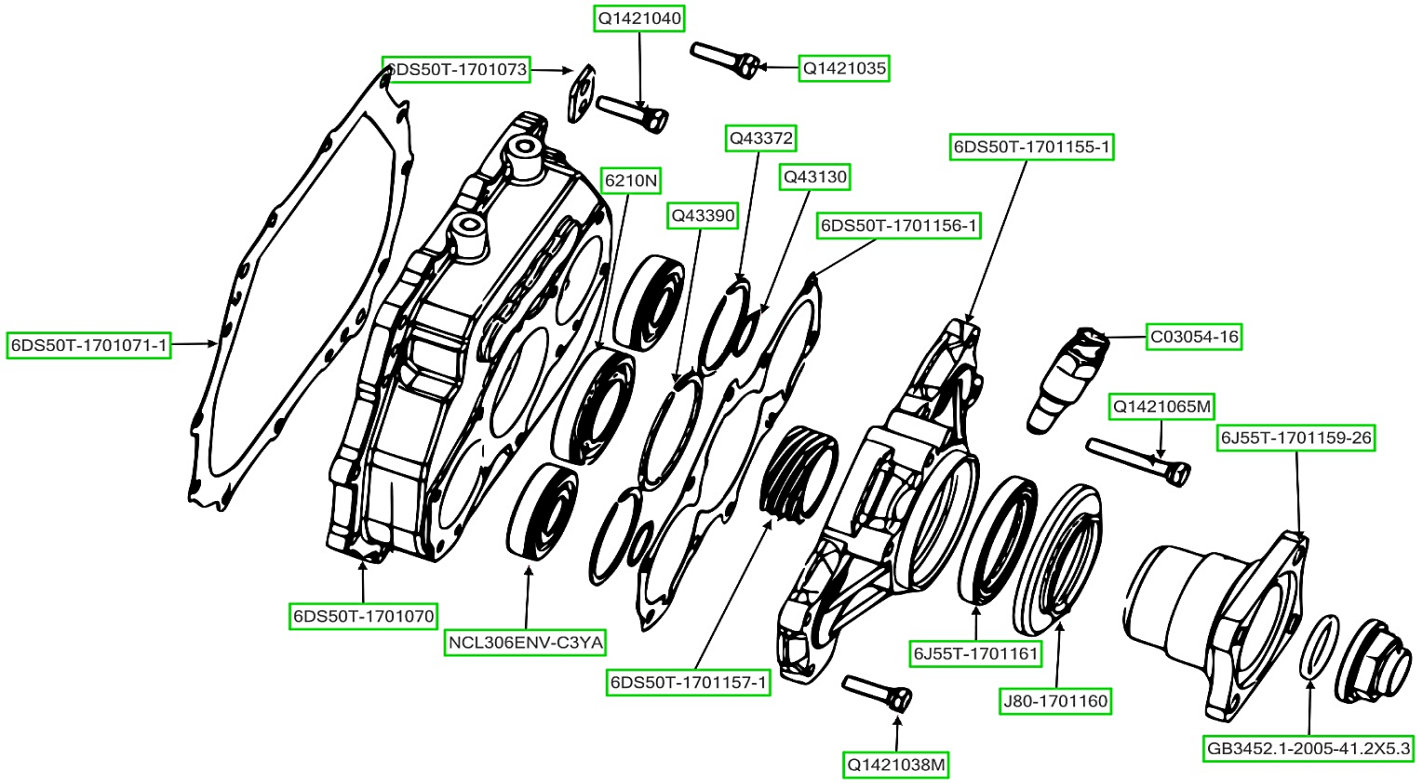

ASSB_NAME	PART NO.	NAME	QTY
BACK COVER ASSEMBLY	6DS50T-1701071-1	TRANSMISSION REAR COVER GASKET	1
	6DS50T-1701070	TRANSMISSION BACK COVER	1
	NCL306ENV-C3YA	CYLINDRICAL ROLLER BEARINGS	2
	6210N	DEEP GROOVE BALL BEARING WITH SNAP GROOVE ON OUTER RING	1
	Q43390	FLATTENED WIRE RETAINING RING FOR SHAFT	1
	6DS50T-1701157-1	ODOMETER ROTOR	1
	Q1421038M	PRE-COATED HEX HEAD BOLT AND SPRING WASHER ASSEMBLY	6

ASSB_NAME	PART NO.	NAME	QTY
BACK COVER ASSEMBLY	6J55T-1701161	REAR BEARING CAP OIL SEAL	1
	GB3452.1-2005-41.2X5.3	O-RING	1
	6J55T-1701159-26	FLANGE	1
	Q1421065M	PRE-COATED HEX HEAD BOLT AND SPRING WASHER ASSEMBLY	4
	C03054-16	ELECTRONIC ODOMETER SENSOR ASSEMBLY	1
	6DS50T-1701155-1	TWO-AXIS REAR BEARING CAP	1
	J80-1701160	DUST COVER	1

CODE_ASSB	PART NO.	NAME	QTY
BACK COVER ASSEMBLY	6DS50T-1701156-1	TWO-SHAFT REAR BEARING CAP GASKET	1
	Q43372	FLATTENED WIRE RETAINING RING FOR SHAFT	2
	Q43130	SHAFT WITH ELASTIC RING	2
	Q1421035	HEX HEAD BOLT AND SPRING WASHER ASSEMBLY	11
	Q1421040	HEX HEAD BOLT AND SPRING WASHER ASSEMBLY	1
	6DS50T-1701073	HANGING EAR	1

CODE_ASSB	PART NO.	NAME	QTY
BACK COVER ASSEMBLY			

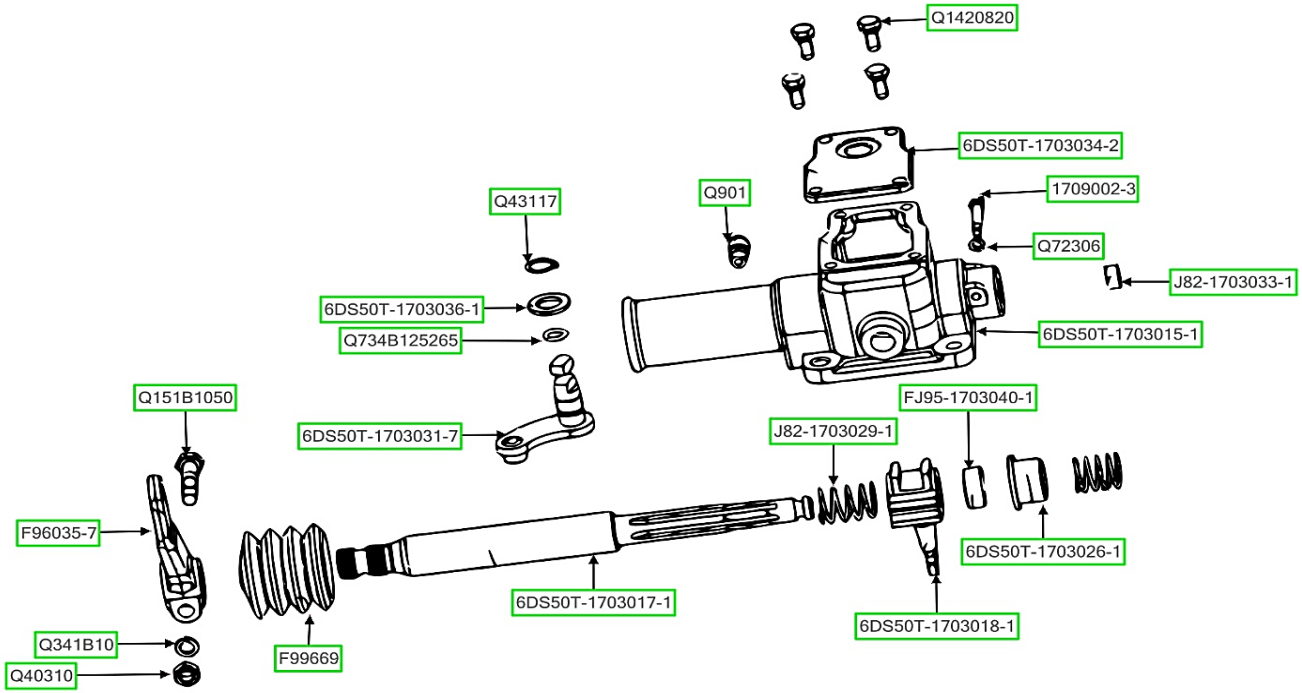

ASSB_NAME	PART NO.	NAME	QTY
DOUBLE LEVER LEFT OPERATING DEVICE ASSEMBLY	Q1420820	HEX HEAD BOLT AND SPRING WASHER ASSEMBLY	4
	6DS50T-1703034-2	WINDOW COVER	1
	6DS50T-1703035-2	WINDOW COVER LINER	1
	6DS50T-1703015-1	MANIPULATOR HOUSING	1
	Q901	NORMALLY OPEN VENT PLUG	1
	1709002-3	HEX HEAD BOLT	1
	Q72306	GASKET	1

ASSB_NAME	PART NO.	NAME	QTY
DOUBLE LEVER LEFT OPERATING DEVICE ASSEMBLY	J82-1703033-1	BOWL TYPE PLUG	1
	Q43117	SHAFT CIRCLIP	1
	6DS50T-1703036-1	SMALL WASHER	1
	Q734B125265	O-RING	1
	6DS50T-1703031-7	GEAR SELECTION SHAFT ASSEMBLY	1
	Q151B1050	HEX HEAD BOLT	1
	F96035-7	SHIFT ROCKER	1

CODE_ASSB	PART NO.	NAME	QTY
DOUBLE LEVER LEFT OPERATING DEVICE ASSEMBLY	Q341B10	TYPE 1 HEX NUT	1
	Q40310	SPRING WASHER	1
	F99669	SET	1
	6DS50T-1703017-1	LATERAL SHIFT LEVER	1
	F91444	OIL SEAL	1
	F91345	LATERAL SHIFTER BUSHING	1
	J82-1703029-1	LIMIT SPRING	2
	6DS50T-1703018-1	DIAL	1
	FJ95-1703040-1	SPRING SEAT	1
	6DS50T-1703026-1	SPRING SEAT	1

CODE_ASSB	PART NO.	NAME	QTY
DOUBLE LEVER LEFT OPERATING DEVICE ASSEMBLY			

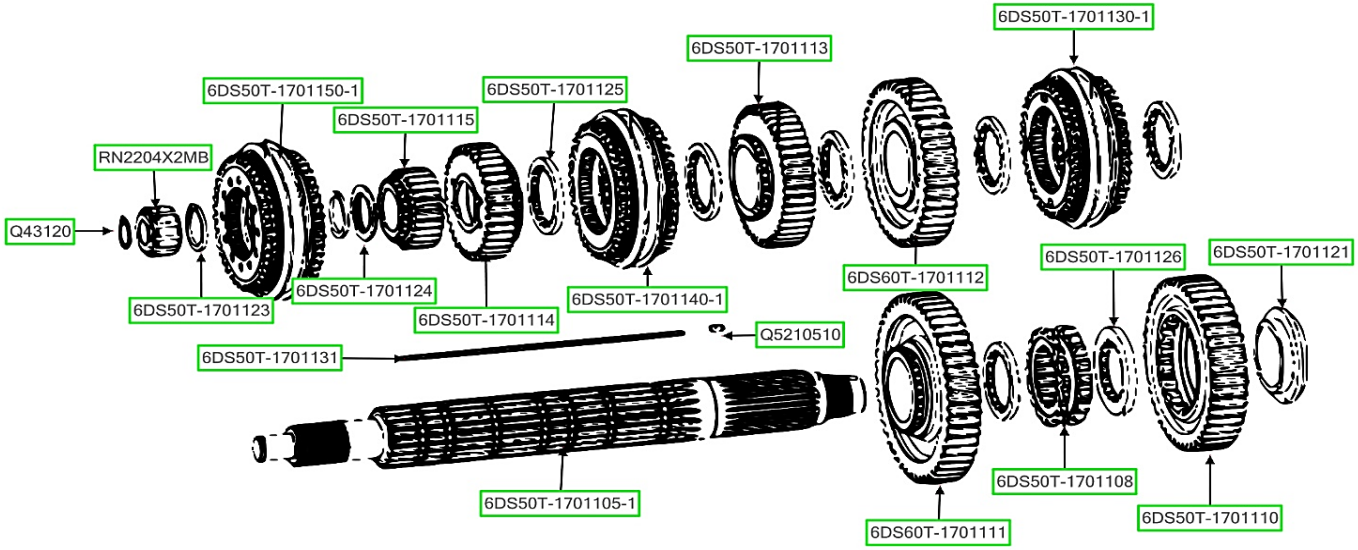

ASSB_NAME	PART NO.	NAME	QTY
TWO-AXIS ASSEMBLY	Q43120	SHAFT WITH ELASTIC RING	1
	RN2204X2MB	CYLINDRICAL ROLLER BEARING WITHOUT OUTER RING	1
	6DS50T-1701123	STOP RING	2
	6DS50T-1701150-1	FIVE OR SIX SPEED SYNCHRONIZER ASSEMBLY	1
	6DS50T-1701124	OVERDRIVE GEAR SPLINE PAD	1
	6DS50T-1701115	TWO-AXIS OVERDRIVE GEAR	1
	6DS50T-1701114	TWO-AXIS FOUR-SPEED GEAR	1

ASSB_NAME	PART NO.	NAME	QTY
TWO-AXIS ASSEMBLY	6DS50T-1701125	SPLINE GASKET	6
	6DS50T-1701140-1	THREE-FOUR-SPEED SYNCHRONIZER ASSEMBLY	1
	6DS50T-1701113	TWO-AXIS THREE-SPEED GEAR	1
	6DS60T-1701112	TWO-AXIS SECOND GEAR	1
	6DS50T-1701130-1	ONE-SECOND SYNCHRONIZER ASSEMBLY	1
	6DS50T-1701131	TWO-AXIS LONG HEX KEY	1
	Q5210510	CYLINDRICAL PIN	1

CODE_ASSB	PART NO.	NAME	QTY
TWO-AXIS ASSEMBLY	6DS50T-1701105-1	TWO AXES	1
	6DS60T-1701111	TWO-AXIS FIRST GEAR	1
	6DS50T-1701108	TWO-AXIS REVERSE SLIDING SLEEVE	1
	6DS50T-1701126	TWO-AXIS REVERSE GEAR SPLINE GASKET	1
	6DS50T-1701110	TWO-AXIS REVERSE GEAR	1
	6DS50T-1701121	TWO-AXIS REVERSE GEAR BAFFLE	1

CODE_ASSB	PART NO.	NAME	QTY
TWO-AXIS ASSEMBLY			

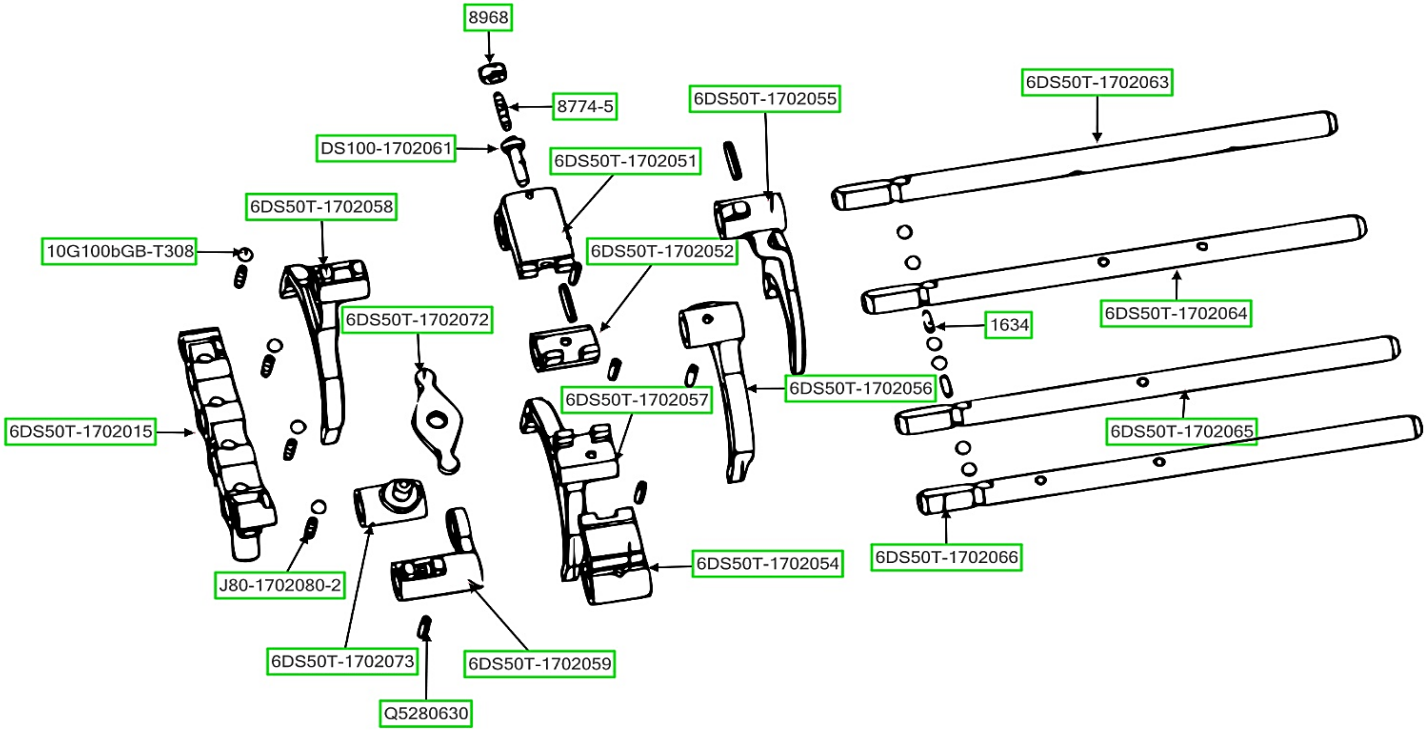

ASSB_NAME	PART NO.	NAME	QTY
FORKLIFT ASSEMBLY	6DS50T-1702015	FORK HOLDER	1
	J80-1702080-2	POSITIONING SPRING	4
	6DS50T-1702073	SUPPORT SHAFT PIN	1
	Q5280630	ELASTIC CYLINDRICAL PIN	7
	6DS50T-1702059	FIVE OR SIX FILES CHANGE GUIDE BLOCK	1
	6DS50T-1702057	THREE OR FOUR SHIFT FORK	1
	6DS50T-1702054	FIVE OR SIX GUIDE BLOCKS	1

ASSB_NAME	PART NO.	NAME	QTY
FORKLIFT ASSEMBLY	6DS50T-1702056	ONE OR TWO SHIFT FORK	1
	6DS50T-1702066	FIVE OR SIX SHIFT FORK SHAFT	1
	1634	FORK SHAFT INTERLOCKING PIN	2
	6DS50T-1702065	THREE OR FOUR SHIFT FORK SHAFT	1
	6DS50T-1702064	ONE OR TWO SHIFT FORK SHAFT	1
	6DS50T-1702063	REVERSE FORK SHAFT	1
	6DS50T-1702055	REVERSE SHIFT FORK	1

CODE_ASSB	PART NO.	NAME	QTY
FORKLIFT ASSEMBLY	6DS50T-1702051	REVERSE GUIDE BLOCK	1
	DS100-1702061	REVERSE LOCK PLUNGER	1
	8774-5	REVERSE LOCK SPRING	1
	8968	REVERSE LOCK SCREW	1
	6DS50T-1702052	ONE OR TWO GUIDE BLOCKS	1
	6DS50T-1702072	SWINGING HEAD	1
	6DS50T-1702058	FIVE OR SIX SHIFT FORK	1
	10G100bGB-T308	STEEL BALL	10

CODE_ASSB	PART NO.	NAME	QTY
FORKLIFT ASSEMBLY			

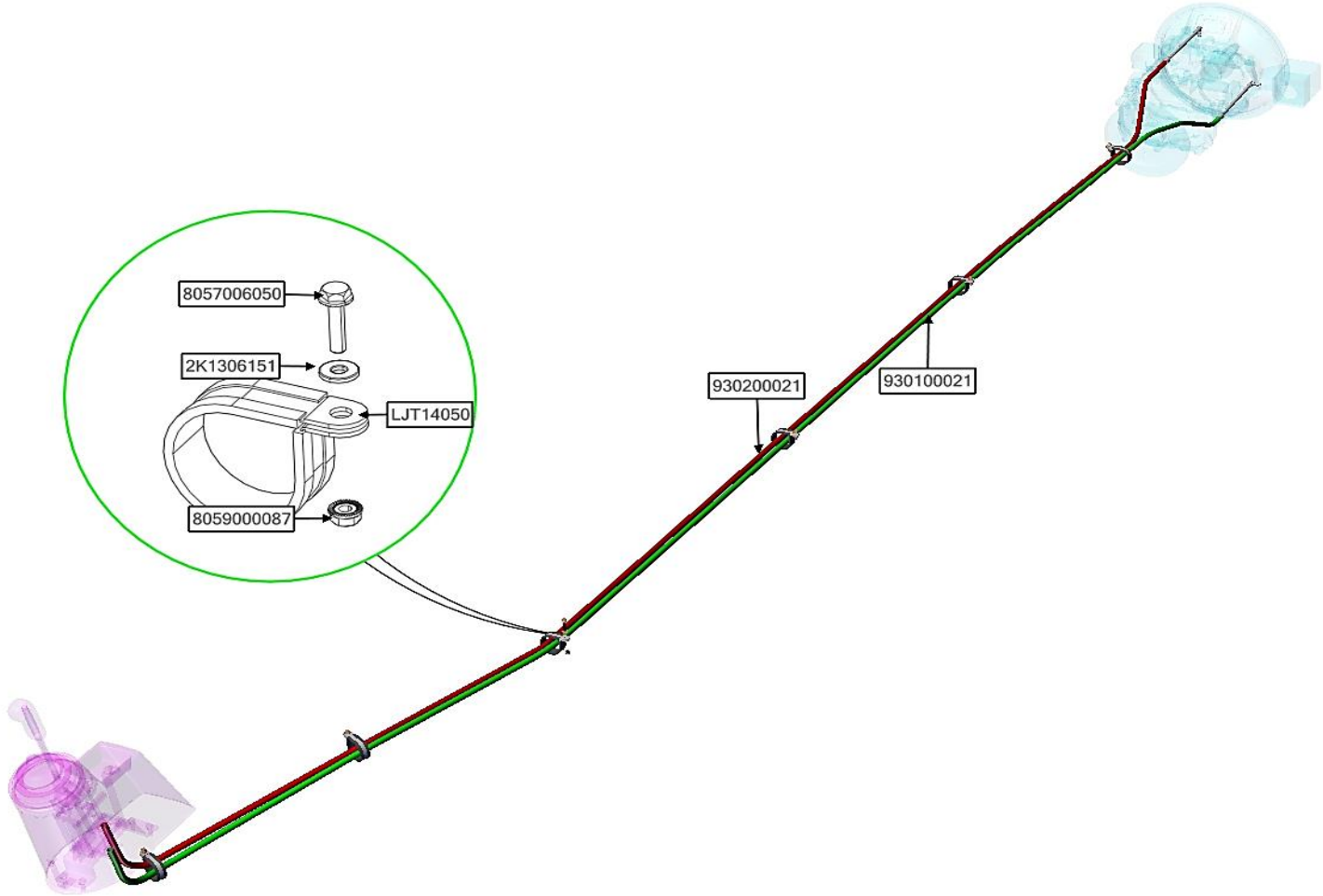

ASSB_NAME	PART NO.	NAME	QTY
SHIFT CABLE ASSY	8059000087	NUT 06100	6
	2K1306151	WASHER Ø06	6
	LJT14050	CLIP Ø50	6
	930100021	SHIFT CABLE ASSY	1
	930200021	SELECT CABLE ASSY	1
	8057006050	BOLT 06025100	6

ASSB_NAME	PART NO.	NAME	QTY
SHIFT CABLE ASSY			

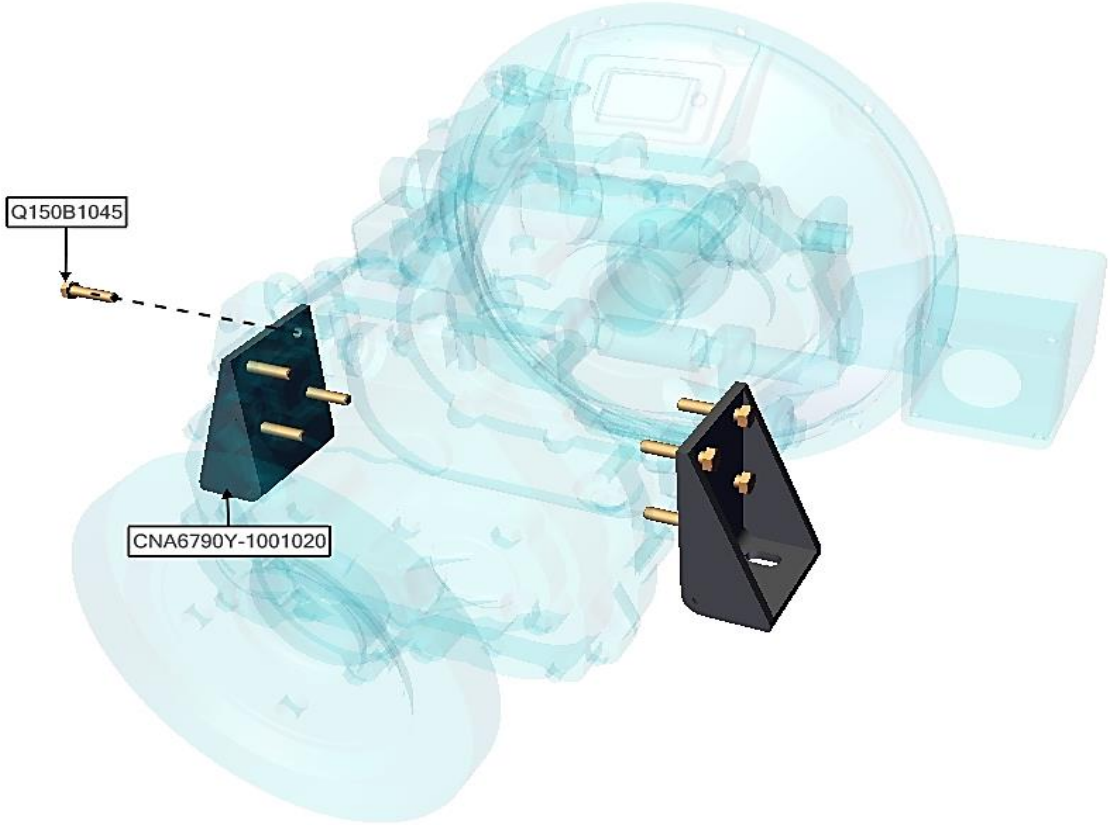

ASSB_NAME	PART NO.	NAME	QTY
ENGINE RUBBER MOUNTING ASSY	CNA6790Y-1001020	REAR ENGINE FOOT	2
	Q150B1045	BOLT 10045150	8

ASSB_NAME	PART NO.	NAME	QTY
ENGINE RUBBER MOUNTING ASSY			

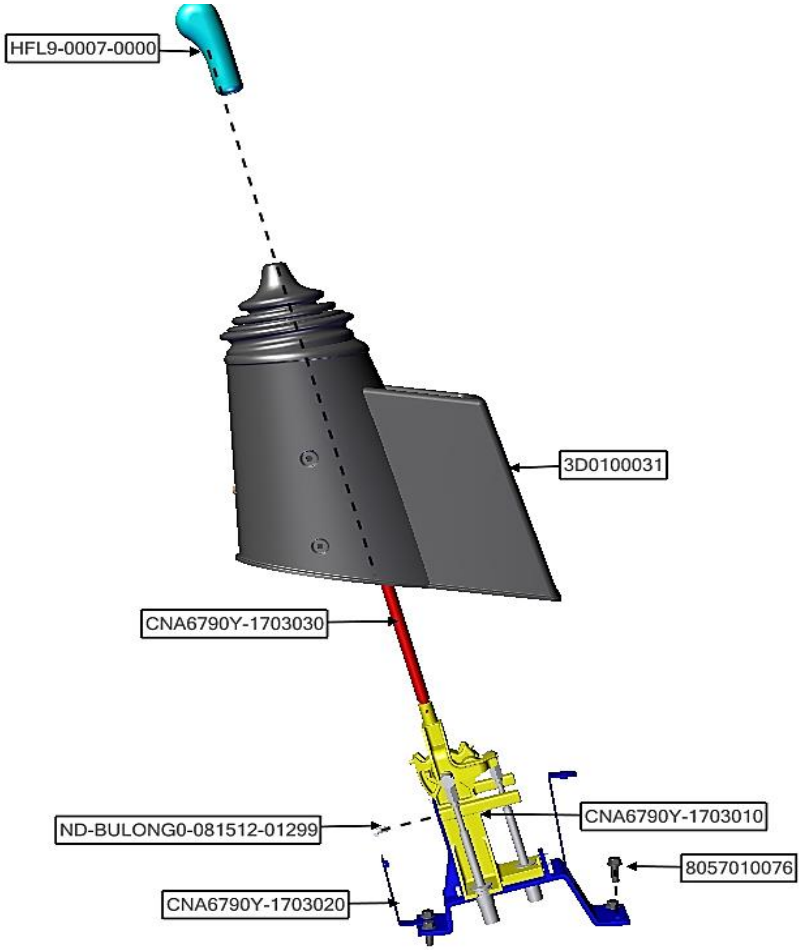

ASSB_NAME	PART NO.	NAME	QTY
CONTROLLING UNIT ASSY	CNA6790Y-1703030	SHIFT SHAFT	1
	HFL9-0007-0000	SHIFT HANDLE	1
	CNA6790Y-1703020	SHIFT LEVER BRACKET	1
	3D0100031	SHIFTING COVER	1
	CNA6790Y-1703010	SHIFT CONTROLLING ASSY	1
	8057010076	BOLT 10045125	4
	ND-BULONG0-081512-01299	BOLT 08015125	6

ASSB_NAME	PART NO.	NAME	QTY
CONTROLLING UNIT ASSY			

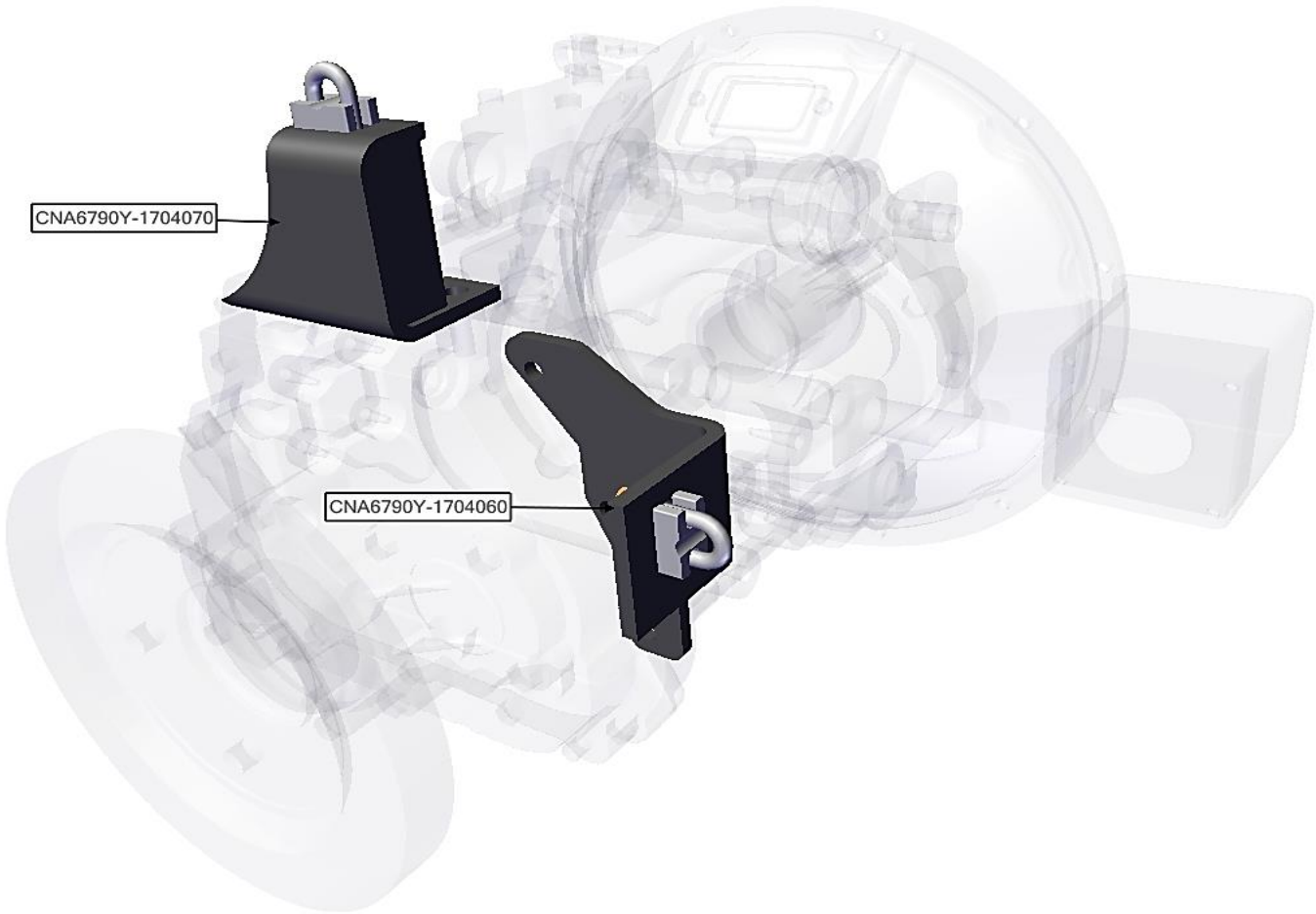

ASSB_NAME	PART NO.	NAME	QTY
SELECT CABLE ASSY	CNA6790Y-1704070	SELECT CABLE BRACKET	1
	CNA6790Y-1704060	SELECT CABLE BRACKET	1

ASSB_NAME	PART NO.	NAME	QTY
SELECT CABLE ASSY			

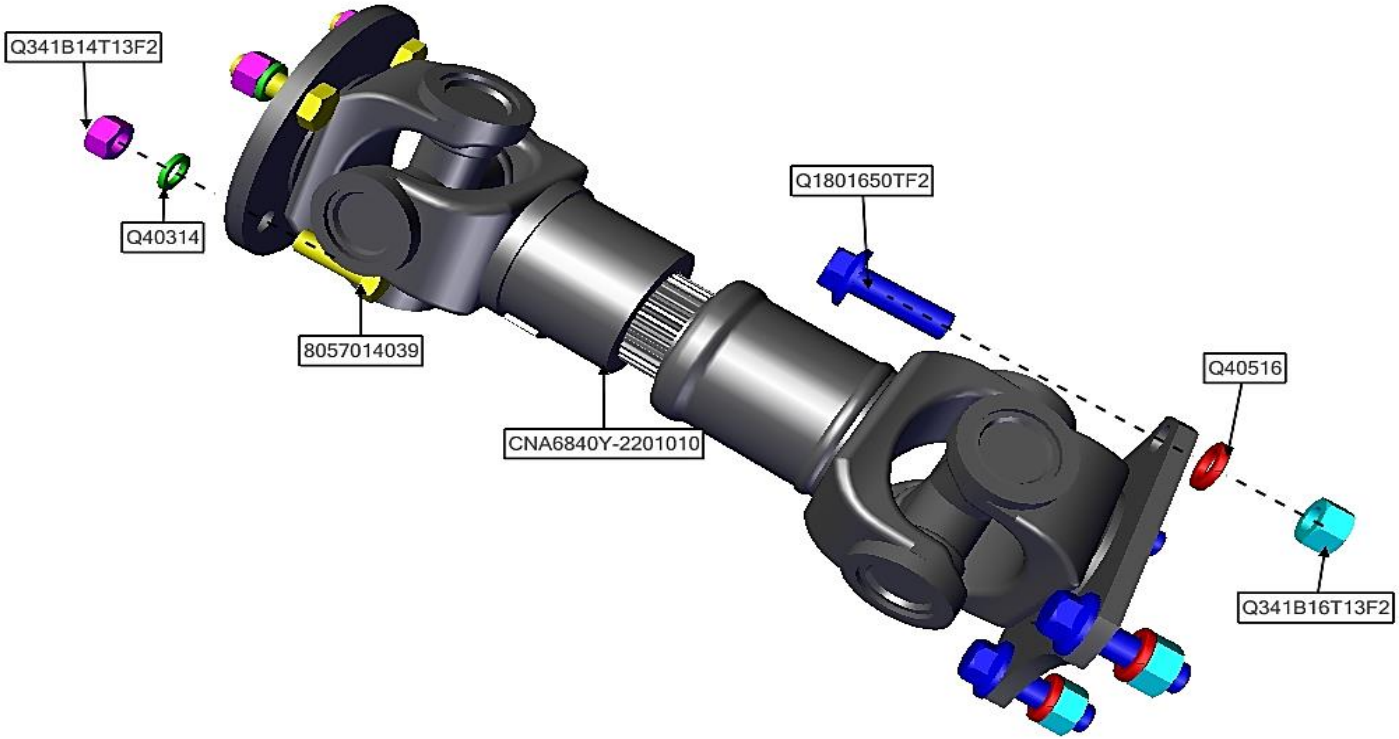

ASSB_NAME	PART NO.	NAME	QTY
PROPELLER ASSY	Q40516	ĐỆM VÊNH Ø16	4
	Q40314	SPLIT WASHER Ø14	4
	Q341B16T13F2	NUT 16150	4
	Q341B14T13F2	NUT 14150	4
	CNA6840Y-2201010	PROPELLER SHAFT	1
	Q1801650TF2	BOLT 16050150	4
	8057014039	BOLT 14040150	4

ASSB_NAME	PART NO.	NAME	QTY
PROPELLER ASSY			

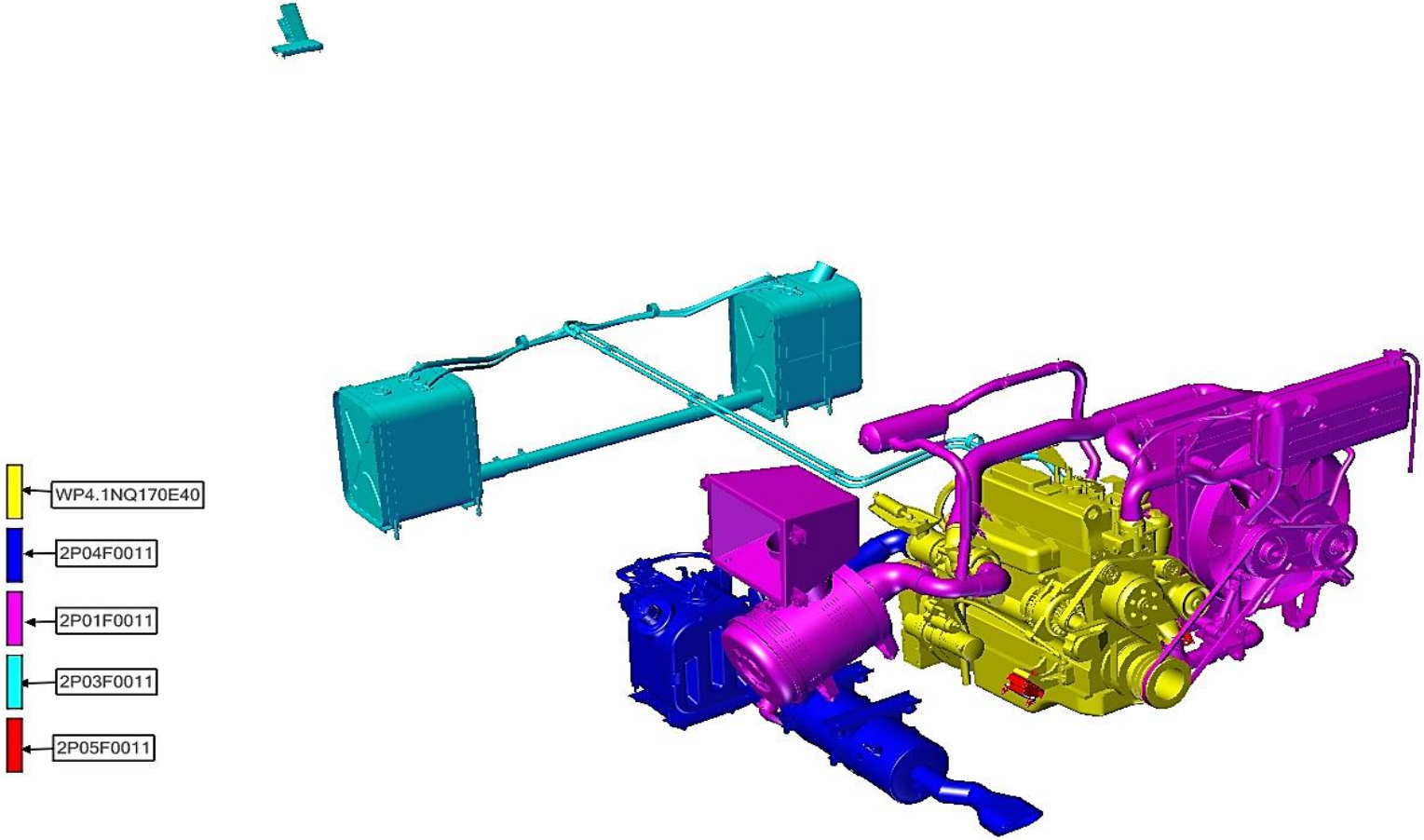

ASSB_NAME	PART NO.	NAME	QTY
DIESEL ENGINE ASSY	WP4.1NQ170E40	ENGINE	1
	2P03F0011	FUEL SYSTEM	1
	2P01F0011	COOLING SYSTEM	1
	2P04F0011	EXHAUST AIR SYSTEM	1
	2P05F0011	MINOR ITEMS	1

ASSB_NAME	PART NO.	NAME	QTY
DIESEL ENGINE ASSY			

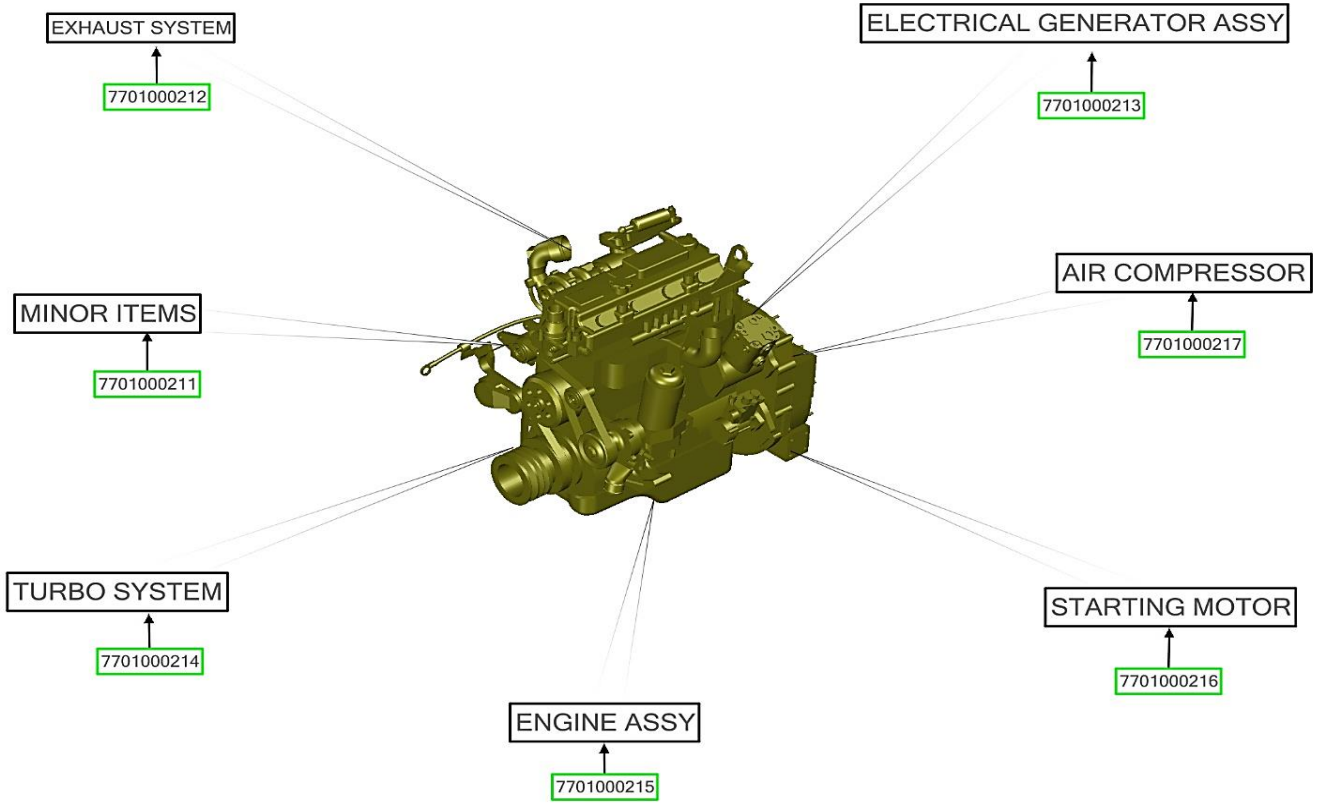

ASSB_NAME	PART NO.	NAME	QTY
ENGINE	7701000211	MINOR ITEMS	1
	7701000212	EXHAUST SYSTEM	1
	7701000213	ELECTRICAL GENERATOR ASSY	1
	7701000214	TURBO SYSTEM	1
	7701000215	ENGINE ASSY	1
	7701000216	STARTING MOTOR	1
	7701000217	AIR COMPRESSOR	1

ASSB_NAME	PART NO.	NAME	QTY
ENGINE			

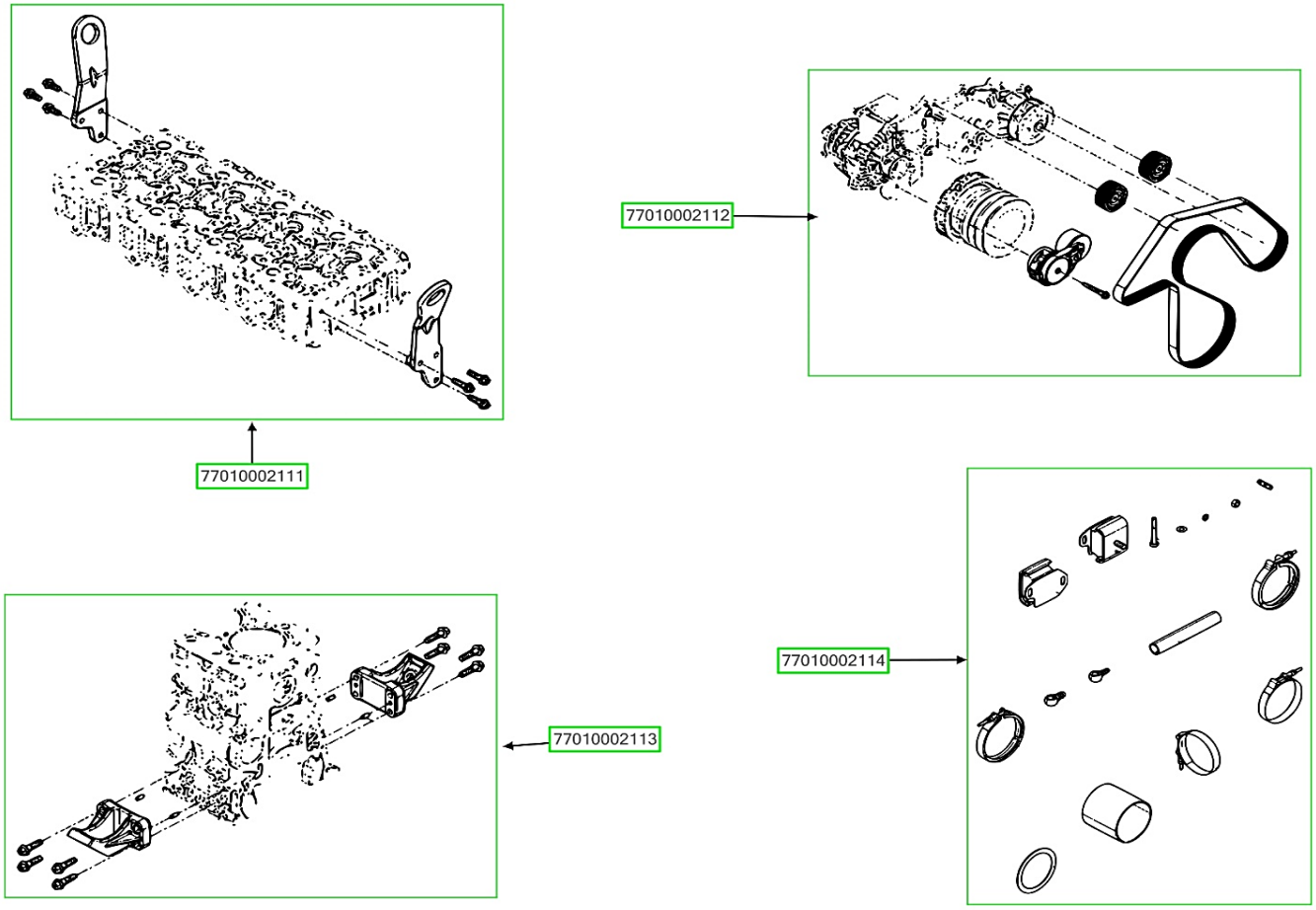

ASSB_NAME	PART NO.	NAME	QTY
MINOR ITEMS	77010002111	EYE RING GROUP	1
	77010002112	TENSIONER AND BELT GROUP	1
	77010002113	ENGINE BRACKET GROUP	1
	77010002114	PARTS BOX GROUP	1

ASSB_NAME	PART NO.	NAME	QTY
MINOR ITEMS			

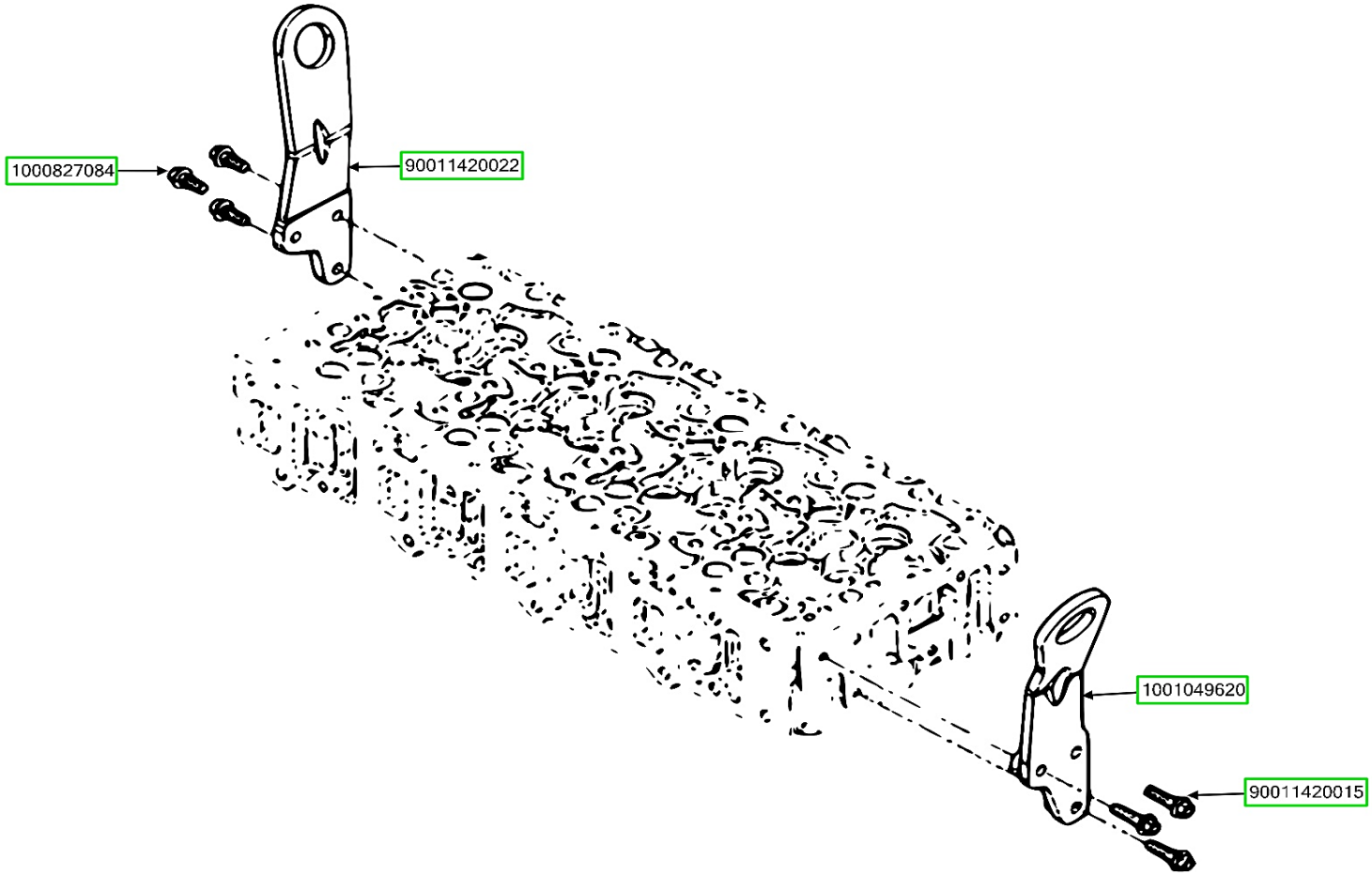

ASSB_NAME	PART NO.	NAME	QTY
EYE RING GROUP	1000827084	EYE RING GROUP	1
	90011420022	TENSIONER AND BELT GROUP	3
	1001049620	ENGINE BRACKET GROUP	1
	90011420015	PARTS BOX GROUP	3

ASSB_NAME	PART NO.	NAME	QTY
EYE RING GROUP			

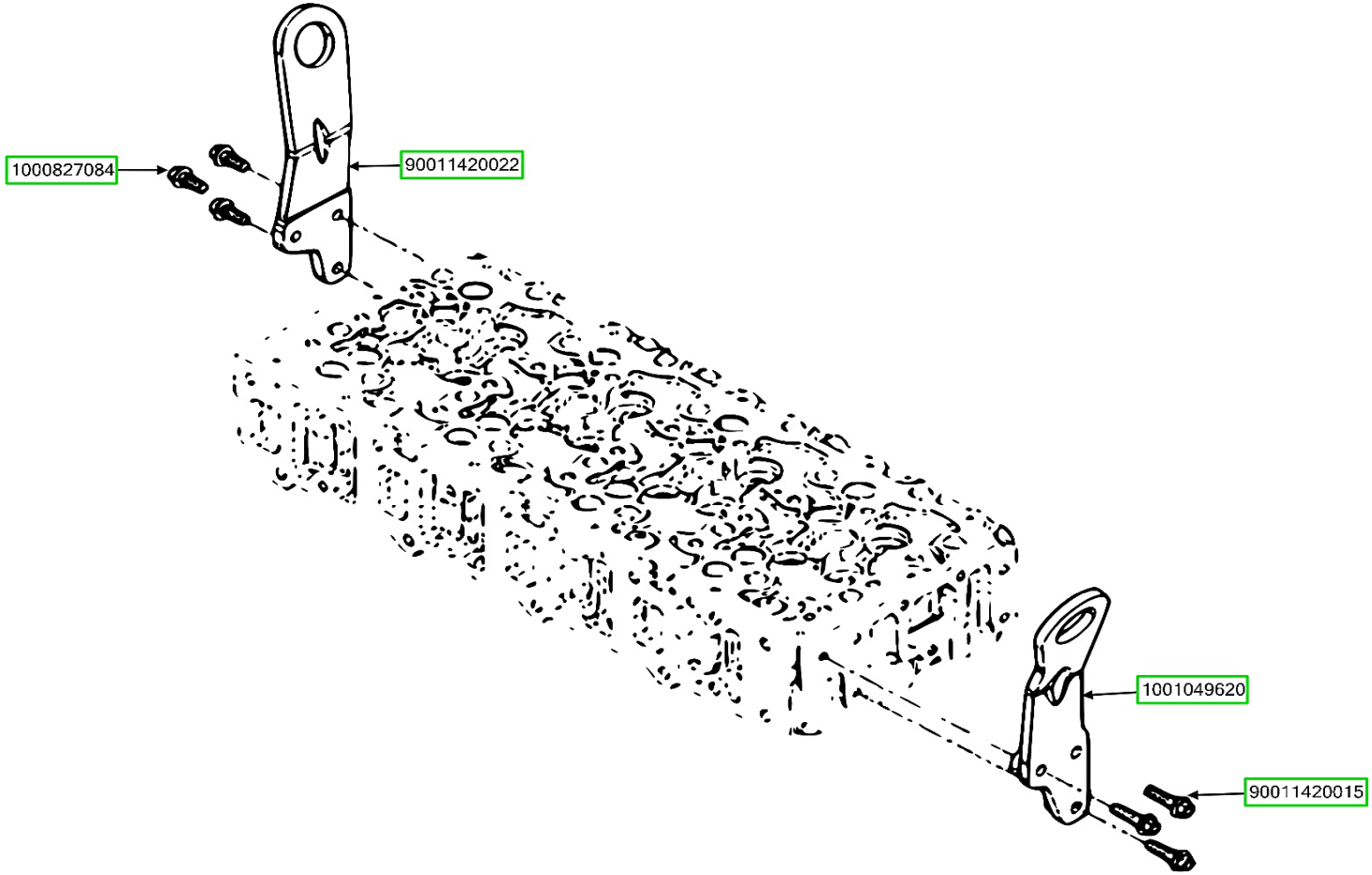

ASSB_NAME	PART NO.	NAME	QTY
TENSIONER AND BELT GROUP	1000827084	ENGINE HANGER PLATE	1
	90011420022	HEXAGON FLANGE BOLT	3
	1001049620	ENGINE HANGER PLATE	1
	90011420015	HEXAGON FLANGE BOLT	3

ASSB_NAME	PART NO.	NAME	QTY
TENSIONER AND BELT GROUP			

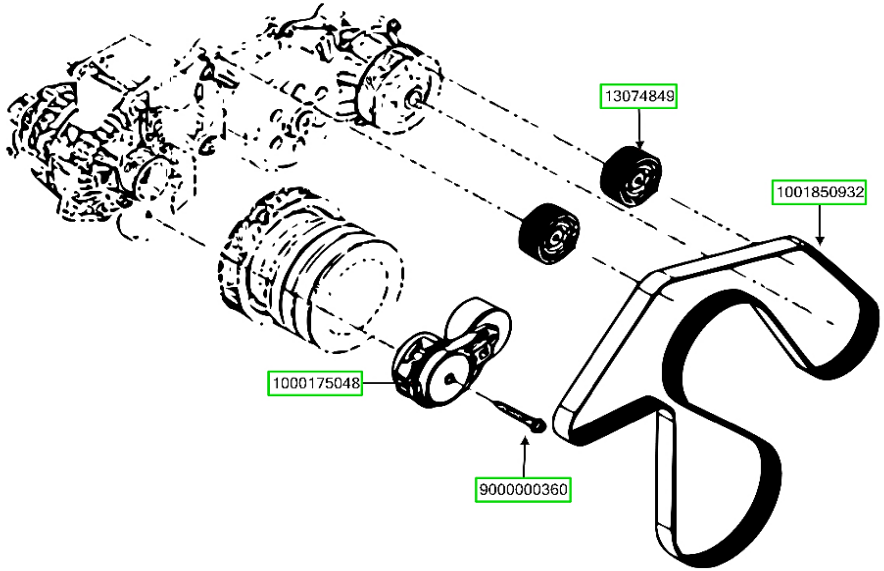

ASSB_NAME	PART NO.	NAME	QTY
ENGINE BRACKET GROUP	13074849	IDLE WHEEL	2
	1001850932	POLY V BELT	1
	9000000360	HEXAGON FLANGE BOLT	1
	1000175048	AUTOMATIC TENSIONER	1

ASSB_NAME	PART NO.	NAME	QTY
ENGINE BRACKET GROUP			

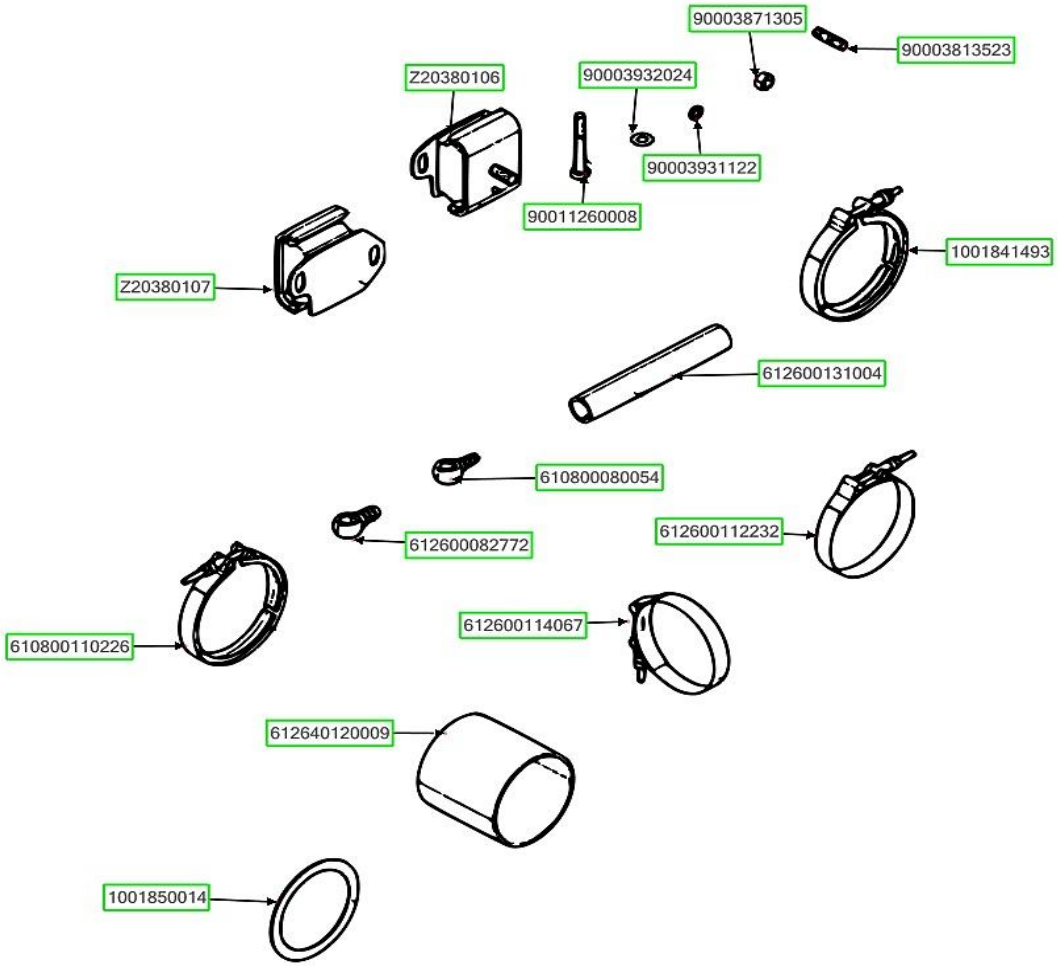

ASSB_NAME	PART NO.	NAME	QTY
PARTS BOX GROUP	Z20380107	FRONT SUSPENSION SOFT CUSHION	1
	Z20380106	FRONT SUSPENSION SOFT CUSHION	1
	90011260008	HEXAGON HEAD BOLT	6
	90003932024	WAVE SPRING WASHER	6
	90003931122	SPRING WASHER	12
	90003871305	HEXAGON NUT	12
	90003813523	DOUBLE END STUD	12

ASSB_NAME	PART NO.	NAME	QTY
PARTS BOX GROUP	610800110226	CLAMP	1
	612600082772	PIPE JOINT	1
	610800080054	PIPE JOINT	1
	612600131004	AIR CONNECTING RUBBER PIPE	1
	1001841493	CLAMP	1
	1001850014	GASKET	1
	612640120009	INTAKE CONNECTING PIPE	1

ASSB_NAME	PART NO.	NAME	QTY
PARTS BOX GROUP	612600114067	CLAMP	2
	612600112232	CLAMP	1

ASSB_NAME	PART NO.	NAME	QTY
Parts Box Group			

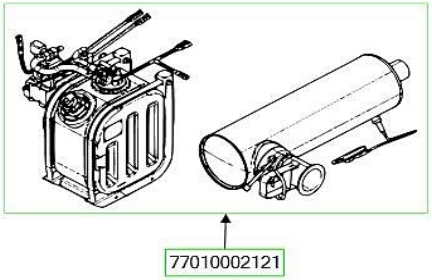

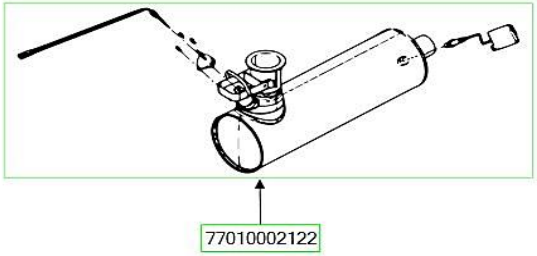

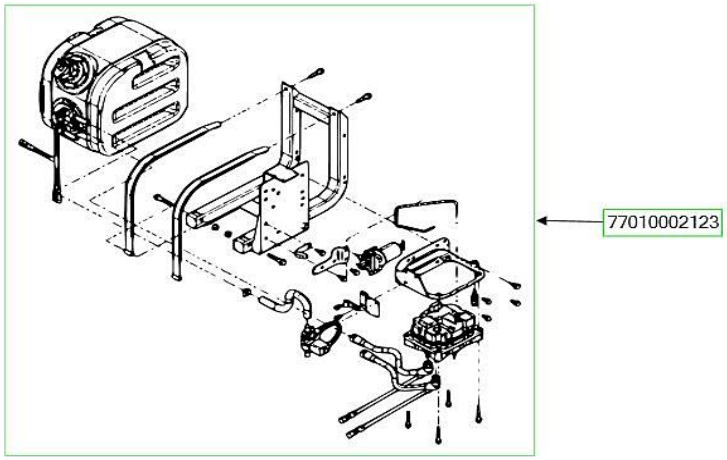

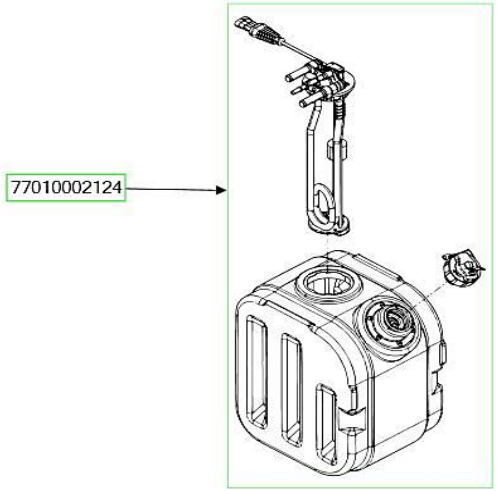

ASSB_NAME	PART NO.	NAME	QTY
EXHAUST SYSTEM	77010002121	DELIVERY PARTS GROUP ATTACHED TO ENGINE	1
	77010002122	SCR BOX ASSEMBLY	1
	77010002123	INTEGRATED UREA TANK ASSEMBLY	1
	77010002124	UREA TANK ASSEMBLY	1

ASSB_NAME	PART NO.	NAME	QTY
EXHAUST SYSTEM			

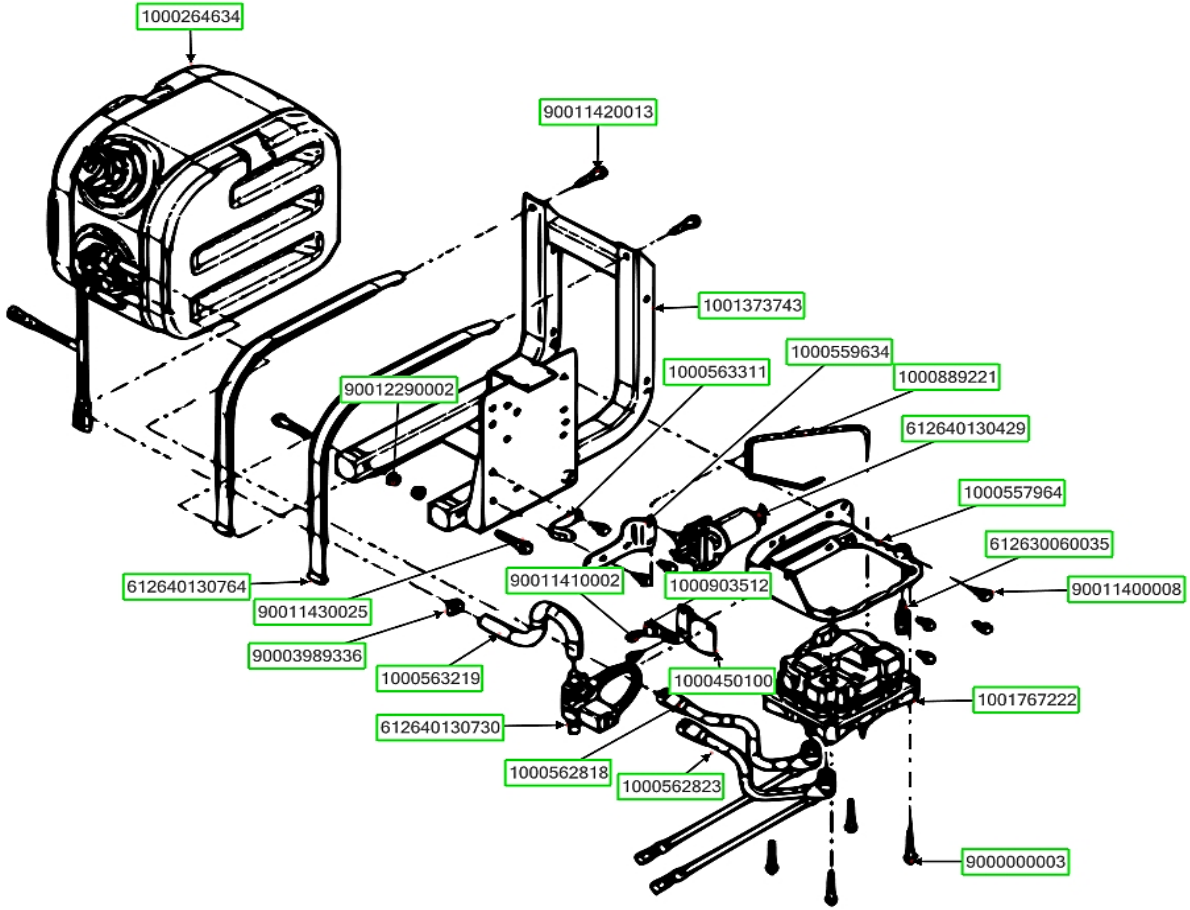

ASSB_NAME	PART NO.	NAME	QTY
INTEGRATED UREA TANK ASSEMBLY	1000264634	UREA TANK ASSEMBLY	1
	90011420013	HEXAGON FLANGE BOLT	2
	1001373743	UREA TANK BRACKET	1
	1000889221	COMPRESSED AIR PIPE	1
	1000557964	UREA PMNP BRAKET	1
	90011400008	HEXAGON FLANGE BOLT	7
	612630060035	TEMPERATURE SENSOR	1

ASSB_NAME	PART NO.	NAME	QTY
INTEGRATED UREA TANK ASSEMBLY	1001767222	UREA PMNP	1
	9000000003	HEXAGON FLANGE BOLT	4
	1000562823	UREA RETURN PIPE	1
	1000562818	UREA INHALE PIPE	1
	612640130730	COOLING WATER SOLENOID VALVE	1
	1000563219	WATER PIPE	1
	90003989336	CLAMP	2

CODE_ASSB	PART NO.	NAME	QTY
INTEGRATED UREA TANK ASSEMBLY	612640130764	CLAMP STRIP	2
	90012290002	HEXAGON FLANGE NUT	2
	90011430025	HEXAGON FLANGE WITH TOOTH BOLT	2
	1000563311	BRACKET	1
	1000559634	BRACKET	1
	612640130429	COMPRESSED AIR FILTER	1
	1000450100	BRACKET	1
	1000903512	PIPE CLAMP	1
	90011410002	HEXAGON FLANGE BOLT	2

CODE_ASSB	PART NO.	NAME	QTY
INTEGRATED UREA TANK ASSEMBLY			

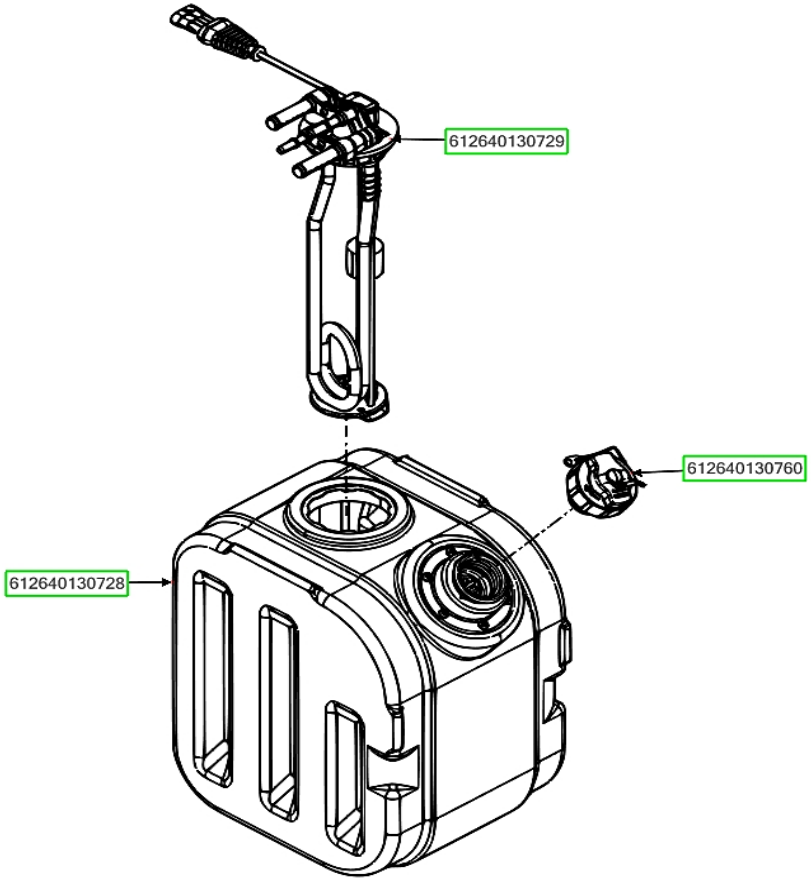

ASSB_NAME	PART NO.	NAME	QTY
UREA TANK ASSEMBLY	612640130729	UREA TANK SENSOR	1
	612640130728	UREA TANK	1
	612640130760	UREA TANK CAP	1

ASSB_NAME	PART NO.	NAME	QTY
UREA TANK ASSEMBLY			

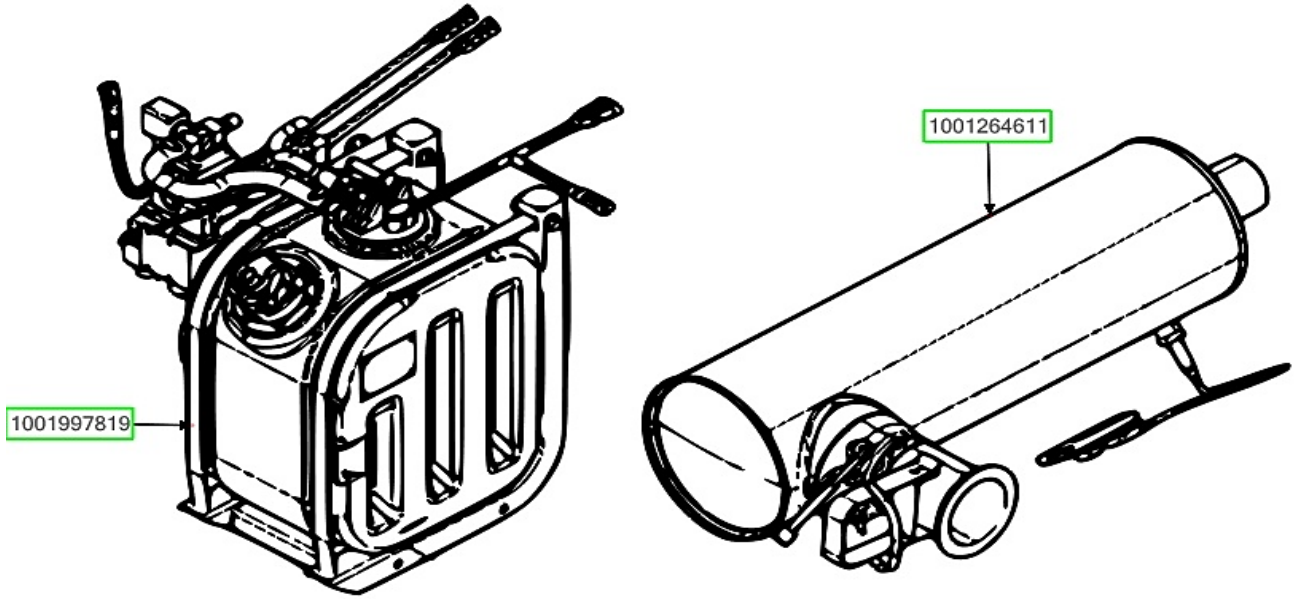

ASSB_NAME	PART NO.	NAME	QTY
DELIVERY PARTS GROUP ATTACHED TO ENGINE	1001997819	INTEGRATED UREA TANK ASSEMBLY	1
	1001264611	SCR BOX ASSEMBLY	1

ASSB_NAME	PART NO.	NAME	QTY
DELIVERY PARTS GROUP ATTACHED TO ENGINE			

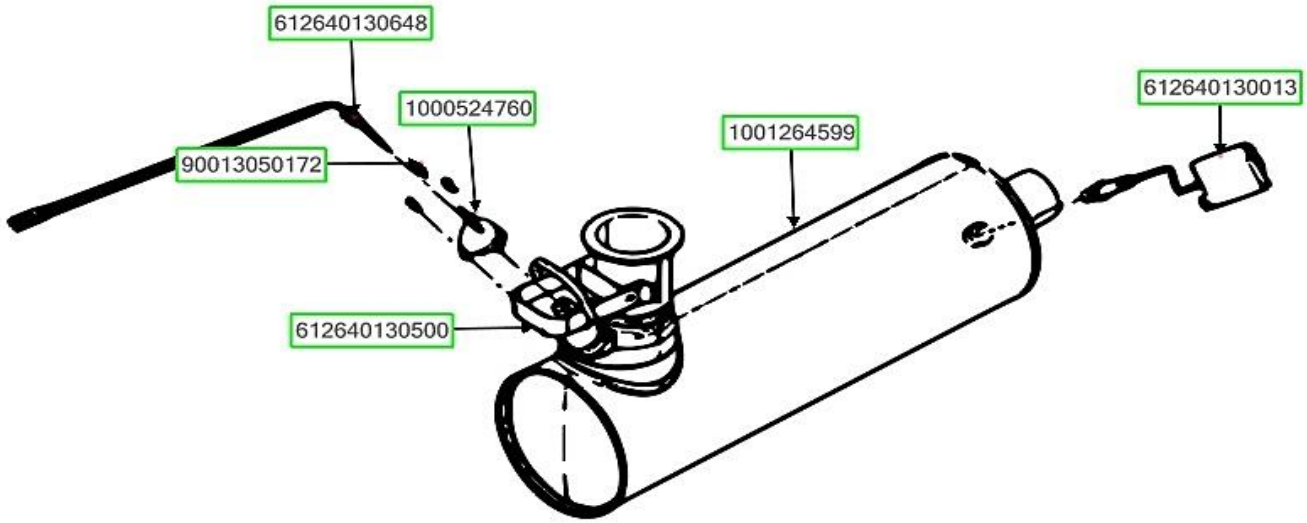

ASSB_NAME	PART NO.	NAME	QTY
SCR BOX ASSEMBLY	612640130648	TEMPERATURE SENSOR	1
	90013050172	INNER HEXAGON SOCKET HEAD CAP SCREW	3
	1000524760	UREA NOZZLE ASSEMBLY	1
	1001264599	SCR CATALYTIC SILENCER	1
	612640130500	UREA NOZZLE BODY FENDER BRACKET	1
	612640130013	NITROGEN-OXYGEN SENSOR	1

ASSB_NAME	PART NO.	NAME	QTY

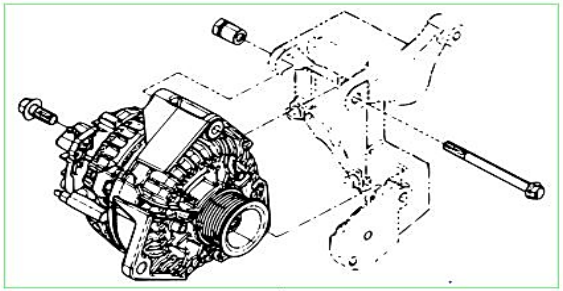

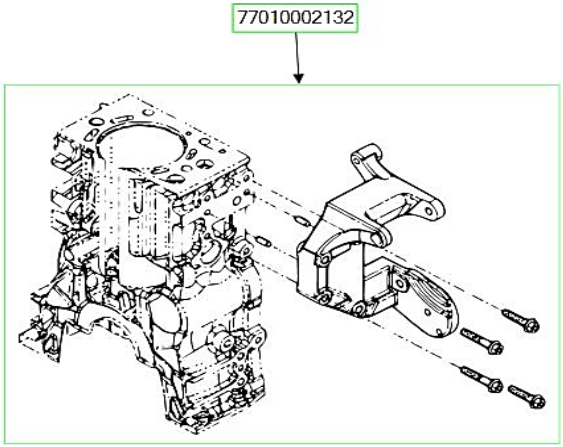

ASSB_NAME	PART NO.	NAME	QTY
ELECTRICAL GENERATOR ASSY	77010002131	ALTERNATOR GROUP	1
	77010002132	ALTERNATOR BRACKET GROUP	1

ASSB_NAME	PART NO.	NAME	QTY
ELECTRICAL GENERATOR ASSY			

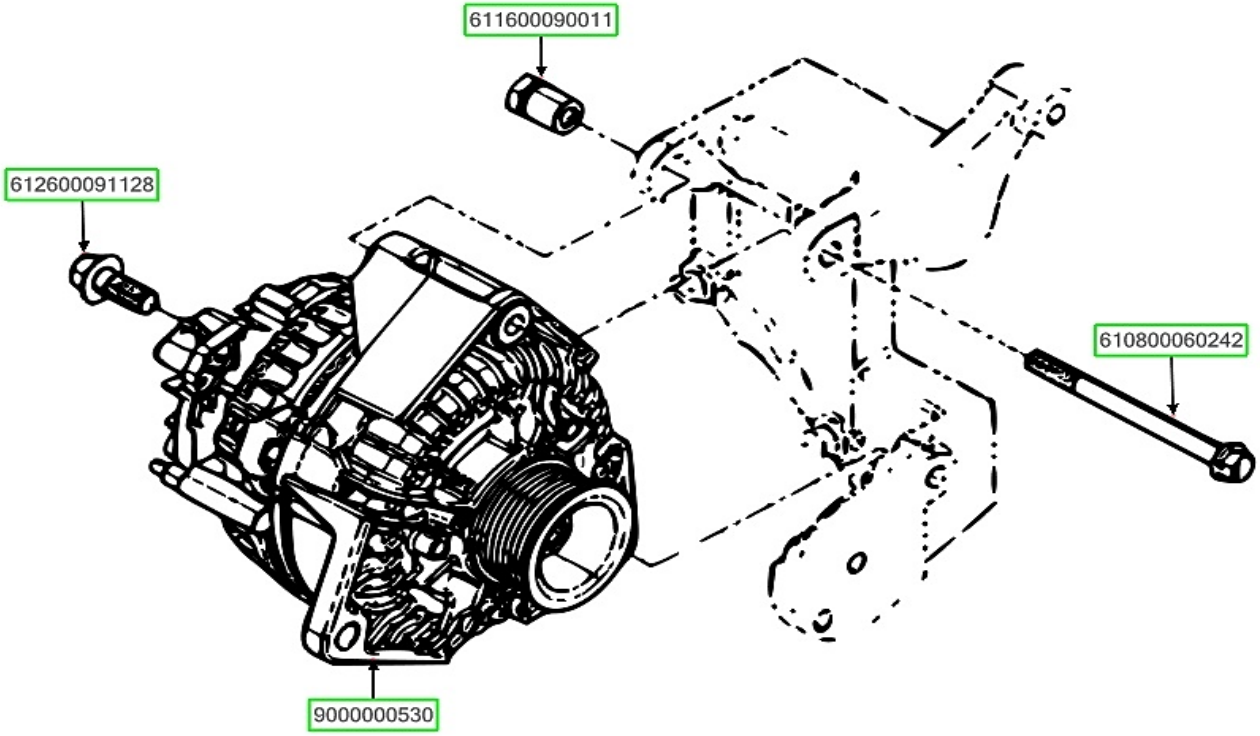

ASSB_NAME	PART NO.	NAME	QTY
ALTERNATOR GROUP	611600090011	NUT	1
	610800060242	HEXAGON HEAD BOLT	1
	612600091128	ALTERNATOR	1
	9000000530	HEXAGON FLANGE BOLT	1

ASSB_NAME	PART NO.	NAME	QTY
Alternator Group			

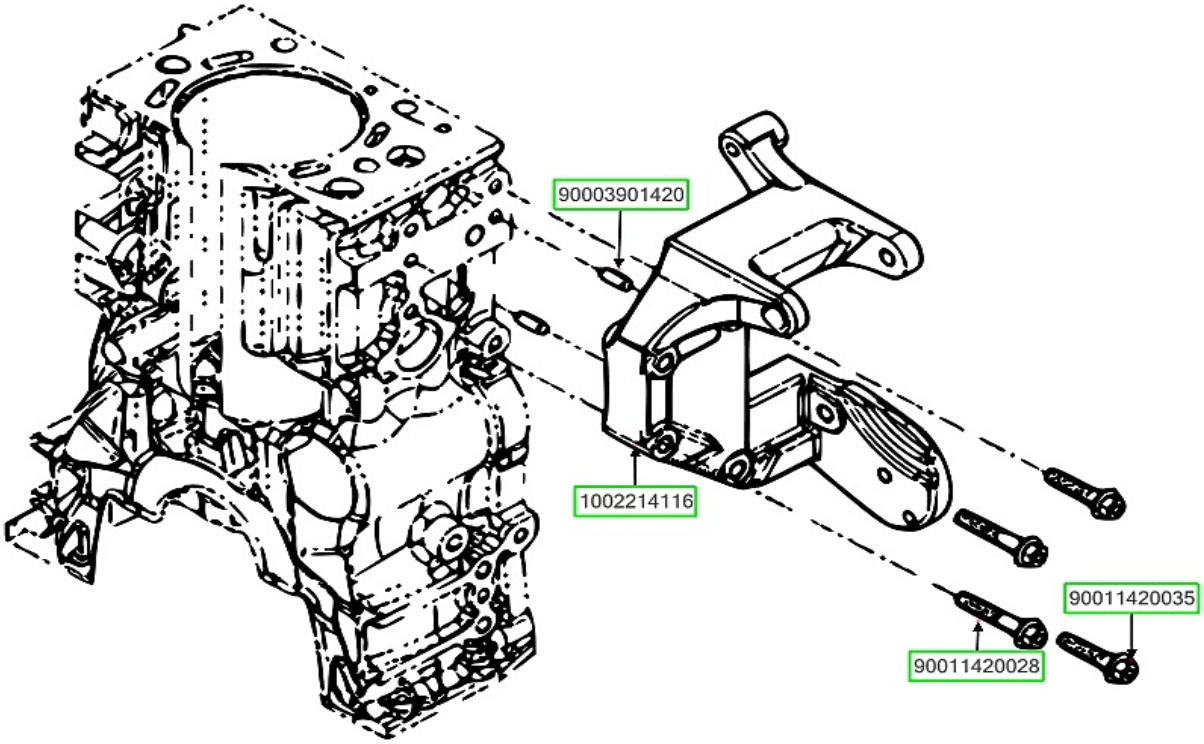

ASSB_NAME	PART NO.	NAME	QTY
ALTERNATOR BRACKET GROUP	90003901420	PARALLEL PIN	2
	1002214116	ALTERNATOR BRACKET	1
	90011420028	HEXAGON FLANGE BOLT	2
	90011420035	HEXAGON FLANGE BOLT	2

ASSB_NAME	PART NO.	NAME	QTY

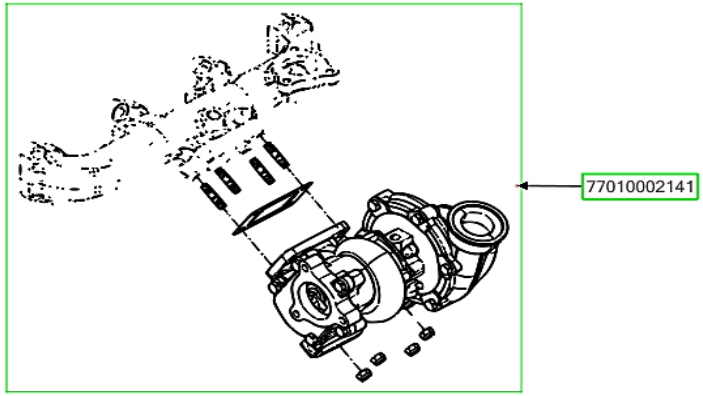

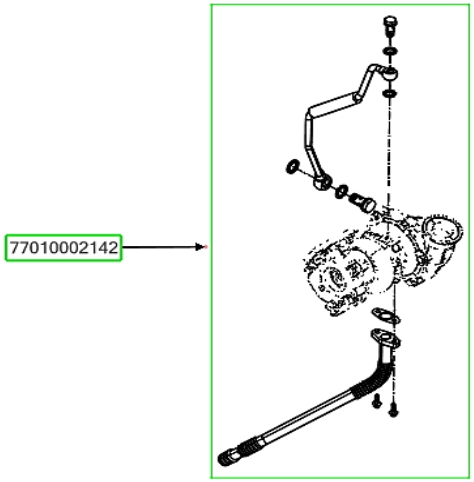

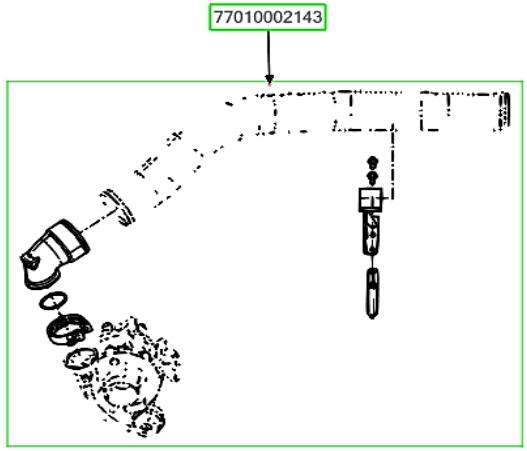

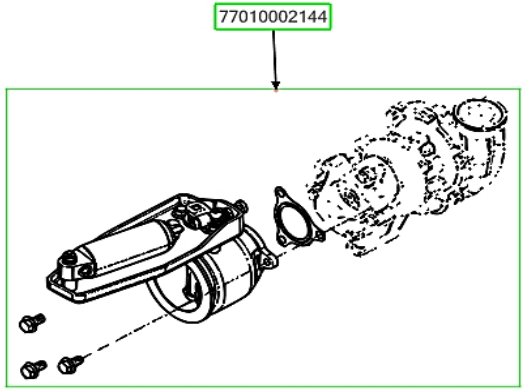

ASSB_NAME	PART NO.	NAME	QTY
TURBO SYSTEM	77010002141	TURBO CHARGER GROUP	1
	77010002142	TURBOCHARGER OIL PIPE GROUP	1
	77010002143	COMPRESSOR PIPE GROUP	1
	77010002144	REAR EXHAUST MANIFOLD GROUP	1

ASSB_NAME	PART NO.	NAME	QTY
TURBO SYSTEM			

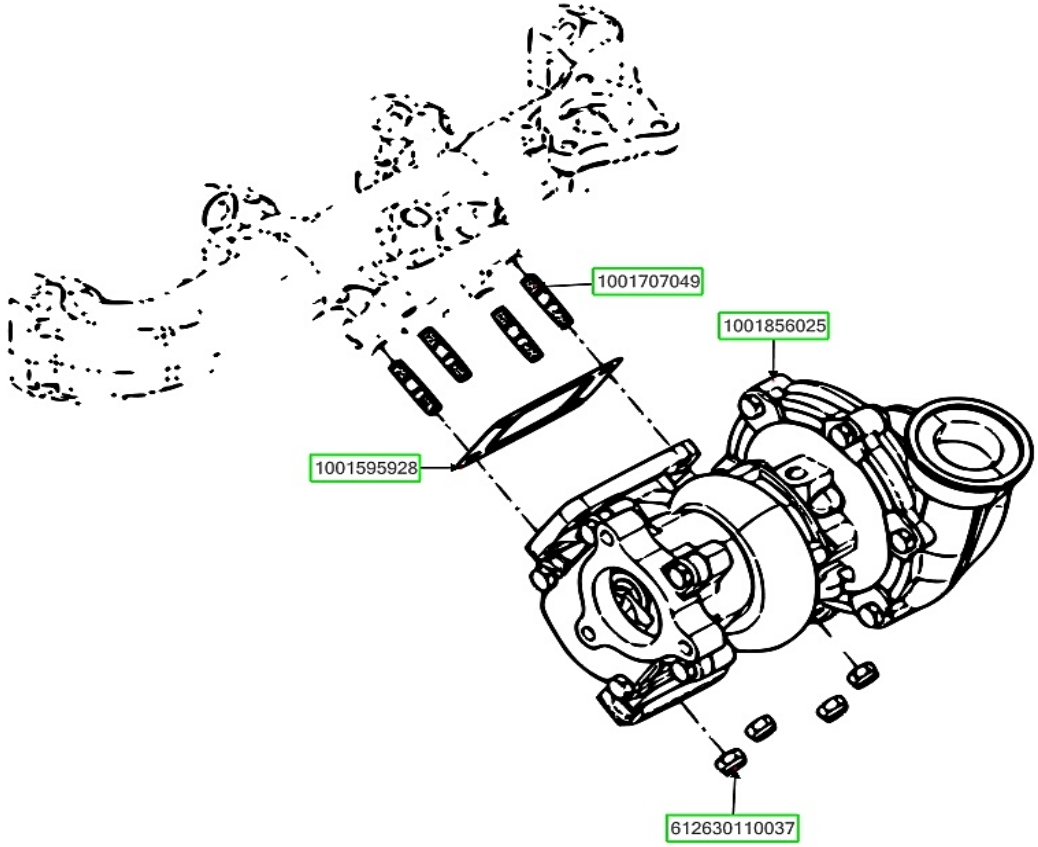

ASSB_NAME	PART NO.	NAME	QTY
TURBO CHARGER GROUP	1001707049	DOUBLE END STUD	4
	1001595928	TURBOCHARGER WASHER	1
	1001856025	TURBOCHARGER	1
	612630110037	HEXAGON NUT	4

ASSB_NAME	PART NO.	NAME	QTY
TURBO CHARGER GROUP			

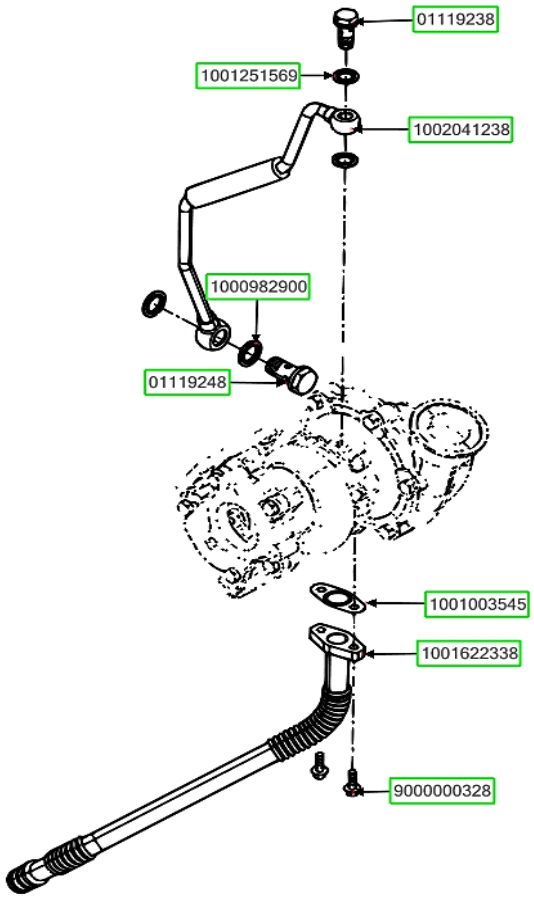

ASSB_NAME	PART NO.	NAME	QTY
TURBOCHARGER OIL PIPE GROUP	01119238	HOLLOW SCREW	1
	1001251569	ASSEMBLED SEALING WASHER	2
	1002041238	TURBOCHARGER OIL PIPE ASSEMBLY	1
	1000982900	ASSEMBLED SEALING WASHER	2
	01119248	HOLLOW SCREW	1
	1001003545	TURBOCHARGER OIL PIPE GASKET	1
	1001622338	TURBOCHARGER OIL PIPE ASSEMBLY	1

ASSB_NAME	PART NO.	NAME	QTY
TURBOCHARGER OIL PIPE GROUP	9000000328	HEXAGON FLANGE BOLT	2

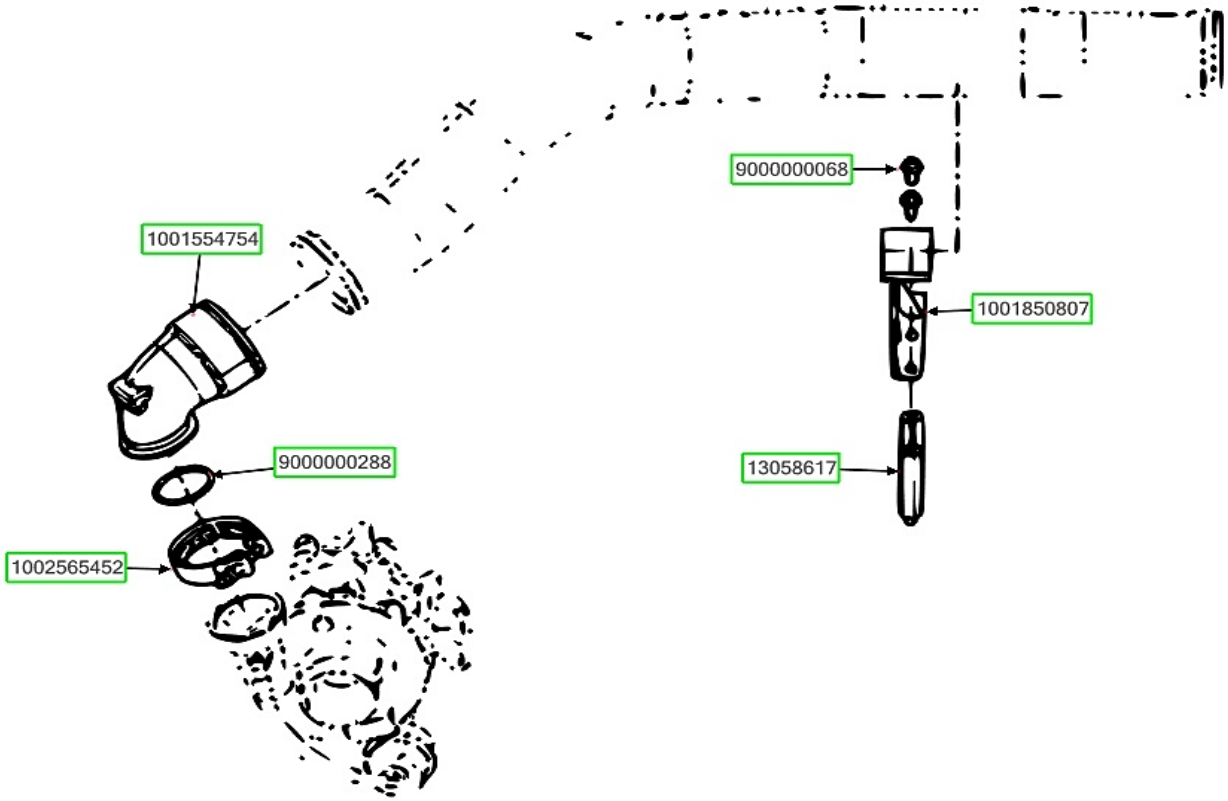

ASSB_NAME	PART NO.	NAME	QTY
COMPRESSOR PIPE GROUP	1002565452	CLAMP	1
	9000000288	O-RING	1
	1001554754	COMPRESSOR AIR PIPE	1
	9000000068	HEXAGON FLANGE BOLT	2
	1001850807	INTER-COOL PIPE BRACKET	1
	13058617	SCREW	2

ASSB_NAME	PART NO.	NAME	QTY
COMPRESSOR PIPE GROUP			

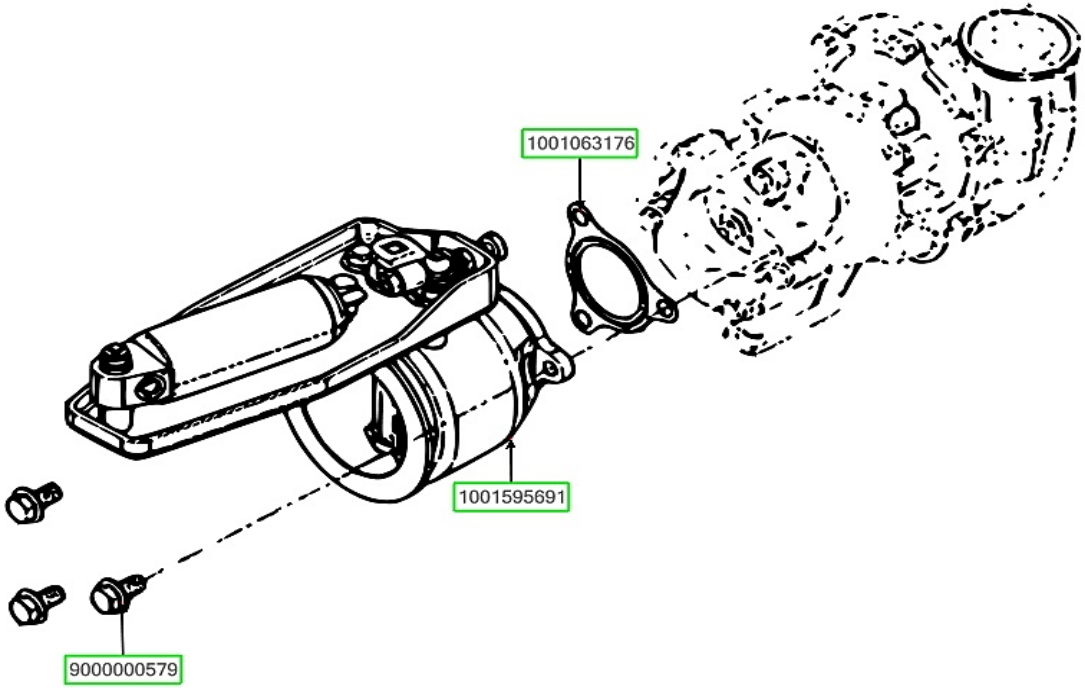

ASSB_NAME	PART NO.	NAME	QTY
REAR EXHAUST MANIFOLD GROUP	1001063176	GASKET	1
	1001595691	REAR EXHAUST MANIFOLD	1
	9000000579	HEXAGON FLANGE BOLT	3

ASSB_NAME	PART NO.	NAME	QTY

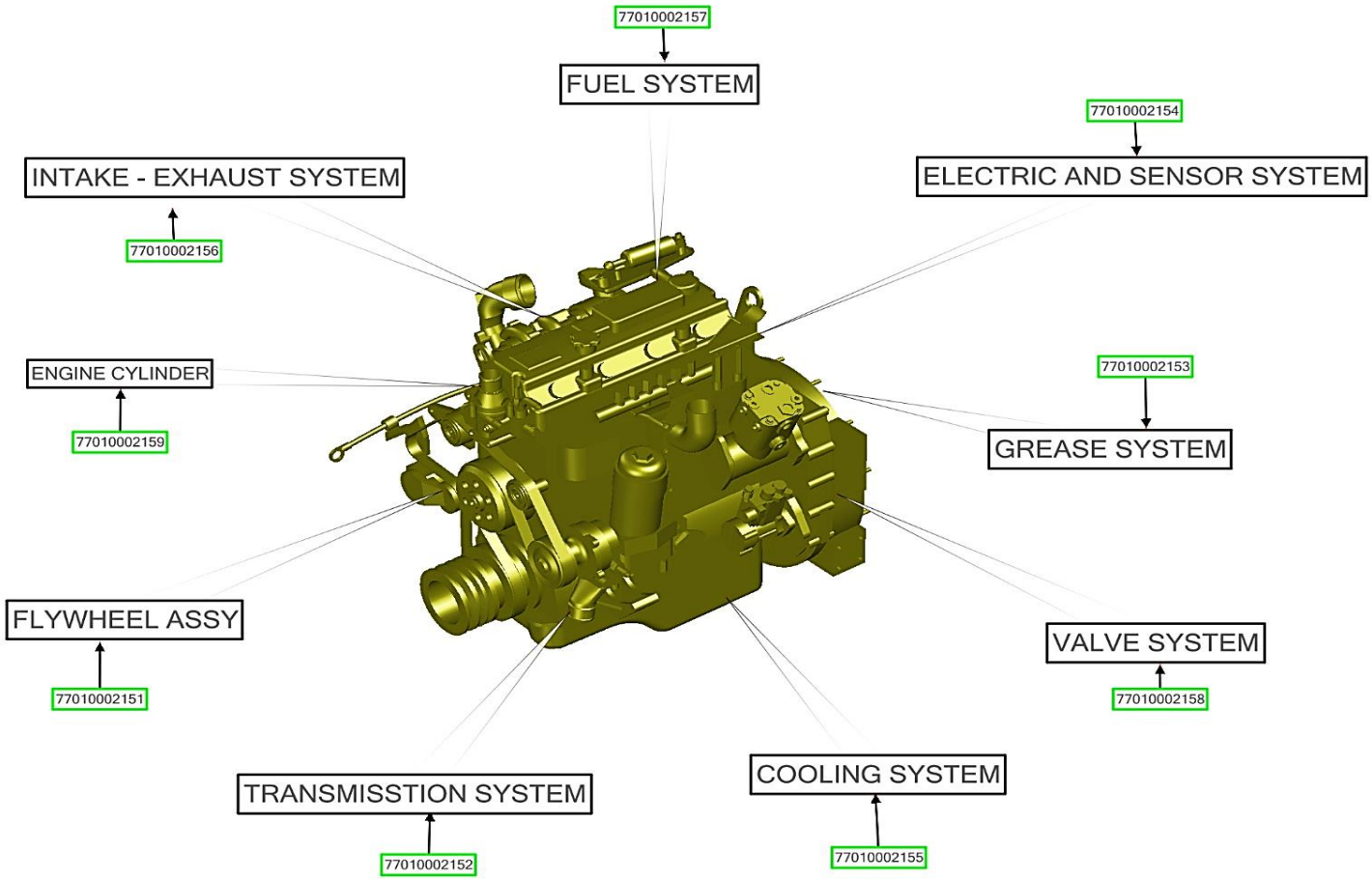

ASSB_NAME	PART NO.	NAME	QTY
ENGINE ASSY	77010002151	FLYWHEEL ASSY	1
	77010002152	TRANSMISSTION SYSTEM	1
	77010002153	GREASE SYSTEM	1
	77010002154	ELECTRIC AND SENSOR SYSTEM	1
	77010002155	COOLING SYSTEM	1
	77010002156	INTAKE - EXHAUST SYSTEM	1
	77010002157	FUEL SYSTEM	1

ASSB_NAME	PART NO.	NAME	QTY
ENGINE ASSY	77010002158	VALVE SYSTEM	1
	77010002159	ENGINE CYLINDER	1

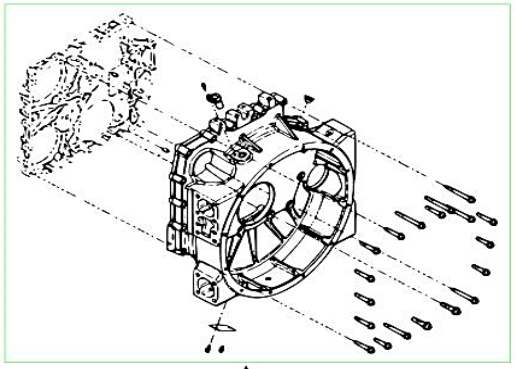

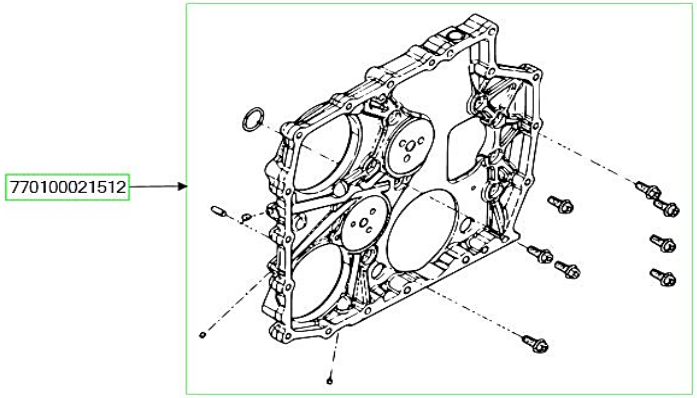

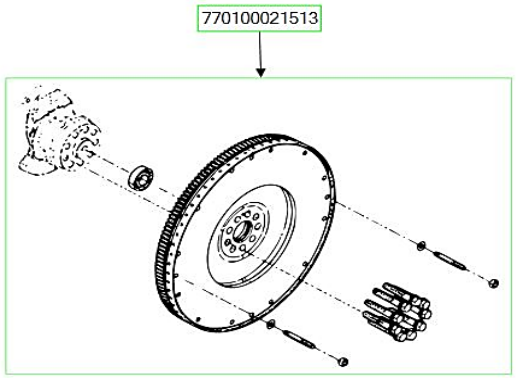

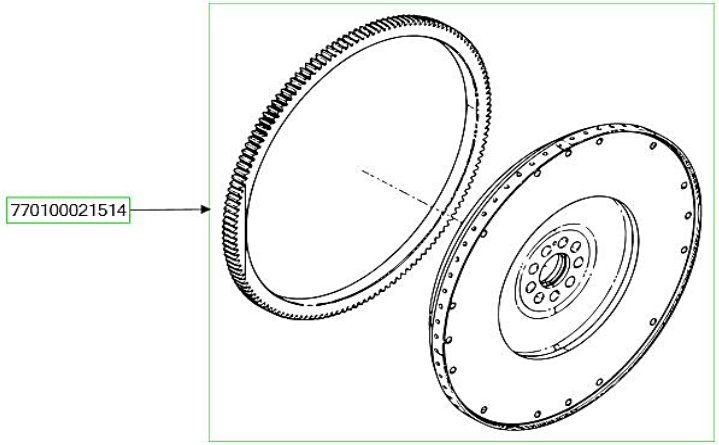

ASSB_NAME	PART NO.	NAME	QTY
FLYWHEEL ASSY	770100021511	FLYWHEEL HOUSING GROUP	1
	770100021512	GEAR HOUSING GROUP	1
	770100021513	FLYWHEEL GROUP	1
	770100021514	FLYWHEEL ASSEMBLY	1

ASSB_NAME	PART NO.	NAME	QTY
FLYWHEEL ASSY			

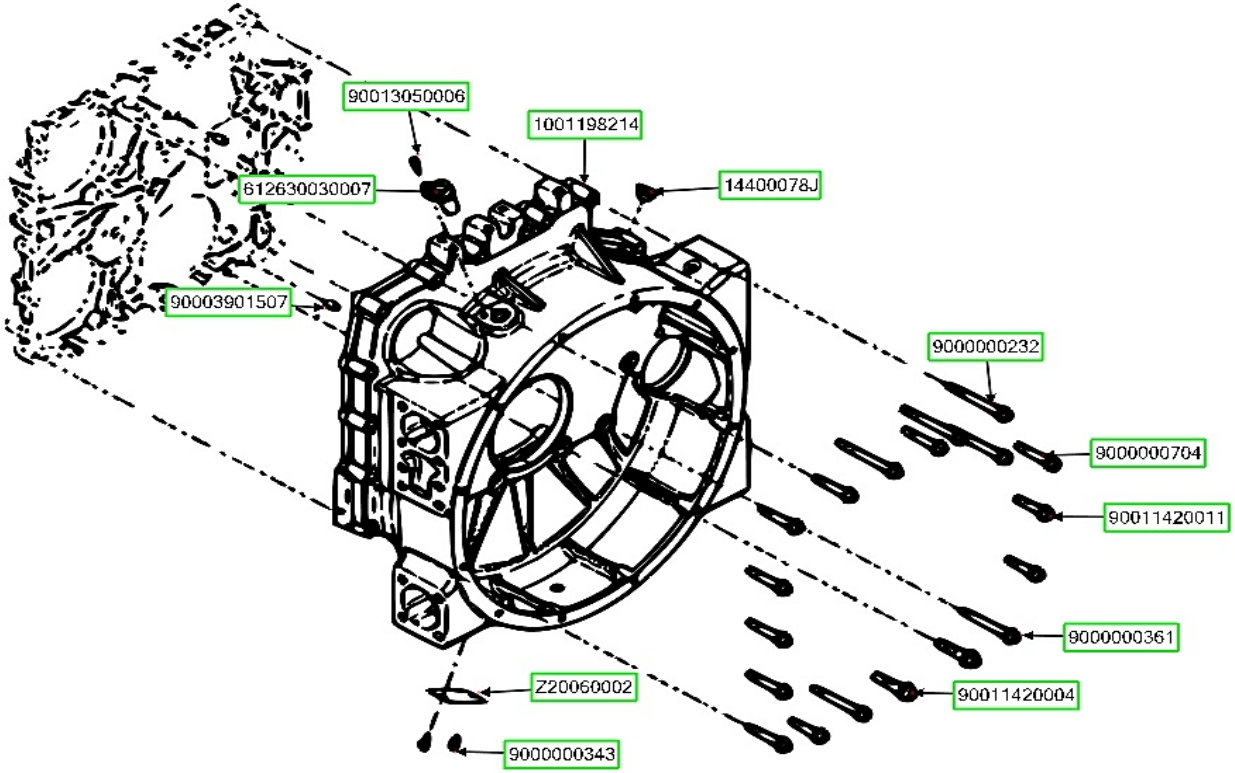

ASSB_NAME	PART NO.	NAME	QTY
FLYWHEEL HOUSING GROUP	90013050006	INNER HEXAGON SOCKET HEAD CAP SCREW	1
	612630030007	SPEED SENSOR	1
	1001198214	FLYWHEEL HOUSING	1
	14400078J	HEXAGON TAPER SCREW PLUG	1
	9000000232	HEXAGON FLANGE BOLT	4
	9000000704	HEXAGON FLANGE BOLT	8
	90011420011	HEXAGON FLANGE BOLT	3

ASSB_NAME	PART NO.	NAME	QTY
FLYWHEEL HOUSING GROUP	9000000361	HEXAGON FLANGE BOLT	2
	90011420004	HEXAGON FLANGE BOLT	2
	Z20060002	HANDHOLE COVER	1
	9000000343	HEXAGON FLANGE BOLT	2
	90003901507	PARALLEL PIN	2

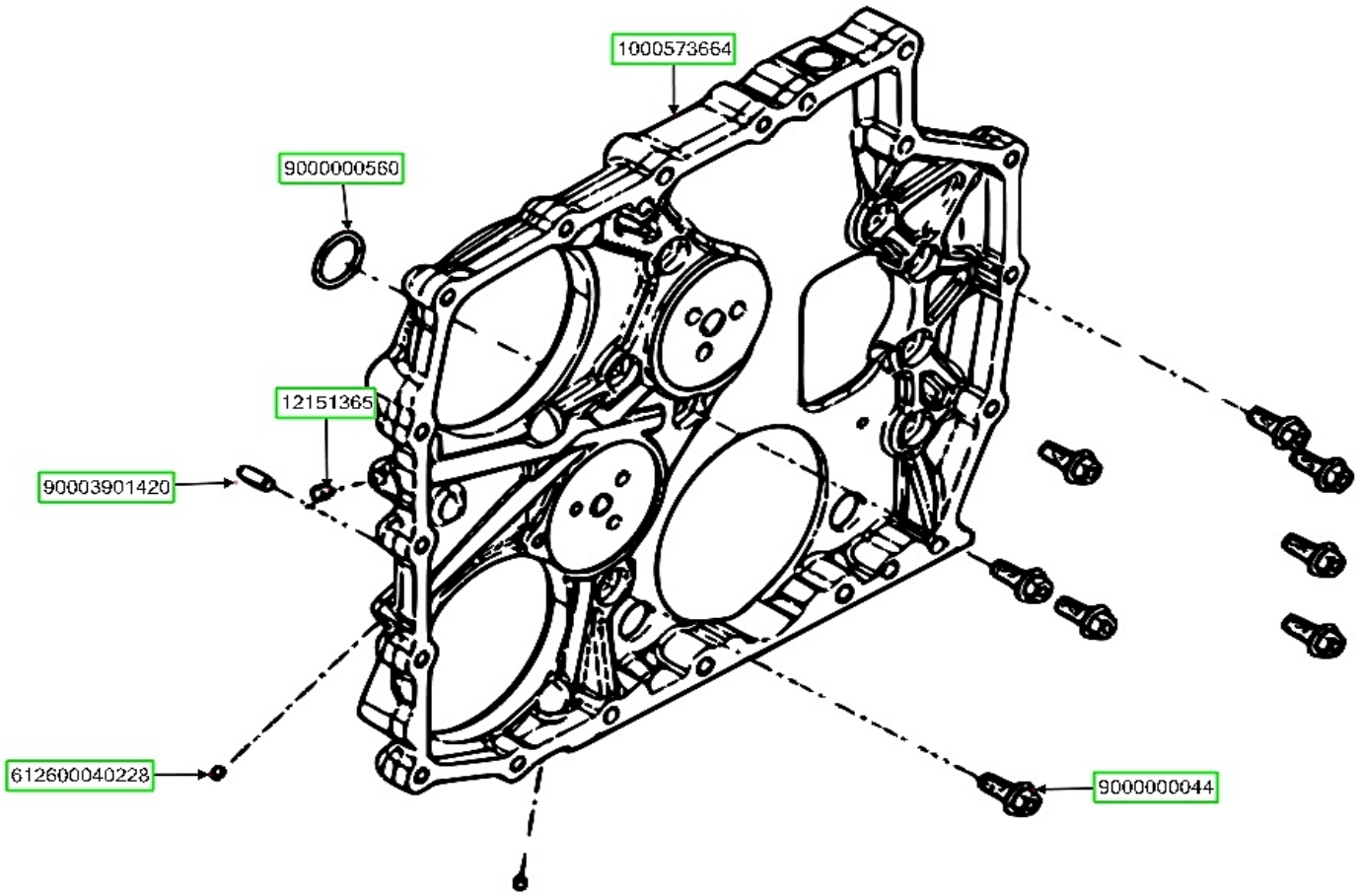

ASSB_NAME	PART NO.	NAME	QTY
GEAR HOUSING GROUP	9000000560	O-RING	1
	90003901420	PARALLEL PIN	1
	12151365	PULLING RIVET	1
	612600040228	PULLING RIVET	2
	1000573664	TIMING GEAR CHAMBER	1
	9000000044	HEXAGON FLANGE BOLT	8

ASSB_NAME	PART NO.	NAME	QTY
GEAR HOUSING GROUP			

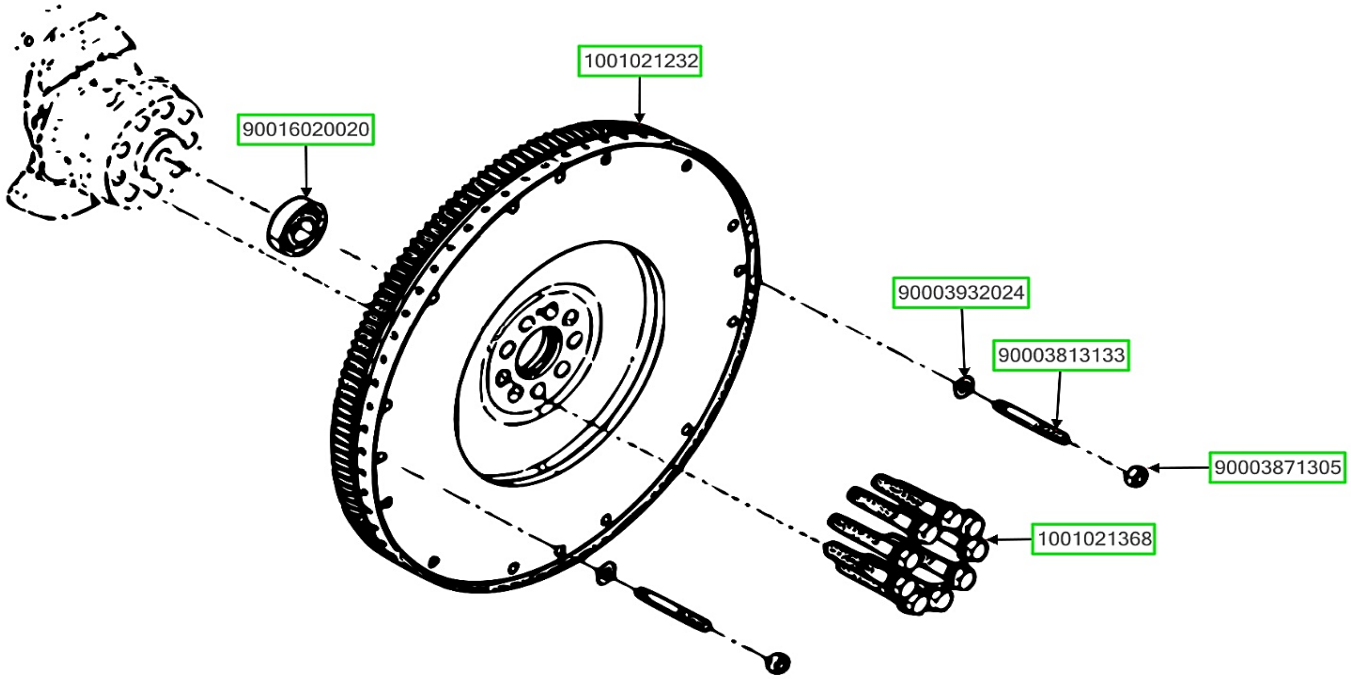

ASSB_NAME	PART NO.	NAME	QTY
FLYWHEEL GROUP	90016020020	DEEP GROOVE BALL BEARING	1
	1001021232	FLYWHEEL ASSEMBLY	1
	90003932024	WAVE SPRING WASHER	2
	90003813133	DOUBLE END STUD	2
	90003871305	HEXAGON NUT	2
	1001021368	FLYWHEEL BOLT	9

ASSB_NAME	PART NO.	NAME	QTY
FLYWHEEL GROUP			

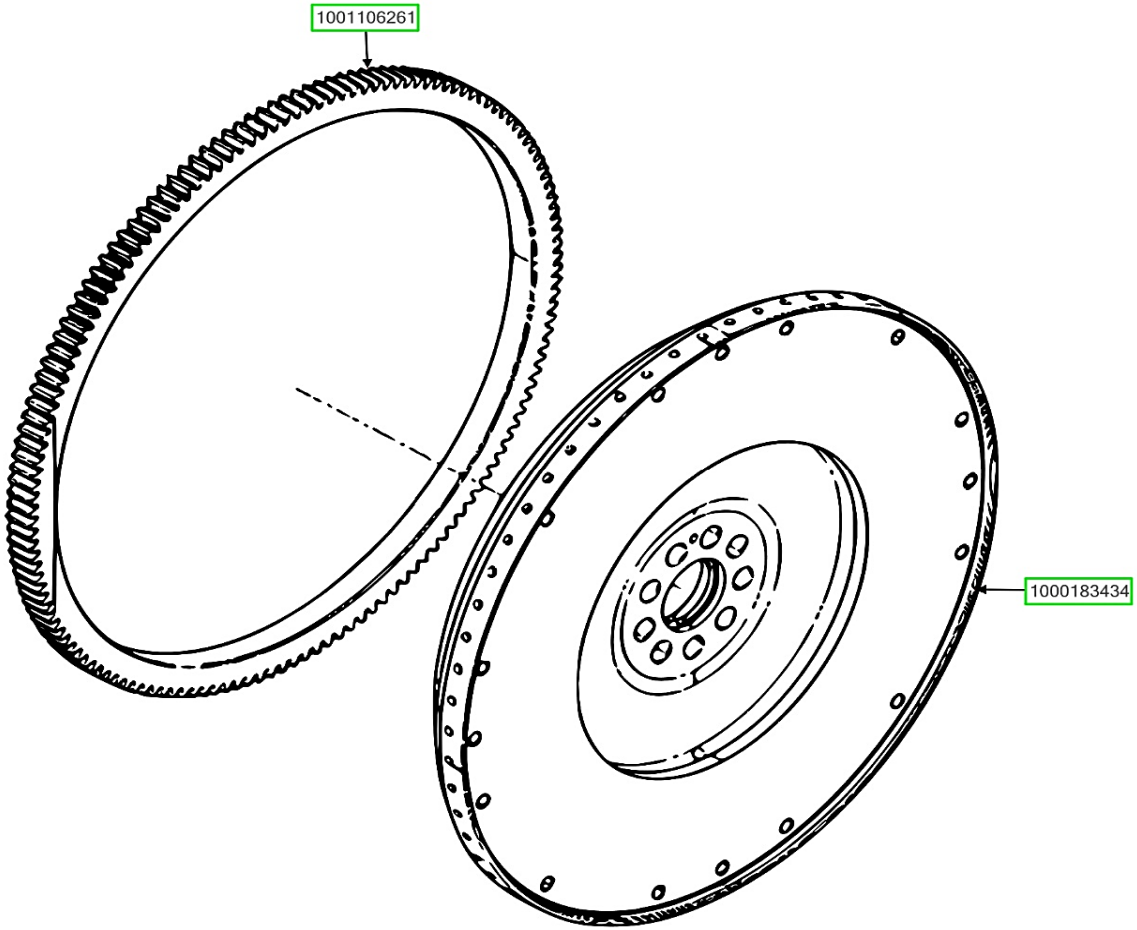

ASSB_NAME	PART NO.	NAME	QTY
FLYWHEEL ASSEMBLY	1001106261	FLYWHEEL RING GEAR	1
	1000183434	FLYWHEEL	1

ASSB_NAME	PART NO.	NAME	QTY
FLYWHEEL ASSEMBLY			

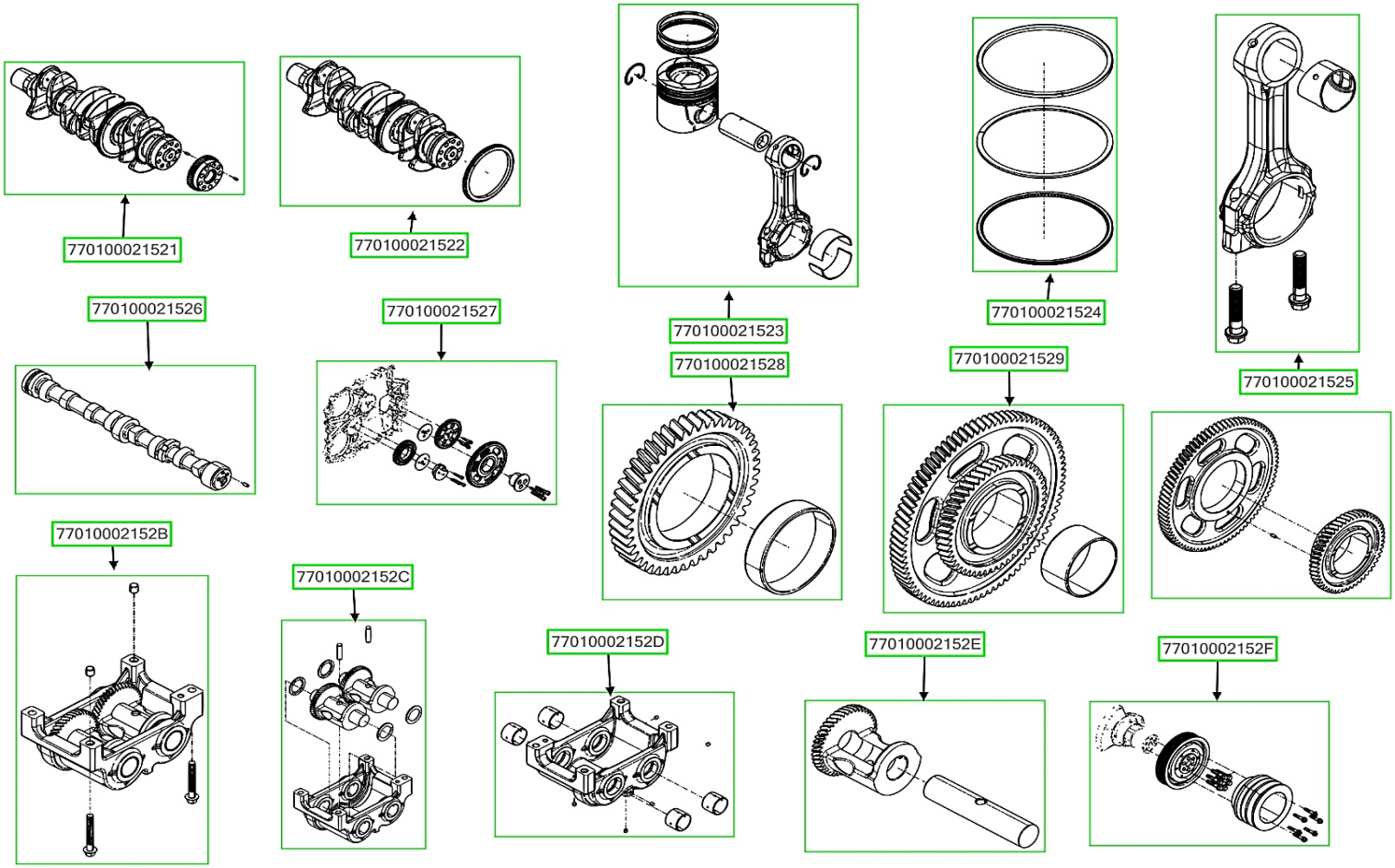

ASSB_NAME	PART NO.	NAME	QTY
TRANSMISSTION SYSTEM	770100021521	CRANKSHAFT GROUP	1
	770100021522	CRANKSHAFT SUBASSEMBLY	1
	770100021523	PISTON AND CONNECTING ROD GROUP	1
	770100021524	PISTON RING SET	1
	770100021525	CONNECTING ROD ASSEMBLY	1
	770100021526	CAMSHAFT ASSEMBLY	1
	770100021527	GEAR DRIVE GROUP	1
	77010002152F	CRANKSHAFT PULLEY GROUP	1

ASSB_NAME	PART NO.	NAME	QTY
TRANSMISSTION SYSTEM	770100021528	IDLER GEAR ASSEMBLY	1
	770100021529	IDLER GEAR ASSEMBLY 01	1
	77010002152A	IDLER GEAR SET	1
	77010002152B	SECOND ORDER BALANCE MECHANISMGR	1
	77010002152C	SECONDARY BALANCE MACHANISM	1
	77010002152D	BALANCE SHAFT UNIT HOUSING SET	1
	77010002152E	SECONDARY BALANCE MACHANISM DRIVEN GEAR SET	1

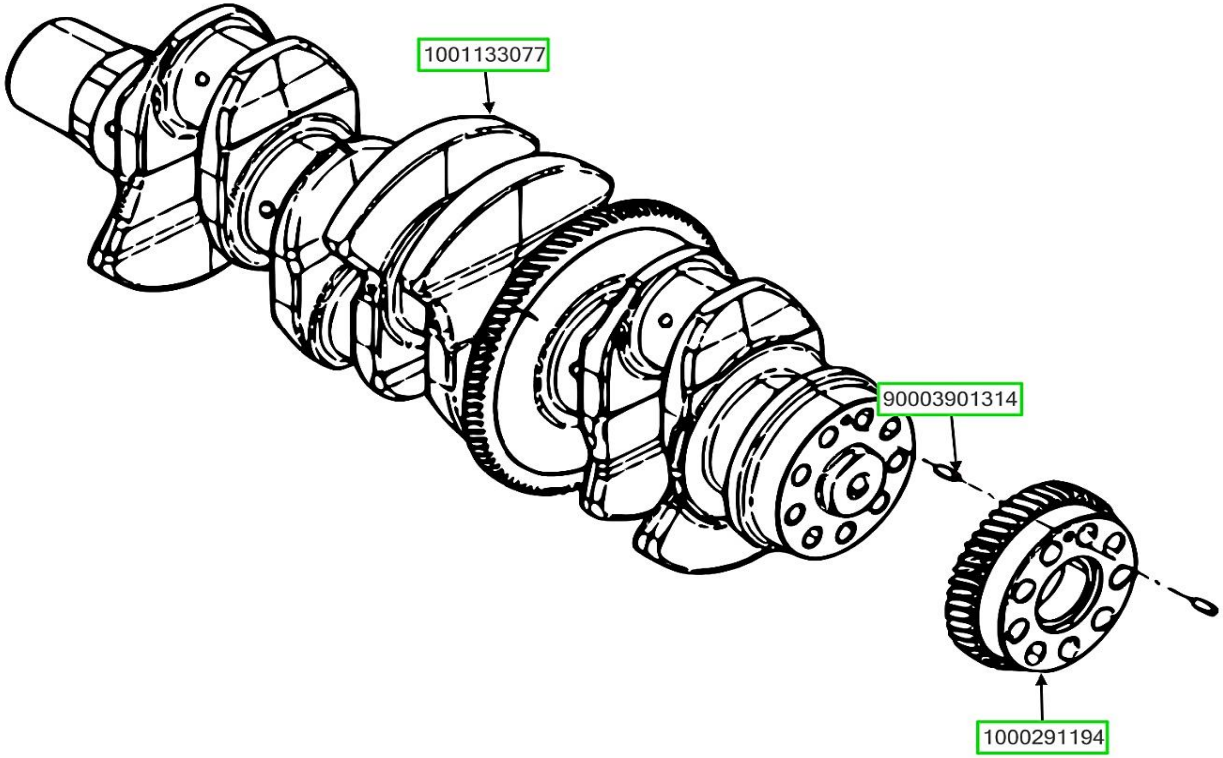

ASSB_NAME	PART NO.	NAME	QTY
CRANKSHAFT GROUP	1001133077	CRANKSHAFT SUBASSEMBLY	1
	90003901314	PARALLEL PIN	2
	1000291194	CRANKSHAFT TIMING GEAR	1

ASSB_NAME	PART NO.	NAME	QTY
CRANKSHAFT GROUP			

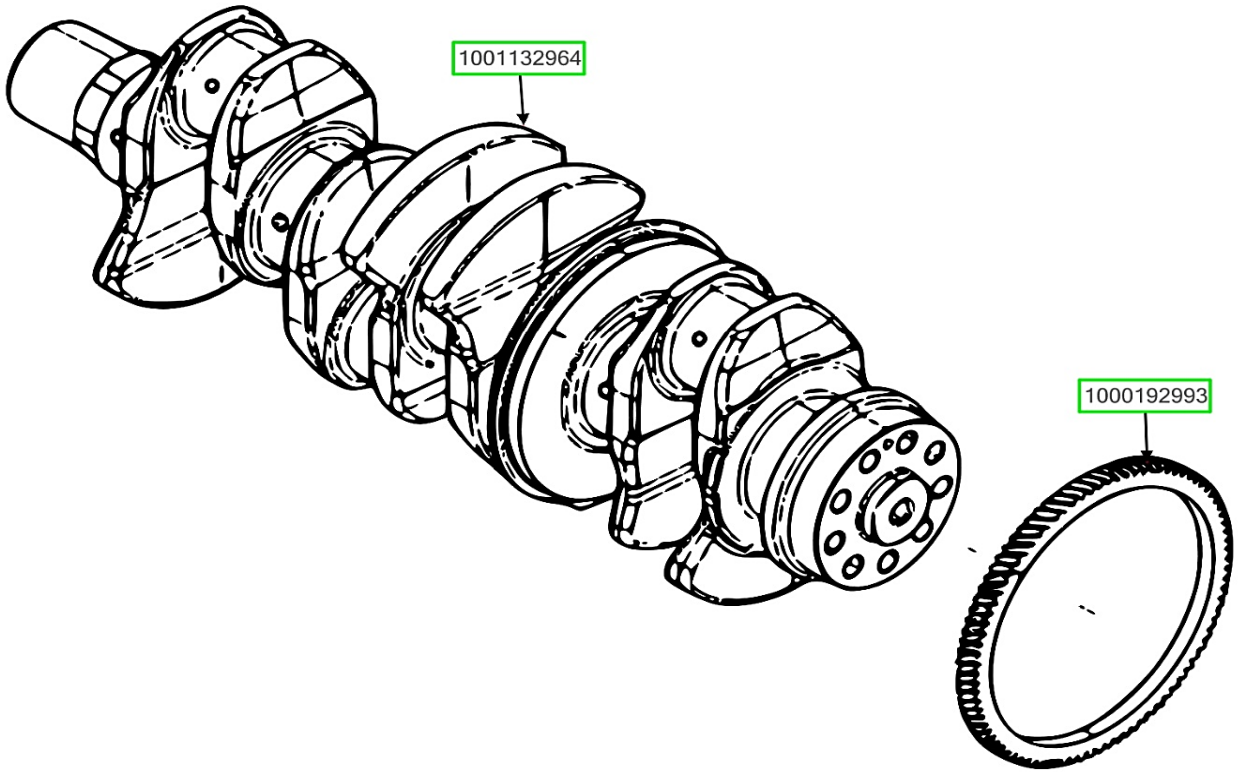

ASSB_NAME	PART NO.	NAME	QTY
CRANKSHAFT SUBASSEMBLY	1001132964	CRANKSHAFT	1
	1000192993	SECONDARY BALANCE MACHANISM GEAR RING	1

ASSB_NAME	PART NO.	NAME	QTY
CRANKSHAFT SUBASSEMBLY			

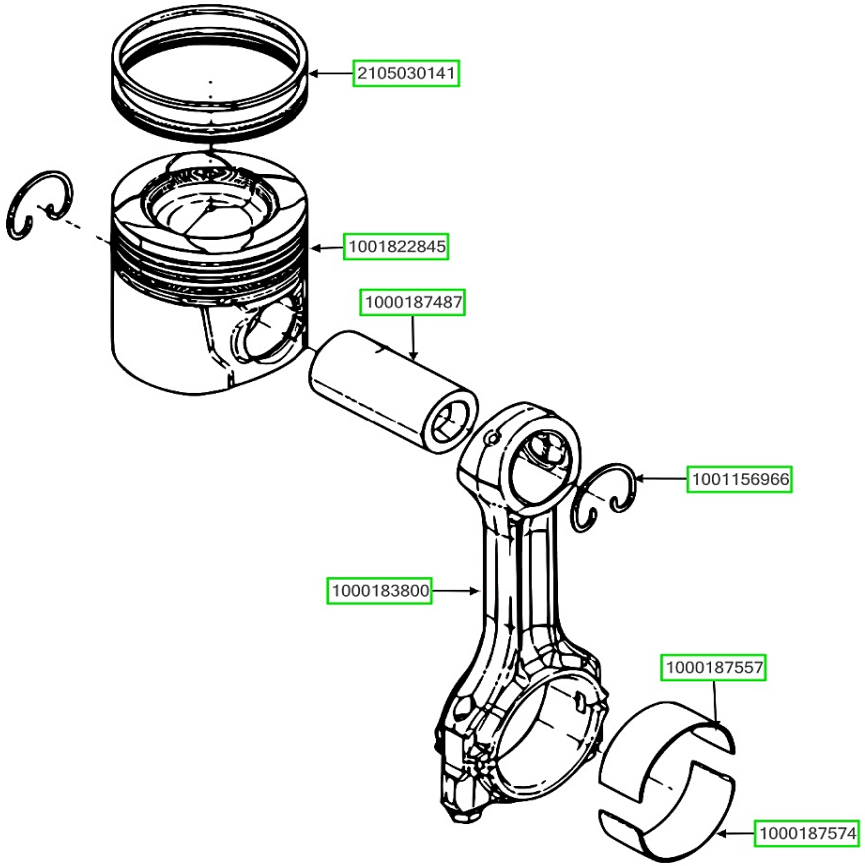

ASSB_NAME	PART NO.	NAME	QTY
PISTON AND CONNECTING ROD GROUP	2105030141	PISTON RING SET	1
	1001822845	PISTON	1
	1000187487	PISTON PIN	1
	1000183800	CONNECTING ROD ASSEMBLY	1
	1001156966	PISTON PIN RETAINER	2
	1000187557	CONNECTING ROD UPPER SHELL	1
	1000187574	CONNECTING ROD LOWER SHELL	1

ASSB_NAME	PART NO.	NAME	QTY
PISTON AND CONNECTING ROD GROUP			

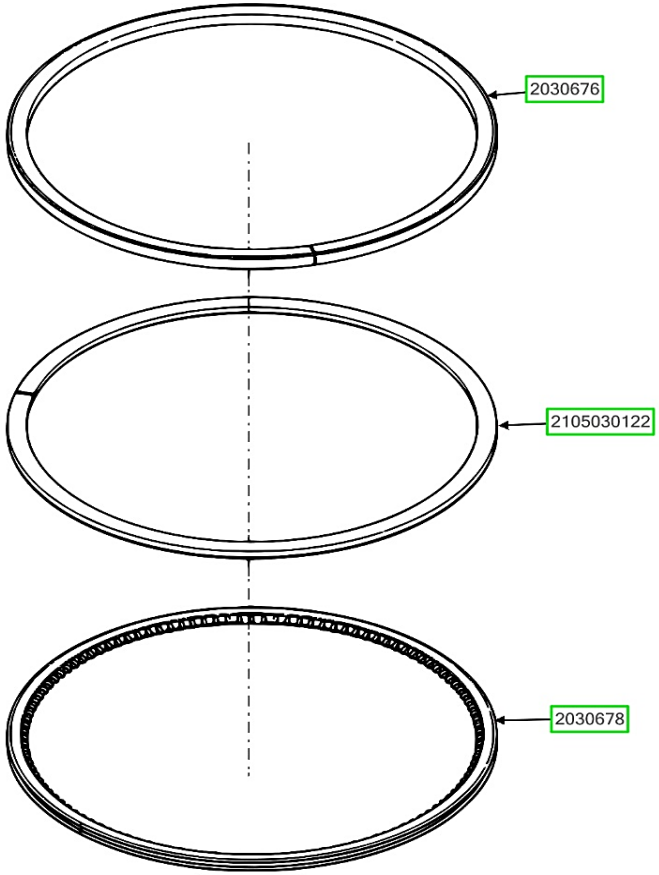

ASSB_NAME	PART NO.	NAME	QTY
PISTON RING SET	2030676	KEYSTONE BARREL RING	1
	2105030122	TWIST TAPER RING	1
	2030678	COIL SPRING LOADED OIL-CONTROL RING	1

ASSB_NAME	PART NO.	NAME	QTY
PISTON RING SET			

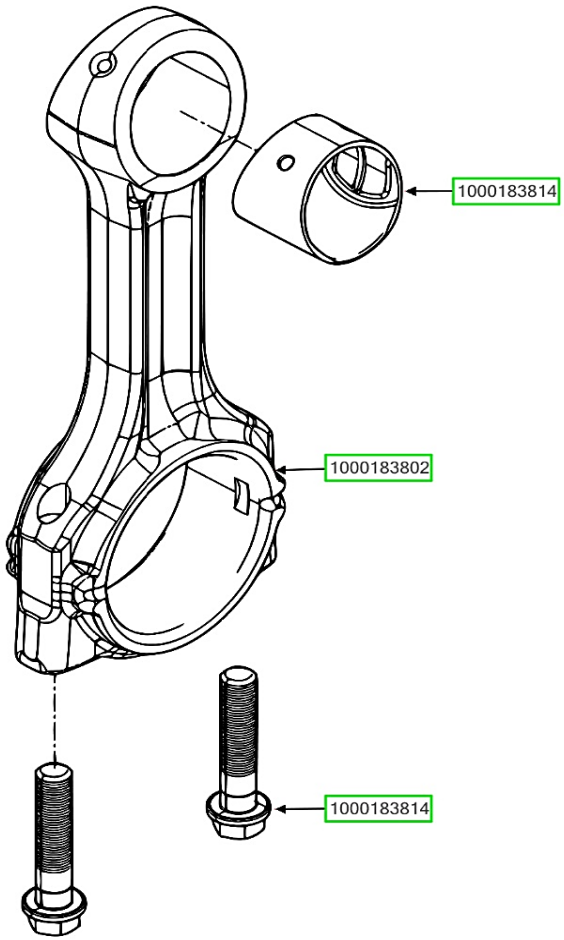

ASSB_NAME	PART NO.	NAME	QTY
CONNECTING ROD ASSEMBLY	1000187559	CONNECTING ROD BUSH	1
	1000183802	CONNECTING ROD	1
	1000183814	CONNECTING ROD BOLT	2

ASSB_NAME	PART NO.	NAME	QTY
CONNECTING ROD ASSEMBLY			

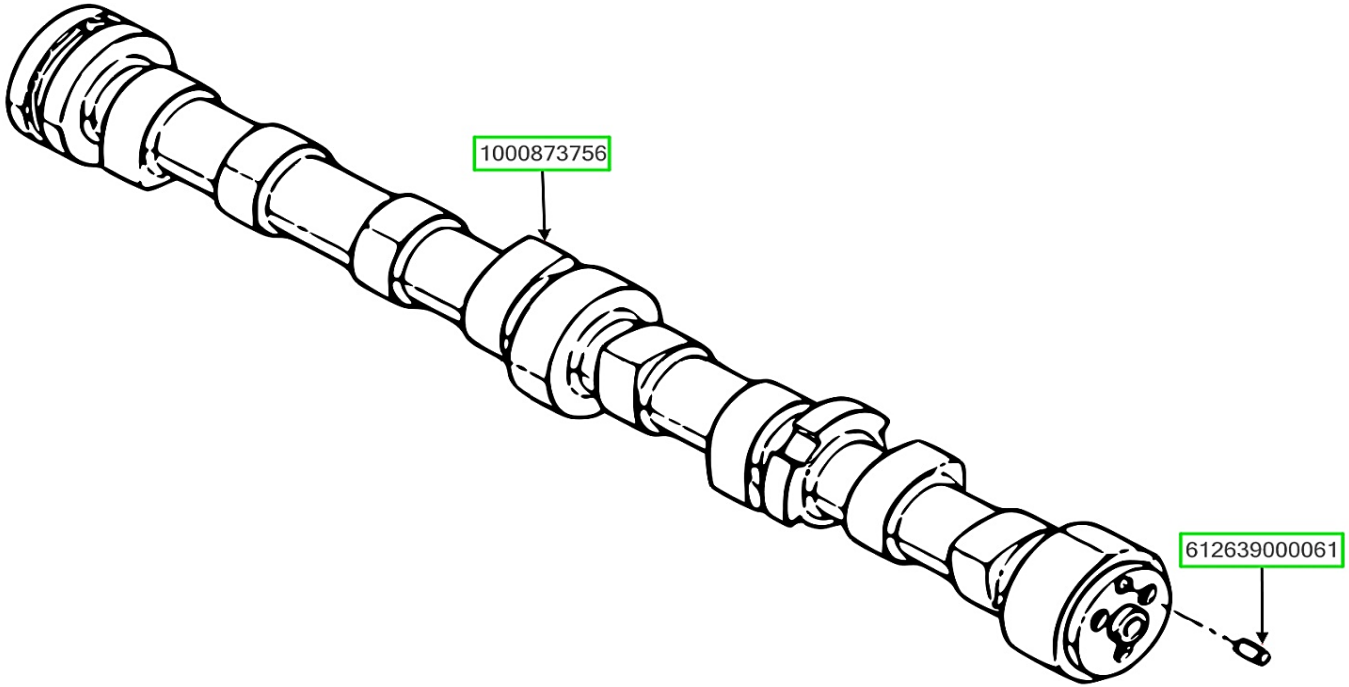

ASSB_NAME	PART NO.	NAME	QTY
CAMSHAFT ASSEMBLY	1000873756	CAMSHAFT	1
	612639000061	PARALLEL PIN	1

ASSB_NAME	PART NO.	NAME	QTY
CAMSHAFT ASSEMBLY			

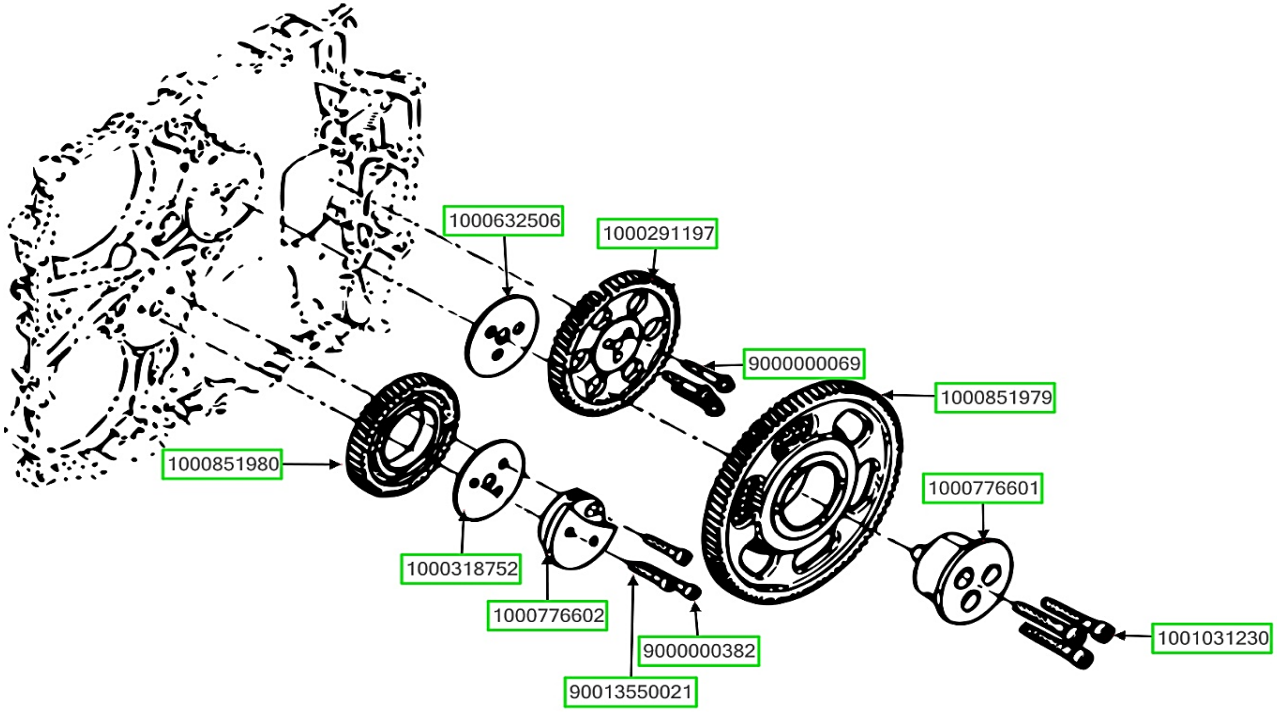

ASSB_NAME	PART NO.	NAME	QTY
GEAR DRIVE GROUP	1000632506	MIDDLE GEAR COVER	1
	1000291197	CAMSHAFT TIMING GEAR	1
	9000000069	HEXAGON FLANGE BOLT	3
	1000851979	IDLER GEAR ASSEMBLY	1
	1000776601	IDLER GEAR SHAFT	1
	1001031230	INNER HEXAGON SOCKET HEAD CAP SCREW	3
	9000000382	INNER HEXAGON SOCKET HEAD CAP SCREW	1

ASSB_NAME	PART NO.	NAME	QTY
GEAR DRIVE GROUP	90013550021	INNER HEXAGON SOCKET HEAD CAP SCREW	2
	1000776602	IDLER GEAR SHAFT	1
	1000318752	MIDDLE GEAR COVER	1
	1000851980	IDLER GEAR ASSEMBLY	1

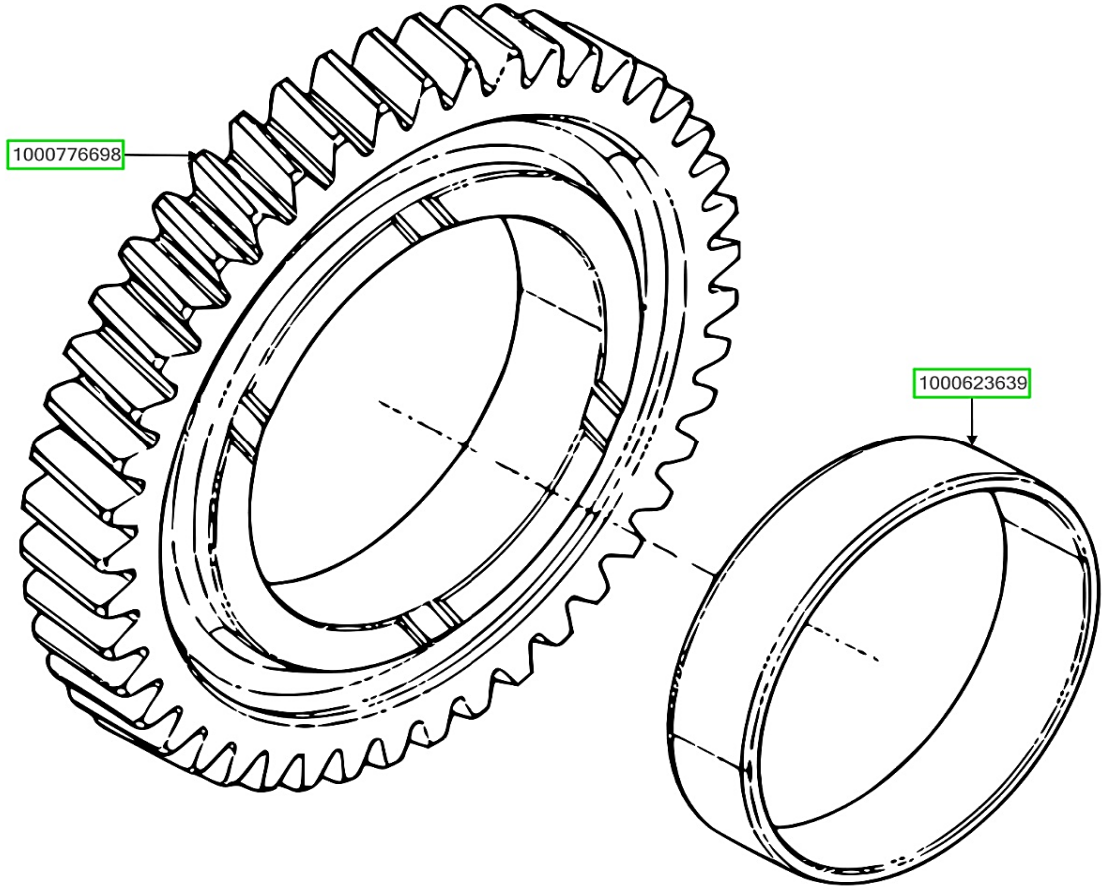

ASSB_NAME	PART NO.	NAME	QTY
IDLER GEAR ASSEMBLY	1000776698	IDLER GEAR	1
	1000623639	GEAR BUSH	1

ASSB_NAME	PART NO.	NAME	QTY
IDLER GEAR ASSEMBLY			

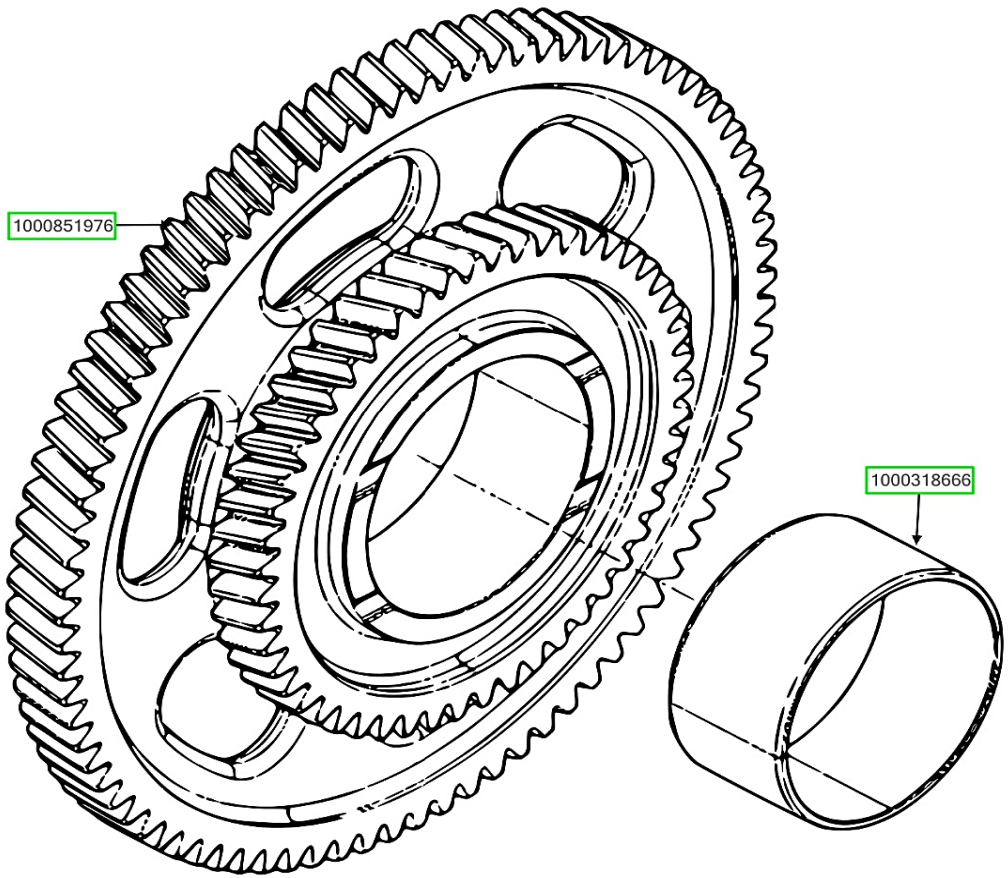

ASSB_NAME	PART NO.	NAME	QTY
IDLER GEAR ASSEMBLY 01	1000851976	IDLER GEAR SET	1
	1000318666	GEAR BUSH	1

ASSB_NAME	PART NO.	NAME	QTY
IDLER GEAR ASSEMBLY 01			

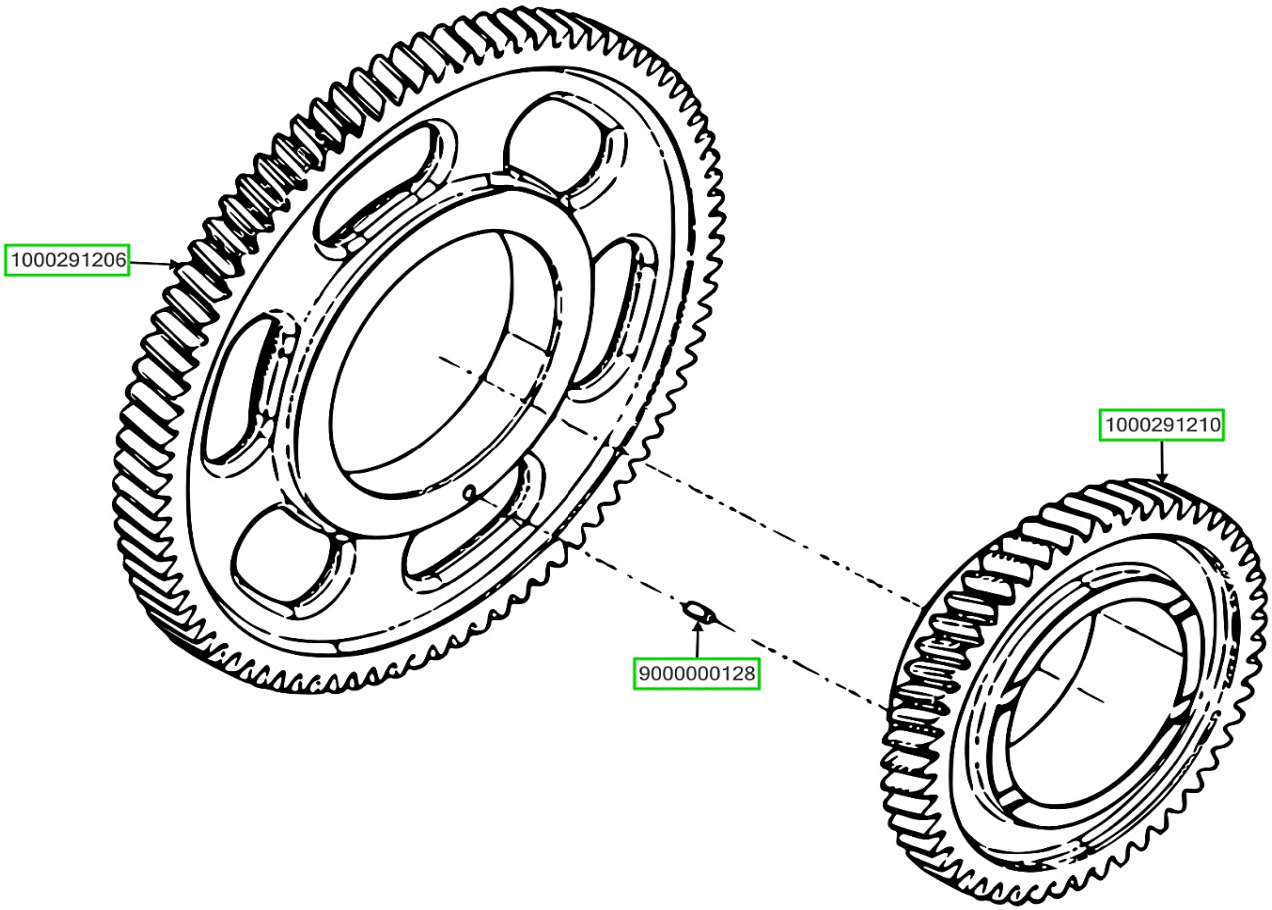

ASSB_NAME	PART NO.	NAME	QTY
IDLER GEAR SET	1000291206	BIG IDLER GEAR	1
	9000000128	PARALLEL PIN	1
	1000291210	SMALL IDLER GEAR	1

ASSB_NAME	PART NO.	NAME	QTY
IDLER GEAR SET			

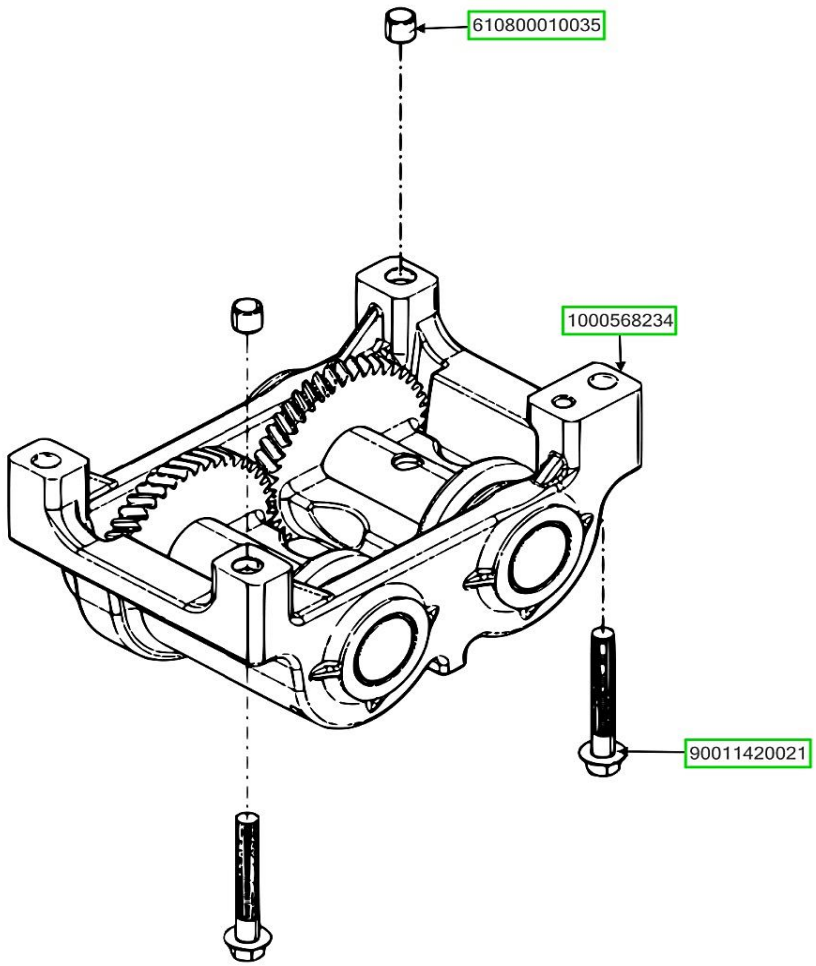

ASSB_NAME	PART NO.	NAME	QTY
SECOND ORDER BALANCE MECHANISM GROUP	610800010035	DOWEL PIN	2
	1000568234	SECONDARY BALANCE MACHANISM	1
	90011420021	HEXAGON FLANGE BOLT	2

ASSB_NAME	PART NO.	NAME	QTY
SECOND ORDER BALANCE MECHANISM GROUP			

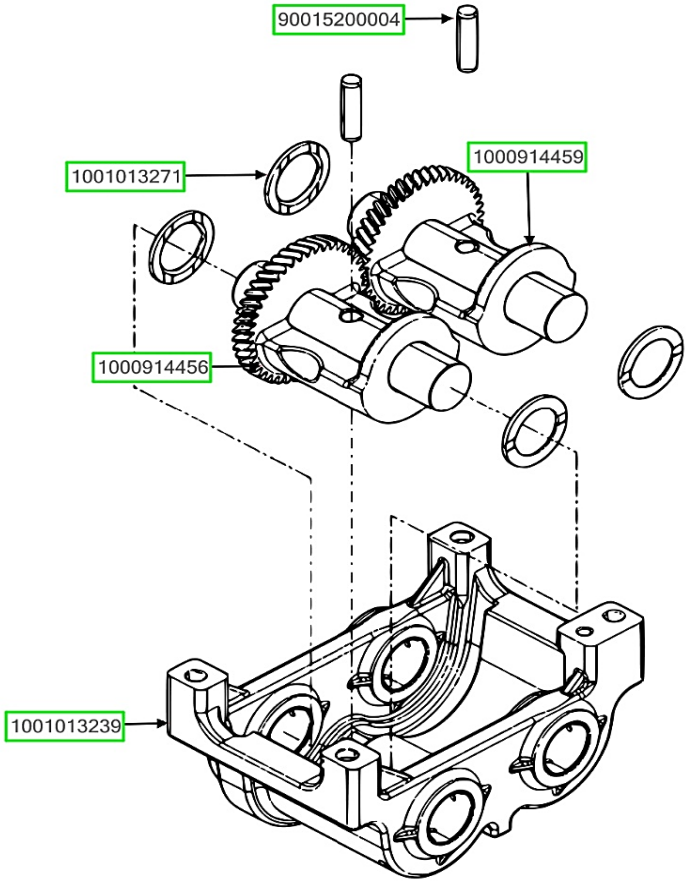

ASSB_NAME	PART NO.	NAME	QTY
SECONDARY BALANCE MACHANISM	1001013271	TLIRUST PLATE	4
	90015200004	PARALLEL PIN	2
	1000914459	SECONDARY BALANCE MACHANISM DRIVING GEAR SET	1
	1000914456	SECONDARY BALANCE MACHANISM DRIVEN GEAR SET	1
	1001013239	BALANCE SHAFT UNIT HOUSING SET	1

ASSB_NAME	PART NO.	NAME	QTY
SECONDARY BALANCE MACHANISM			

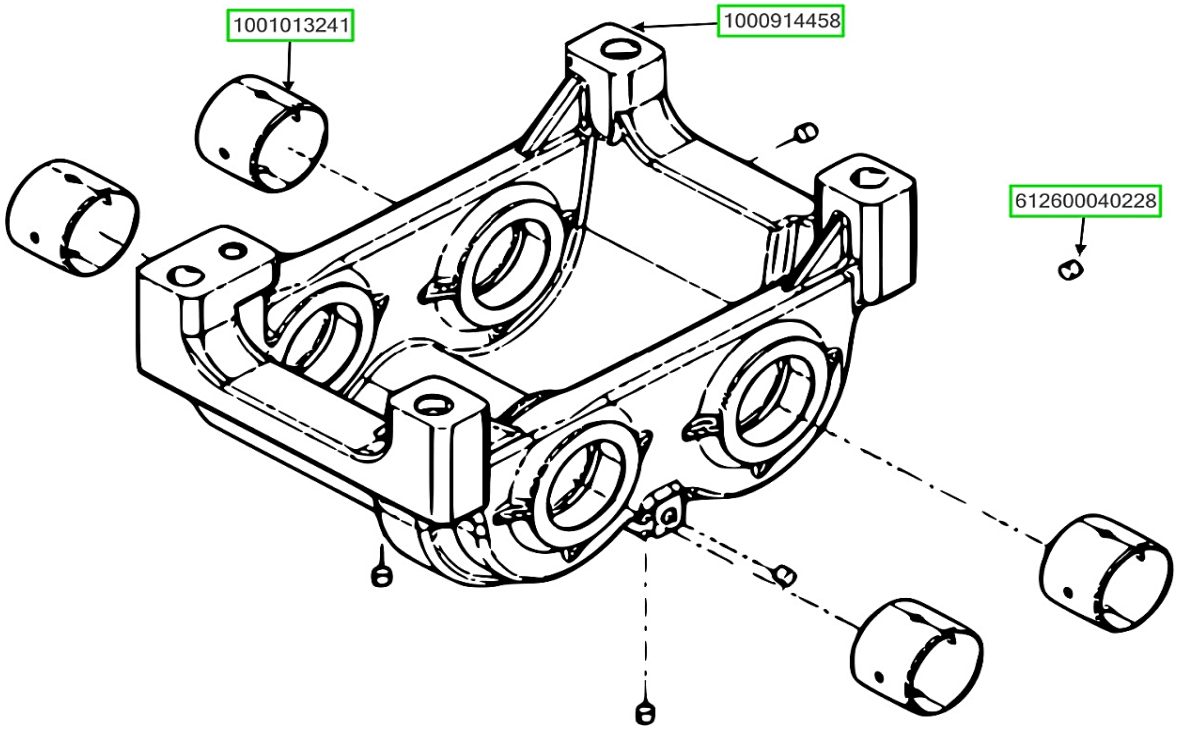

ASSB_NAME	PART NO.	NAME	QTY
BALANCE SHAFT UNIT HOUSING SET	1001013241	BALANCE SHAFT BUSH	4
	1000914458	SECONDARY BALANCE MACHANISM HOUSING	1
	612600040228	PULLING RIVET	5

ASSB_NAME	PART NO.	NAME	QTY
BALANCE SHAFT UNIT HOUSING SET			

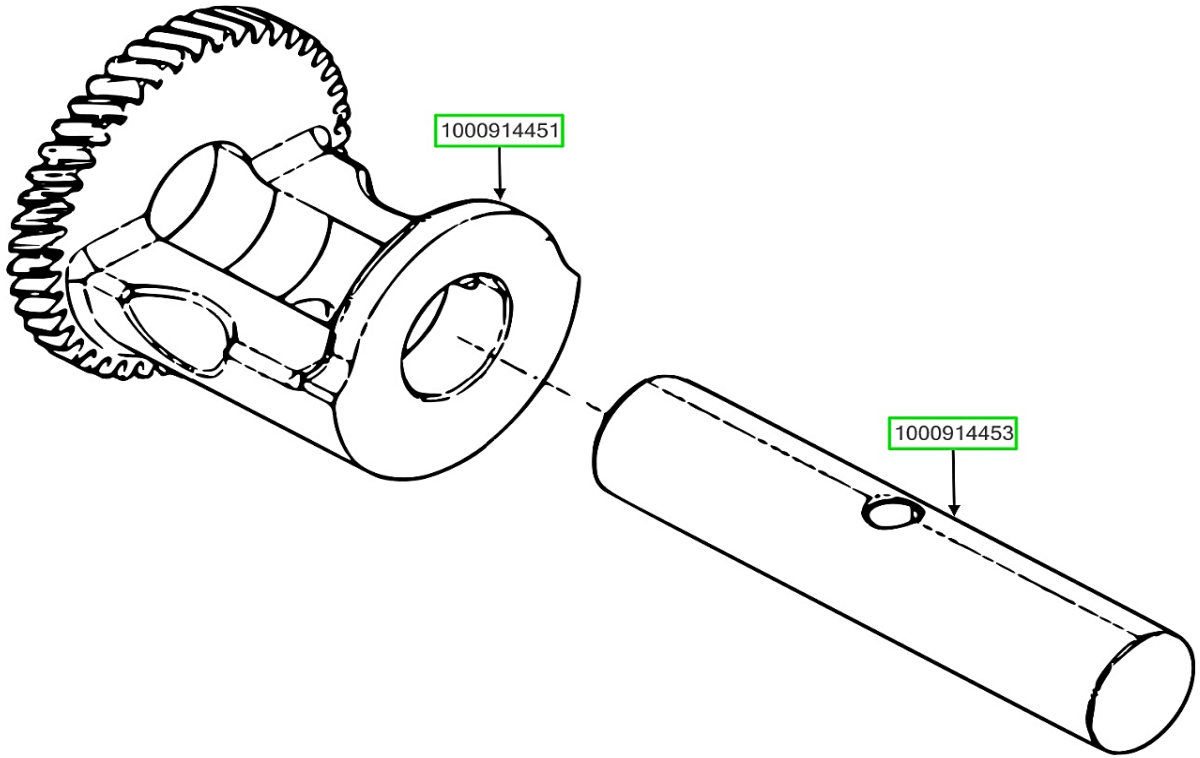

ASSB_NAME	PART NO.	NAME	QTY
SECONDARY BALANCE MACHANISM DRIVEN GEAR SET	1000914451	SECONDARY BALANCE MACHANISM DRIVEN GEAR SHAFT	1
	1000914453	SECONDARY BALANCE MACHANISM SHAFT	1

ASSB_NAME	PART NO.	NAME	QTY
SECONDARY BALANCE MACHANISM DRIVEN GEAR SET			

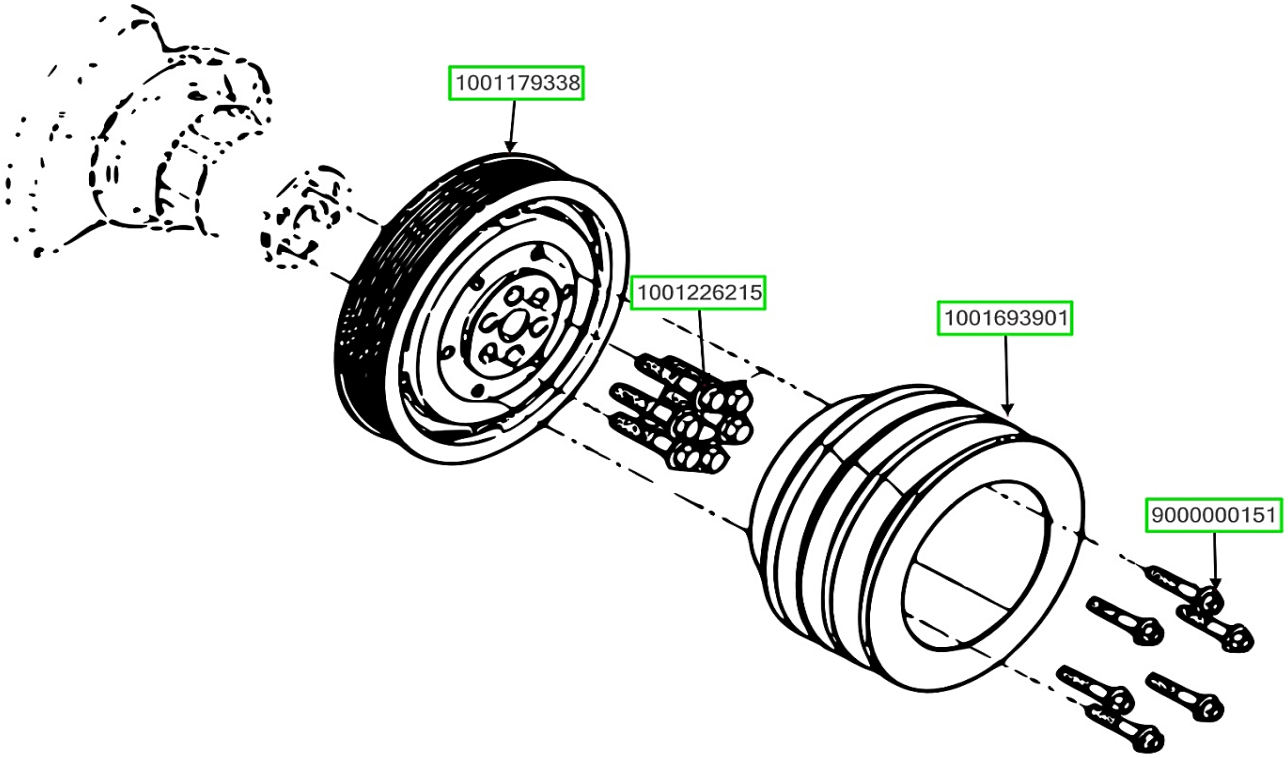

ASSB_NAME	PART NO.	NAME	QTY
CRANKSHAFT PULLEY GROUP	1001179338	RUBBER VIBRATION DAMPER	1
	1001226215	HEXAGON FLANGE BOLT	6
	1001693901	CRANKSHAFT PULLEY	1
	9000000151	HEXAGON FLANGE BOLT	6

ASSB_NAME	PART NO.	NAME	QTY
CRANKSHAFT PULLEY GROUP			

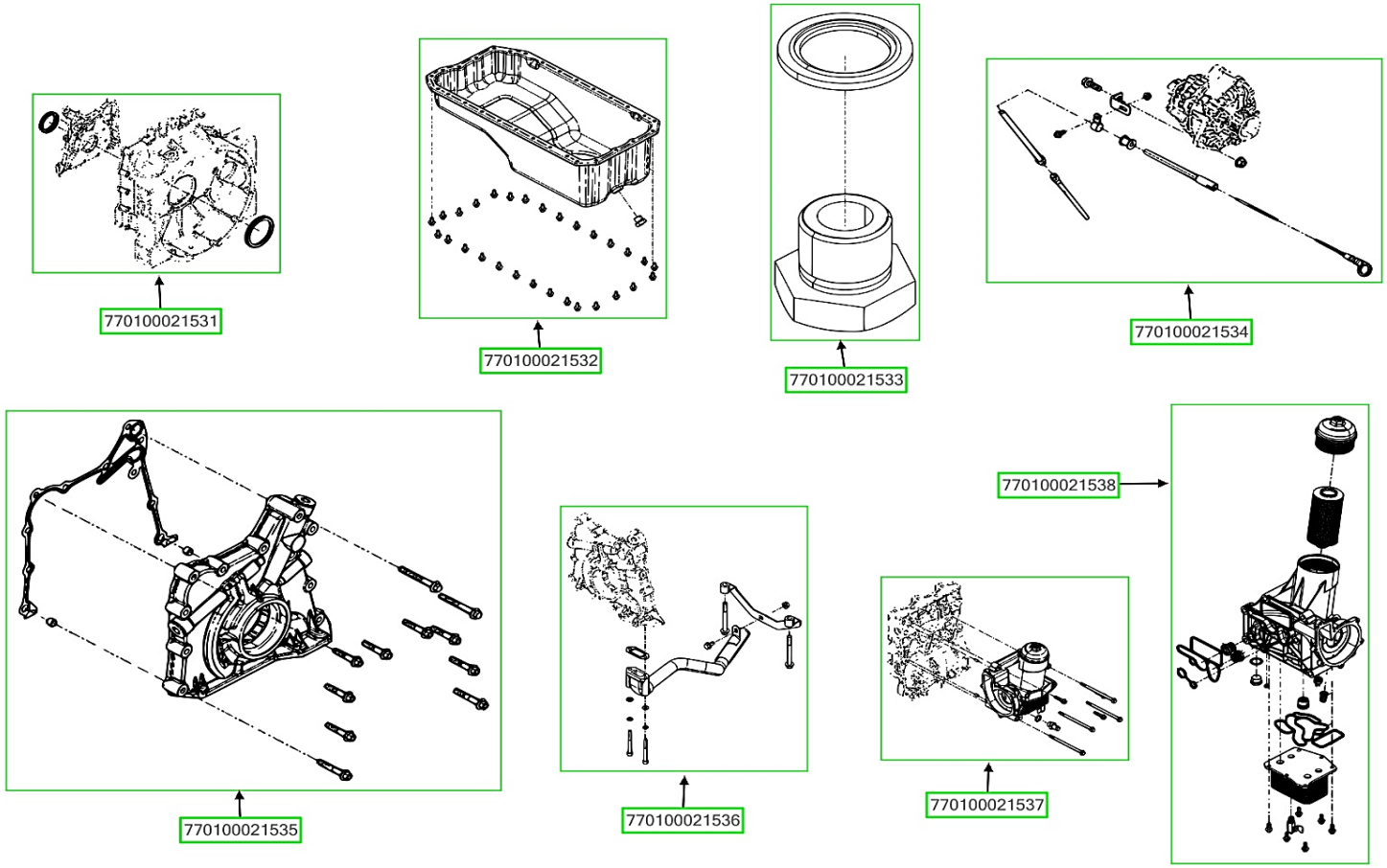

ASSB_NAME	PART NO.	NAME	QTY
GREASE SYSTEM	770100021531	OIL SEAL GROUP	1
	770100021532	OIL PAN GROUP	1
	770100021533	OIL DRAIN PLUG	1
	770100021534	OIL DIPSTICK GROUP	1
	770100021535	OIL PUMP GROUP	1
	770100021536	OIL STRAINER GROUP	1
	770100021537	OIL FILTER GROUP	1

ASSB_NAME	PART NO.	NAME	QTY
GREASE SYSTEM			

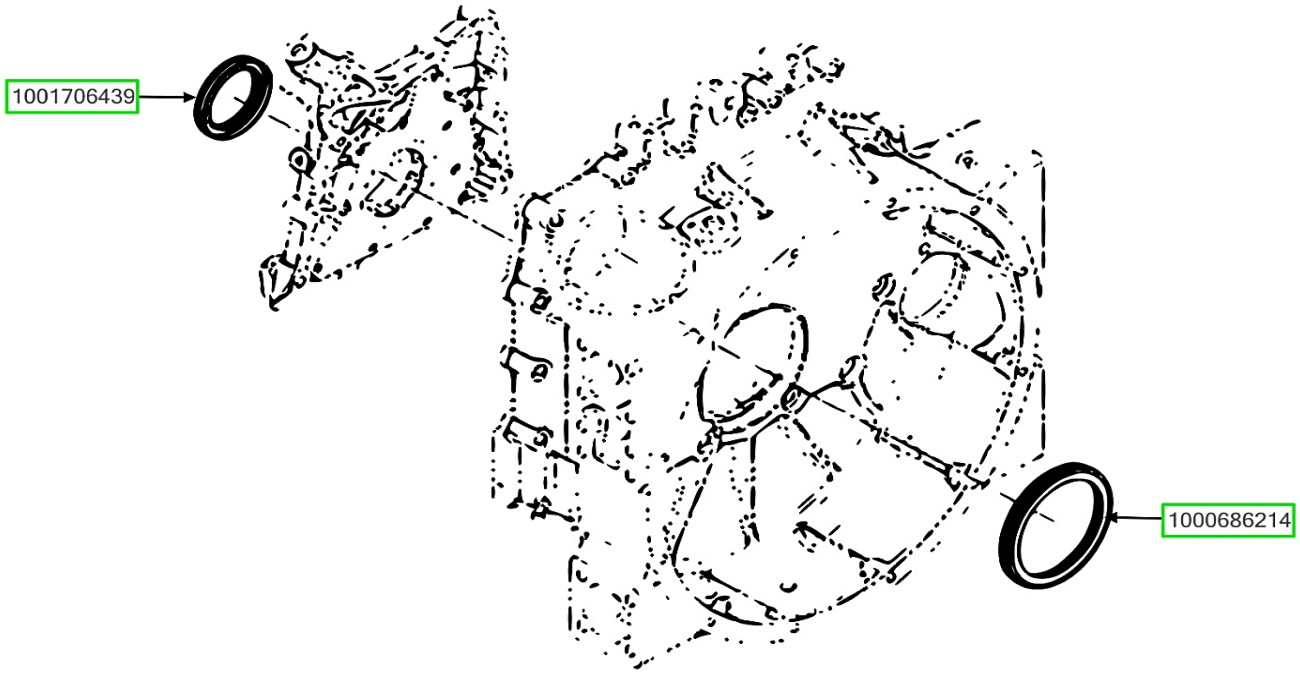

ASSB_NAME	PART NO.	NAME	QTY
Oil Seal Group	1001706439	FRONT OIL SEAL	1
	1000686214	REAR OIL SEAL	1

ASSB_NAME	PART NO.	NAME	QTY
Oil Seal Group			

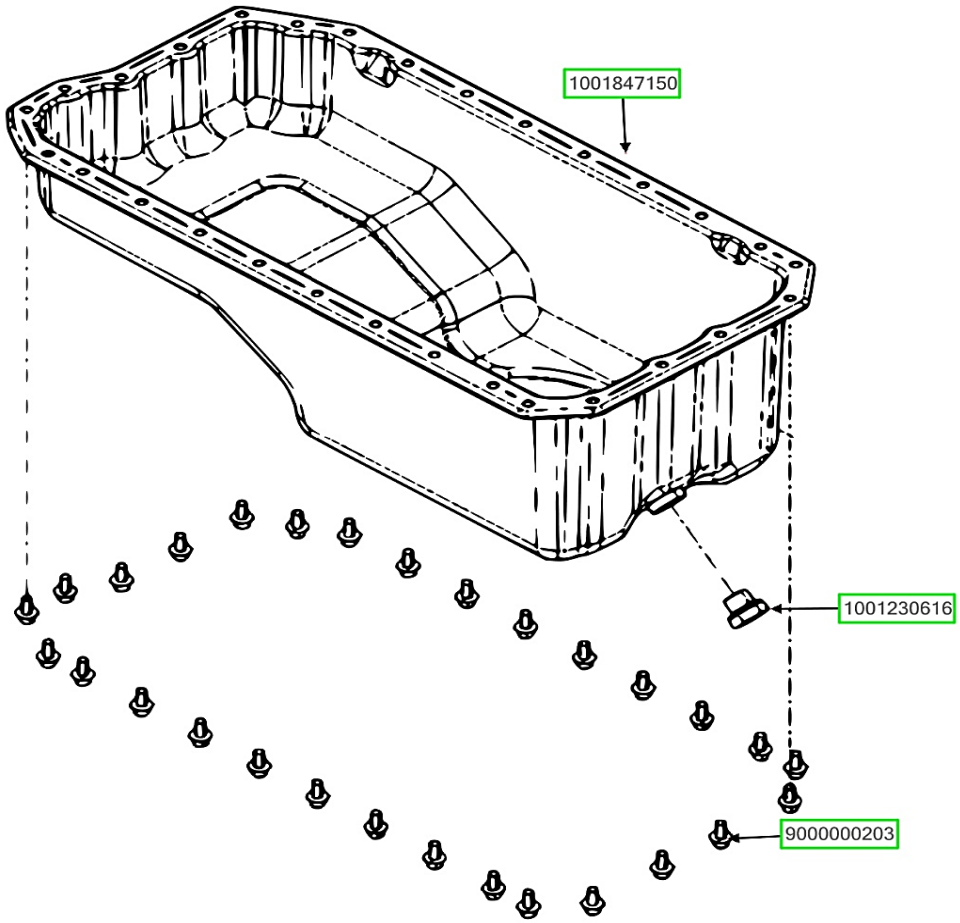

ASSB_NAME	PART NO.	NAME	QTY
OIL PAN GROUP	1001847150	OIL PAN ASSEMBLY	1
	1001230616	OIL DRAIN PLUG	1
	9000000203	HEXAGON FLANGE BOLT	29

ASSB_NAME	PART NO.	NAME	QTY
OIL PAN GROUP			

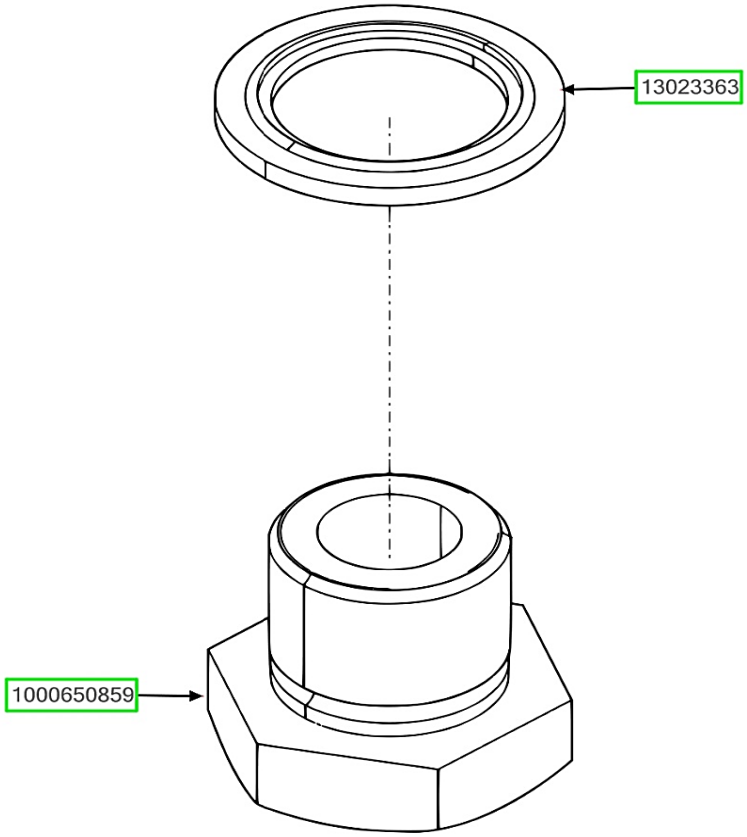

ASSB_NAME	PART NO.	NAME	QTY
OIL DRAIN PLUG	13023363	ASSEMBLED SEALING WASHER	1
	1000650859	OIL DRAIN PLUG	1

ASSB_NAME	PART NO.	NAME	QTY
OIL DRAIN PLUG			

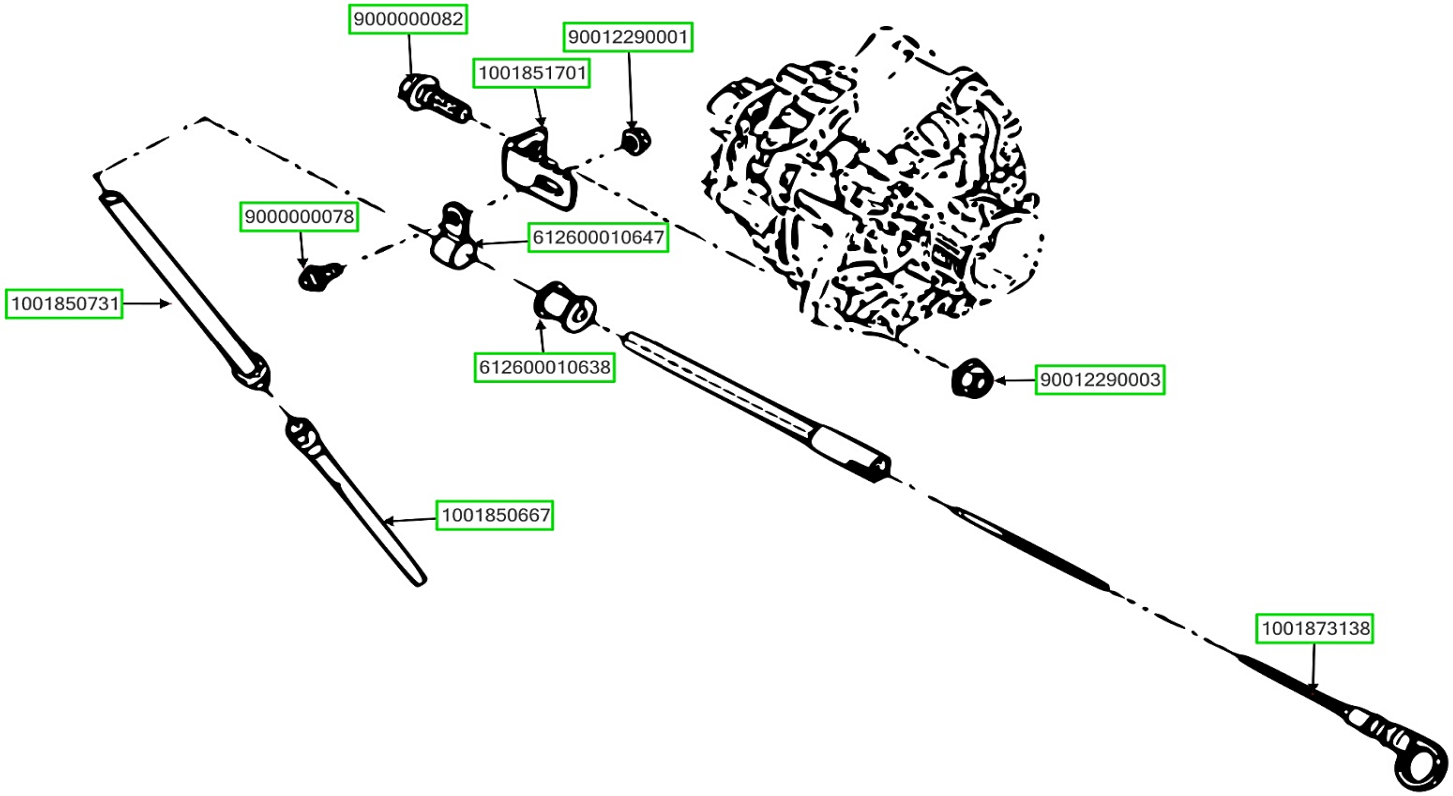

ASSB_NAME	PART NO.	NAME	QTY
OIL DIPSTICK GROUP	1001850667	DIPSTICK PIPE BELOW SET	1
	1001850731	DIPSTICK PIPE UPPER SET	1
	9000000078	HEXAGON FLANGE BOLT	1
	612600010647	SINGLE PIPE CLAMP	1
	9000000082	HEXAGON FLANGE BOLT	1
	1001851701	BRACKET	1
	612600010638	RUBBER HOOP	1

ASSB_NAME	PART NO.	NAME	QTY
OIL DIPSTICK GROUP	90012290003	HEXAGON FLANGE NUT	1
	1001873138	DIPSTICK	1
	90012290001	HEXAGON FLANGE NUT	1

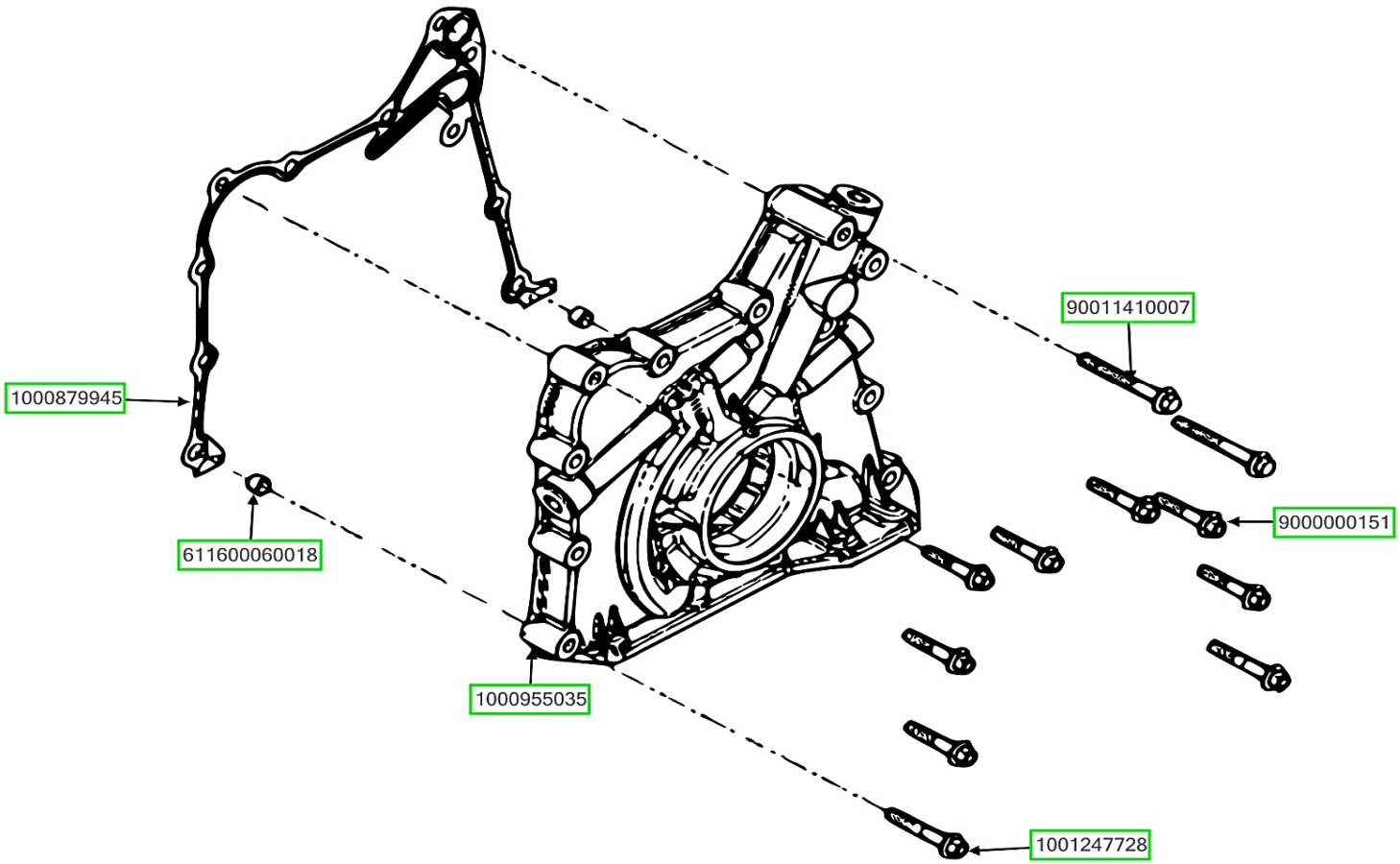

ASSB_NAME	PART NO.	NAME	QTY
OIL PUMP GROUP	1000879945	OIL PUMP GASKET	1
	611600060018	DOWEL PIN	2
	1000955035	LUBRICATING OIL PUMP	1
	1001247728	HEXAGON FLANGE BOLT	2
	90011410007	HEXAGON FLANGE BOLT	2
	9000000151	HEXAGON FLANGE BOLT	7

ASSB_NAME	PART NO.	NAME	QTY
OIL PUMP GROUP			

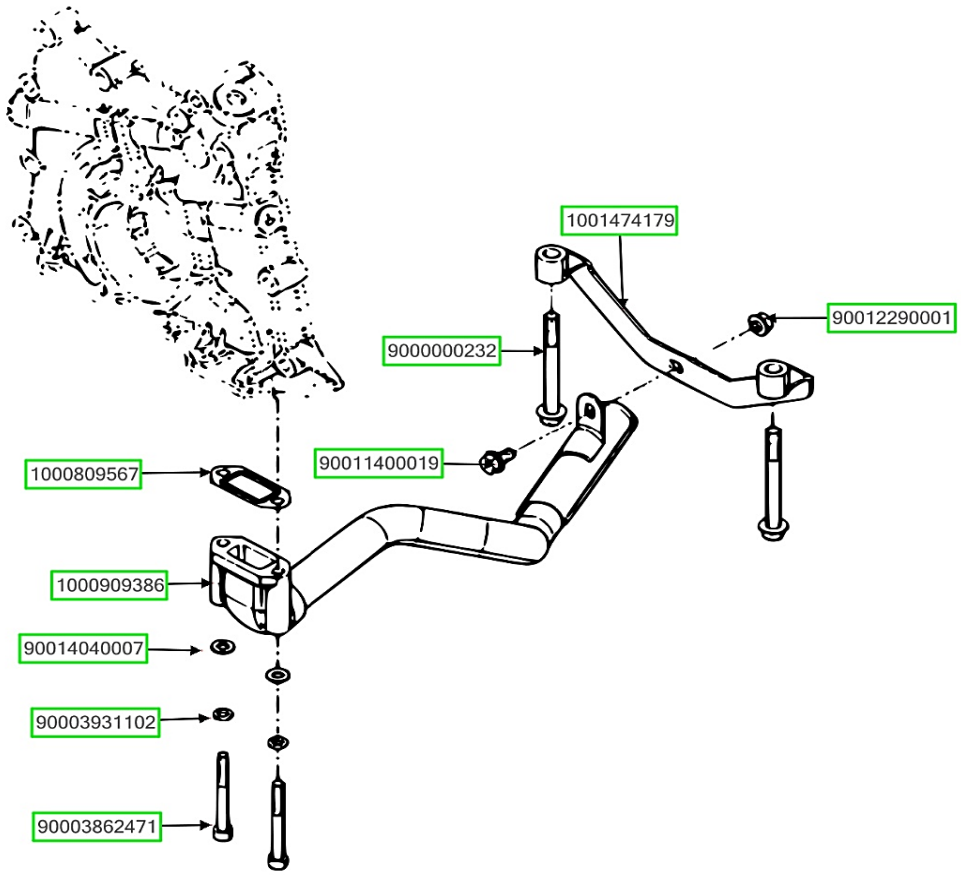

ASSB_NAME	PART NO.	NAME	QTY
OIL STRAINER GROUP	1000809567	OIL SUCTION STRAINER GASKET	1
	1000909386	FILTER ASSEMBLY	1
	90014040007	PLAIN WASHER	2
	90003931102	SPRING WASHER	2
	90003862471	SCREW	2
	90012290001	HEXAGON FLANGE NUT	1
	1001474179	OIL SUCTION STRAINER BRACKET	1

ASSB_NAME	PART NO.	NAME	QTY
OIL STRAINER GROUP	9000000232	HEXAGON FLANGE BOLT	2
	90011400019	HEXAGON FLANGE BOLT	1

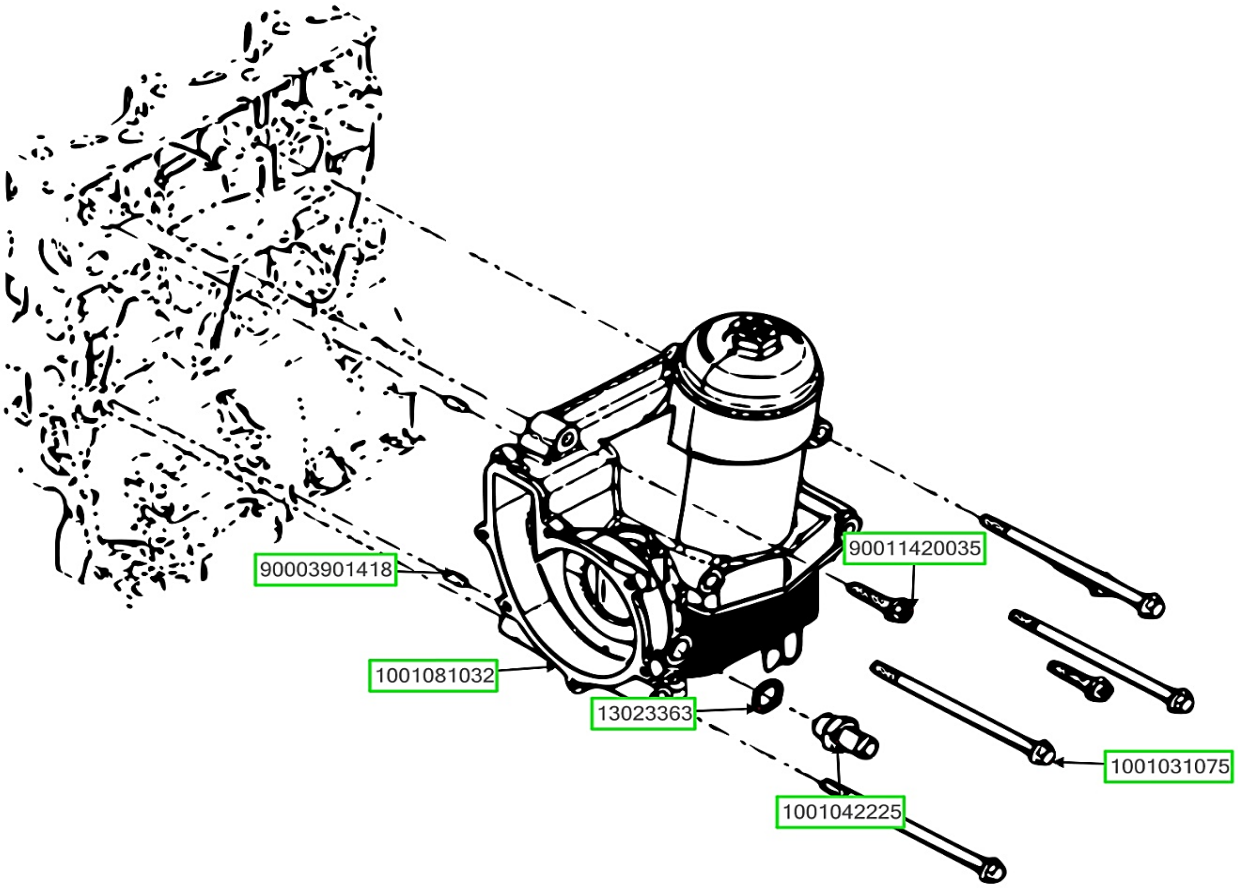

ASSB_NAME	PART NO.	NAME	QTY
OIL FILTER GROUP	90003901418	PARALLEL PIN	2
	1001081032	OIL COOLER AND FILTER ASSEMBLY	1
	13023363	ASSEMBLED SEALING WASHER	1
	1001042225	WATER PIPE CONNECTOR	1
	1001031075	HEXAGON FLANGE BOLT	4
	90011420035	HEXAGON FLANGE BOLT	3

ASSB_NAME	PART NO.	NAME	QTY
OIL FILTER GROUP			

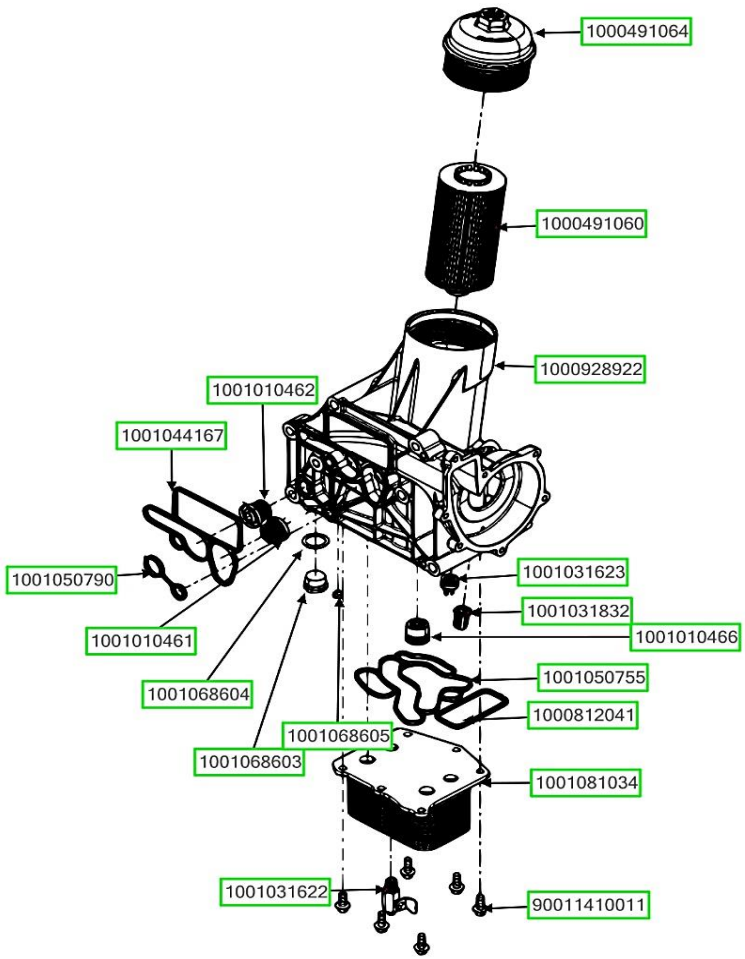

ASSB_NAME	PART NO.	NAME	QTY
OIL COOLERAND FILTER ASSEMBLY	1000491064	OIL FILTER COVER	1
	1000491060	OIL FILTER ELEMENT	1
	1000928922	OIL FILTER AND COOLER SEAT	1
	1001031623	OIL DRAINING VALVE ASSEMBLY	1
	1001031832	OIL PRESSURE RELIEF VALVE	1
	1001010466		1
	1001050755	SEAL RING	1

ASSB_NAME	PART NO.	NAME	QTY
OIL COOLERAND FILTER ASSEMBLY	1000812041	SEAL RING	1
	1001081034	OIL COOLER	1
	90011410011	HEXAGON FLANGE BOLT	6
	1001031622	WATER DRAINING VALVE	1
	1001068605	SEALER	1
	1001068603	SCREW PLUG	1
	1001068604	WASHER	1

ASSB_NAME	PART NO.	NAME	QTY
OIL COOLERAND FILTER ASSEMBLY	1001050790	SEAL RING	1
	1001044167	SEAL RING	1
	1001010462	NON-RETUM VALVE	1
	1001010461	NON-RETUM VALVE	1

ASSB_NAME	PART NO.	NAME	QTY
OIL COOLERAND FILTER ASSEMBLY			

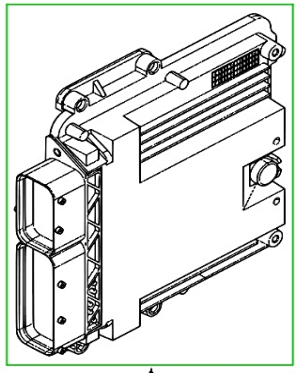

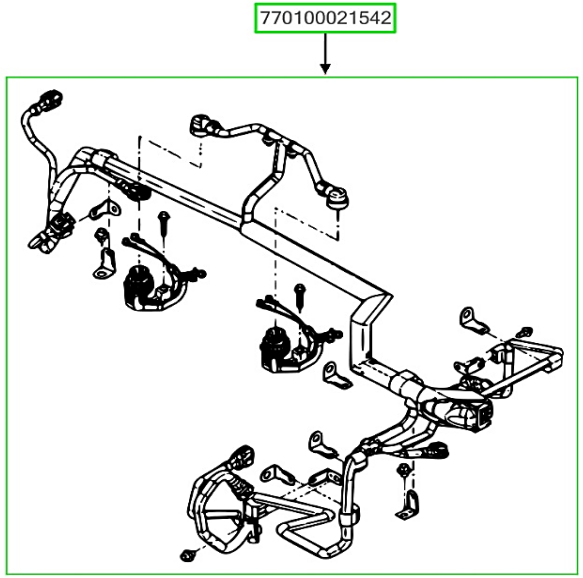

ASSB_NAME	PART NO.	NAME	QTY
ELECTRIC AND SENSOR SYSTEM	770100021541	ELECTRONIC CONTROL UNIT GROUP	1
	770100021542	ELECTRONIC CONTROL SYSTEM HARNESS GROUP	1

ASSB_NAME	PART NO.	NAME	QTY
ELECTRIC AND SENSOR SYSTEM			

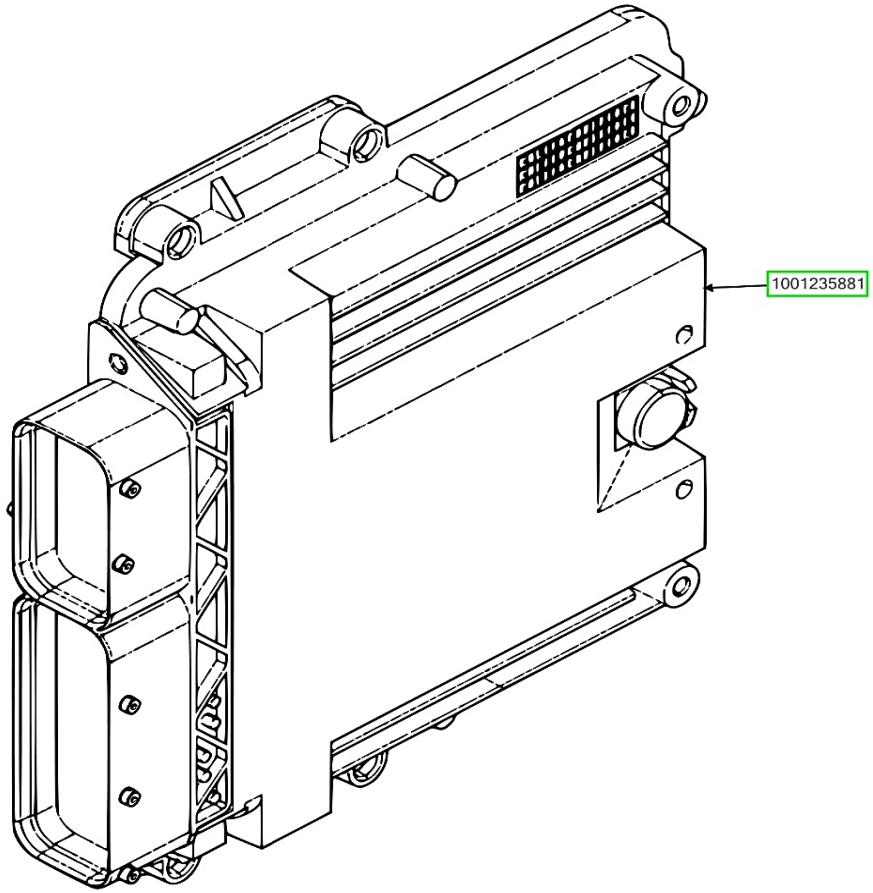

ASSB_NAME	PART NO.	NAME	QTY
ELECTRONIC CONTROL UNIT GROUP	1001235881	ELECTRONIC CONTROL UNIT	1

ASSB_NAME	PART NO.	NAME	QTY
ELECTRONIC CONTROL UNIT GROUP			

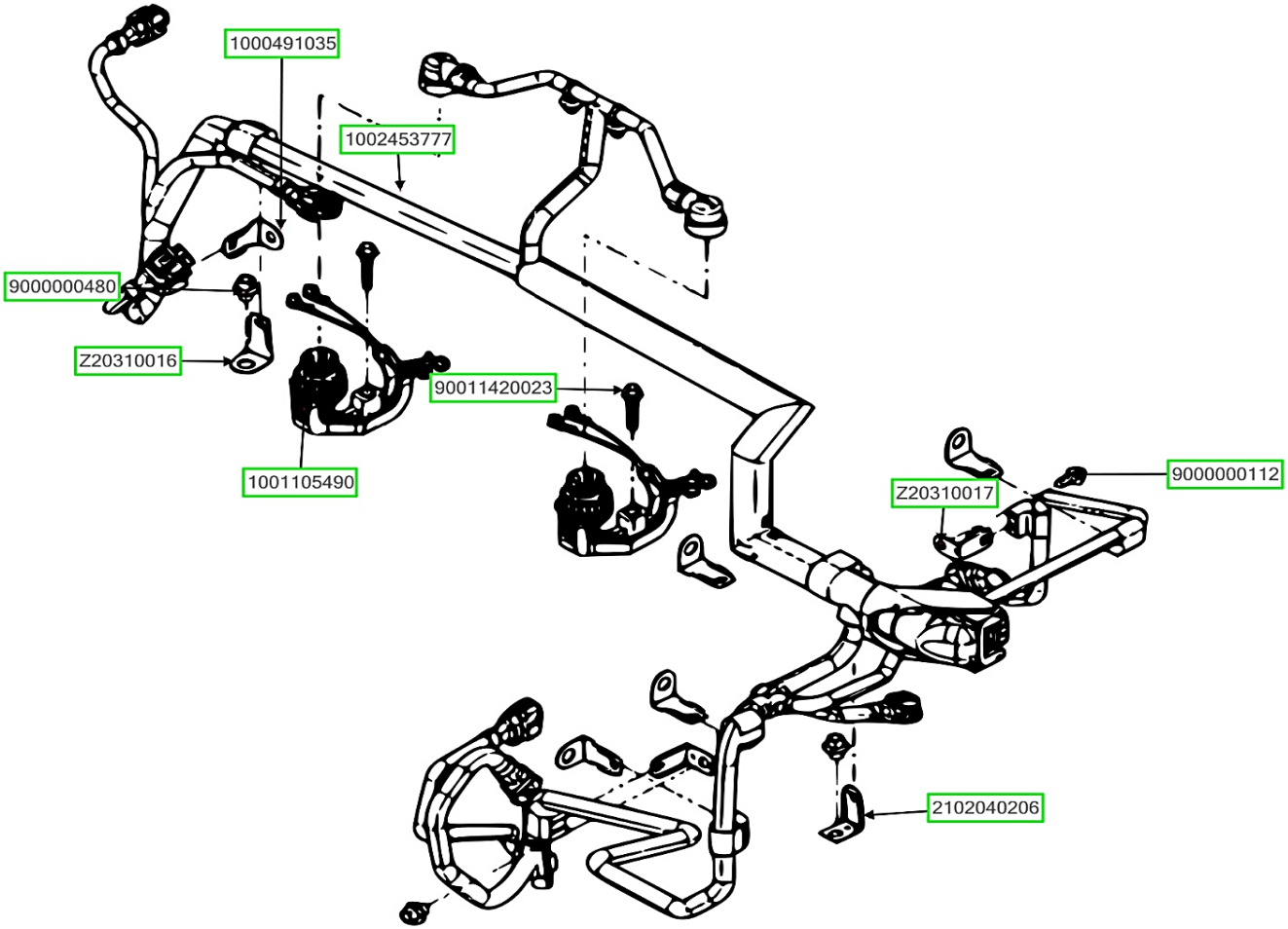

ASSB_NAME	PART NO.	NAME	QTY
ELECTRONIC CONTROL SYSTEM HARNESS GROUP	1002453777	ENGINE HARNESS	1
	1000491035	HARNESS BRACKET	1
	9000000480	HEXAGON FLANGE BOLT	3
	Z20310016	HARNESS BRACKET	5
	1001105490	FUEL INJECTOR HARNESS	2
	2102040206	HARNESS BRACKET	2
	90011420023	HEXAGON FLANGE BOLT	2

ASSB_NAME	PART NO.	NAME	QTY
ELECTRONIC CONTROL SYSTEM HARNESS GROUP	Z20310017	HARNESS BRACKET	1
	9000000112	HEXAGON FLANGE BOLT	1

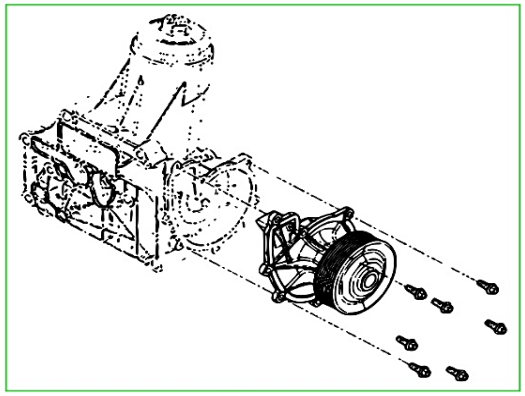

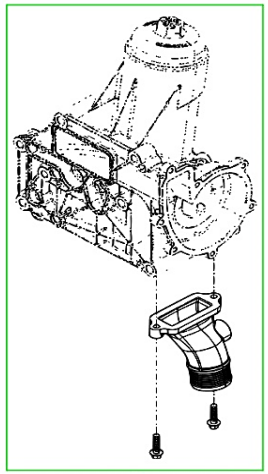

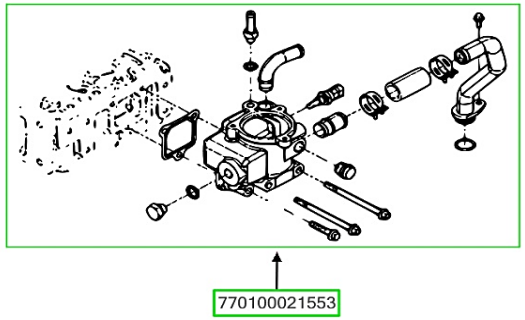

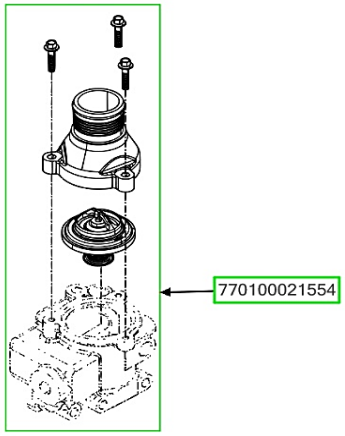

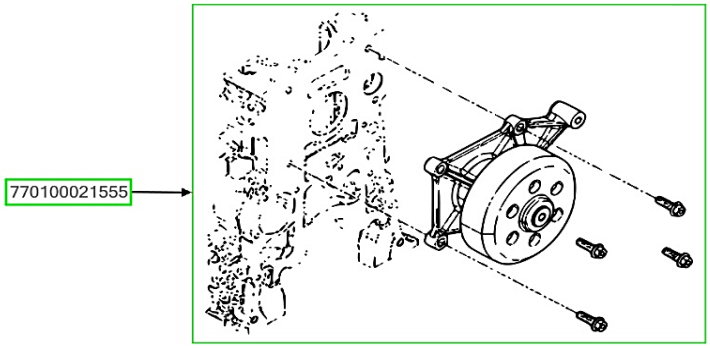

ASSB_NAME	PART NO.	NAME	QTY
COOLING SYSTEM	770100021551	WATER PUMP GROUP	1
	770100021552	WATER PUMP INLET PIPE GROUP	1
	770100021553	WATER OUTLET PIPE GROUP	1
	770100021554	THERMOSTAT GROUP	1
	770100021555	FAN BRACKET GROUP	1

ASSB_NAME	PART NO.	NAME	QTY
COOLING SYSTEM			

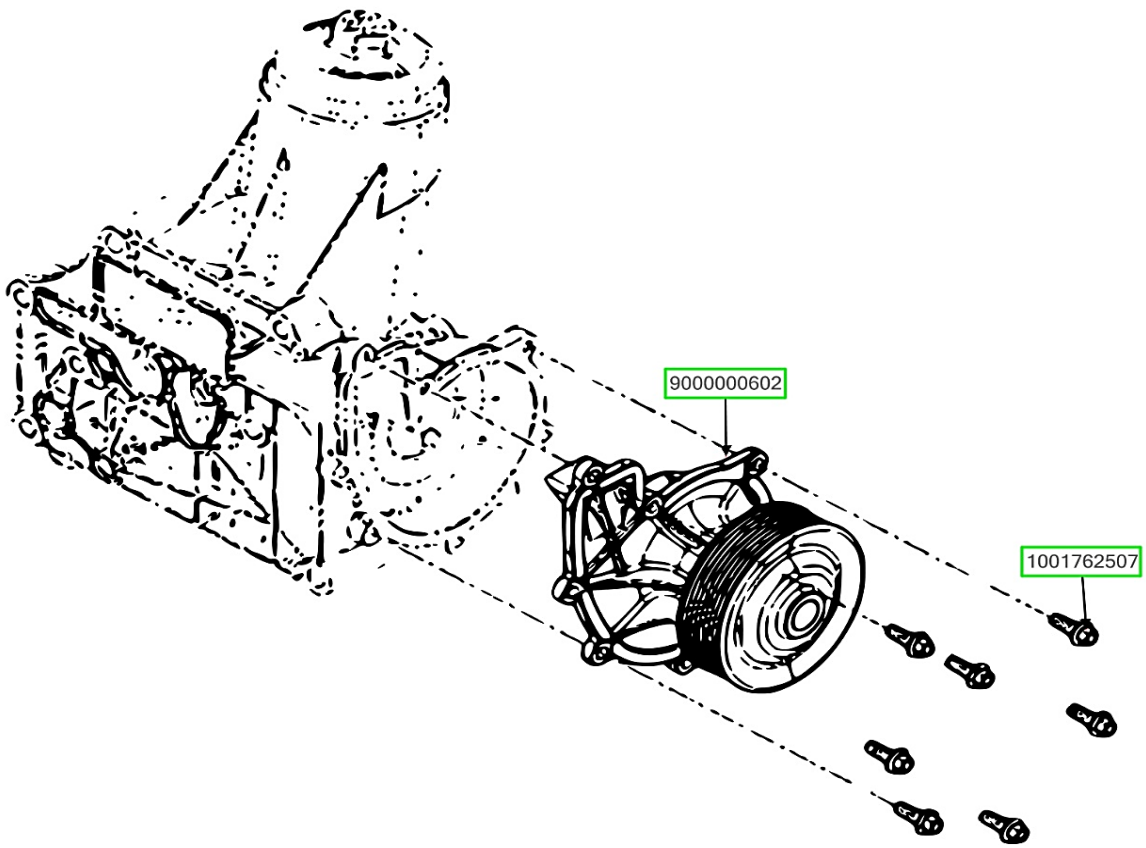

ASSB_NAME	PART NO.	NAME	QTY
WATER PUMP GROUP	1001762507	WATER PUMP	1
	9000000602	HEXAGON FLANGE BOLT	7

ASSB_NAME	PART NO.	NAME	QTY
WATER PUMP GROUP			

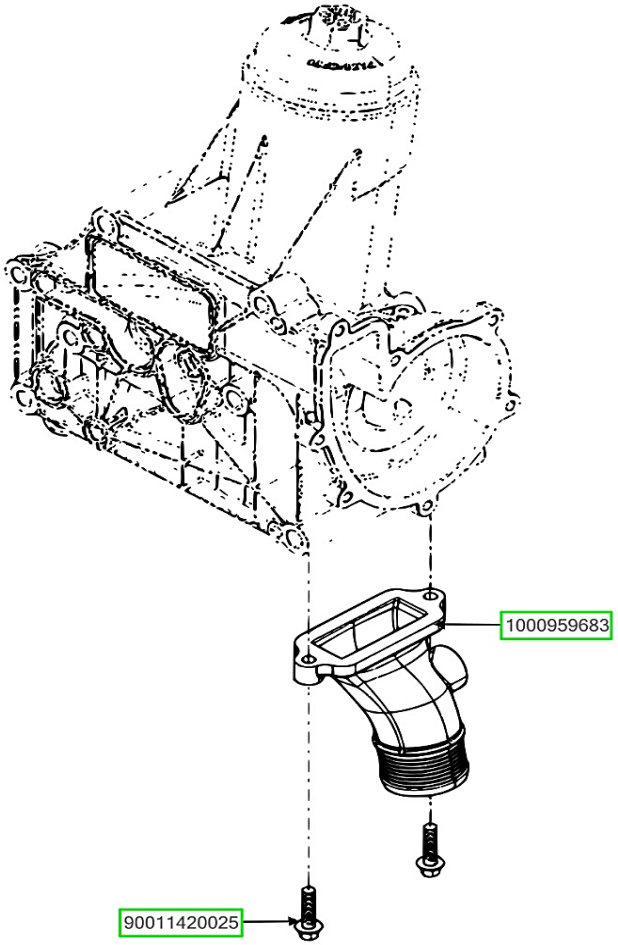

ASSB_NAME	PART NO.	NAME	QTY
WATER PUMP INLET PIPE GROUP	1000959683	WATER PMNP WATER PIPE	1
	90011420025	HEXAGON FLANGE BOLT	2

ASSB_NAME	PART NO.	NAME	QTY
WATER PUMP INLET PIPE GROUP			

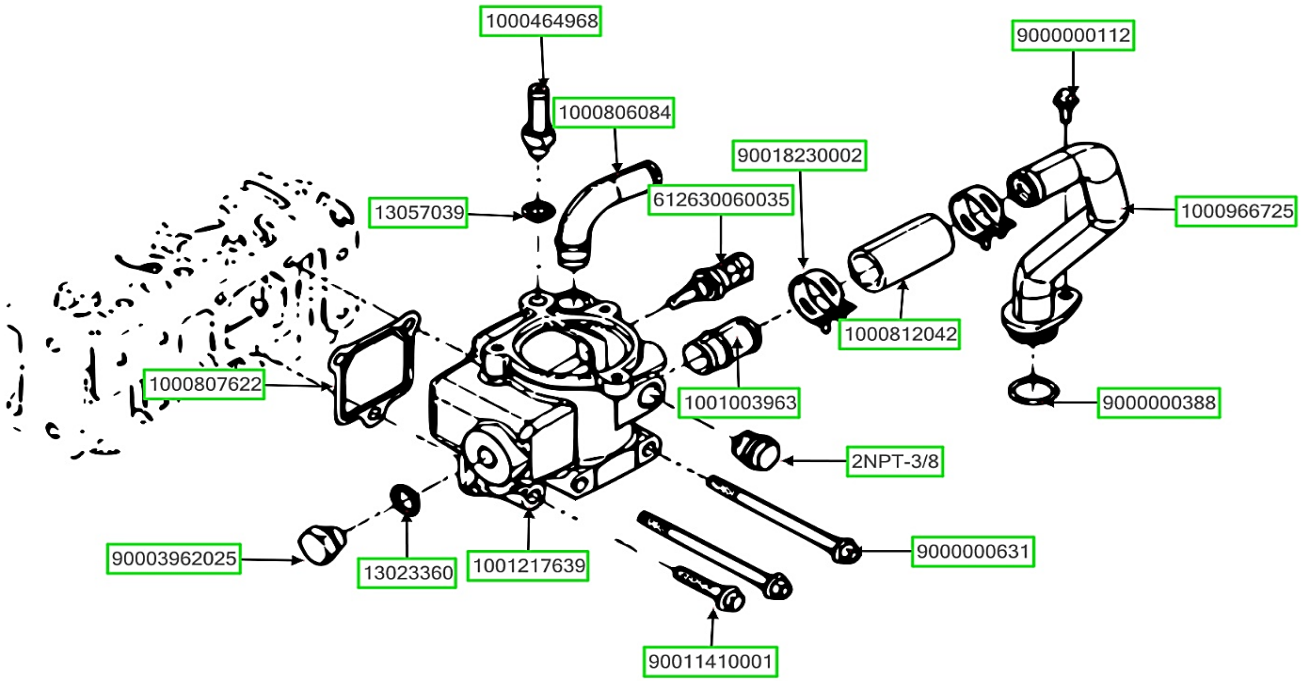

ASSB_NAME	PART NO.	NAME	QTY
WATER OUTLET PIPE GROUP	1000807622	SEALING GASKET	1
	90003962025	HEXAGON SCREW PLUG	1
	13023360	ASSEMBLED SEALING WASHER	1
	1001217639	WATER-OUTLET PIPE	1
	90011410001	HEXAGON FLANGE BOLT	1
	9000000631	HEXAGON FLANGE BOLT	2
	2NPT-3/8	SCREW PLUG	1

ASSB_NAME	PART NO.	NAME	QTY
WATER OUTLET PIPE GROUP	1001003963	WATER PIPE CONNECTOR	1
	90018230002	HOSES CLAMP	2
	1000812042	COOLANT CONNECTING RUBBER PIPE	1
	9000000388	O-RING	1
	1000966725	WATER PMNP WATER PIPE	1
	9000000112	HEXAGON FLANGE BOLT	1
	612630060035	TEMPERATURE SENSOR	1

ASSB_NAME	PART NO.	NAME	QTY
WATER OUTLET PIPE GROUP	1000806084	PIPE JOINT	1
	1000464968	VENTING PIPE	1
	13057039	ASSEMBLED SEALING WASHER	1

ASSB_NAME	PART NO.	NAME	QTY
WATER OUTLET PIPE GROUP			

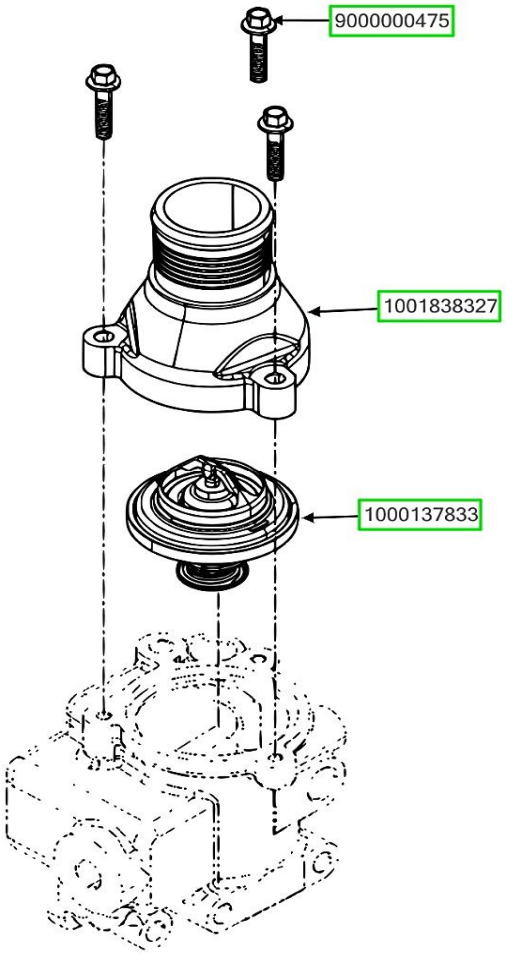

ASSB_NAME	PART NO.	NAME	QTY
THERMOSTAT GROUP	9000000475	HEXAGON FLANGE BOLT	3
	1001838327	THENNOSTAT COVER	1
	1000137833	THENNOSTAT	1

ASSB_NAME	PART NO.	NAME	QTY
THERMOSTAT GROUP			

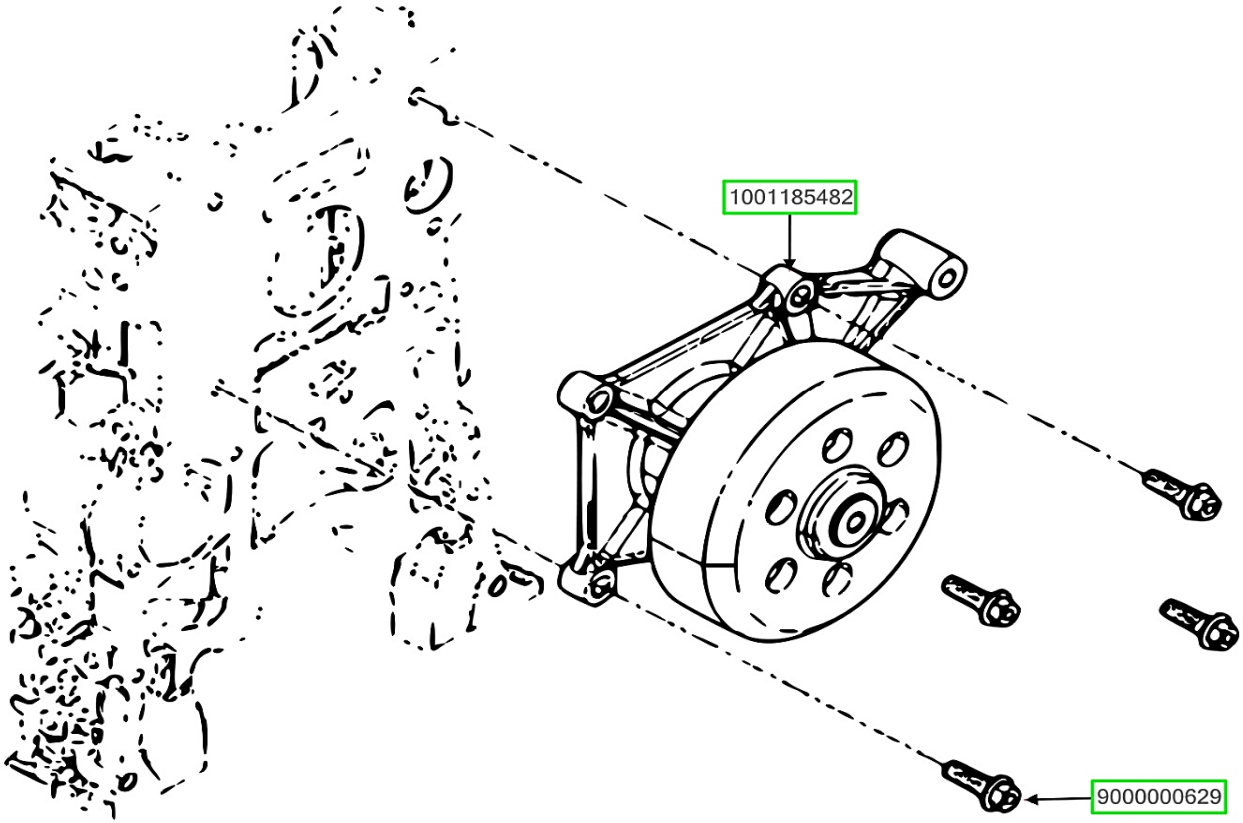

ASSB_NAME	PART NO.	NAME	QTY
FAN BRACKET GROUP	1001185482	FAN BRACKET ASSEMBLY	1
	9000000629	HEXAGON FLANGE BOLT	4

ASSB_NAME	PART NO.	NAME	QTY
FAN BRACKET GROUP			

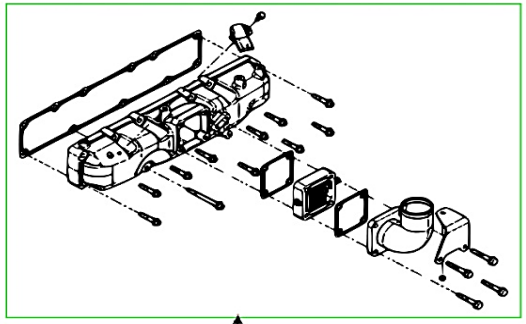

770100021561

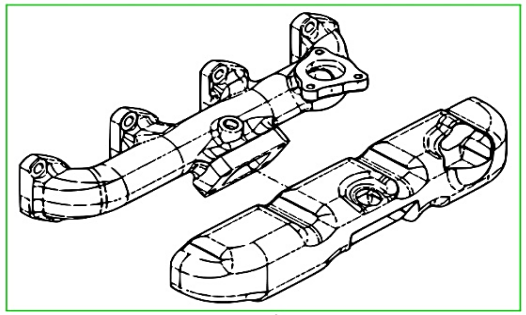

770100021562

770100021563

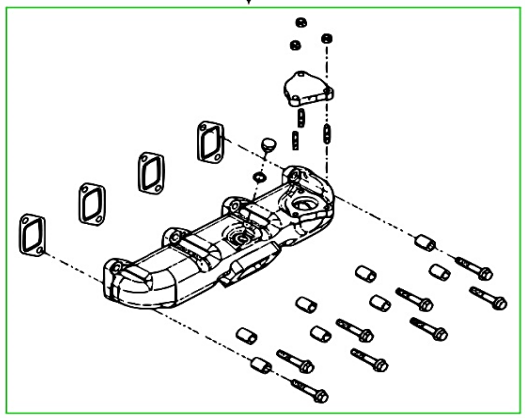

ASSB_NAME	PART NO.	NAME	QTY
INTAKE - EXHAUST SYSTEM	770100021561	INTAKE MANIFOLD GROUP	1
	770100021562	EXHAUST MANIFOLD GROUP	1
	770100021563	EXHAUST MANIFOLD HEAT SHIELD ASSEMBLY	1

ASSB_NAME	PART NO.	NAME	QTY
INTAKE - EXHAUST SYSTEM			

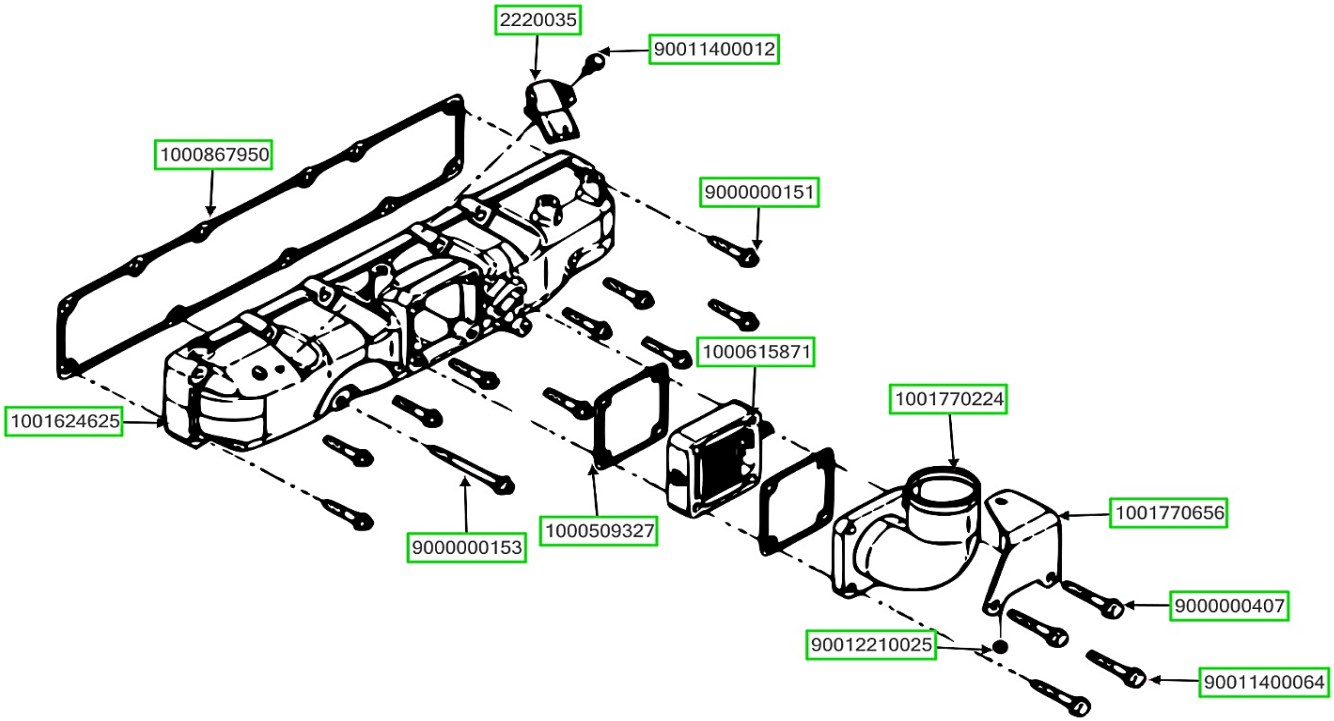

ASSB_NAME	PART NO.	NAME	QTY
INTAKE MANIFOLD GROUP	1001770227	INTAKE CONNECTING PIPE	1
	1000867950	INTAKE MANIFOLD GASKET	1
	90011400012	HEXAGON FLANGE BOLT	1
	2220035	PRESSURE AND TEMPERATURE SENSOR	1
	1001624625	INTAKE MANIFOLD	1
	9000000151	HEXAGON FLANGE BOLT	10
	1000509327	INTAKE MANIFOLD GASKET	2

ASSB_NAME	PART NO.	NAME	QTY
INTAKE MANIFOLD GROUP	1000615871	HEATER	1
	1001770224		1
	1001770656	FUEL PIPE BRACKET	1
	9000000407	HEXAGON FLANGE BOLT	2
	90011400064	HEXAGON FLANGE BOLT	2
	90012210025	HEXAGON NUTS, STYLE 1	1
	9000000153	HEXAGON FLANGE BOLT	1

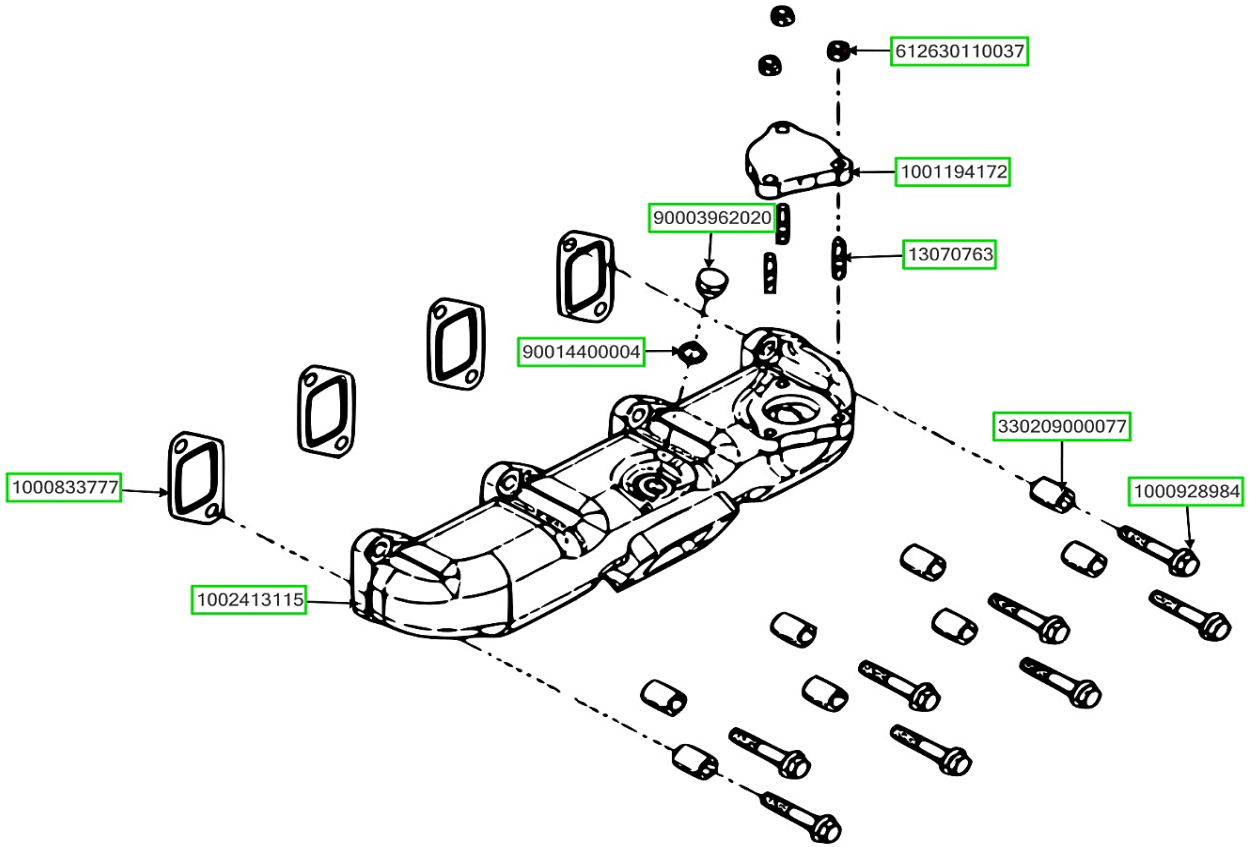

ASSB_NAME	PART NO.	NAME	QTY
EXHAUST MANIFOLD GROUP	612630110037	HEXAGON NUT	3
	1001194172	COVER	1
	13070763	DOUBLE END STUD	3
	1002413115	EXHAUST MANIFOLD HEAT SHIELD ASSEMBLY	1
	330209000077	SLEEVE	8
	1000928984	EXHAUST MANIFOLD BOLT	8
	1000833777	GASKET	4

ASSB_NAME	PART NO.	NAME	QTY
EXHAUST MANIFOLD GROUP	90014400004	SEALING WASHER	1
	90003962020	HEXAGON SCREW PLUG	1

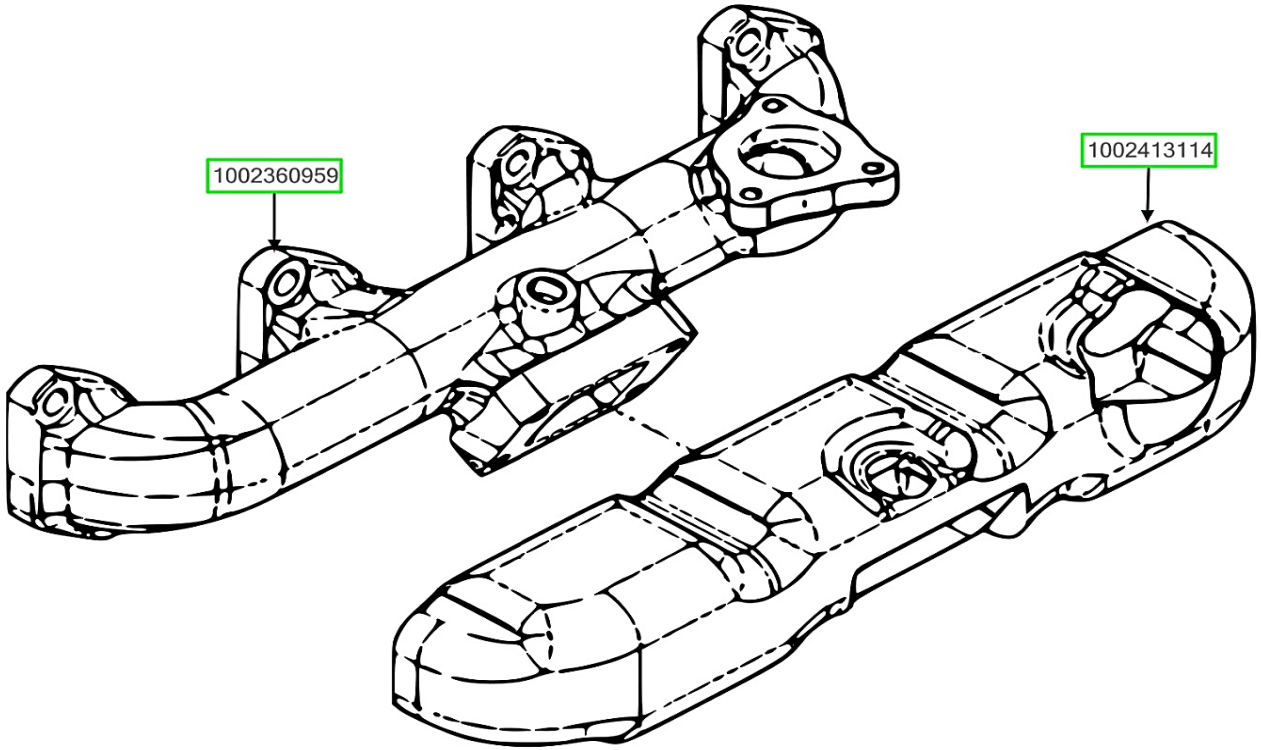

ASSB_NAME	PART NO.	NAME	QTY
EXHAUST MANIFOLD HEAT SHIELD ASSEMBLY	1002360959	EXHAUST MANIFOLD	1
	1002413114	EXHAUST MANIFOLD HEAT SHIELD	1

ASSB_NAME	PART NO.	NAME	QTY
EXHAUST MANIFOLD HEAT SHIELD ASSEMBLY			

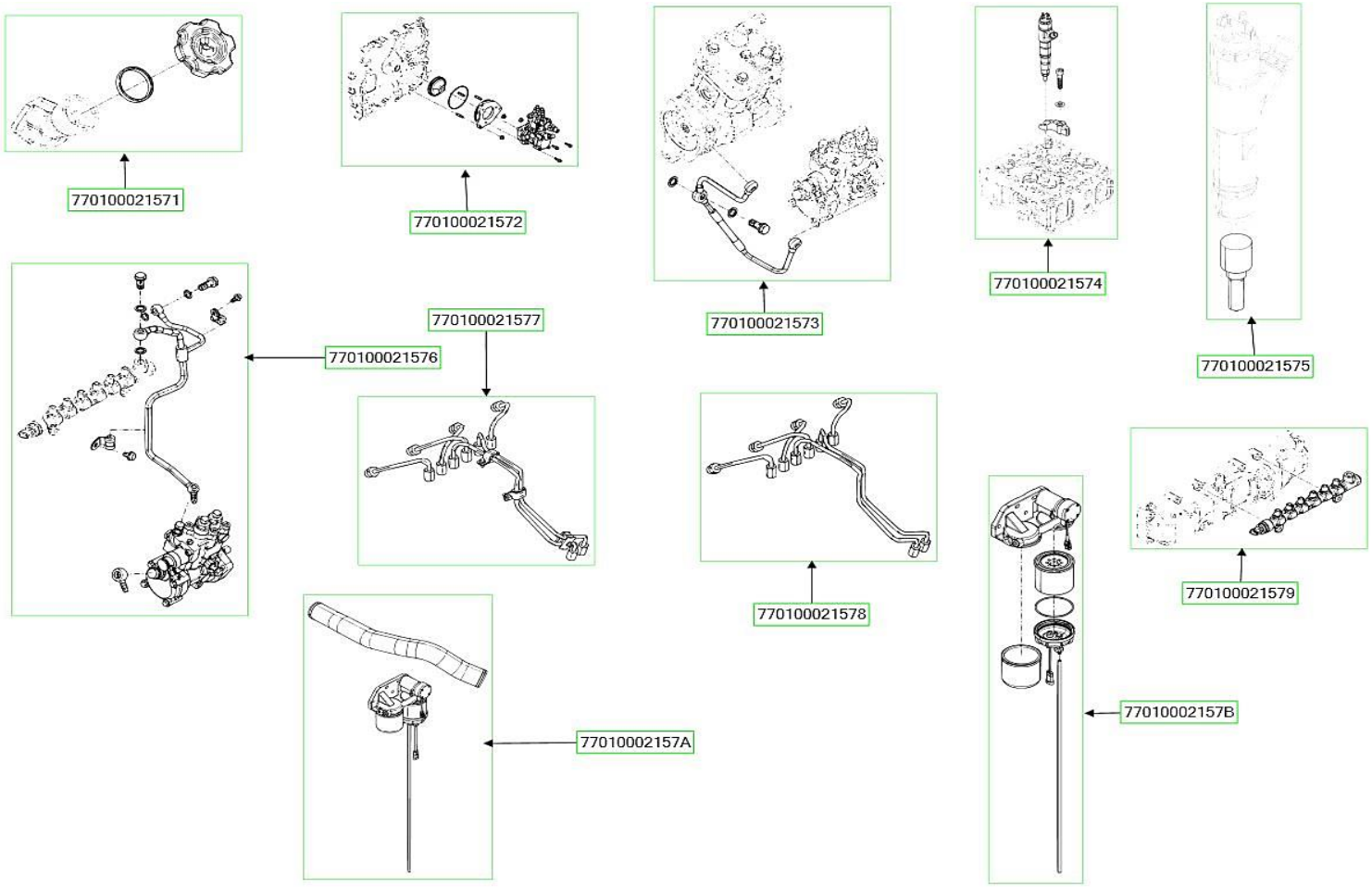

ASSB_NAME	PART NO.	NAME	QTY
FUEL SYSTEM	770100021571	OIL CAP ASSY	1
	770100021572	FUEL INJECTION PUMP GROUP	1
	770100021573	FUEL INJECTION PUMP OIL PIPE GROUP	1
	770100021574	FUEL INJECTOR GROUP	1
	770100021575	FUEL INJECTOR	1
	770100021576	LOW PRESSURE FUEL PIPE GROUP	1
	770100021577	HIGH PRESSURE FUEL PIPE GROUP	1

ASSB_NAME	PART NO.	NAME	QTY
FUEL SYSTEM	770100021578	HIGH PRESSURE FUEL PIPE ASSEMBLY	1
	770100021579	COMMON RAIL GROUP	1
	77010002157A	PACKING BOX CHASSIS PARTS GROUP	1
	77010002157B	FUEL SYSTEM PROTECTOR	1

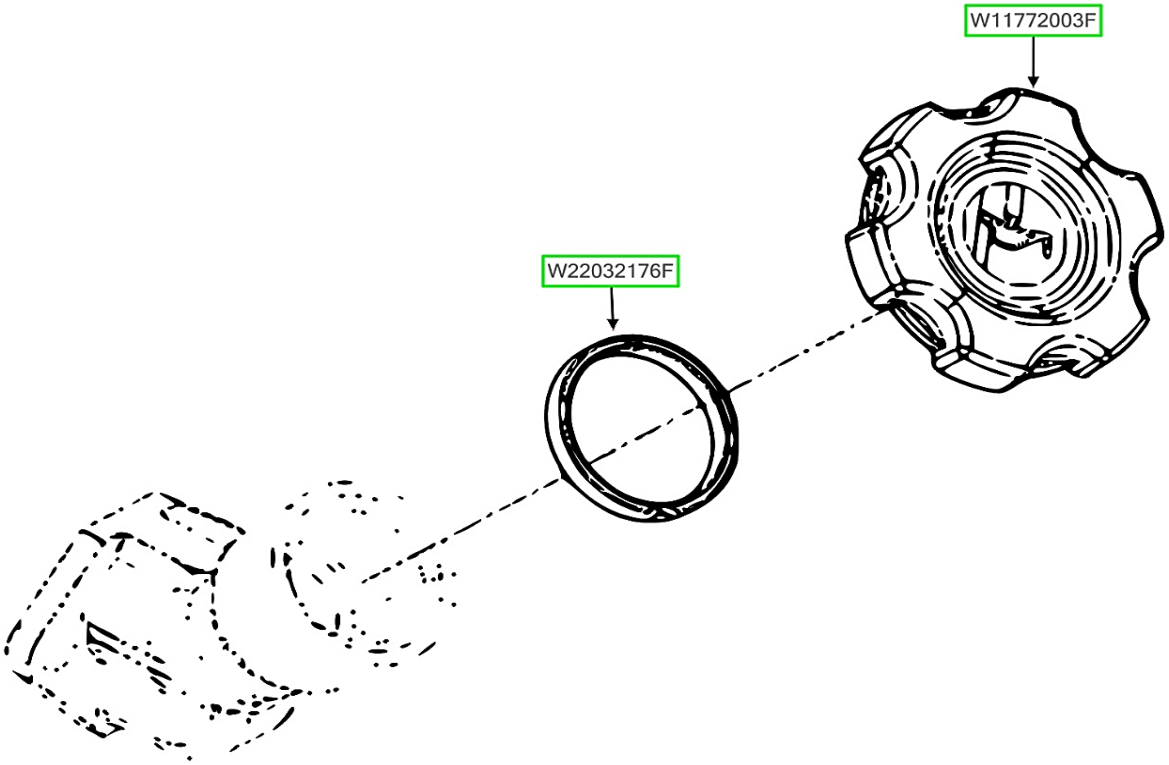

ASSB_NAME	PART NO.	NAME	QTY
OIL CAP ASSY	W11772003F	OIL FILLER CAP	1
	W22032176F	SEAL RING	1

ASSB_NAME	PART NO.	NAME	QTY
OIL CAP ASSY			

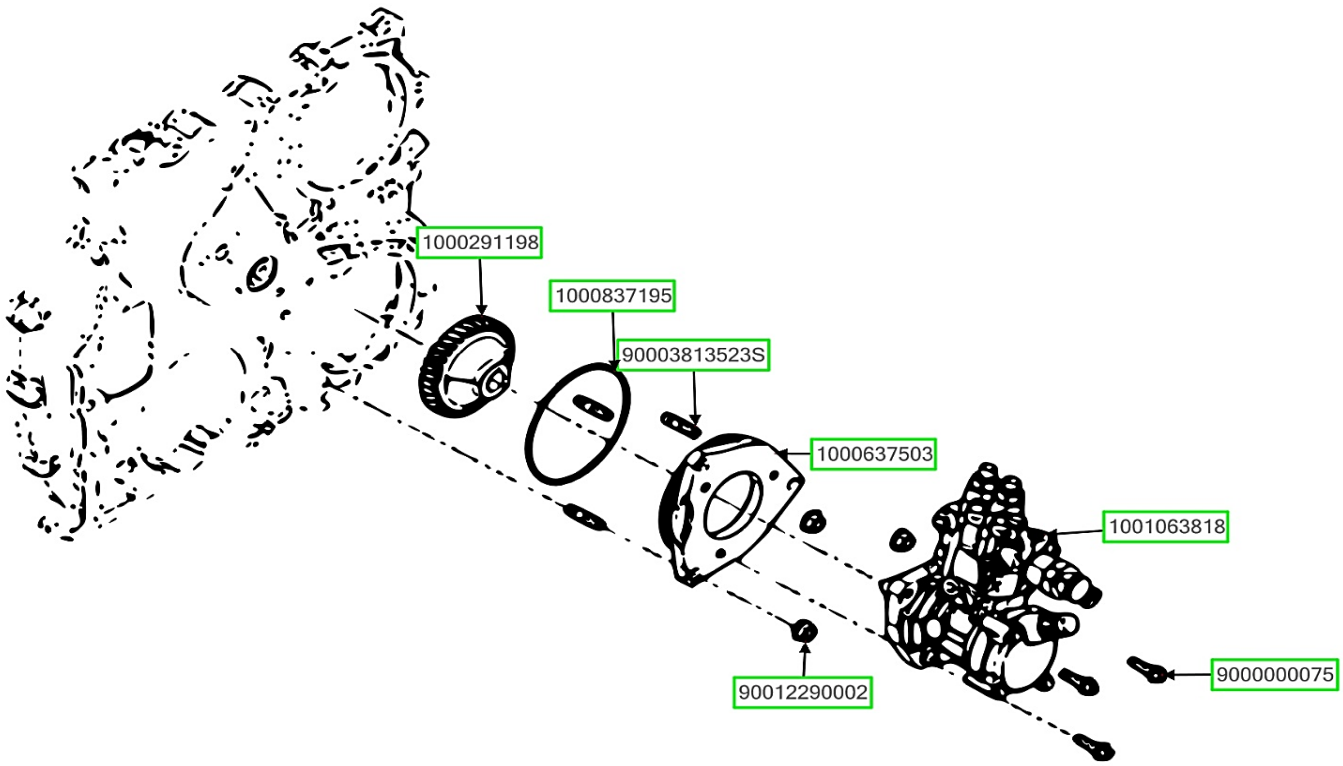

ASSB_NAME	PART NO.	NAME	QTY
FUEL INJECTION PUMP GROUP	1000291198	FUEL INJECTION PMNP GEAR	1
	1000837195	O-RING	1
	90003813523S	DOUBLE END STUD	3
	1000637503	FUEL INJECTION PUMP FLANGE	1
	90012290002	HEXAGON FLANGE NUT	3
	1001063818	FUEL INJECTION PMNP ASSEMBLY	1
	9000000075	HEXAGON FLANGE BOLT	3

ASSB_NAME	PART NO.	NAME	QTY
FUEL INJECTION PUMP GROUP			

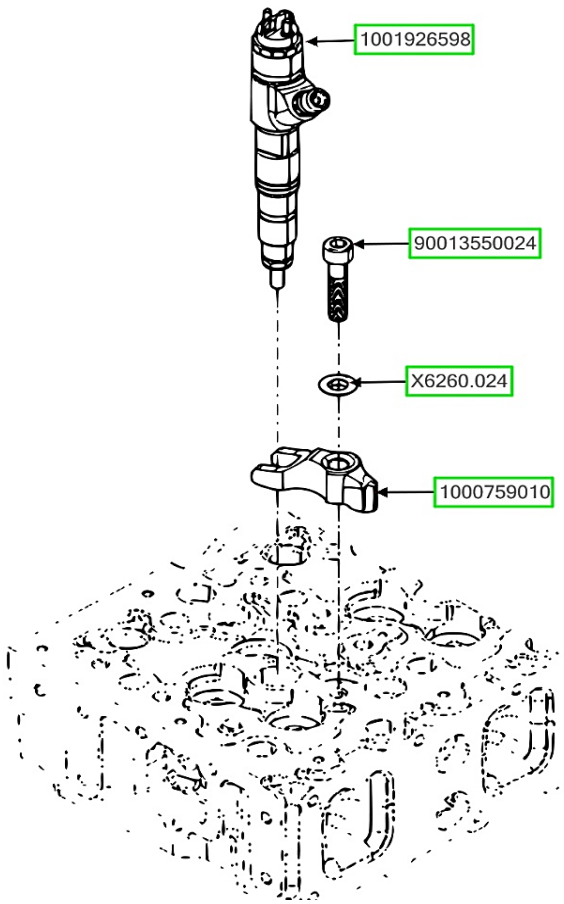

ASSB_NAME	PART NO.	NAME	QTY
FUEL INJECTOR GROUP	1001926598	FUEL INJECTOR	1
	90013550024	INNER HEXAGON SOCKET HEAD CAP SCREW	1
	X6260.024	WASHER WITH BALL FACE	1
	1000759010	FUEL INJECTOR CLAMP	1

ASSB_NAME	PART NO.	NAME	QTY
FUEL INJECTOR GROUP			

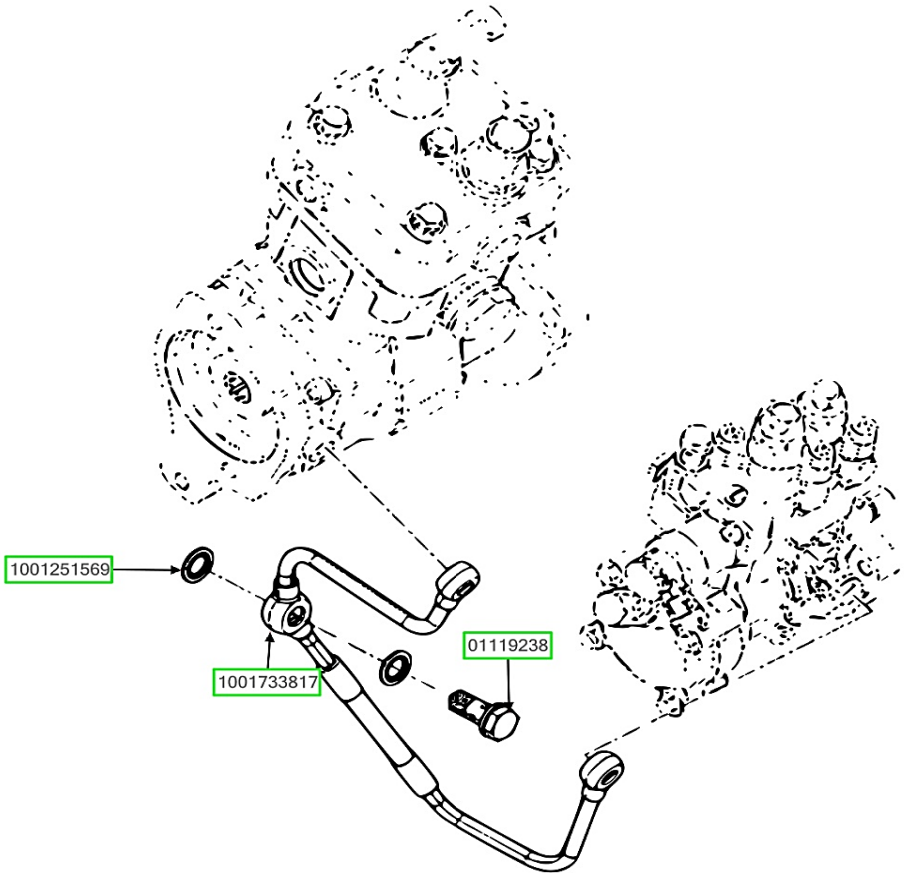

ASSB_NAME	PART NO.	NAME	QTY
FUEL INJECTION PUMP OIL PIPE GROUP	1001251569	ASSEMBLED SEALING WASHER	2
	1001733817	FUEL INJECTION PUMP OIL PIPE ASSEMBLY	1
	01119238	HOLLOW SCREW	1

ASSB_NAME	PART NO.	NAME	QTY
FUEL INJECTION PUMP OIL PIPE GROUP			

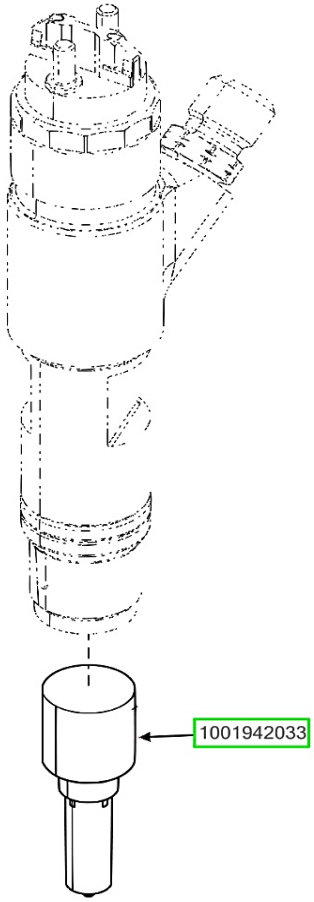

ASSB_NAME	PART NO.	NAME	QTY
REAR FLAP ASSY	1001942033	NOZZLE	1

ASSB_NAME	PART NO.	NAME	QTY

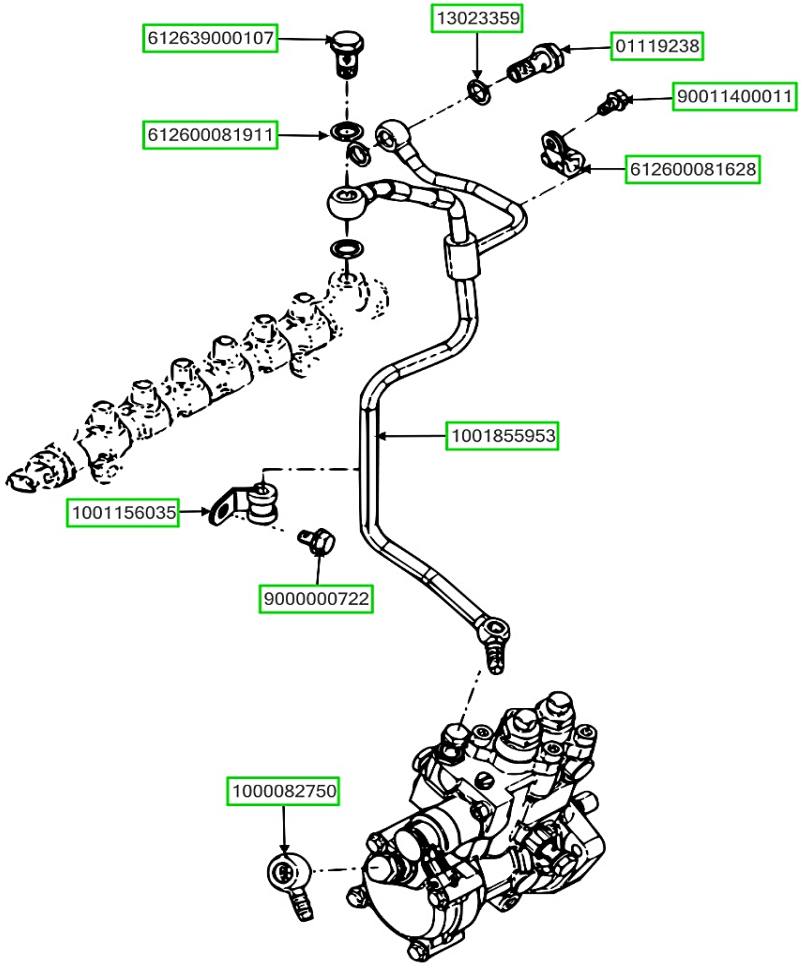

ASSB_NAME	PART NO.	NAME	QTY
LOW PRESSURE FUEL PIPE GROUP	612639000107	BOLT	1
	612600081911	WASHER	2
	13023359	ASSEMBLED SEALING WASHER	2
	01119238	HOLLOW SCREW	1
	90011400011	HEXAGON FLANGE BOLT	1
	612600081628	PIPE CLAMP ASSEMBLY	1
	1001855953	FUEL RETURN PIPE ASSEMBLY	1

ASSB_NAME	PART NO.	NAME	QTY
LOW PRESSURE FUEL PIPE GROUP	1000082750	PIPE JOINT	1
	9000000722	HEXAGON FLANGE BOLT	1
	1001156035	PIPE CLAMP ASSEMBLY	1

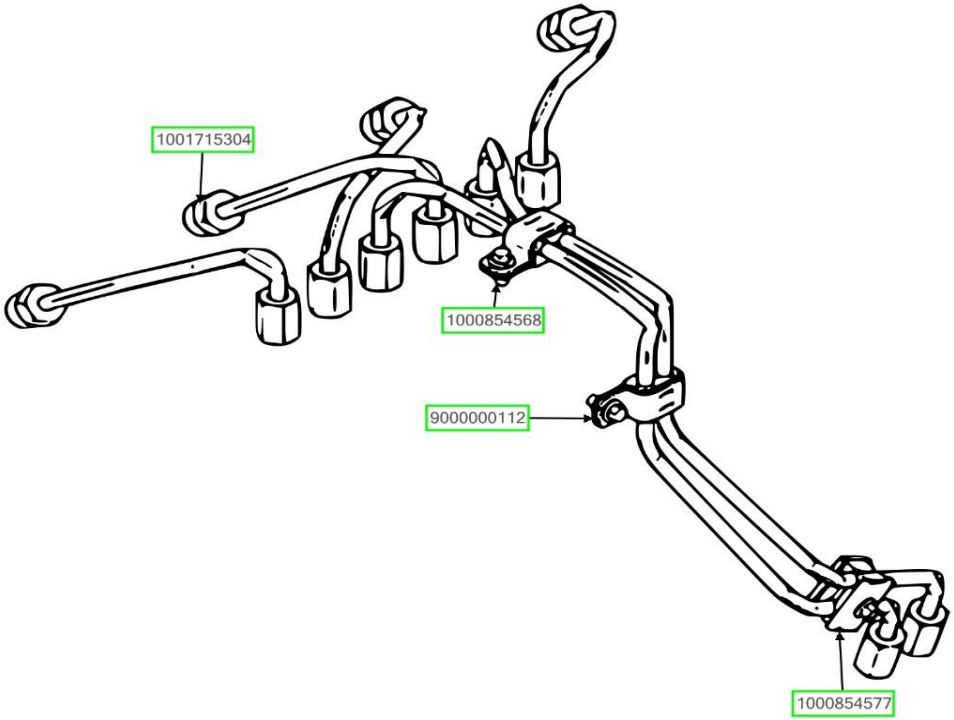

ASSB_NAME	PART NO.	NAME	QTY
HIGH PRESSURE FUEL PIPE ASSEMBLY	1001715304	HIGH-PRESSURE FUEL PIPE ASSEMBLY	1
	1000854568	PIPE CLAMP ASSEMBLY	2
	9000000112	HEXAGON FLANGE BOLT	2
	1000854577	PIPE CLAMP ASSEMBLY	1

ASSB_NAME	PART NO.	NAME	QTY
HIGH PRESSURE FUEL PIPE ASSEMBLY			

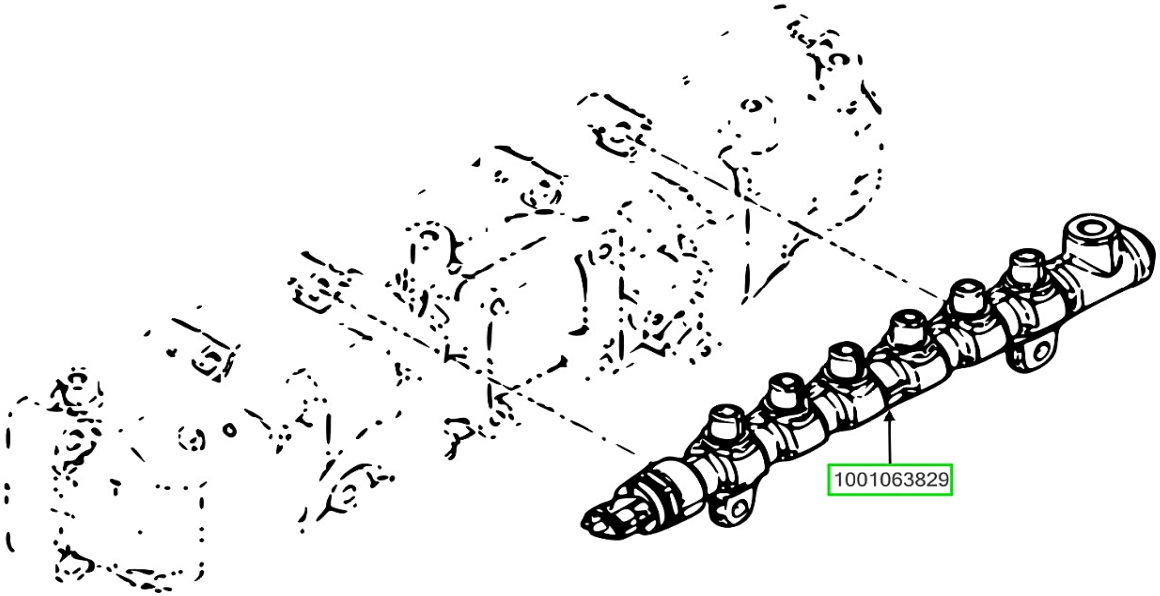

ASSB_NAME	PART NO.	NAME	QTY
COMMON RAIL GROUP	1001063829	RAIL	2

ASSB_NAME	PART NO.	NAME	QTY
COMMON RAIL GROUP			

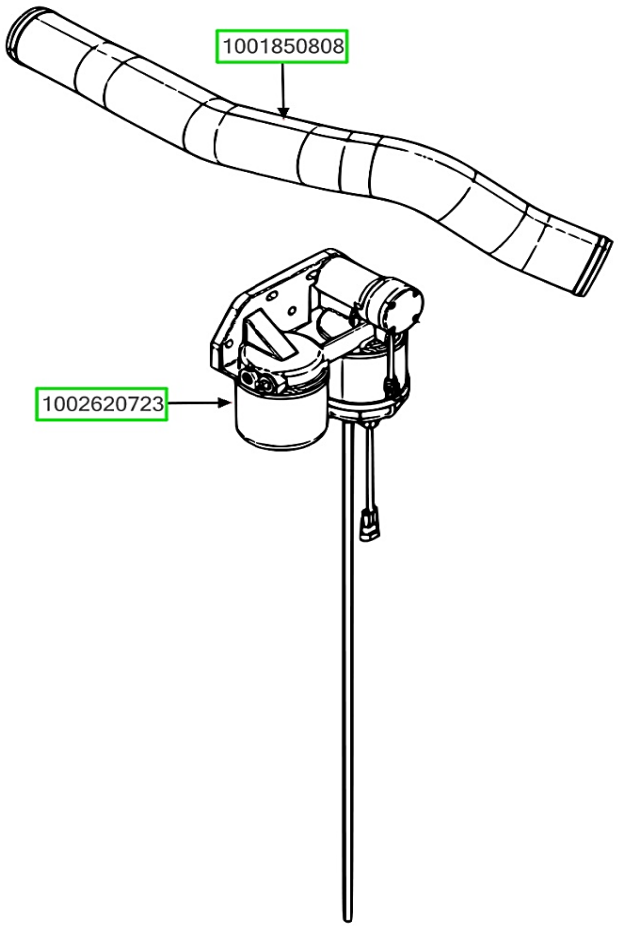

ASSB_NAME	PART NO.	NAME	QTY
PACKING BOX CHASSIS PARTS GROUP	1001850808	INTERCOOL PIPE	1
	1002620723	FUEL SYSTEM PROTECTOR	1

ASSB_NAME	PART NO.	NAME	QTY
PACKING BOX CHASSIS PARTS GROUP			

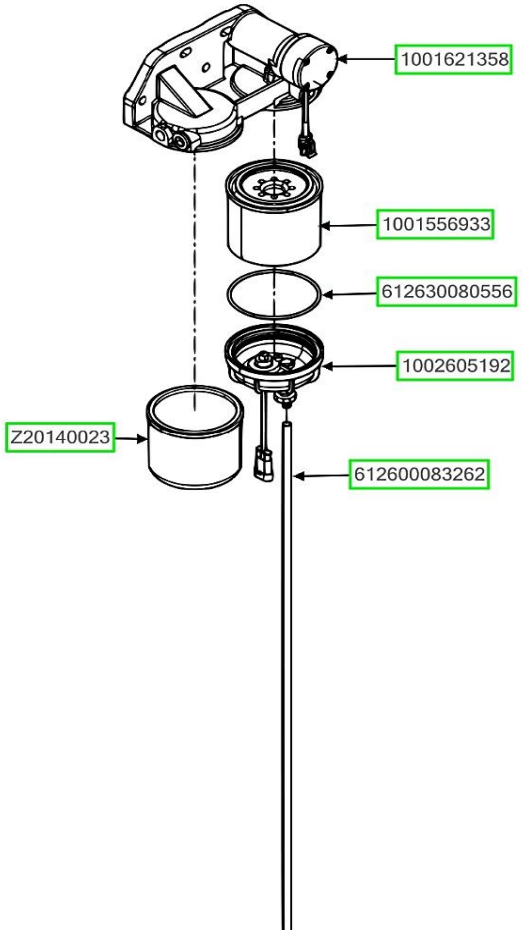

CODE_ASSB	PART NO.	NAME	QTY
FUEL SYSTEM PROTECTOR	1001621358	ELECTRICAL FUEL SUPPLY PUMP ASSEMBLY	1
	1001556933	FUEL COARSE FILTER ELEMENT	1
	612630080556	SEAL RING	1
	1002605192	WATER CUP ASSEMBLY	1
	612600083262	COOLANT CONNECTING RUBBER PIPE	1
	Z20140023	FUEL FINE FILTER	1

CODE_ASSB	PART NO.	NAME	QTY
FUEL SYSTEM PROTECTOR			

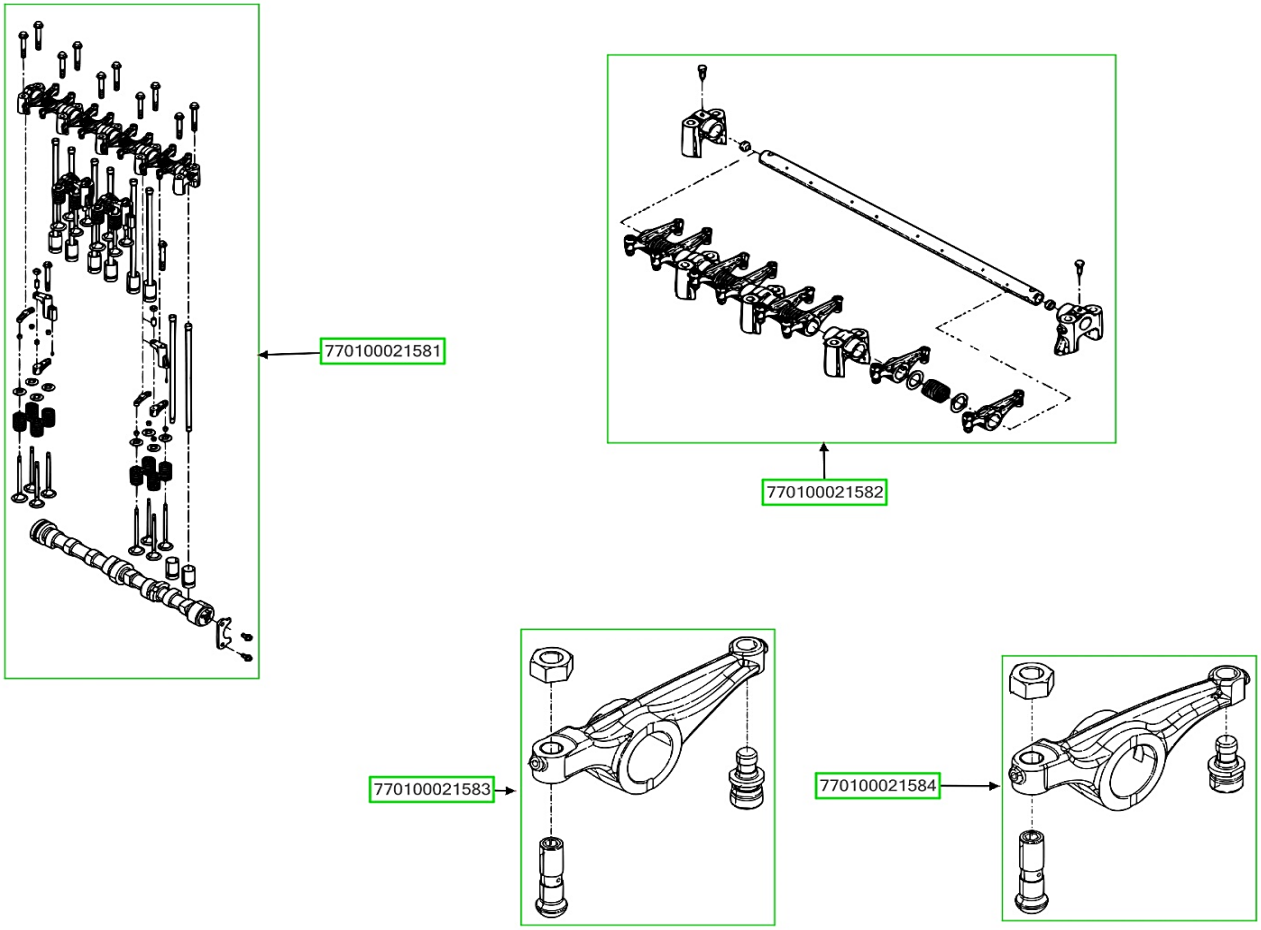

ASSB_NAME	PART NO.	NAME	QTY
VALVE SYSTEM	770100021581	VALVETRAIN GROUP	1
	770100021582	INTEGRATED ROCKER ARM SHAFT ASSEMBLY	1
	770100021583	INTAKE ROCKER ARM SET	1
	770100021584	EXHAUST ROCKER ARM SET	1

ASSB_NAME	PART NO.	NAME	QTY
VALVE SYSTEM			

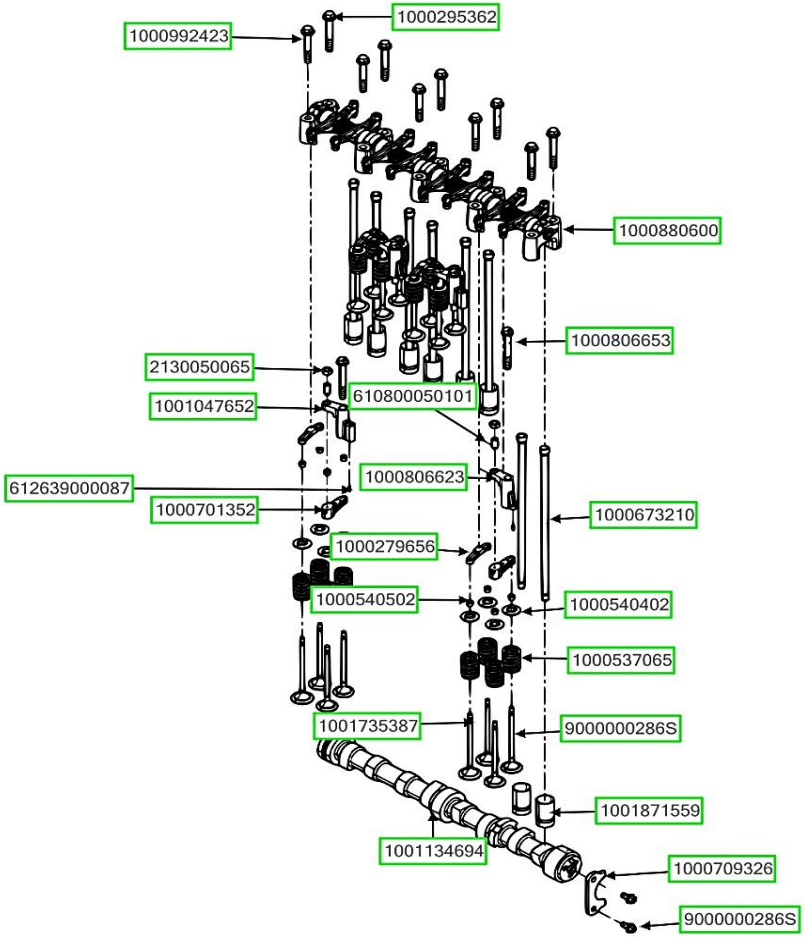

ASSB_NAME	PART NO.	NAME	QTY
VALVE TRAIN GROUP	1000295362	HEXAGON FLANGE BOLT	5
	1000992423	HEXAGON FLANGE BOLT	5
	1000880600	INTEGRATED ROCKER ANN SHAFT ASSEMBLY	1
	1000806653	HEXAGON FLANGE BOLT	4
	1000673210	PUSH ROD	8
	1001130471	TAPPET	8
	1001134694	CAMSHAFT ASSEMBLY	1

ASSB_NAME	PART NO.	NAME	QTY
VALVE TRAIN GROUP	1000709326	CAMSHAFT THRUST PLATE	1
	9000000286S	HEXAGON FLANGE BOLT	2
	1001871559	EXHAUST VALVE	8
	1001735387	INTAKE VALVE	8
	1000537065	VALVE SPRING	16
	1000540402	VALVE SPRING TOP RETAINER	16
	1000540502	VALVE COLLET	32

ASSB_NAME	PART NO.	NAME	QTY
VALVE TRAIN GROUP	1000279656	VALVE BRIDGE	4
	1000806623	EVB BRACKET	2
	610800050101	ADJUSTING SCREW	4
	1000701352	EVB VALVE BRIDGE ASSEMBLY	4
	612639000087	PARALLEL PIN	4
	1001047652	EVB BRACKET	2
	2130050065	LOCKNUT	4

ASSB_NAME	PART NO.	NAME	QTY
VALVE TRAIN GROUP			

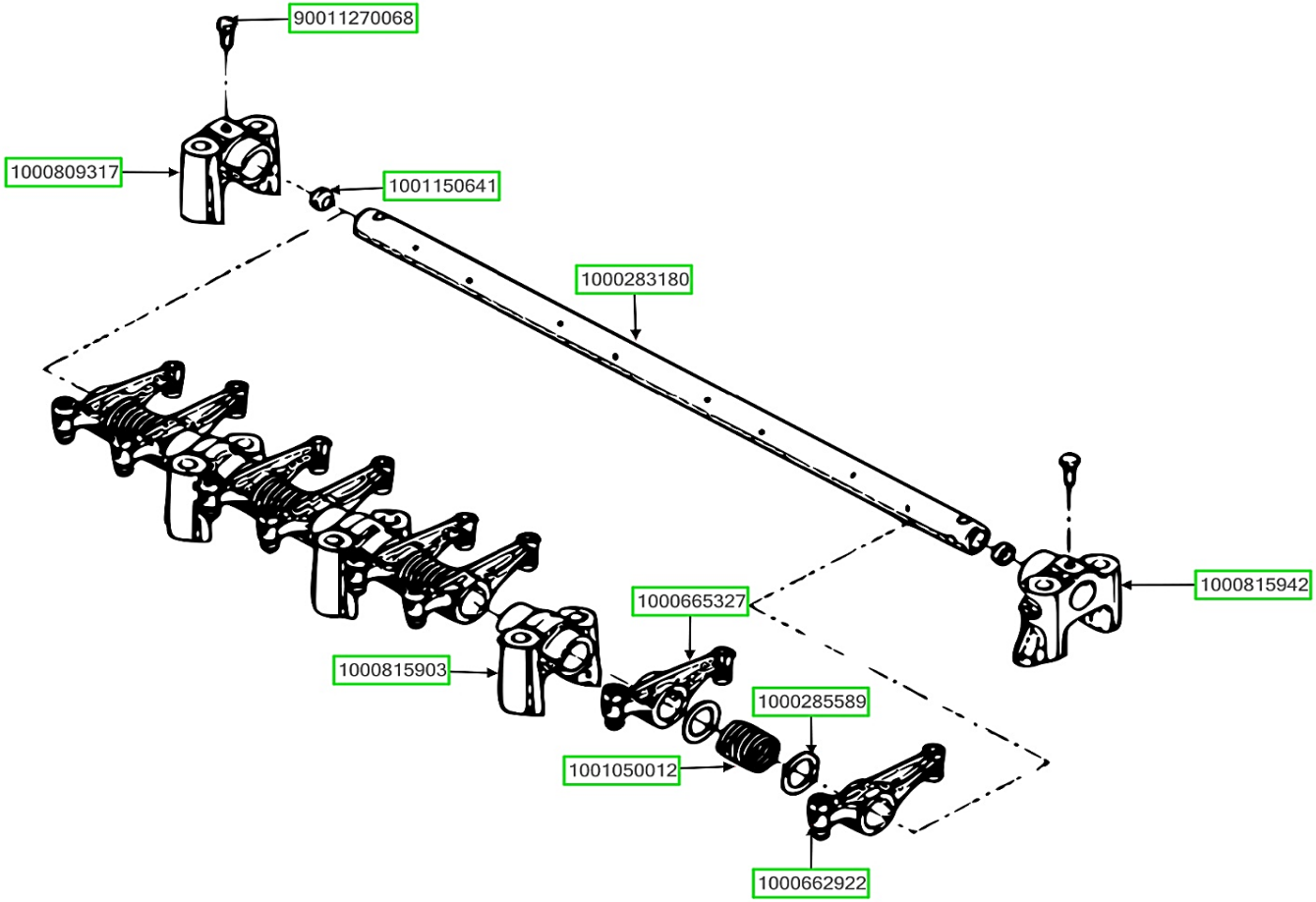

ASSB_NAME	PART NO.	NAME	QTY
INTEGRATED ROCKER ARM SHAFT ASSEMBLY	90011270068	HEXAGON HEAD BOLT	2
	1000809317	ROCKER ANN BRACKET	1
	1001150641	BOWL PLUG	2
	1000283180	ROCKER ANN SHAFT	1
	1000815942	ROCKER ANN BRACKET ASSEMBLY	1
	1000662922	INTAKE ROCKER ANN SET	4
	1000285589	WASHER	8

ASSB_NAME	PART NO.	NAME	QTY
INTEGRATED ROCKER ARM SHAFT ASSEMBLY	1001050012	ROCKER ANN SPRING	4
	1000665327	EXHAUST ROCKER ANN SET	4
	1000815903	MIDDLE ROCKER ANN BRACKET	3

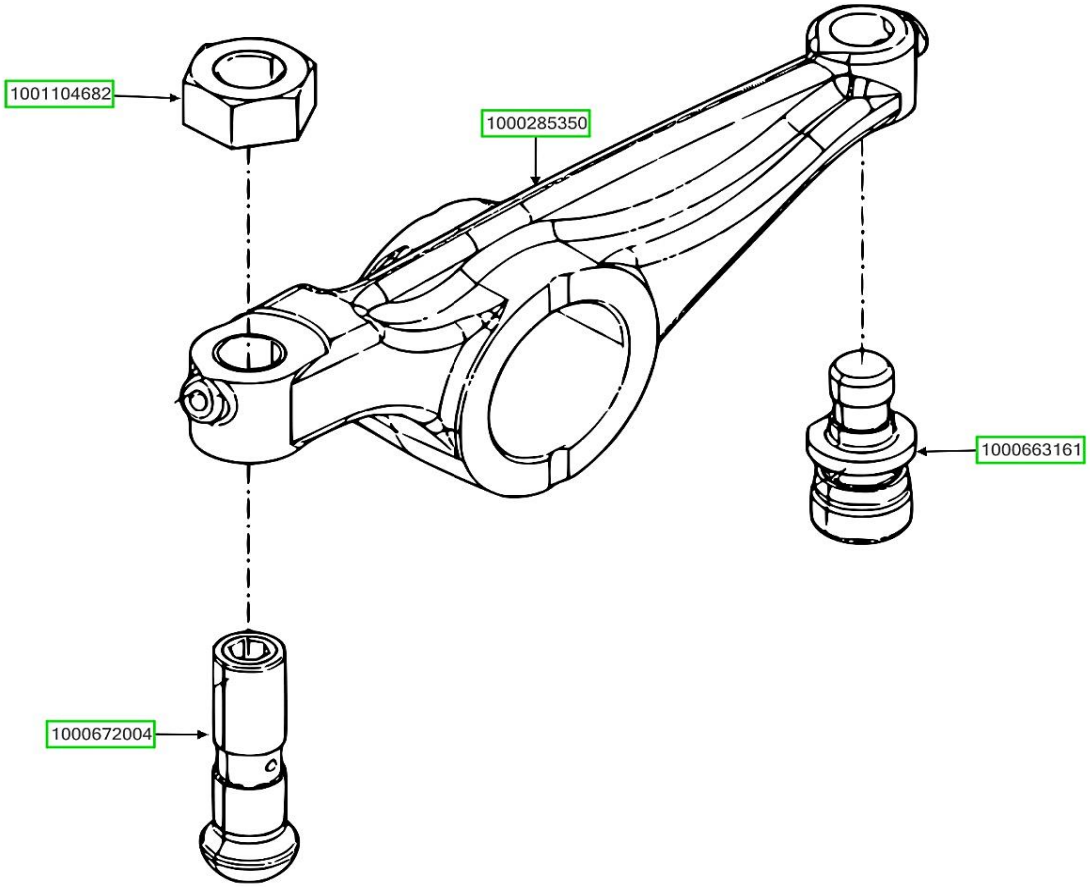

ASSB_NAME	PART NO.	NAME	QTY
INTAKE ROCKER ARM SET	1001104682	ADJUSTING NUT	1
	1000285350	INTAKE ROCKER ARM	1
	1000672004	ADJUSTING SCREW	1
	1000663161	BALL PIN SET	1

ASSB_NAME	PART NO.	NAME	QTY
INTAKE ROCKER ARM SET			

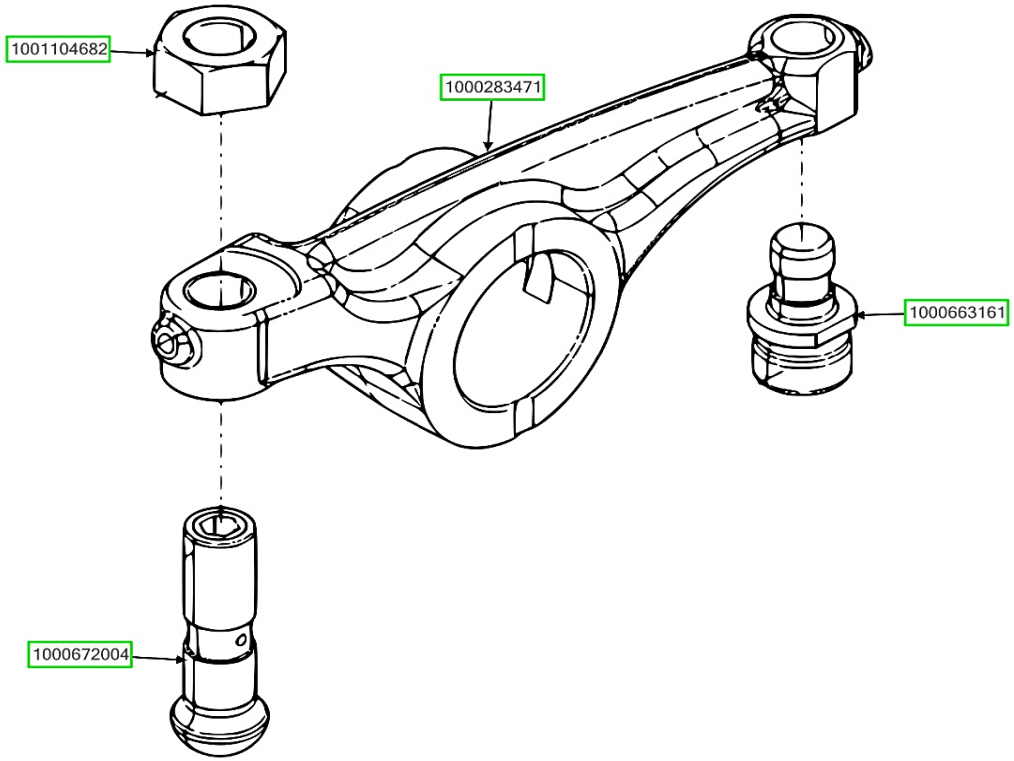

ASSB_NAME	PART NO.	NAME	QTY
EXHAUST ROCKER ARM SET	1001104682	ADJUSTING NUT	1
	1000283471	EXLIAUST ROCKER ANN	1
	1000672004	ADJUSTING SCREW	1
	1000663161	BALL PIN SET	1

ASSB_NAME	PART NO.	NAME	QTY
EXHAUST ROCKER ARM SET			

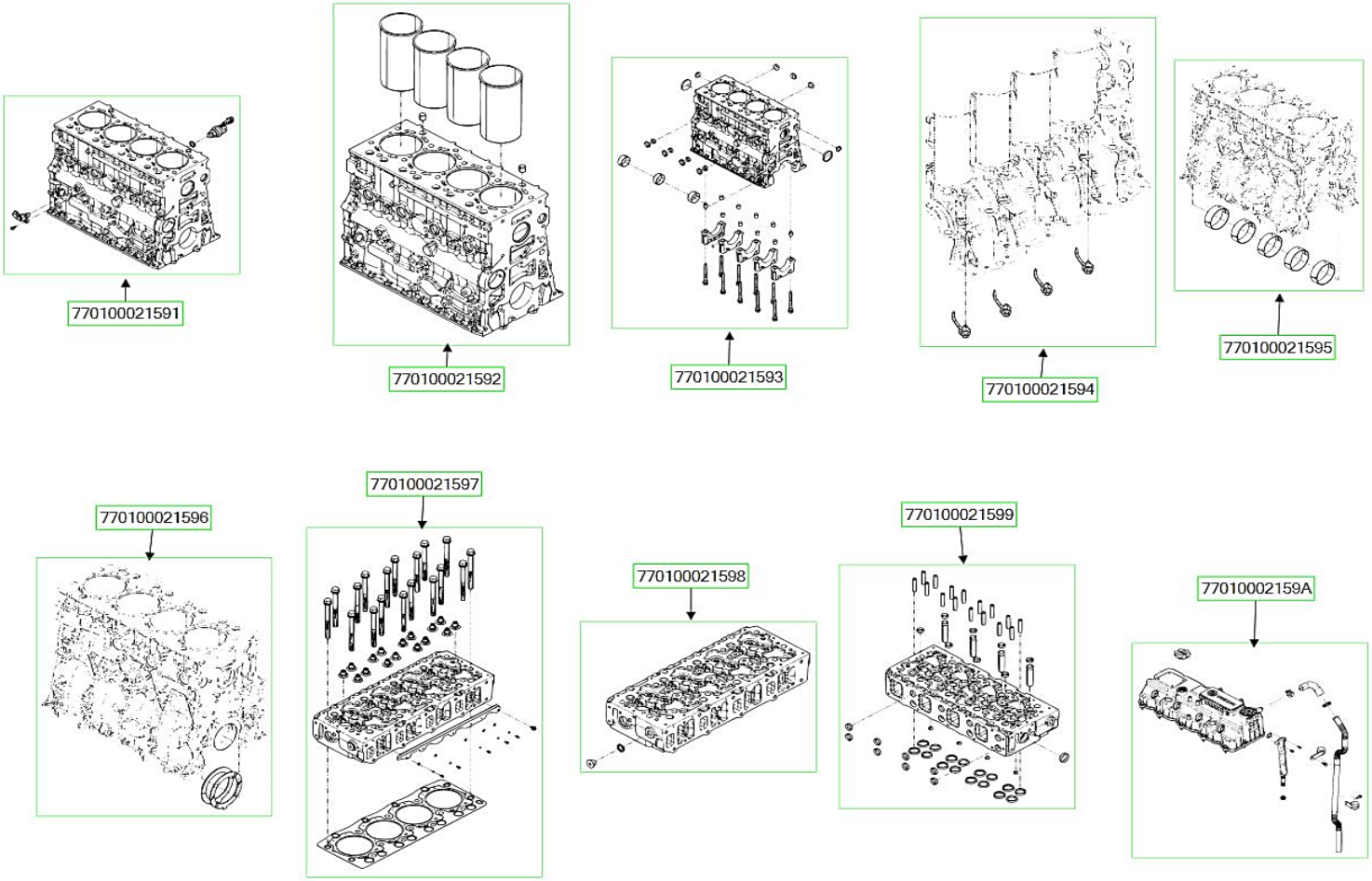

ASSB_NAME	PART NO.	NAME	QTY
ENGINE CYLINDER	770100021591	ENGINE BLOCK GROUP	1
	770100021592	CRANKCASE ASSEMBLY	1
	770100021593	CRANKCASE PRE-ASSEMBLY	1
	770100021594	SPRAY NOZZLE GROUP	1
	770100021595	MAIN BEARING GROUP	1
	770100021596	THRUST PLATE GROUP	1
	770100021597	CYLINDER HEAD GROUP	1

ASSB_NAME	PART NO.	NAME	QTY
ENGINE CYLINDER	770100021598	CYLINDER HEAD ASSEMBLY	1
	770100021599	CYLINDER HEAD SUBASSEMBLY	1
	77010002159A	CYLINDER HEAD COVER GROUP	1

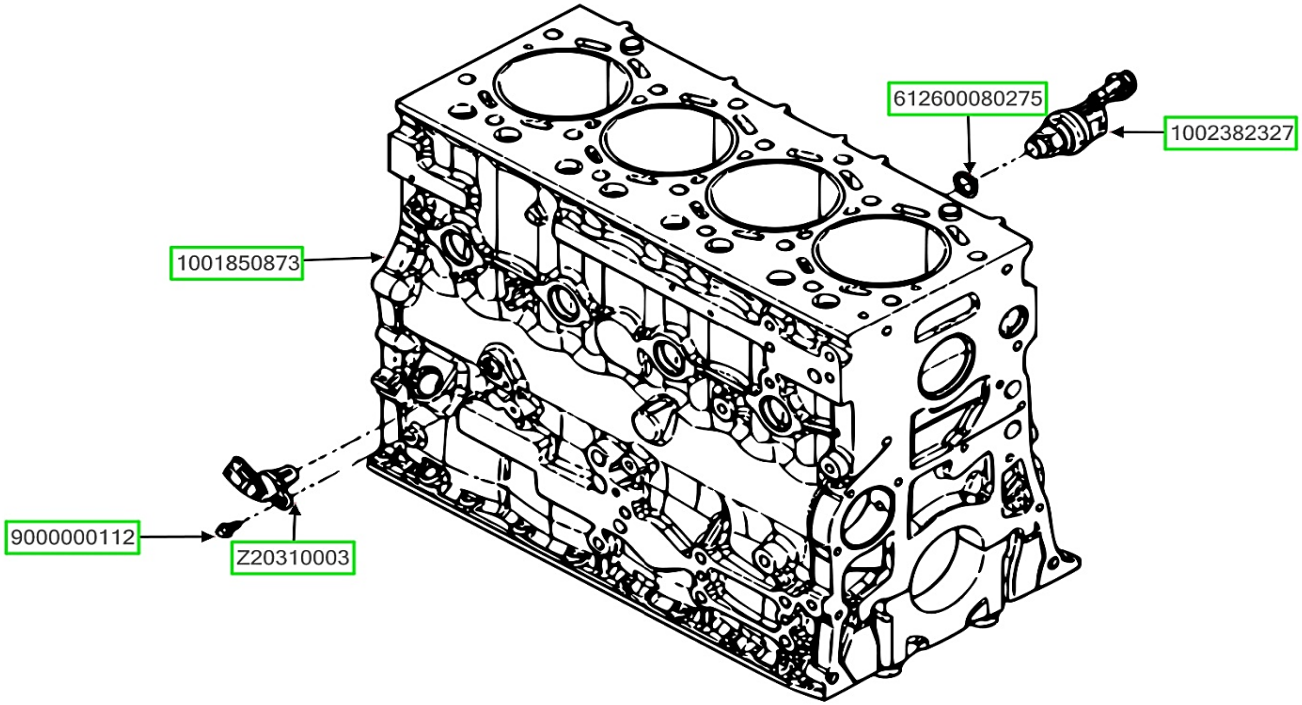

ASSB_NAME	PART NO.	NAME	QTY
ENGINE BLOCK GROUP	CMS30080	FLAP HINGE (LH,RH)	2
	CMS30011	LOCK	4
	660100011	LOCK ASSY	1
	5408500-001L5	LIFTER ASSY	1
	3Y0601011	WEATHERSTRIP	1
	3Y0101011	LH GRID FLAP CAP	1

ASSB_NAME	PART NO.	NAME	QTY
ENGINE BLOCK GROUP			

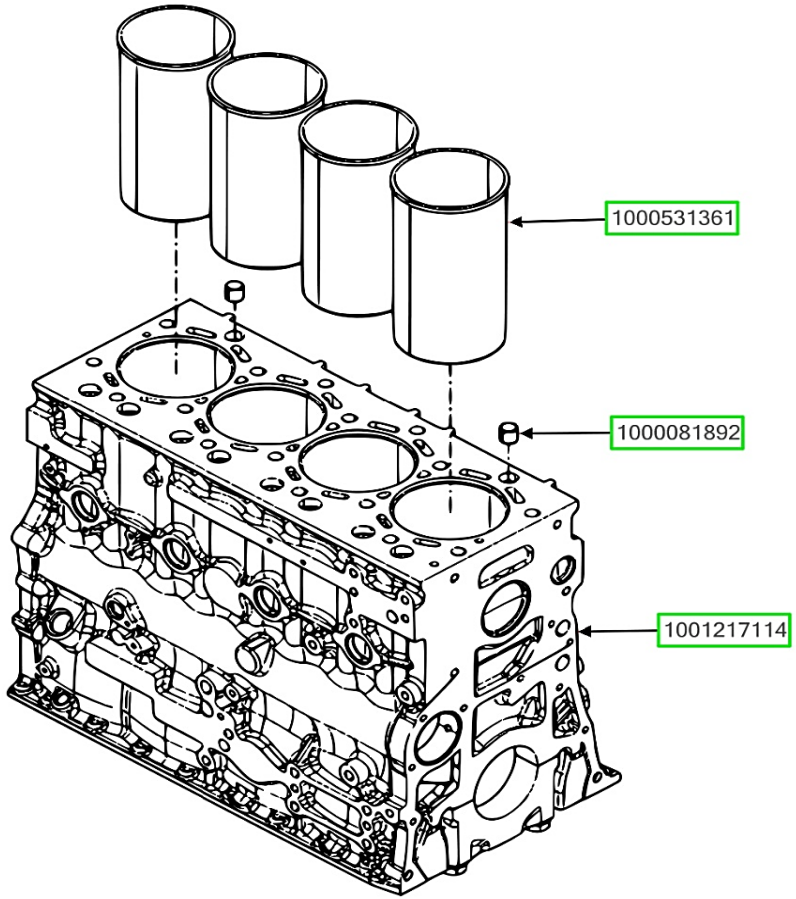

ASSB_NAME	PART NO.	NAME	QTY
CRANKCASE ASSEMBLY	1000531361	CYLINDER LINER	4
	1000081892	DOWEL PIN	2
	1001217114	CRANKCASE PRE-ASSEMBLY	1

ASSB_NAME	PART NO.	NAME	QTY
CRANKCASE ASSEMBLY			

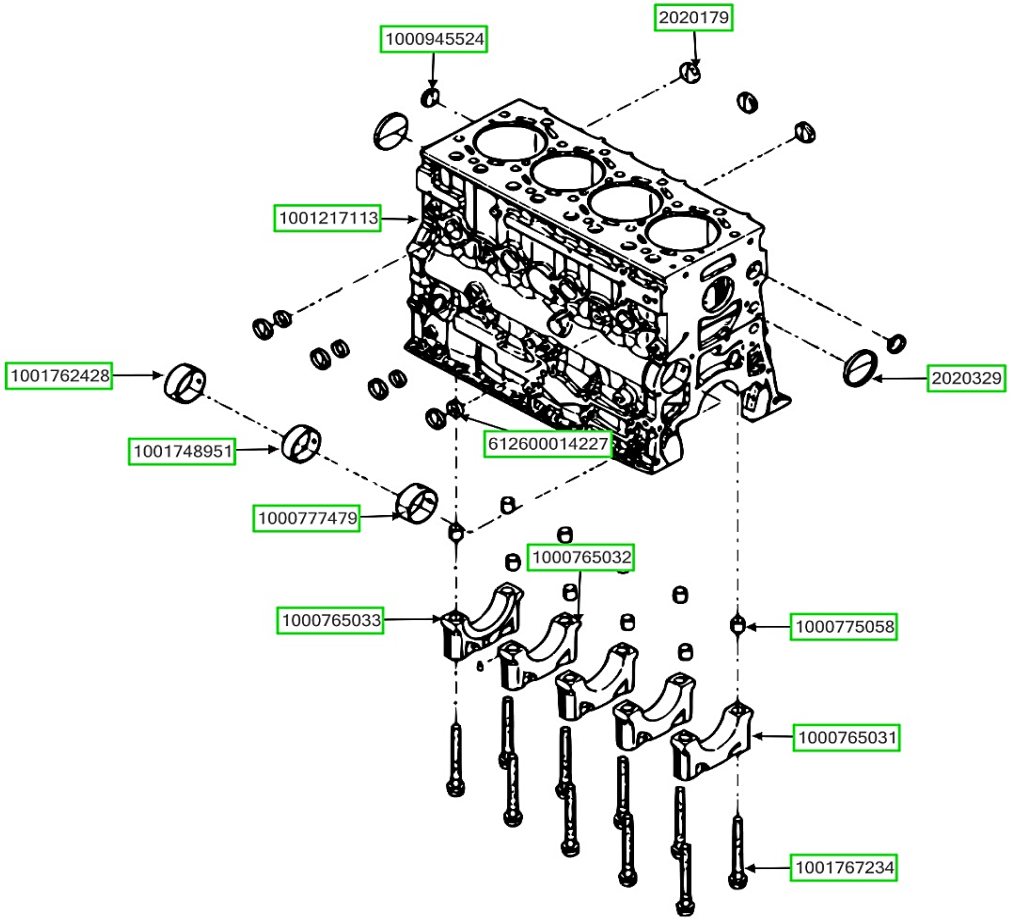

ASSB_NAME	PART NO.	NAME	QTY
CRANKCASE PRE-ASSEMBLY	1000945524	BOWL PLUG	2
	1001217113	ENGINE BLOCK	1
	2020179	JAM	7
	2020329	JAM	2
	1000775058	DOWEL PIN	10
	1000765031	MAIN BEARING CAP	1
	1001767234	MAIN BEARING BOLT	10

ASSB_NAME	PART NO.	NAME	QTY
CRANKCASE PRE-ASSEMBLY	1000765032	MAIN BEARING CAP	3
	1000765033	THRUST BEARING COVER	1
	1000777479	CAMSHAFT BUSH	1
	1001748951	CAMSHAFT BUSH	1
	1001762428	CAMSHAFT BUSH	1
	612600014227	BOWL PLUG	4

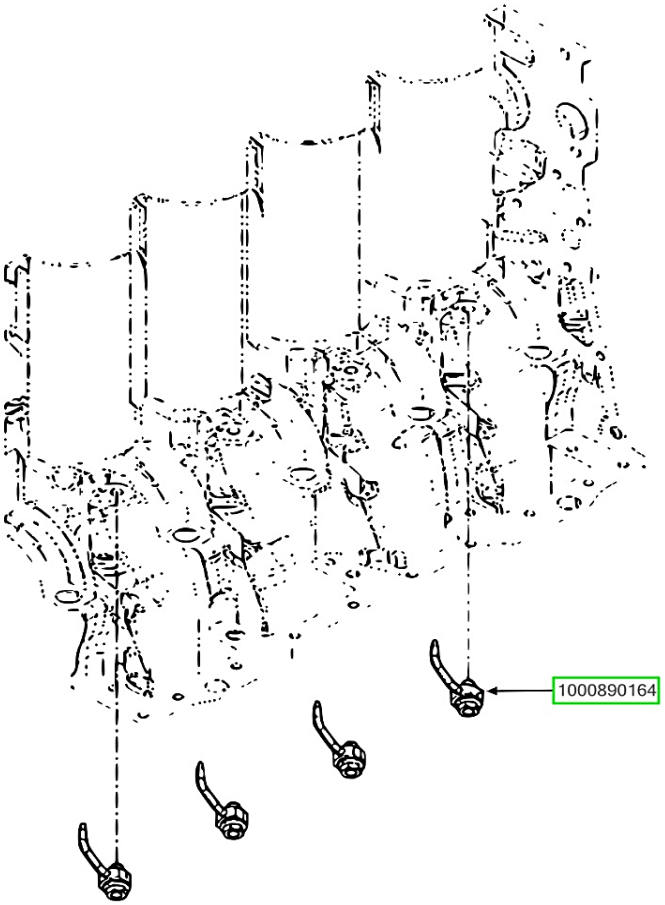

ASSB_NAME	PART NO.	NAME	QTY
SPRAY NOZZLE GROUP	1000890164	PISTON NOZZLE SET	1

ASSB_NAME	PART NO.	NAME	QTY
SPRAY NOZZLE GROUP			

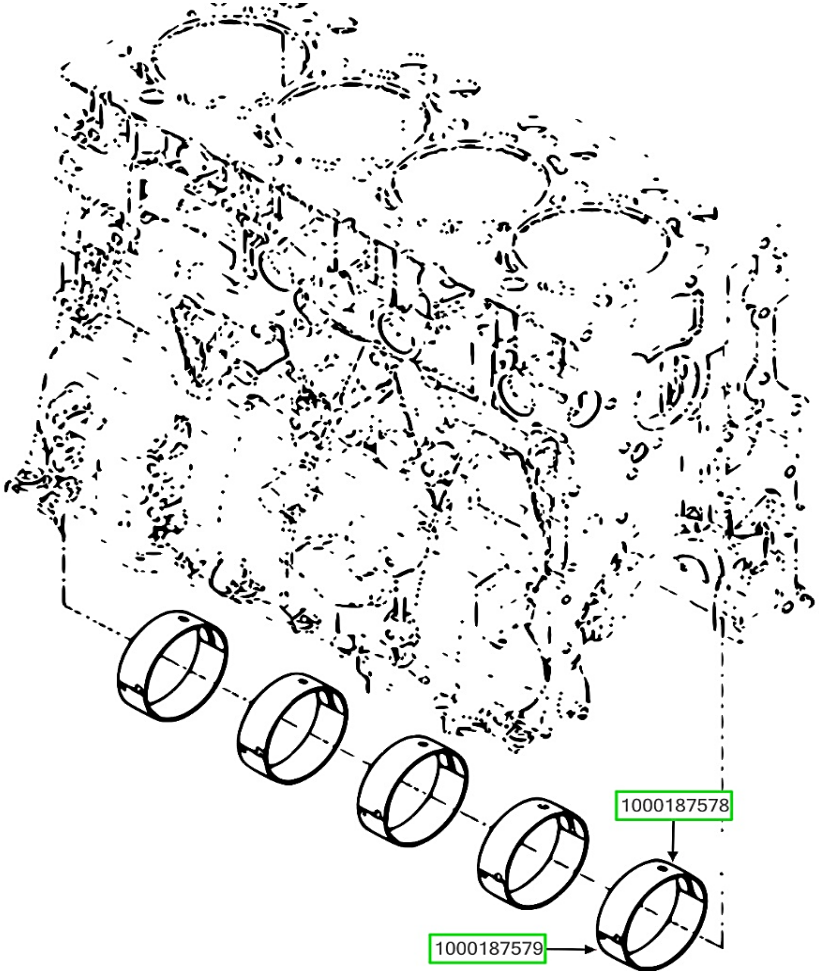

ASSB_NAME	PART NO.	NAME	QTY
MAIN BEARING GROUP	1000187578	MAIN BEARING UPPER SHELL	1
	1000187579	MAIN BEARING LOWER SHELL	1

ASSB_NAME	PART NO.	NAME	QTY
MAIN BEARING GROUP			

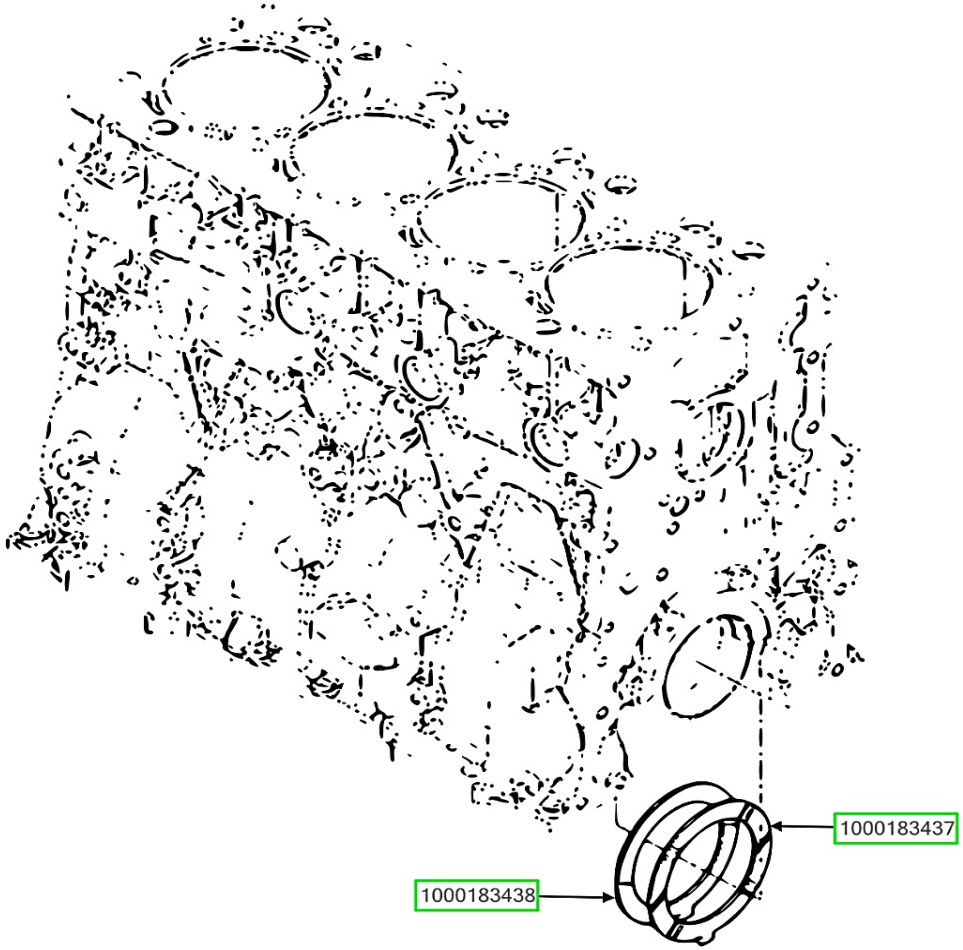

ASSB_NAME	PART NO.	NAME	QTY
THRUST PLATE GROUP	1000183437	UPPER THRUST PLATE	2
	1000183438	LOWER THRUST PLATE	2

ASSB_NAME	PART NO.	NAME	QTY
THRUST PLATE GROUP			

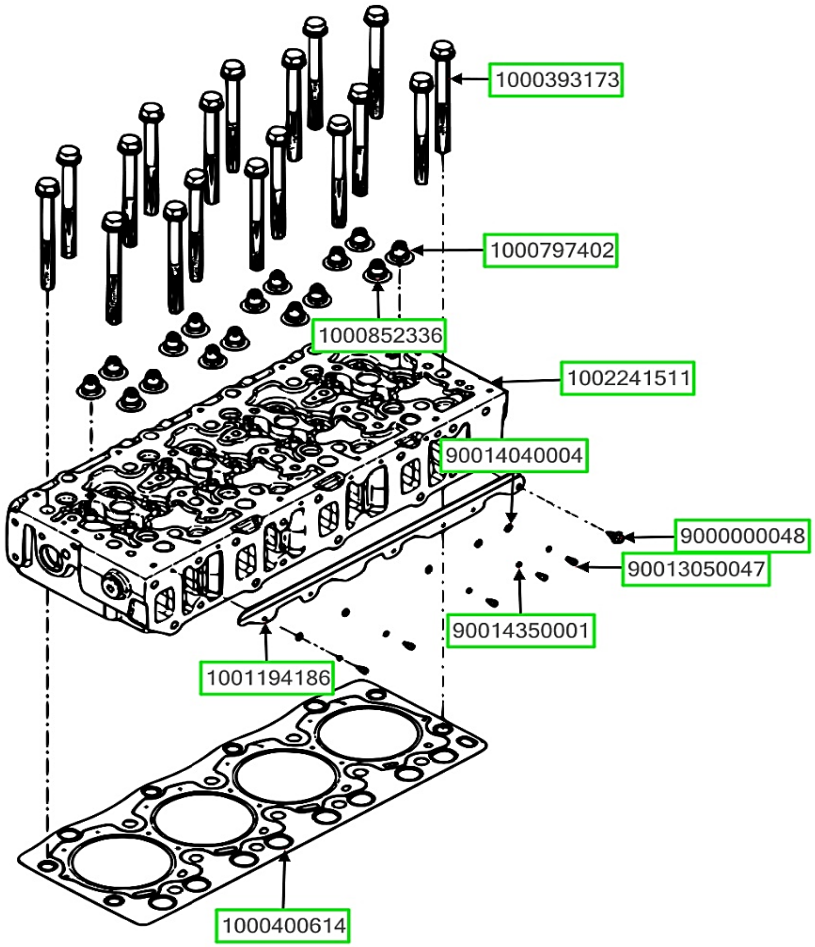

ASSB_NAME	PART NO.	NAME	QTY
CYLINDER HEAD GROUP	1000393173	CYLINDER HEAD BOLT	18
	1000797402	VALVE STEM SEAL	8
	1000852336	VALVE STEM SEAL	8
	1002241511	CYLINDER HEAD ASSEMBLY	1
	1001194186	METAL PLATE FOR HEAT SHIELD	1
	9000000048	HEXAGON FLANGE BOLT	1
	90014040004	PLAIN WASHER	5

ASSB_NAME	PART NO.	NAME	QTY
CYLINDER HEAD GROUP	90014350001	SPRING WASHER	5
	90013050047	INNER HEXAGON SOCKET HEAD CAP SCREW	5
	1000400614	CYLINDER HEAD GASKET	1

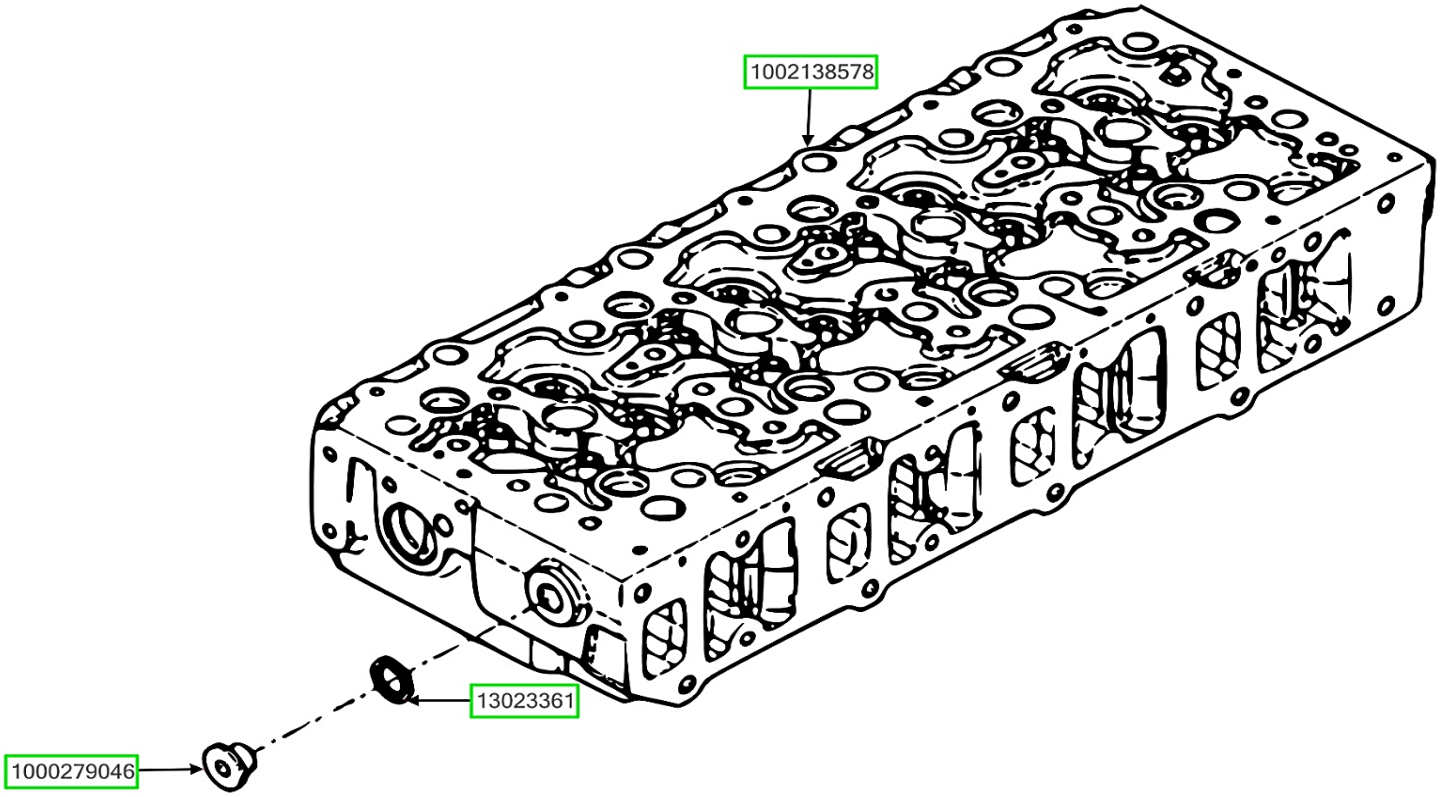

ASSB_NAME	PART NO.	NAME	QTY
CYLINDER HEAD ASSEMBLY	1002138578	CYLINDER HEAD SUBASSEMBLY	1
	13023361	ASSEMBLED SEALING WASHER	1
	1000279046	HEXAGON TAPER SCREW PLUG	1

ASSB_NAME	PART NO.	NAME	QTY
CYLINDER HEAD ASSEMBLY			

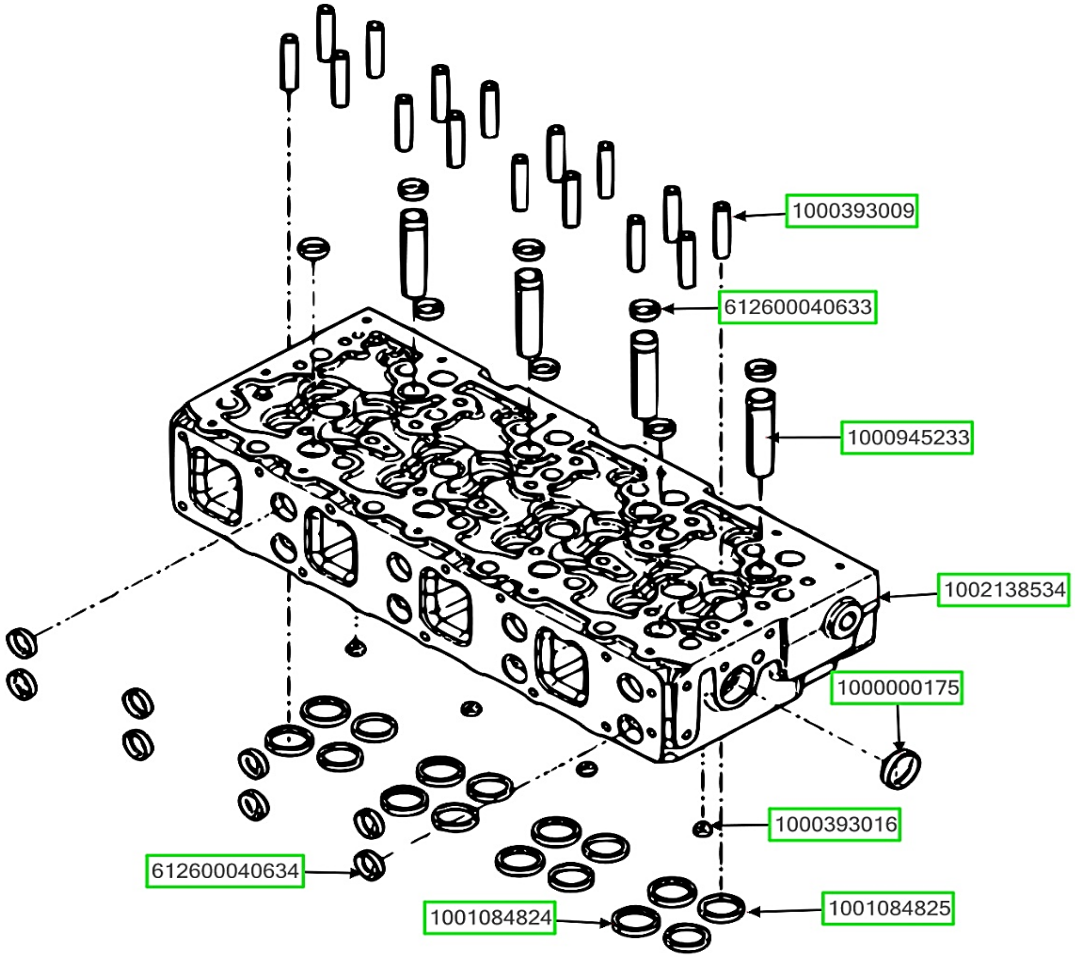

ASSB_NAME	PART NO.	NAME	QTY
CYLINDER HEAD SUBASSEMBLY	1000393009	VALVE GUIDE	16
	612600040633	BOWL PLUG	8
	1000945233	PUSH ROD BUSH	4
	1002138534	CYLINDER HEAD	1
	1000000175	BOWL PLUG	1
	1000393016	BOWL PLUG	4
	1001084824	INTAKE VALVE SEAT	8

ASSB_NAME	PART NO.	NAME	QTY
CYLINDER HEAD SUBASSEMBLY	1001084825		8
	612600040634		8

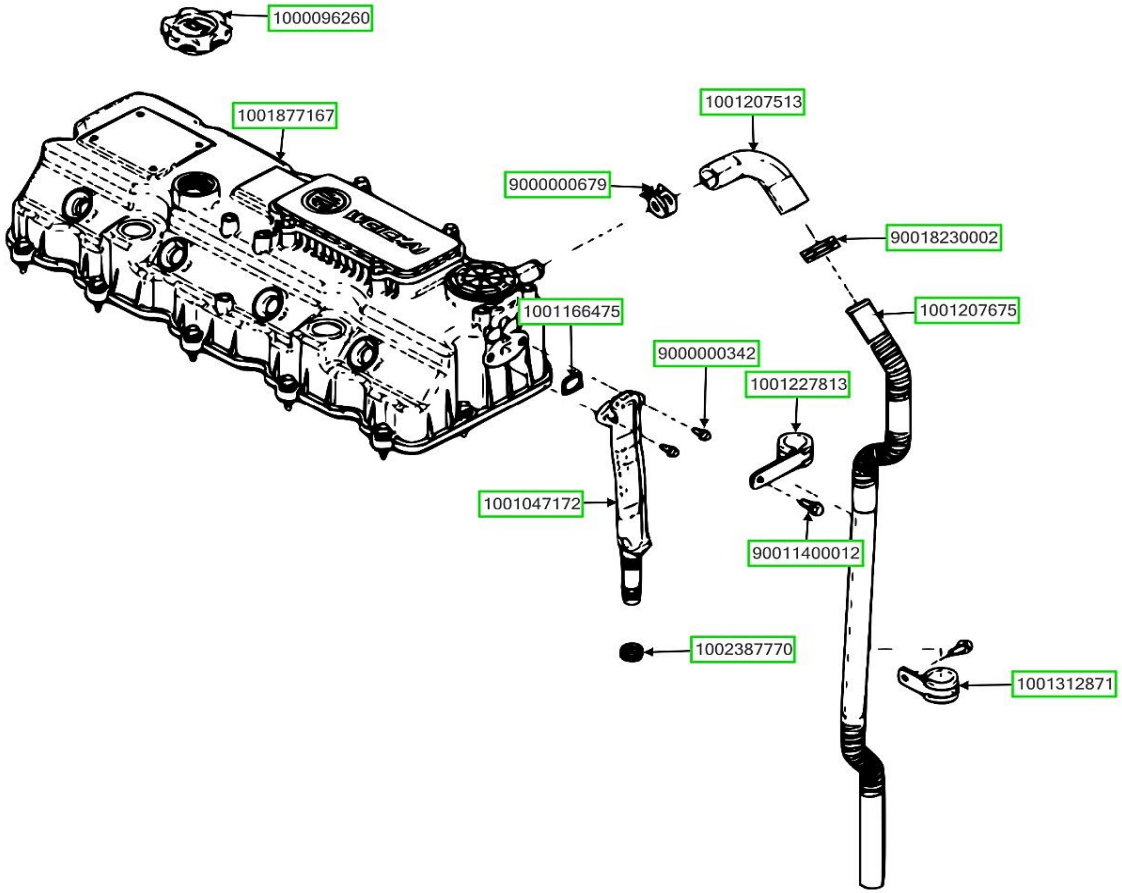

ASSB_NAME	PART NO.	NAME	QTY
STOPPER ASSY	1000096260	OIL CAP	1
	1001877167	CYLINDER HEAD COVER ASSEMBLY	1
	9000000679	HOSES CLAMP	1
	1001207513	AIR CONNECTING RUBBER PIPE	1
	90018230002	HOSES CLAMP	1
	1001207675	OIL-GAS SEPARATOR AIR-OUTLET PIPE	1
	1001312871	PIPE CLAMP ASSEMBLY	1

ASSB_NAME	PART NO.	NAME	QTY
STOPPER ASSY	90011400012	HEXAGON FLANGE BOLT	2
	1001227813	PIPE CLAMP ASSEMBLY	1
	9000000342	HEXAGON FLANGE BOLT	2
	1001047172	OIL-GAS SEPARATOR OIL-RETURN	1
	1001166475	SEAL RING	1
	1002387770	O-RING	2

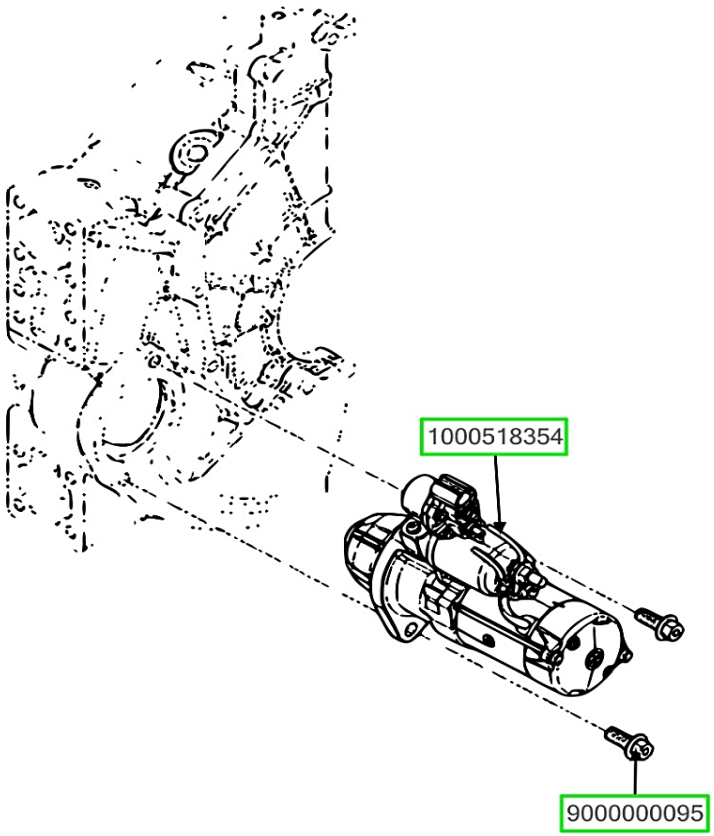

ASSB_NAME	PART NO.	NAME	QTY
STARTER MOTOR GROUP	1000518354	STARTER MOTOR	1
	9000000095	HEXAGON FLANGE BOLT	2

ASSB_NAME	PART NO.	NAME	QTY
STARTER MOTOR GROUP			

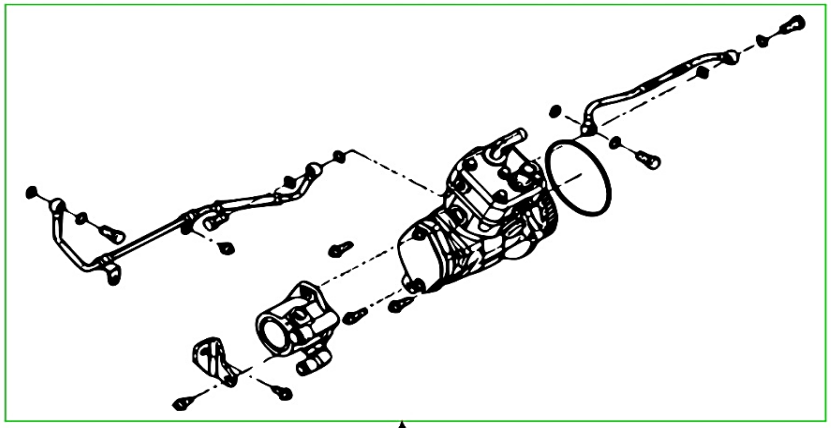

77010002171

77010002172

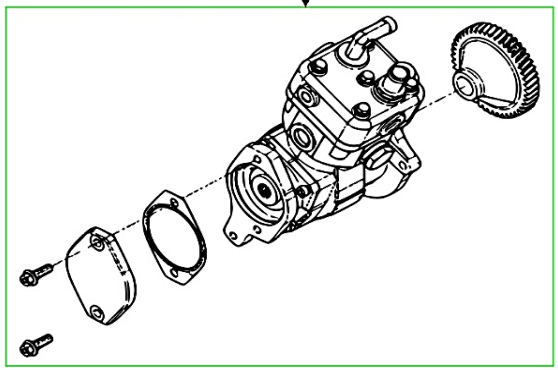

ASSB_NAME	PART NO.	NAME	QTY
AIR COMPRESSOR	77010002171	AIR COMPRESSOR GROUP	1
	77010002172	AIR COMPRESSOR ASSEMBLY	1

ASSB_NAME	PART NO.	NAME	QTY
AIR COMPRESSOR			

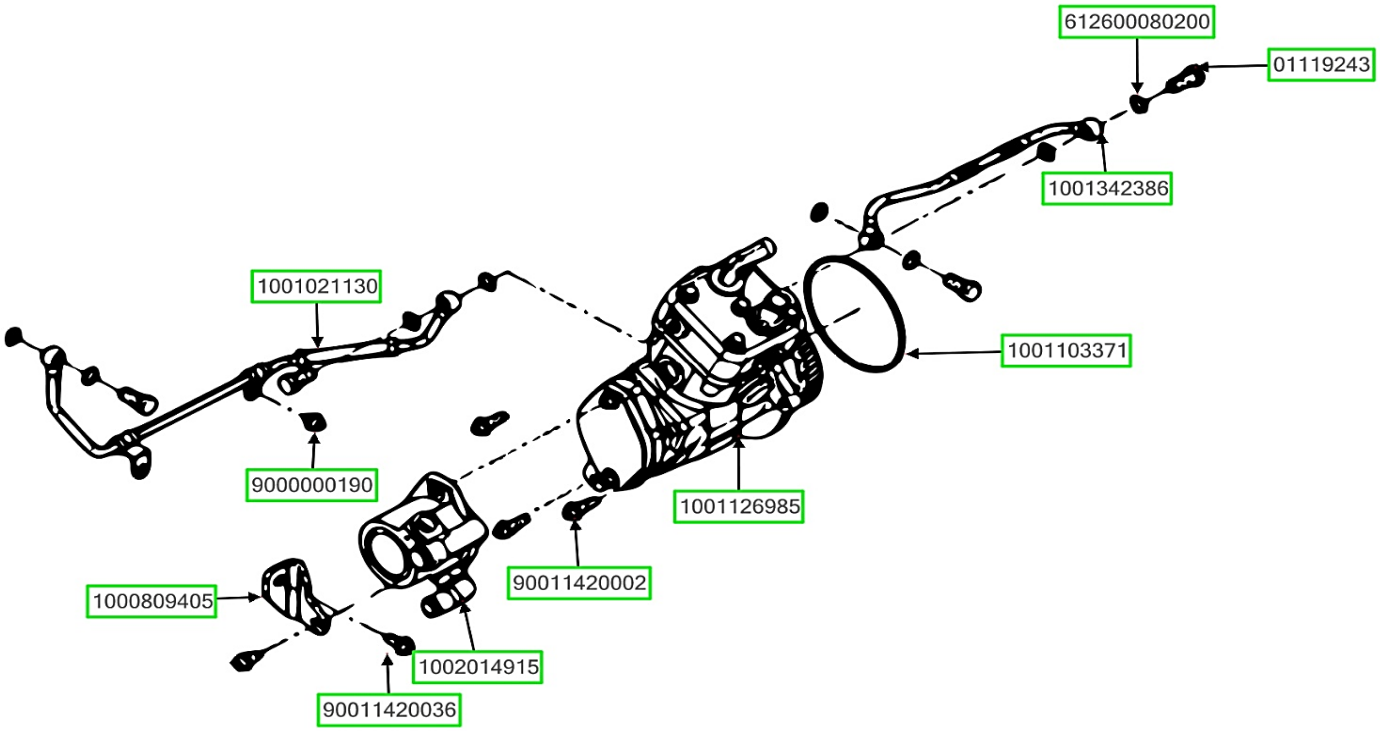

ASSB_NAME	PART NO.	NAME	QTY
AIR COMPRESSOR GROUP	01119243	HOLLOW SCREW	4
	612600080200	WASHER	8
	1001342386	AIR COMPRESSOR WATER PIPE ASSEMBLY	1
	1001103371	O-RING	1
	1001126985	AIR COMPRESSOR ASSEMBLY	1
	90011420002	HEXAGON FLANGE BOLT	3
	1002014915	HYDRAULIC PUMP	1

ASSB_NAME	PART NO.	NAME	QTY
AIR COMPRESSOR GROUP	90011420036	HEXAGON FLANGE BOLT	2
	1000809405	AIR COMPRESSOR BRACKET	1
	1001021130	AIR COMPRESSOR WATER PIPE ASSEMBLY	1
	9000000190	HEXAGON FLANGE BOLT	1

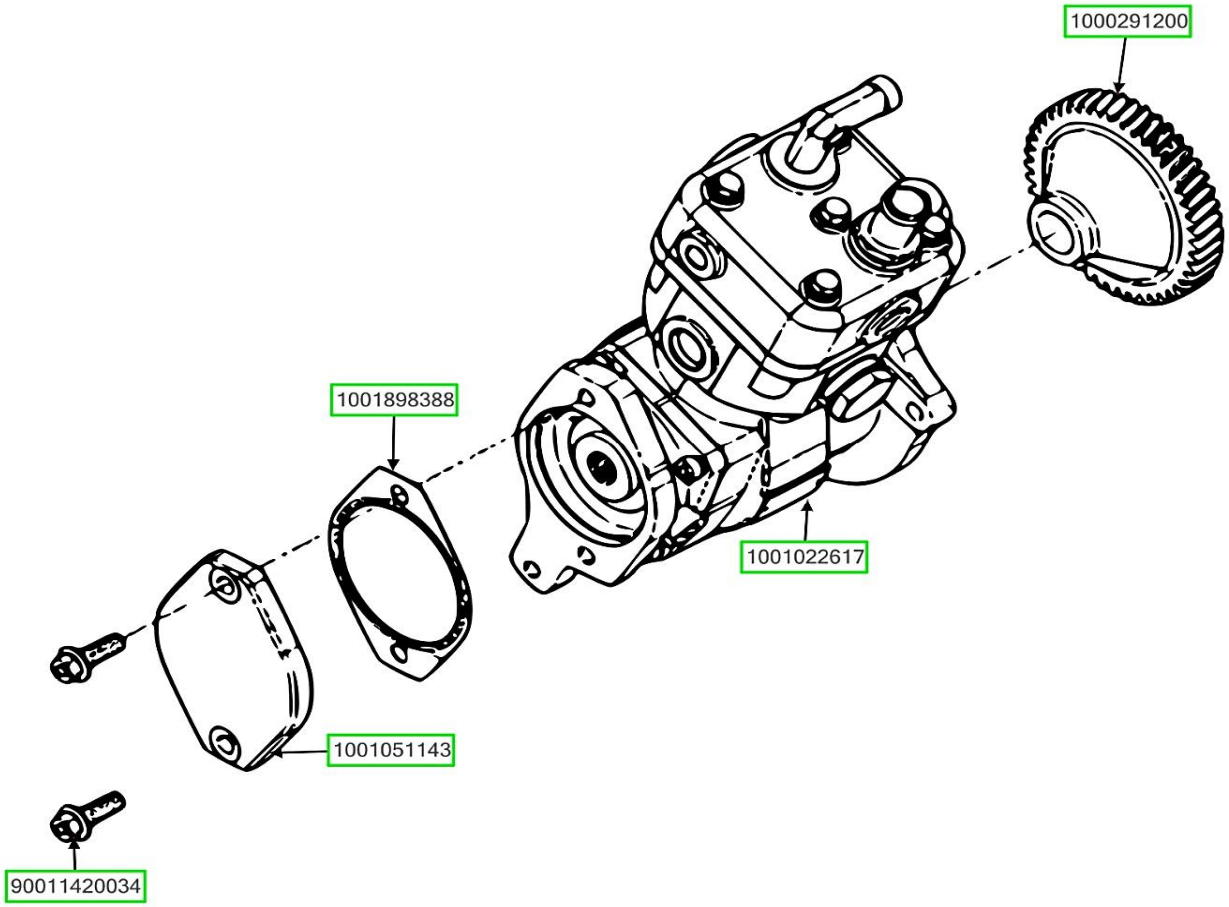

ASSB_NAME	PART NO.	NAME	QTY
AIR COMPRESSOR ASSEMBLY	1000291200	AIR COMPRESSOR GEAR	1
	1001022617	AIR COMPRESSOR	1
	1001898388	GASKET	1
	1001051143	COVER	1
	90011420034	HEXAGON FLANGE BOLT	2

ASSB_NAME	PART NO.	NAME	QTY
AIR COMPRESSOR ASSEMBLY			

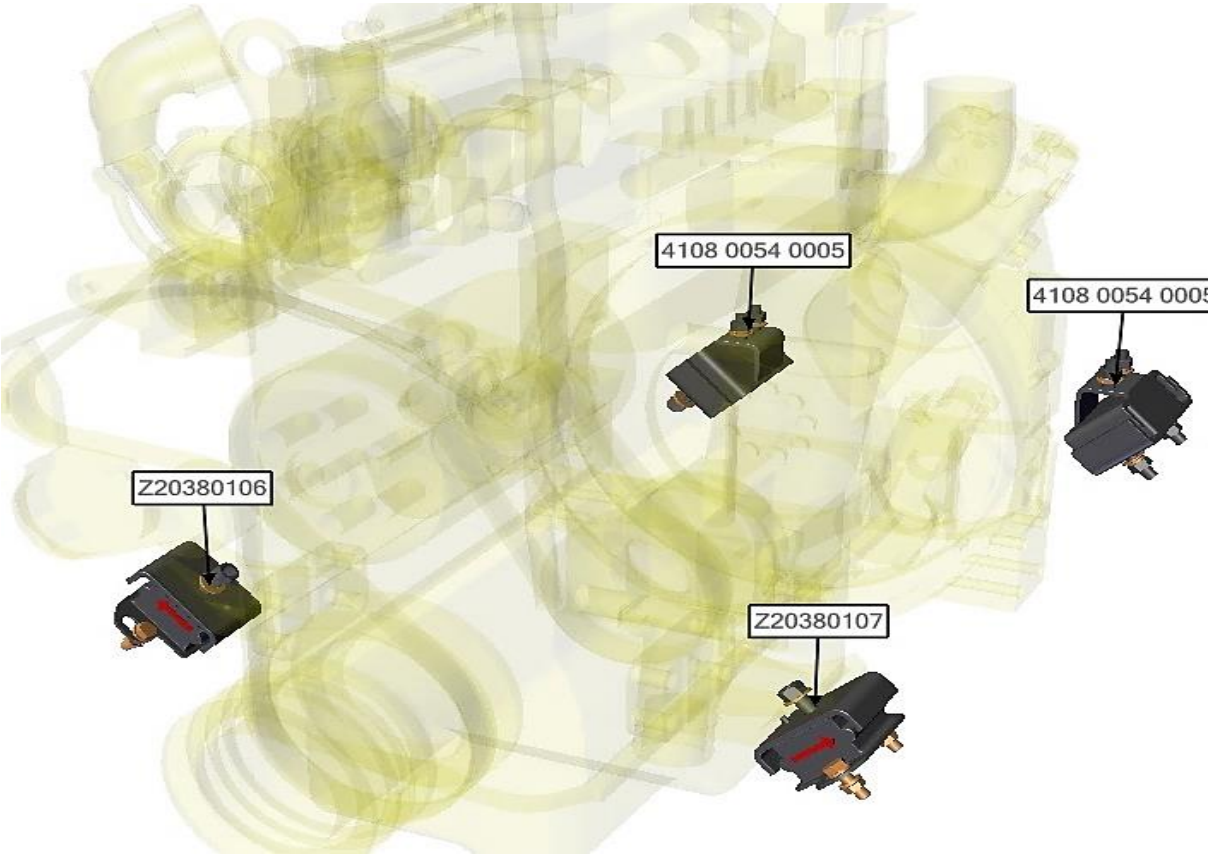

ASSB_NAME	PART NO.	NAME	QTY
MINOR ITEMS	Z20380106	LEFR RUBBER CUSHION	1
	Z20380107	RIGHT RUBBER CUSHION	1
	4108 0054 0005	REAR RUBBER CUSHION	2

ASSB_NAME	PART NO.	NAME	QTY
MINOR ITEMS			

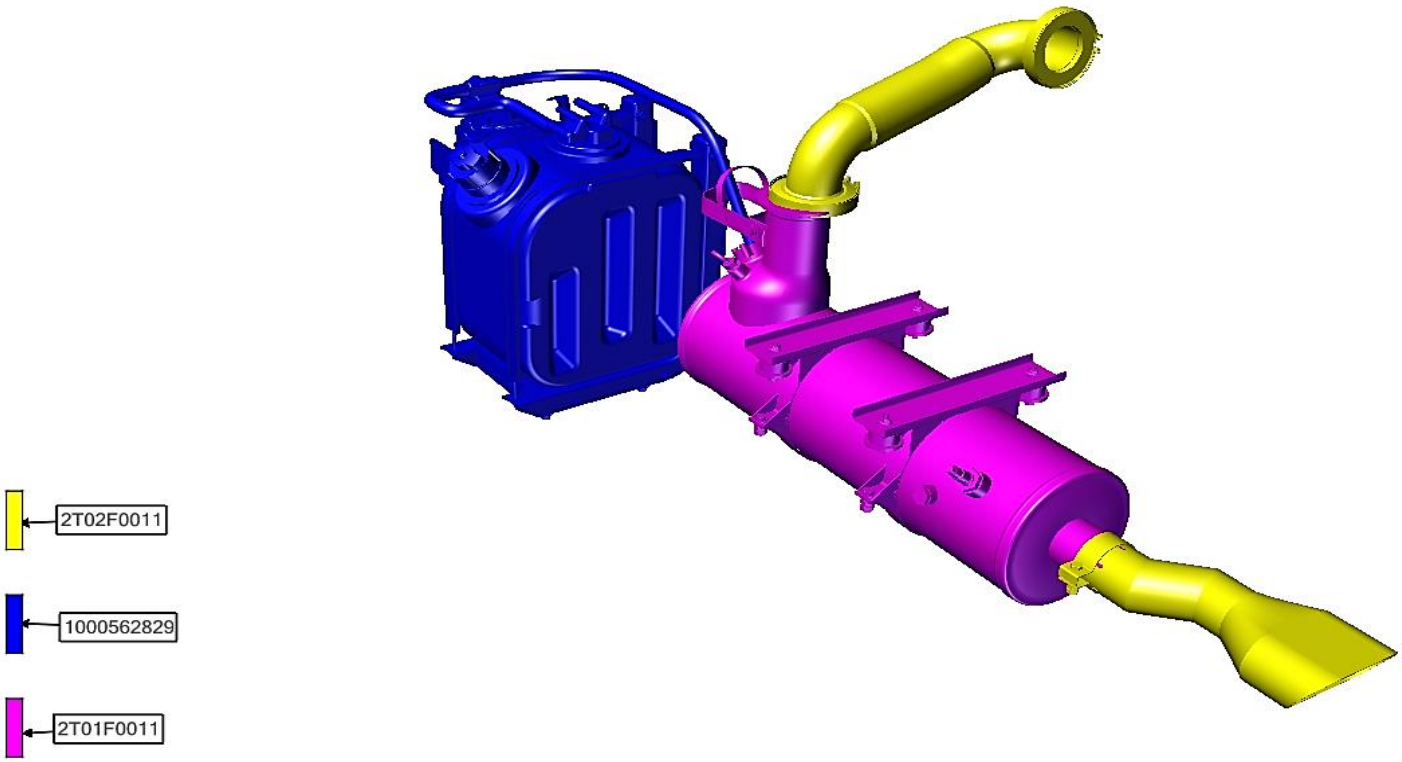

ASSB_NAME	PART NO.	NAME	QTY
EXHAUST AIR SYSTEM	2T01F0011	SCR TANK ASSY	1
	2T02F0011	EXHAUST PIPE ASSY	1
	1000562829	UREA TANK	1

ASSB_NAME	PART NO.	NAME	QTY
EXHAUST AIR SYSTEM			

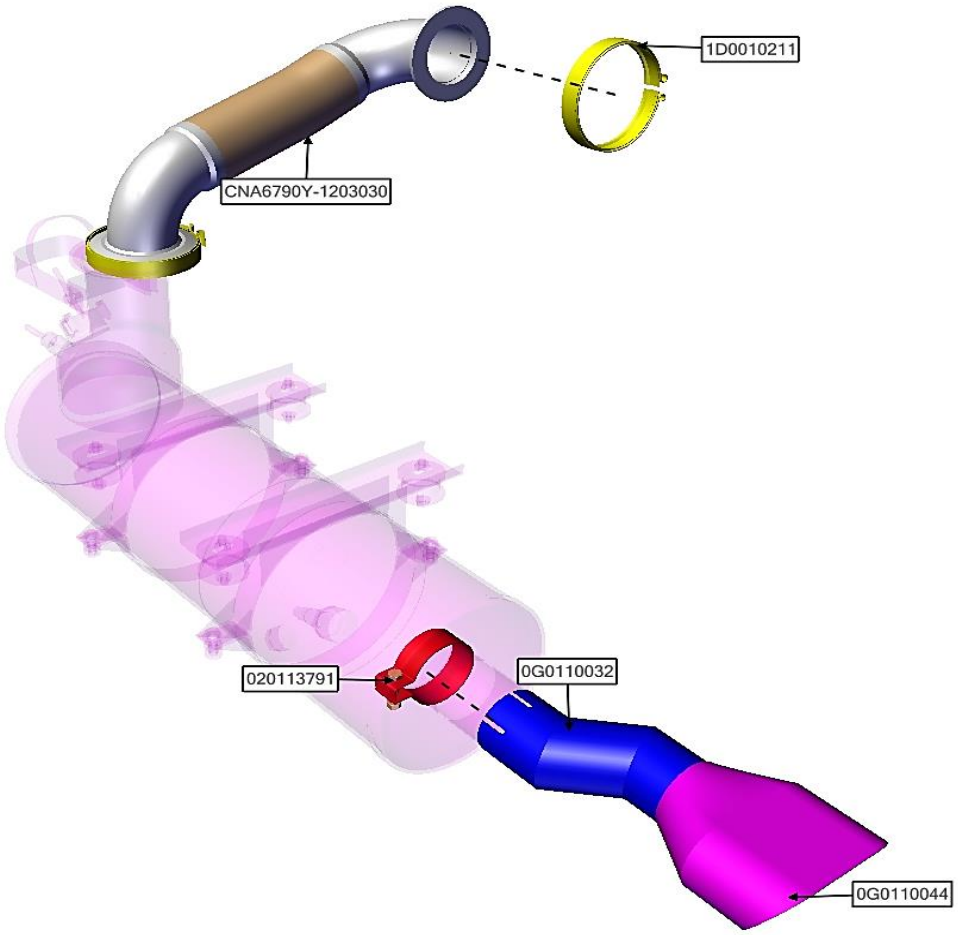

ASSB_NAME	PART NO.	NAME	QTY
EXHAUST PIPE ASSY	CNA6790Y-1203030	EXHAUST PIPE	1
	0G0110032	Exhaust Tail Pipe 01	1
	0G0110044	Exhaust Tail Pipe TB79S - NNS	1
	020113791	CLIP	1
	1D0010211	CLIP	2

ASSB_NAME	PART NO.	NAME	QTY
EXHAUST PIPE ASSY			

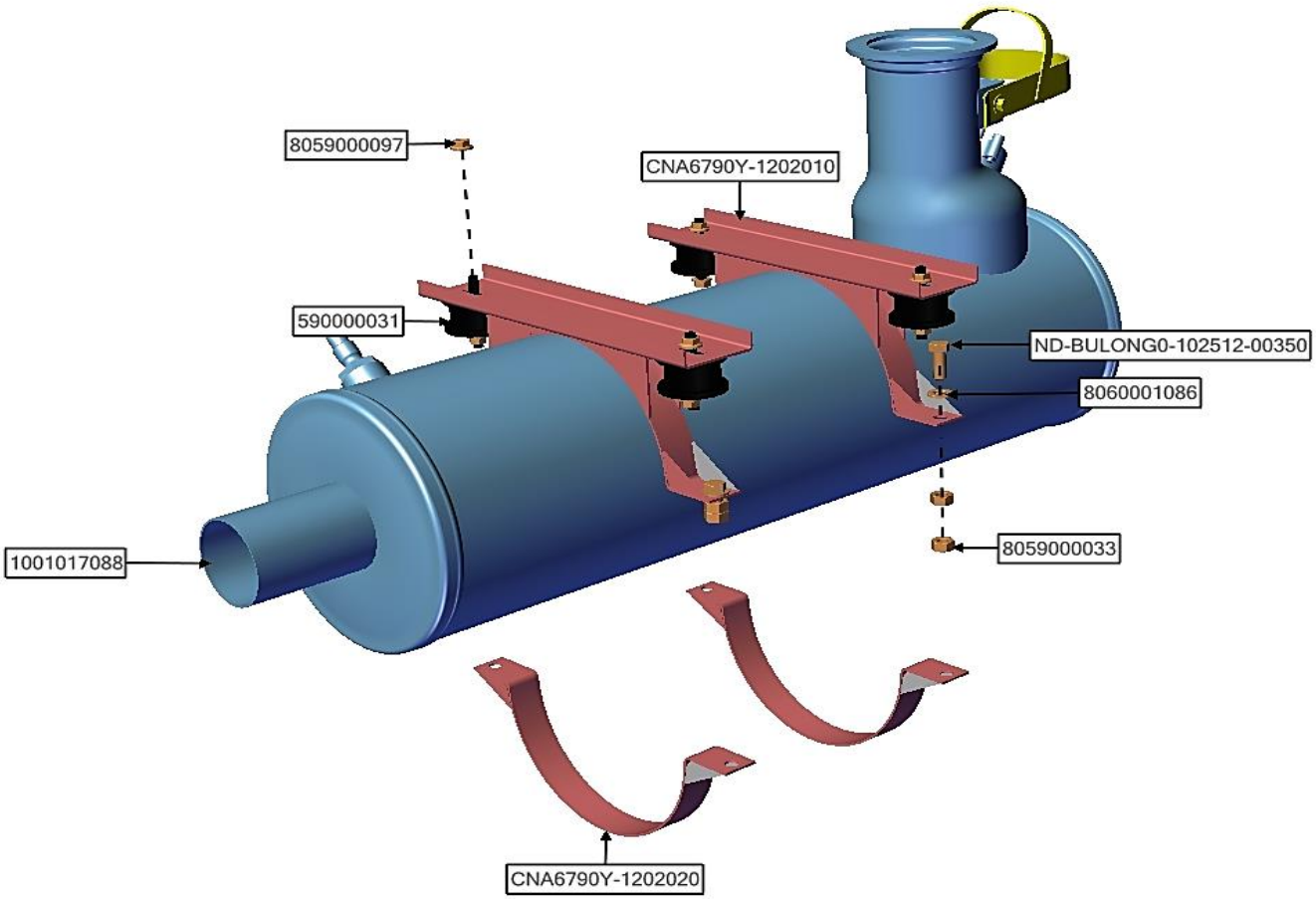

ASSB_NAME	PART NO.	NAME	QTY
SCR TANK ASSY	8059000033	NUT 10125	8
	8059000097	NUT 08125	8
	CNA6790Y-1202010	UPPER SCR TANK BELT	2
	CNA6790Y-1202020	LOWER SCR TANK BELT	2
	8060001086	WASHER Ø10	4
	590000031	RUBBER WASHER	4
	1001017088	SCR TANK	1

ASSB_NAME	PART NO.	NAME	QTY
SCR TANK ASSY	ND-BULONG0-102512-00350	BOLT 10045125	4

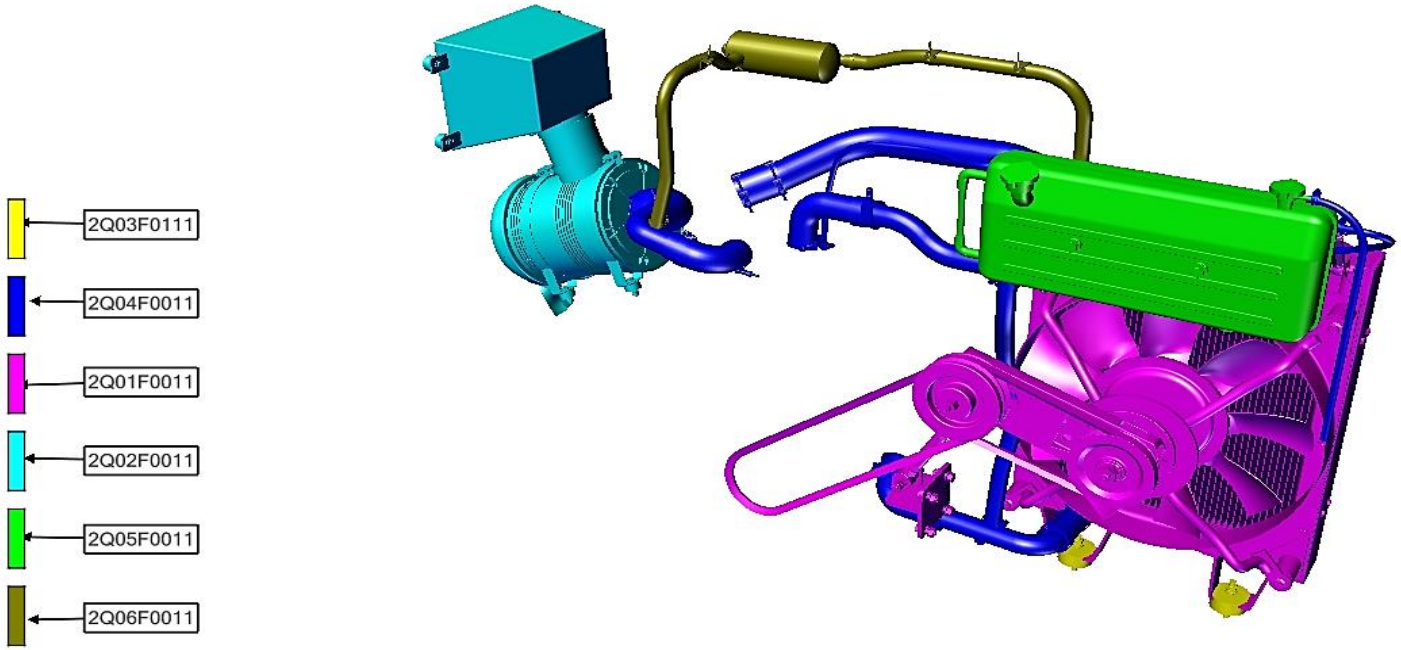

ASSB_NAME	PART NO.	NAME	QTY
COOLING SYSTEM	2Q02F0011	AIR FILTER ASSY	1
	2Q06F0011	SILENT TANK ASSY	1
	2Q05F0011	EXPANDING WATER TANK ASSY	1
	2Q03F0111	RADIATOR FRAME ASSY	1
	2Q04F0011	COOLING PIPE ASSY	1
	2Q01F0011	RADIATORS ASSY	1

ASSB_NAME	PART NO.	NAME	QTY
COOLING SYSTEM			

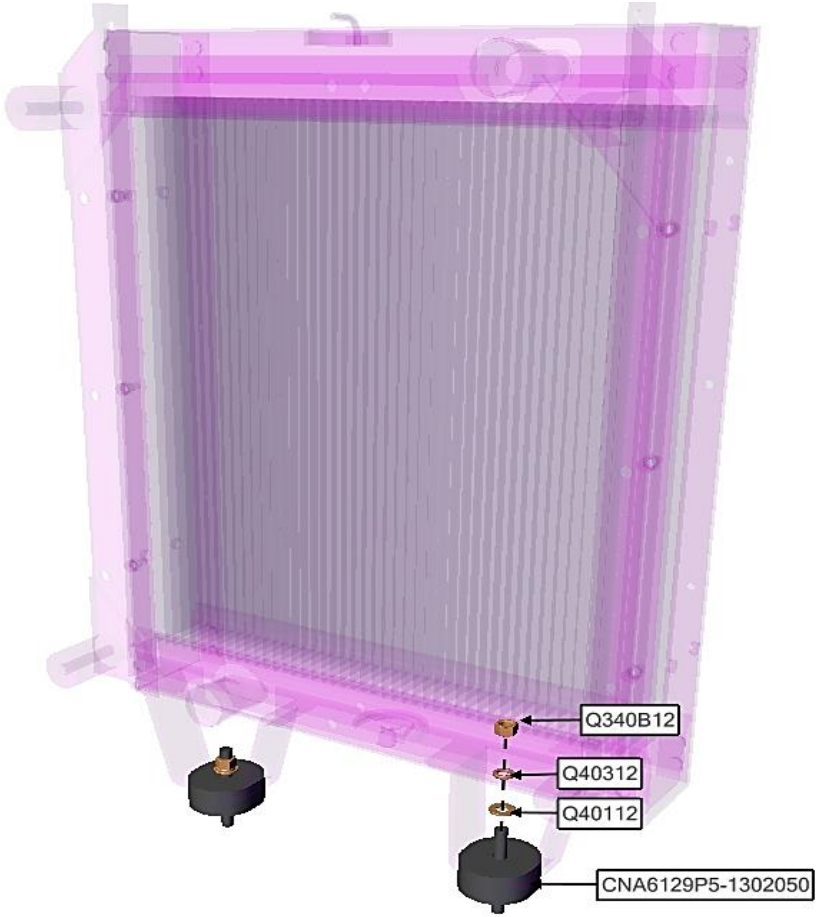

ASSB_NAME	PART NO.	NAME	QTY
RADIATOR FRAME ASSY	Q40312	SPLIT WASHER Ø12	4
	Q340B12	NUT 12175	4
	Q40112	WASHER Ø12	4
	CNA6129P5-1302050	RADIATOR RUBBER	2

ASSB_NAME	PART NO.	NAME	QTY
RADIATOR FRAME ASSY			

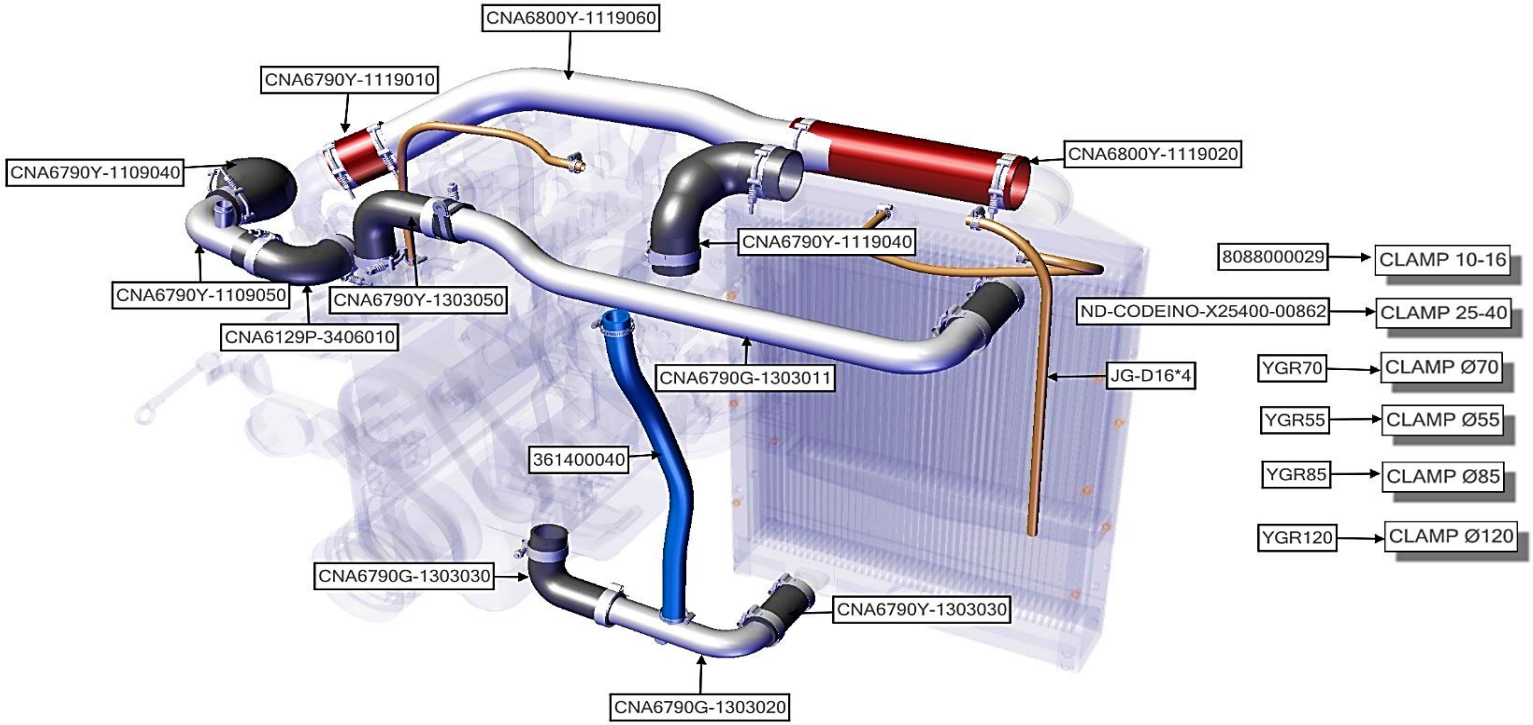

ASSB_NAME	PART NO.	NAME	QTY
COOLING PIPE ASSY	CNA6129P-3406010	RUBBER PIPE	1
	CNA6790Y-1109040	RUBBER PIPE	1
	361400040	WATER RUBBER PIPE 04	1
	CNA6790Y-1119040	RUBBER PIPE 06	1
	CNA6800Y-1119020	RUBBER PIPE 05	1
	CNA6790Y-1119010	RUBBER PIPE 04	1
	CNA6790G-1303030	RUBBER PIPE 03	1

ASSB_NAME	PART NO.	NAME	QTY
COOLING PIPE ASSY	CNA6790Y-1303030	RUBBER PIPE 02	2
	CNA6790Y-1303050	RUBBER PIPE 01	1
	JG-D16*4	RUBBER PIPE	3
	CNA6790G-1303020	WATER PIPE 02	1
	CNA6790G-1303011	WATER PIPE 01	1
	CNA6790Y-1109050	AIR PIPE 01	1
	CNA6800Y-1119060	STAINLESS PIPE 02	1

ASSB_NAME	PART NO.	NAME	QTY
COOLING PIPE ASSY	YGR120	CLAMP Ø120	1
	YGR85	CLAMP Ø85	5
	YGR70	CLAMP Ø70	4
	YGR55	CLAMP Ø55	8
	ND-CODEINO-X25400-00862	CLAMP 25-40	2
	8088000029	CLAMP 10-16	5

ASSB_NAME	PART NO.	NAME	QTY
COOLING PIPE ASSY			

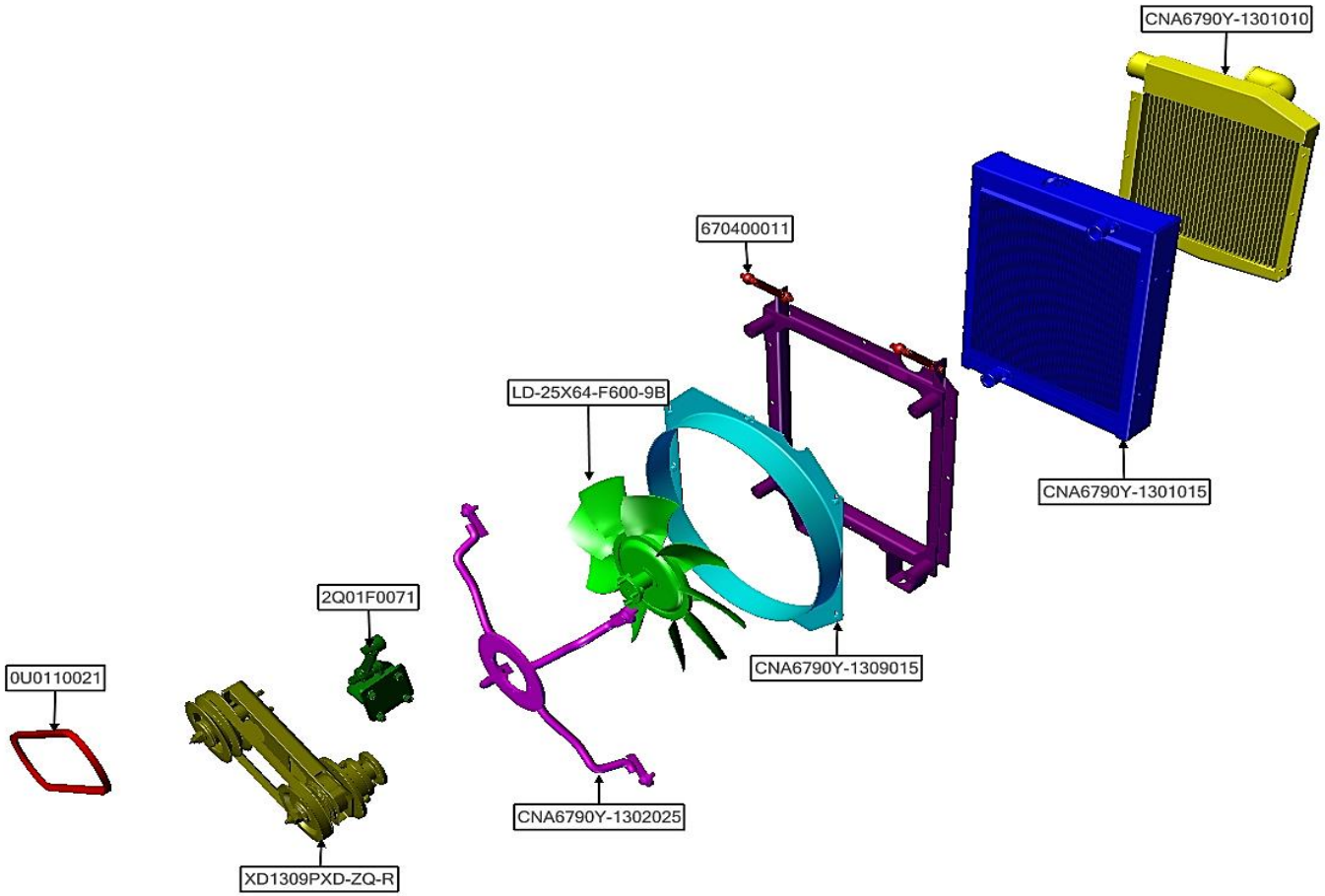

ASSB_NAME	PART NO.	NAME	QTY
RADIATORS ASSY	CNA6790Y-1309015	COOLING FAN COVER	1
	670400011	TURNBUCKLE	2
	XD1309PXD-ZQ-R	FAN DRIVING ASSY	1
	LD-25X64-F600-9B	COOLING FAN	1
	CNA6790Y-1301015	RADIATOR ASSY	1
	CNA6790Y-1301010	INTERCOOLER	1
	CNA6790Y-1302025	RADIATOR FRAME	1

ASSB_NAME	PART NO.	NAME	QTY
RADIATORS ASSY			

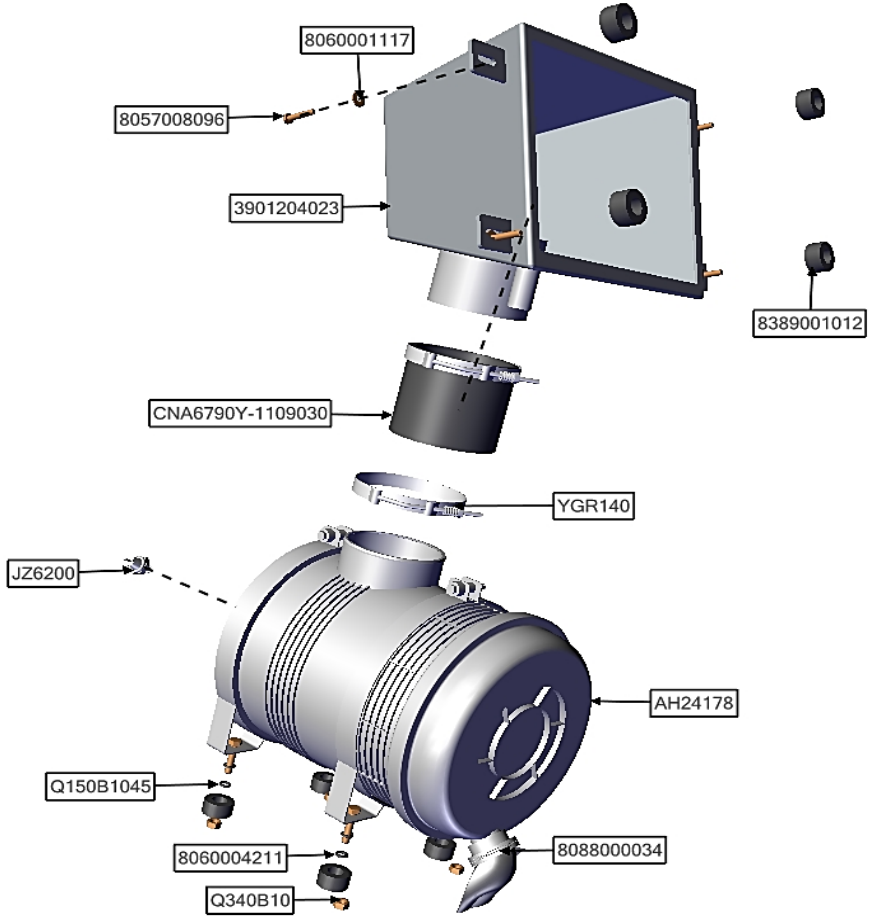

ASSB_NAME	PART NO.	NAME	QTY
AIR FILTER ASSY	CNA6790Y-1109030	RUBBER PIPE	1
	8060004211	SPLIT WASHER Ø10	8
	Q340B10	NUT 10150	4
	YGR140	CLAMP Ø140	2
	8088000034	CLAMP 40-60	1
	8060001117	WASHER Ø08	4
	3901204023	AIR FILTER PIPE	1

ASSB_NAME	PART NO.	NAME	QTY
AIR FILTER ASSY	JZ6200	AIR FILTER SENSOR	1
	8389001012	AIR FILTER RUBBER	8
	AH24178	AIR FILTER ASSY	1
	Q150B1045	BOLT 10045150	4
	8057008096	BOLT 08040125	4

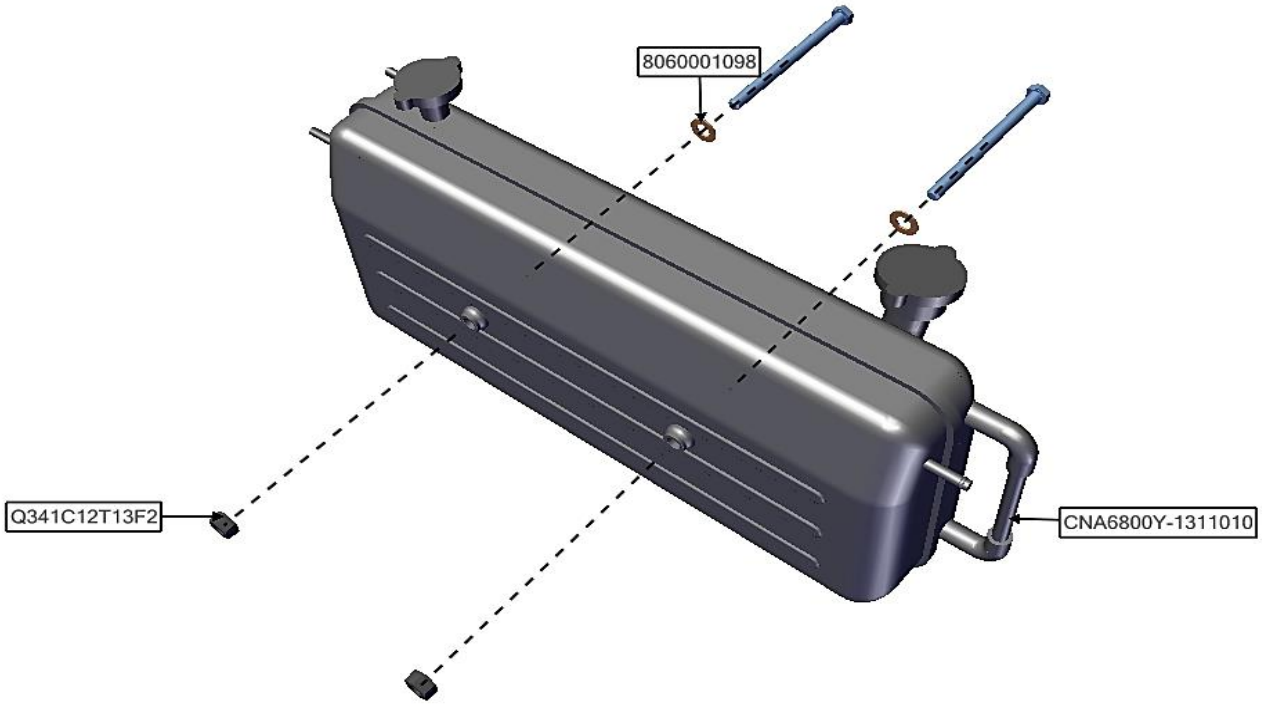

ASSB_NAME	PART NO.	NAME	QTY
EXPANDING WATER TANK ASSY	Q341C12T13F2	NUT 12150	2
	8060001098	WASHER Ø14	2
	CNA6800Y-1311010	EXPANDING WATER TANK	1

ASSB_NAME	PART NO.	NAME	QTY
EXPANDING WATER TANK ASSY			

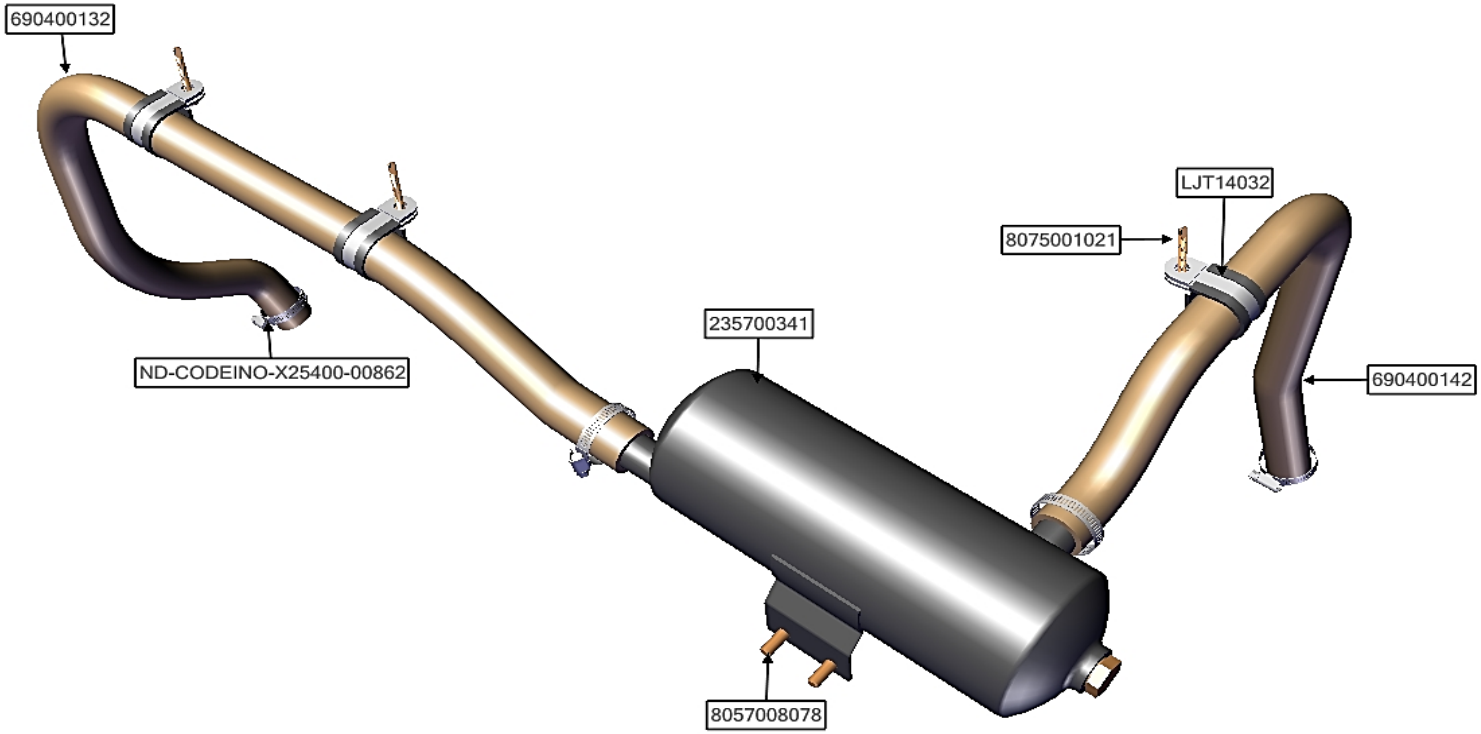

ASSB_NAME	PART NO.	NAME	QTY
SILENT TANK ASSY	690400132	SILENT TANK PIPE	1
	690400142	RUBBER PIPE	1
	ND-CODEINO-X25400-00862	CLAMP 25-40	4
	LJT14032	CLIP Ø32	3
	8075001021	SCREW 0550	3
	235700341	SILENT TANK	1
	8057008078	BOLT 08020125	2

ASSB_NAME	PART NO.	NAME	QTY
SILENT TANK ASSY			

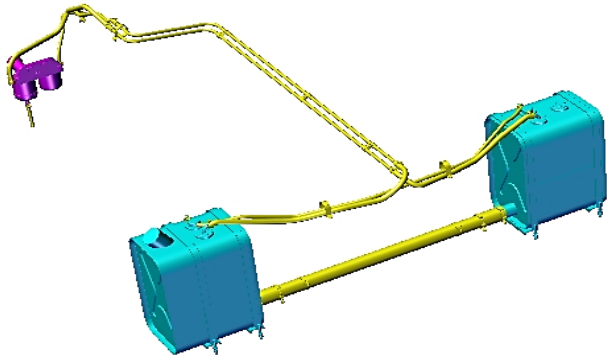

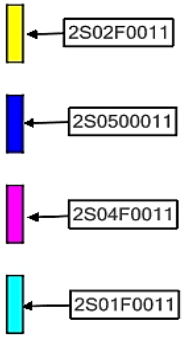

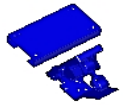

ASSB_NAME	PART NO.	NAME	QTY
FUEL SYSTEM	2S01F0011	FUEL TANK ASSY	1
	2S04F0011	FUEL MANUAL PUMP ASSY	1
	2S0500011	ACCELABRATOR PEDAL ASSY	1
	2S02F0011	FUEL PIPE ASSY	1

ASSB_NAME	PART NO.	NAME	QTY
FUEL SYSTEM			

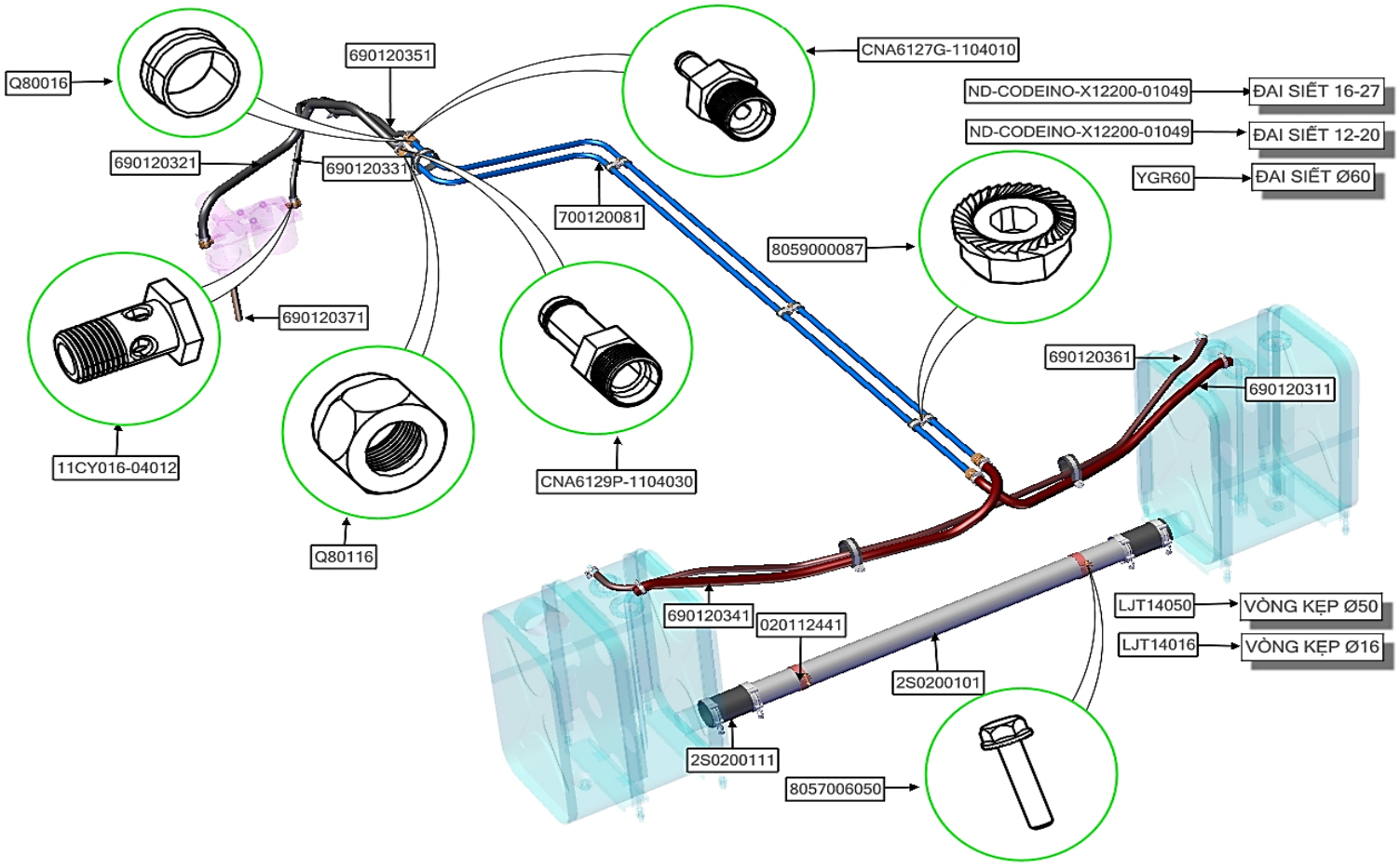

ASSB_NAME	PART NO.	NAME	QTY
FUEL PIPE ASSY	690120371	FUEL EXHAUST PIPE	1
	690120361	FUEL PIPE 06	1
	690120351	FUEL PIPE 05	1
	690120341	FUEL PIPE 04	1
	690120331	FUEL PIPE 03	1
	690120321	FUEL PIPE 02	1
	690120311	FUEL PIPE 01	1

ASSB_NAME	PART NO.	NAME	QTY
FUEL PIPE ASSY	2S0200101	FUEL CONNECTING PIPE	1
	Q80016	OUTER CONNECTOR Ø16	4
	Q80116	NUT M22	4
	8059000087	NUT 06100	6
	YGR60	CLAMP Ø60	4
	ND-CODEINO-X12200-01049	CLAMP 16-27	6
	ND-CODEINO-X12200-01049	CLAMP 12-20	7

ASSB_NAME	PART NO.	NAME	QTY
FUEL PIPE ASSY	LJT14050	CLIP Ø50	3
	LJT14016	CLIP Ø16	6
	2S0200111	RUBBER	2
	CNA6129P-1104030	CONNECTOR PIPE Ø16	3
	CNA6127G-1104010	CONNECTOR PIPE Ø10	1
	020112441	FUEL TANK CLIP	2
	11CY016-04012	HOLLOW BOLT M16	2
	8057006050	BOLT 06025100	6

ASSB_NAME	PART NO.	NAME	QTY
FUEL PIPE ASSY			

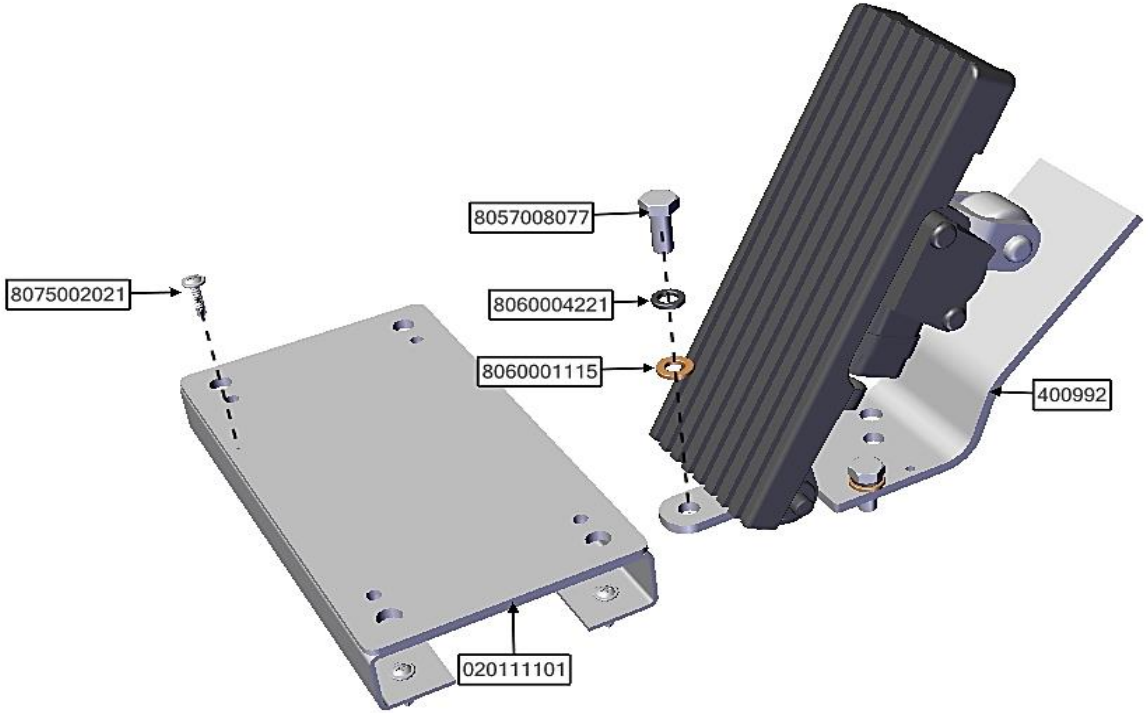

ASSB_NAME	PART NO.	NAME	QTY
ACCELABRATOR PEDAL ASSY	8060004221	SPLIT WASHER Ø08	3
	8060001115	WASHER Ø08	3
	8075002021	SCREW 0420	4
	20111101	ACCELABRATE PEDAL	1
	400992	ACCELABRATE PEDAL	1
	8057008077	BOLT 08020125	3

ASSB_NAME	PART NO.	NAME	QTY
ACCELABRATOR PEDAL ASSY			

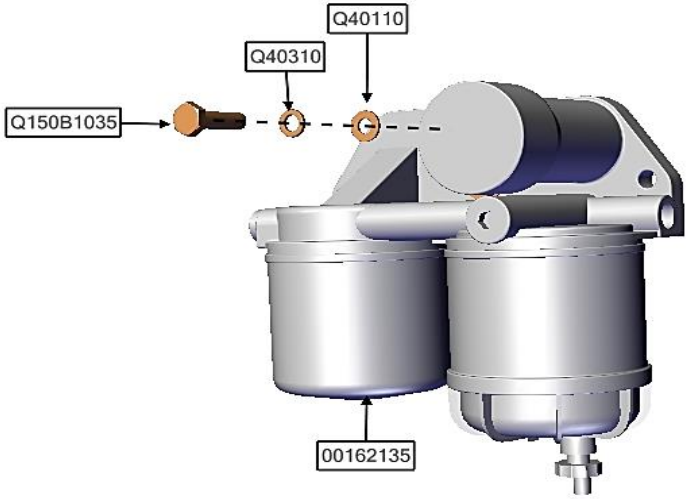

ASSB_NAME	PART NO.	NAME	QTY
FUEL MANUAL PUMP ASSY	Q40310	SPLIT WASHER Ø10	3
	Q40110	WASHER Ø10	3
	00162135	FUEL DRYER	1
	Q150B1035	BOLT 10035150	3

ASSB_NAME	PART NO.	NAME	QTY
FUEL MANUAL PUMP ASSY			

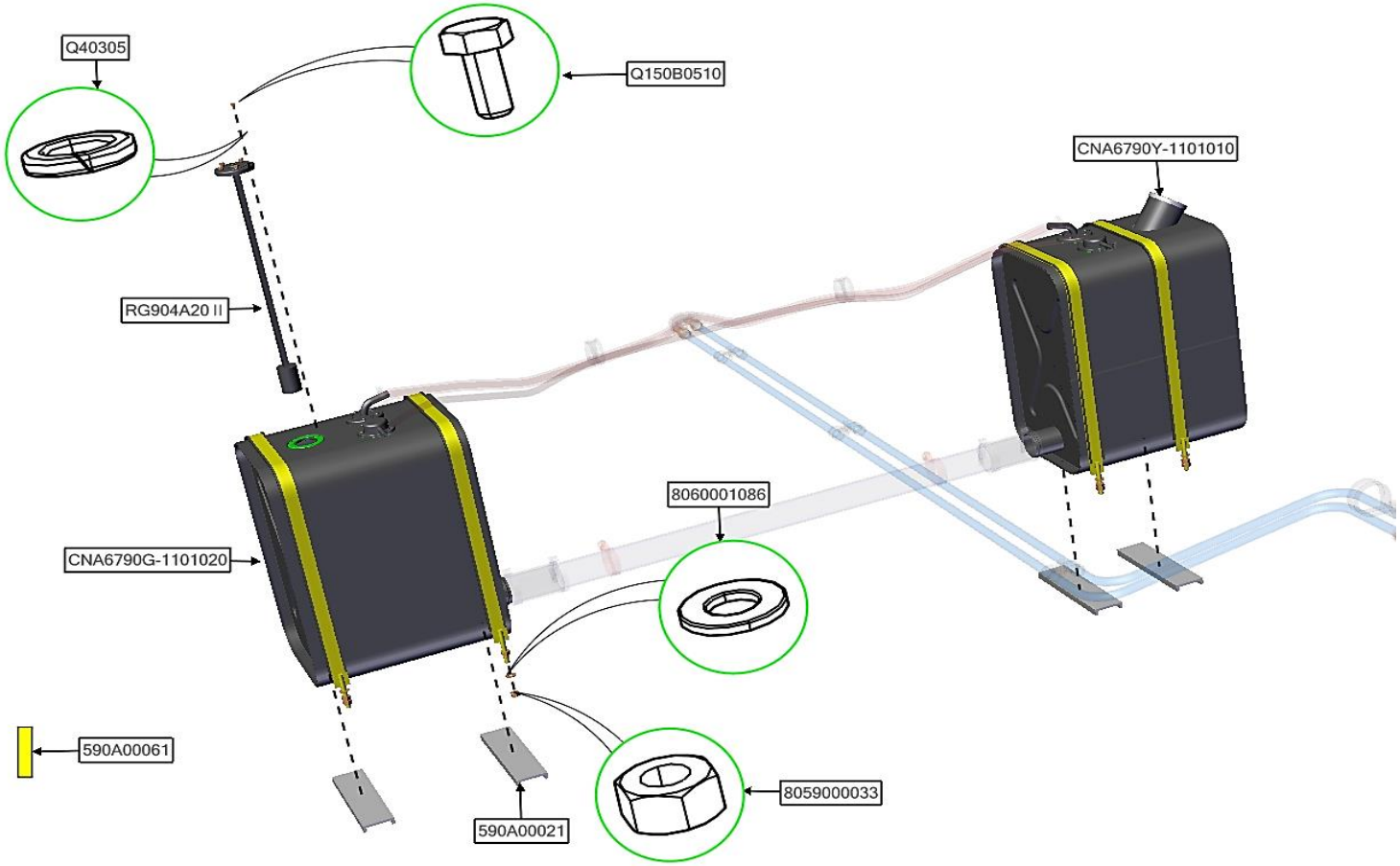

ASSB_NAME	PART NO.	NAME	QTY
FUEL TANK ASSY	Q40305	SPLIT WASHER Ø05	5
	590A00021	WASHER	4
	8059000033	NUT 10125	16
	8060001086	WASHER Ø10	8
	CNA6790G-1101020	FULE TANK 02	1
	CNA6790Y-1101010	FULE TANK 01	1
	590A00061	RUBBER WASHER	4

ASSB_NAME	PART NO.	NAME	QTY
FUEL TANK ASSY	CNA6790Y-1102010	FUEL TANK BELT	4
	RG904A20 Ⅱ	FULE SENSOR	1
	Q150B0510	BOLT 05010100	5