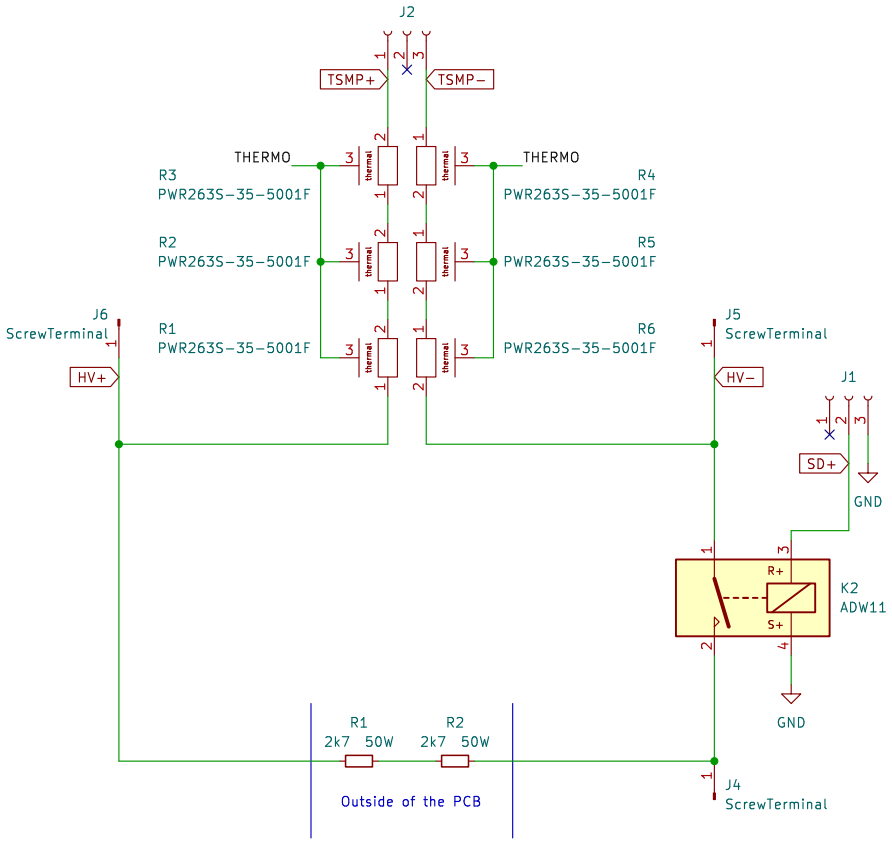


Capacitor value: 300 uF
Initial charge voltage: 588 V
Safety threshold voltage: 60 V
Resistance value: 5400 R

Safety Voltage achieved by: 3.6975 s
Initial power across resistors: 64.0267 W
Time constant: 1.62 s
Energy discharged to Zero volts: 51.8616 J

Reviewer:
**Author: Marco W. Santoro**

Sheet:
File: main.kicad_sch

**Title: Discharge**

| | | |
|---|---|---|
| Size: A4 | Date: | **Revision: 1.0** |
| KiCad E.D.A. kicad 7.0.10 | | Page: 1/1 |