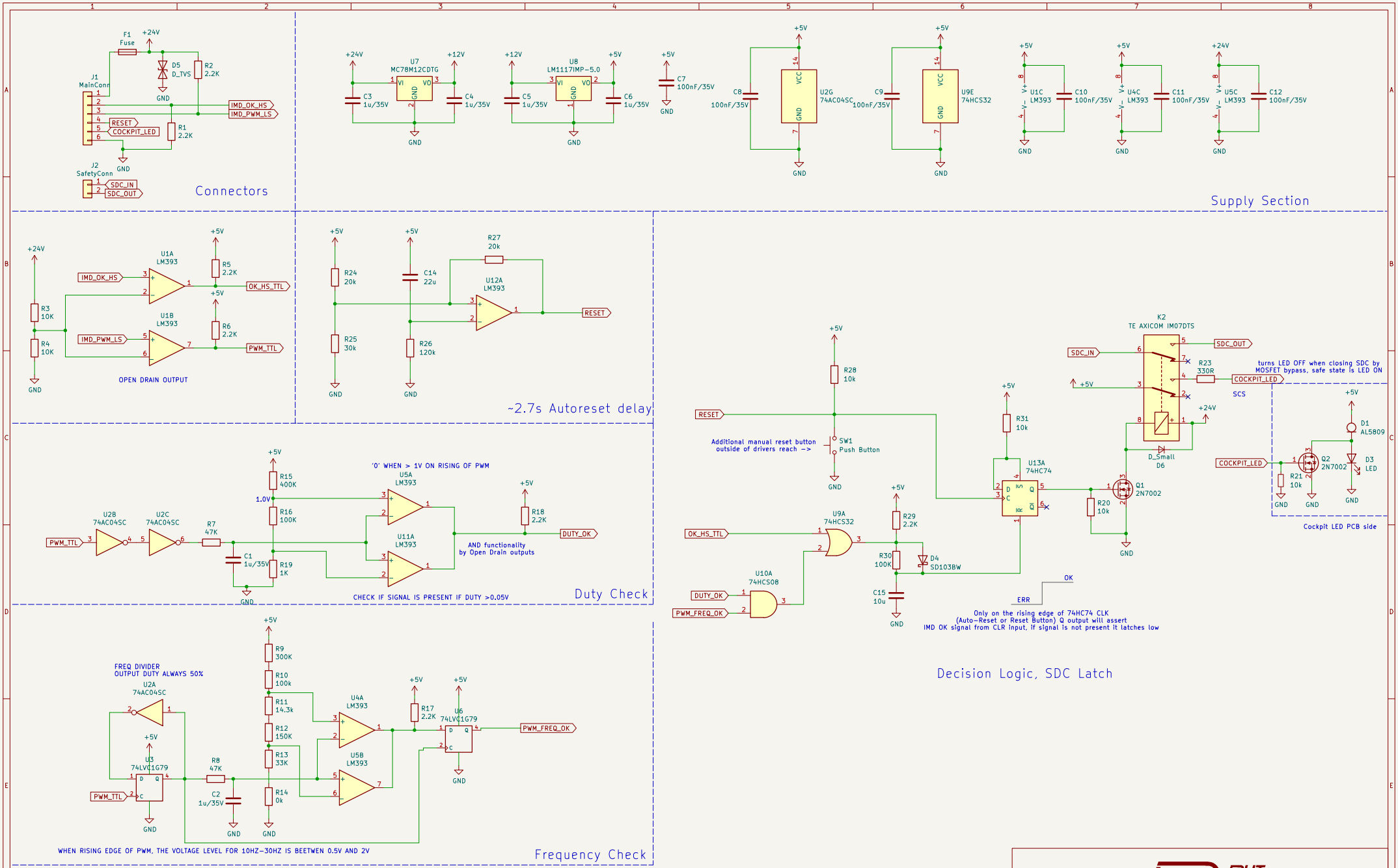

Reviewer: Szymon Sambor
Author: Przemysław Złota
Sheet: Root
File: IMD_SAFETY_2024.kicad_sch

Title: IMD Shutdown Circuit Logic

Size: A3	Date:	**Revision: 1.0**
KiCad E.D.A. 8.0.0		Page: 1/1