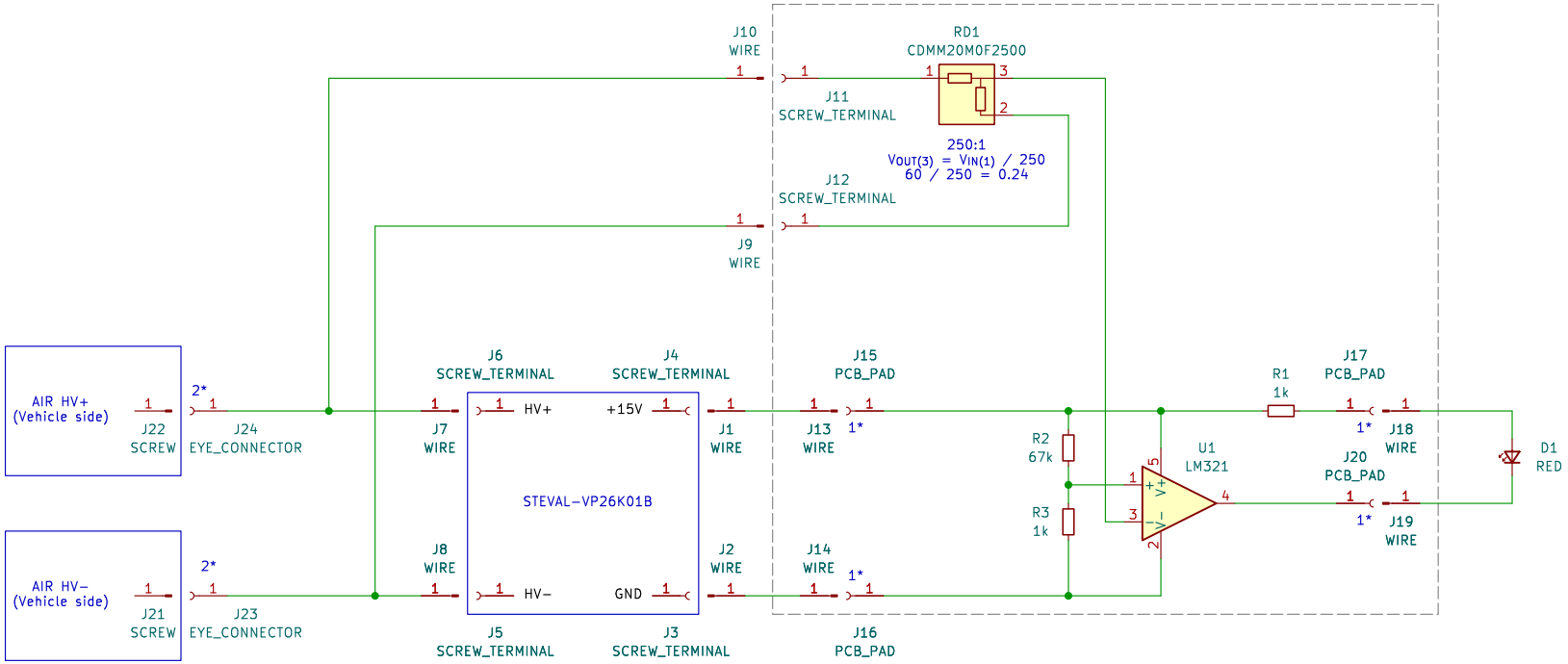

1. All PCB_PAD / WIRE connections are wire directly soldered to a PAD on PCB and secured with adhesive
2. All SCREW / EYE_CONNECTOR connections are eye_connectors mounted to screws with a nut

Sheet: /		
File: PUTM_EV_VOLTAGE_INDICATOR_2024.kicad_sch		
Title:		
Size: A4	Date:	**Rev:**
KiCad E.D.A. 8.0.0		Id: 1/1