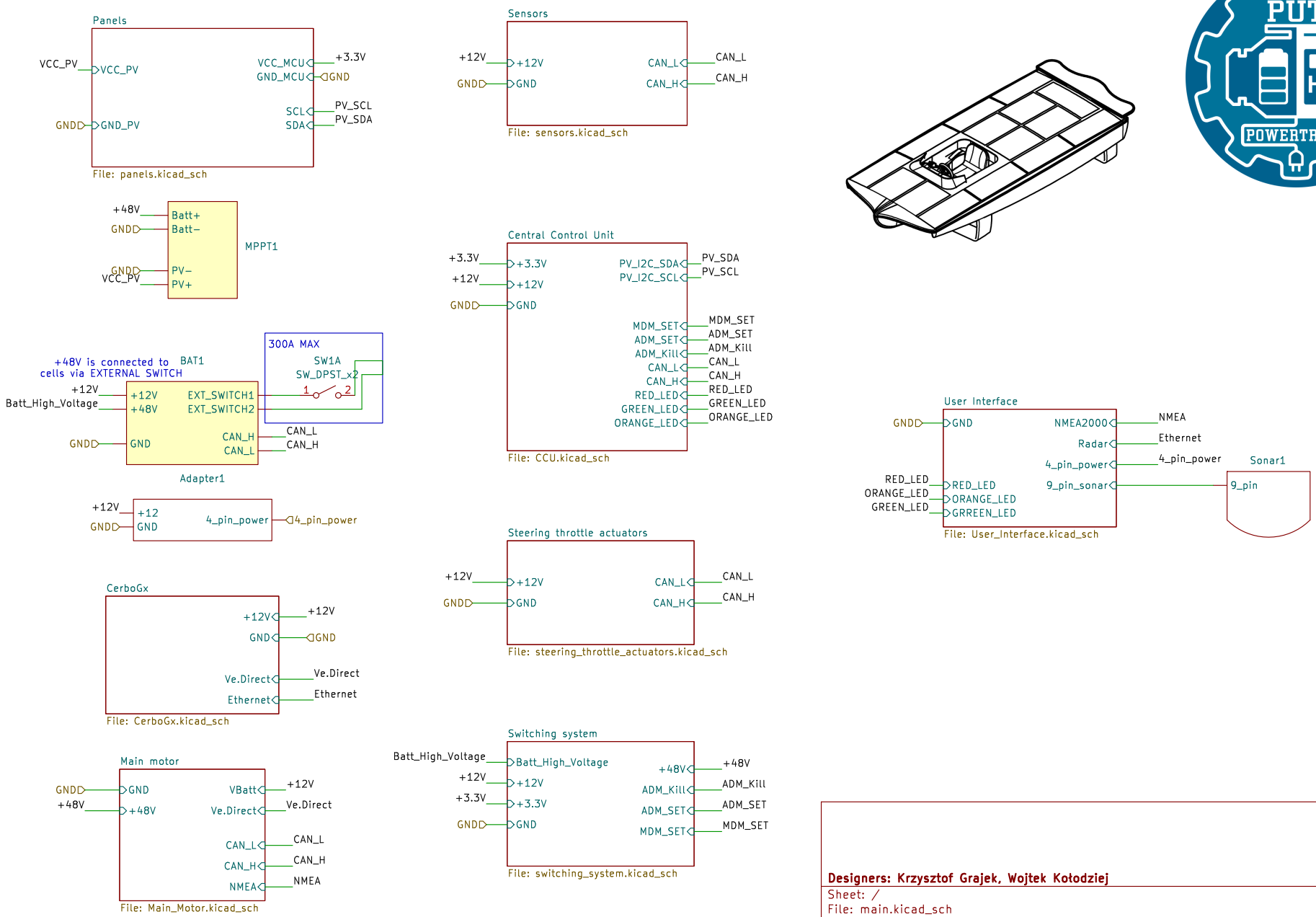

Designers: Krzysztof Grajek, Wojtek Kołodziej

Sheet: /

File: main.kicad_sch

Title: POWERBoat Schematic

Size: A4	Date: 2025-01-09	**Rev:**
KiCad E.D.A. 8.0.3		Id: 1/36

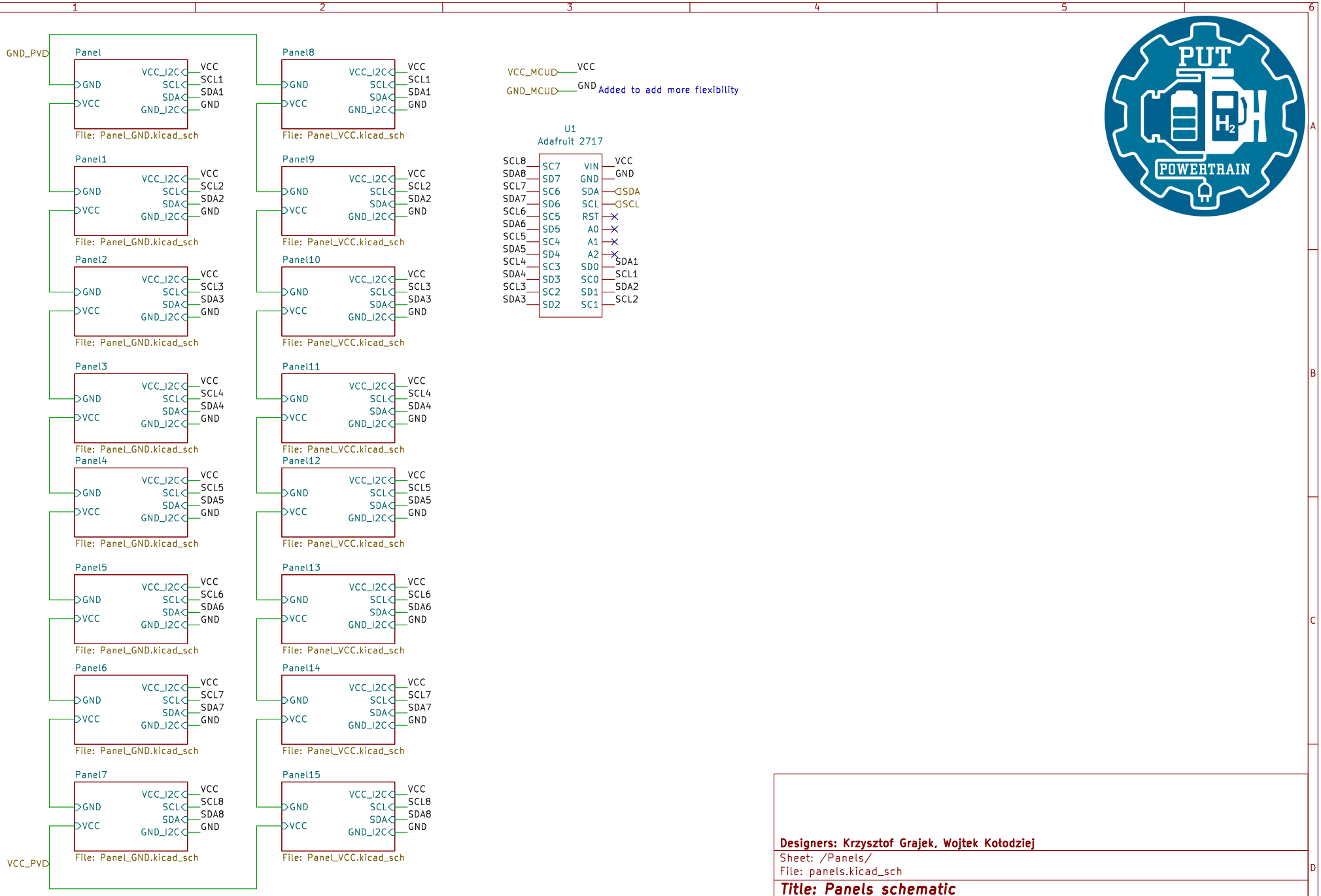

Designers: Krzysztof Grajek, Wojtek Kołodziej

Sheet: /Panels/
File: panels.kicad_sch

Title: Panels schematic

Size: A4	Date: 2025-01-09	**Rev:**
KiCad E.D.A. 8.0.3		Id: 2/36

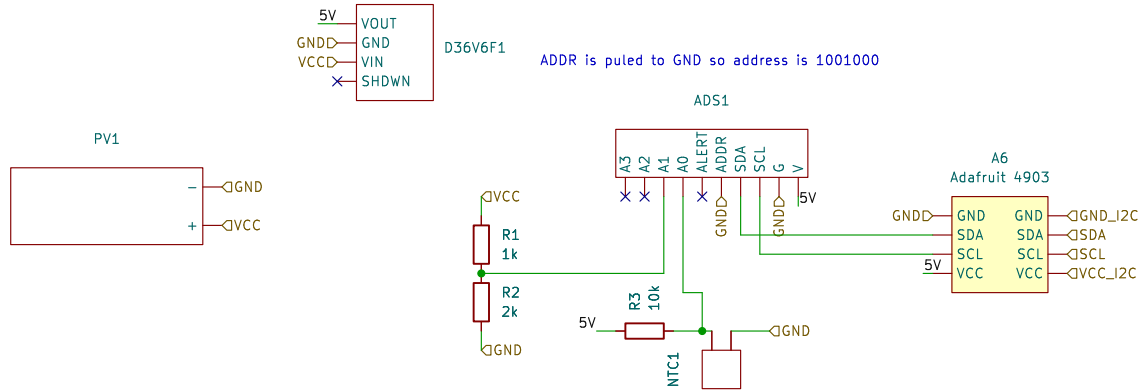

Designers: Krzysztof Grajek, Wojtek Kołodziej

Sheet: /Panels/Panel/
File: Panel_GND.kicad_sch

Title:

Size: A4	Date: 2025-01-09	**Rev:**
KiCad E.D.A. 8.0.3		Id: 3/36

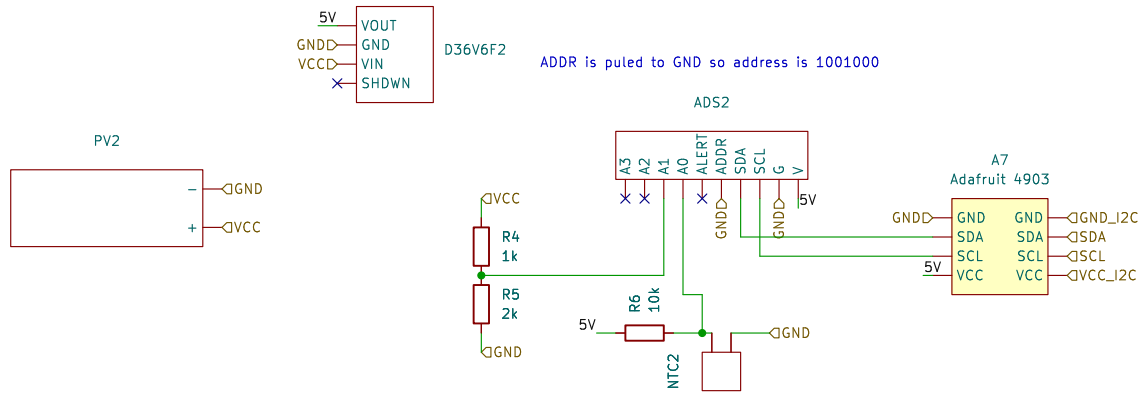

Designers: Krzysztof Grajek, Wojtek Kołodziej

Sheet: /Panels/Panel1/
File: Panel_GND.kicad_sch

Title:

Size: A4	Date: 2025-01-09	**Rev:**
KiCad E.D.A. 8.0.3		Id: 4/36

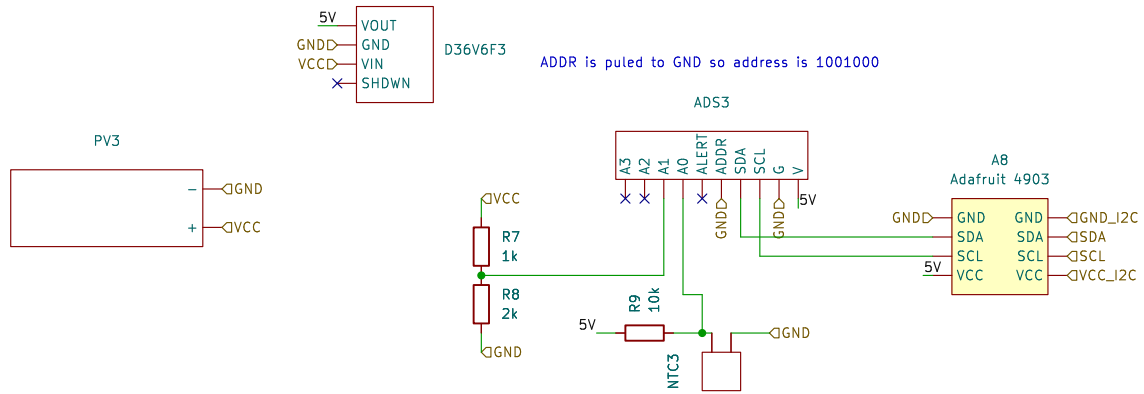

Designers: Krzysztof Grajek, Wojtek Kołodziej		
Sheet: /Panels/Panel2/		
File: Panel_GND.kicad_sch		
Title:		
Size: A4	Date: 2025-01-09	**Rev:**
KiCad E.D.A. 8.0.3		Id: 5/36

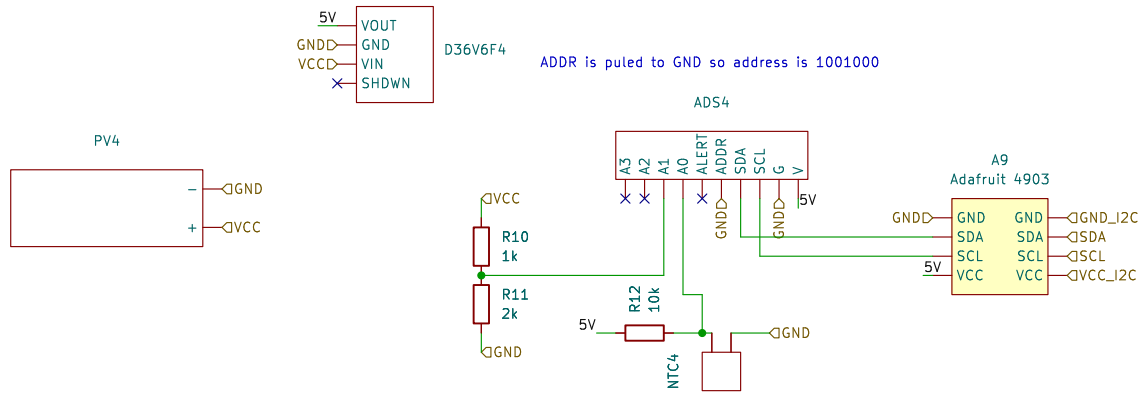

Designers: Krzysztof Grajek, Wojtek Kołodziej

Sheet: /Panels/Panel3/
File: Panel_GND.kicad_sch

Title:

Size: A4	Date: 2025-01-09	**Rev:**
KiCad E.D.A. 8.0.3		Id: 6/36

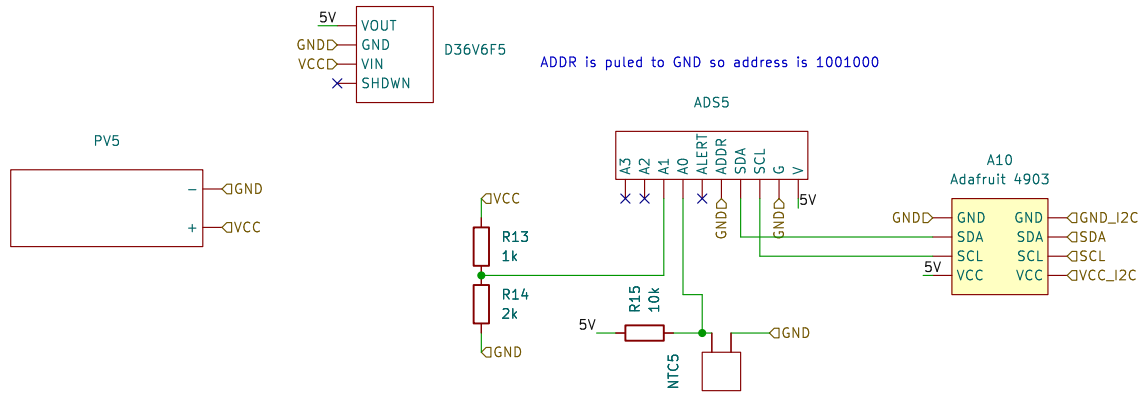

Designers: Krzysztof Grajek, Wojtek Kołodziej

Sheet: /Panels/Panel4/
File: Panel_GND.kicad_sch

Title:

Size: A4	Date: 2025-01-09	**Rev:**
KiCad E.D.A. 8.0.3		Id: 7/36

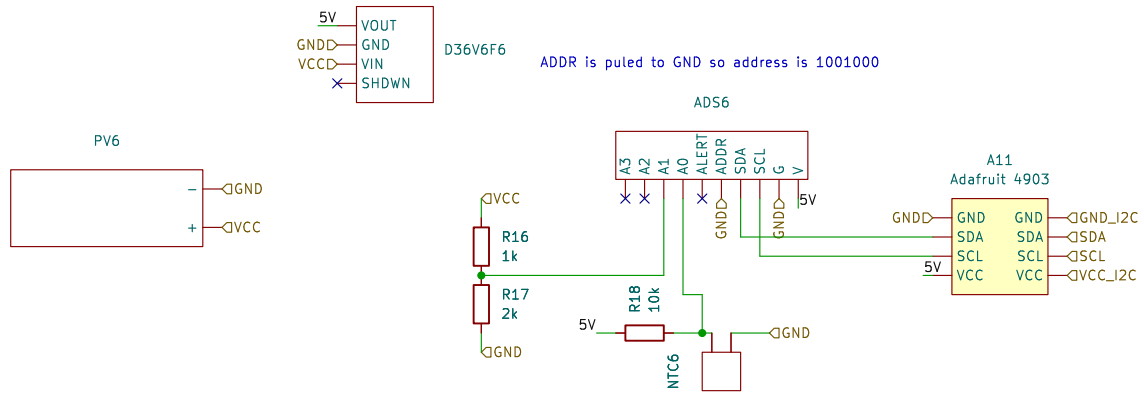

Designers: Krzysztof Grajek, Wojtek Kołodziej

Sheet: /Panels/Panel5/
File: Panel_GND.kicad_sch

Title:

Size: A4	Date: 2025-01-09	**Rev:**
KiCad E.D.A. 8.0.3		Id: 8/36

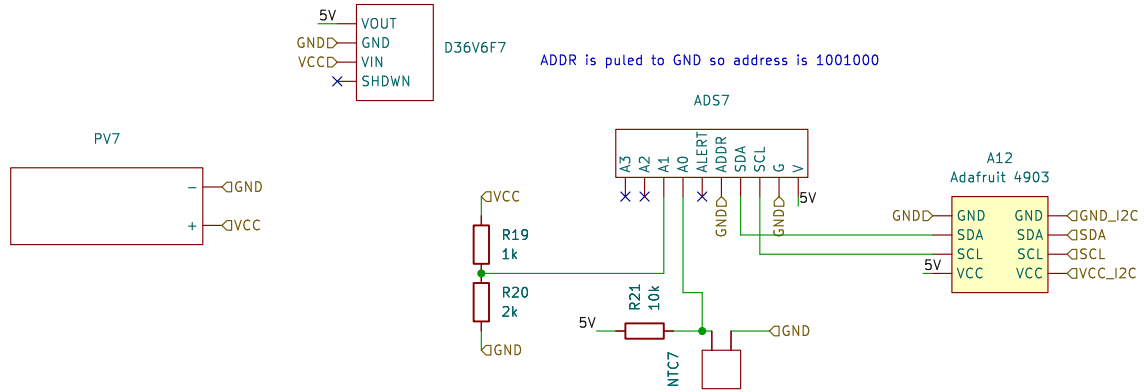

Designers: Krzysztof Grajek, Wojtek Kołodziej

Sheet: /Panels/Panel6/
File: Panel_GND.kicad_sch

Title:

Size: A4	Date: 2025-01-09	**Rev:**
KiCad E.D.A. 8.0.3		Id: 9/36

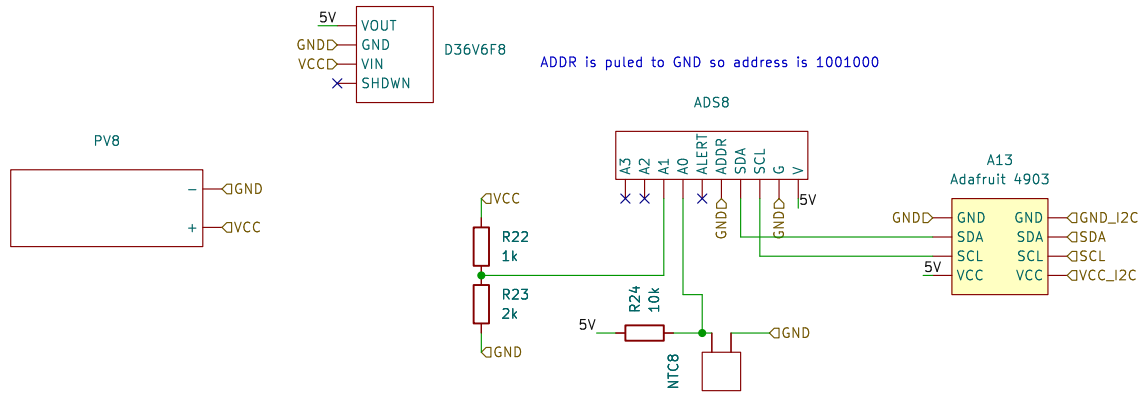

Designers: Krzysztof Grajek, Wojtek Kołodziej

Sheet: /Panels/Panel7/
File: Panel_GND.kicad_sch

Title:

Size: A4	Date: 2025-01-09	**Rev:**
KiCad E.D.A. 8.0.3		Id: 10/36

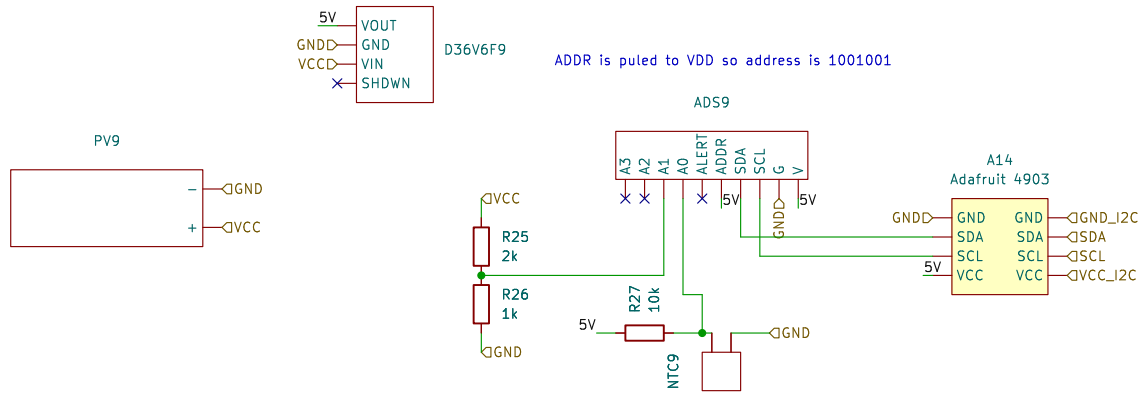

Designers: Krzysztof Grajek, Wojtek Kołodziej

Sheet: /Panels/Panel8/
File: Panel_VCC.kicad_sch

Title:

Size: A4	Date: 2025-01-09	**Rev:**
KiCad E.D.A. 8.0.3		Id: 11/36

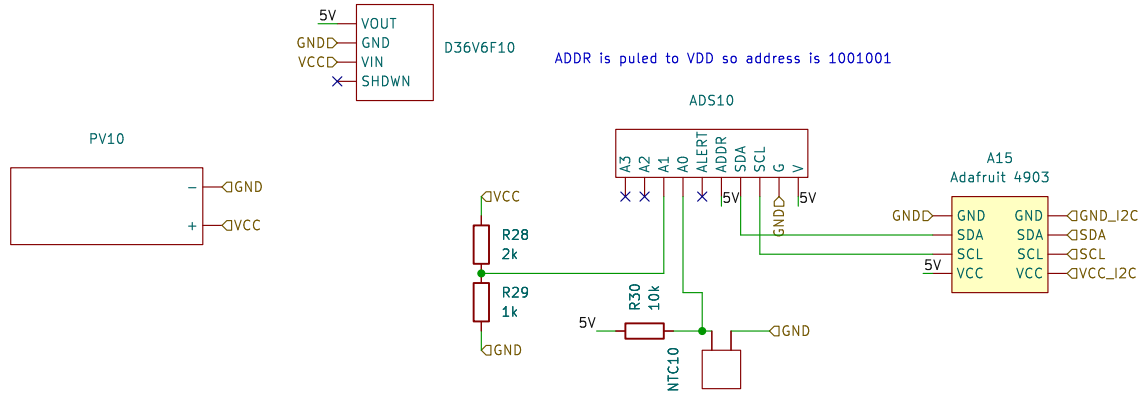

Designers: Krzysztof Grajek, Wojtek Kołodziej

Sheet: /Panels/Panel9/
File: Panel_VCC.kicad_sch

Title:

Size: A4	Date: 2025-01-09	**Rev:**
KiCad E.D.A. 8.0.3		Id: 12/36

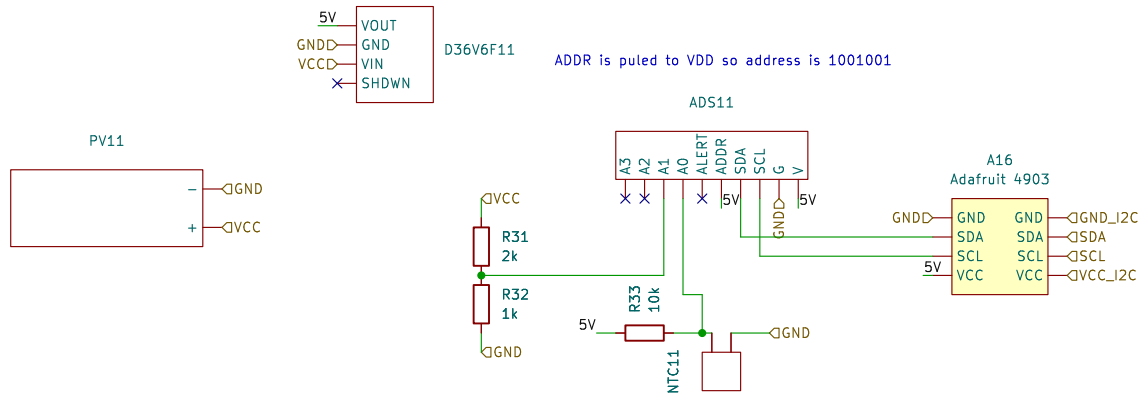

Designers: Krzysztof Grajek, Wojtek Kołodziej

Sheet: /Panels/Panel10/
File: Panel_VCC.kicad_sch

Title:

Size: A4	Date: 2025-01-09	**Rev:**
KiCad E.D.A. 8.0.3		Id: 13/36

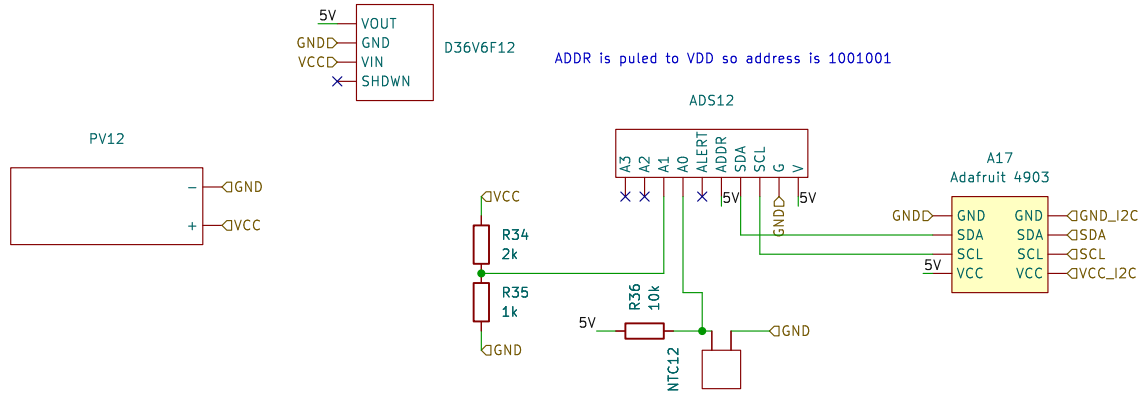

Designers: Krzysztof Grajek, Wojtek Kołodziej

Sheet: /Panels/Panel11/
File: Panel_VCC.kicad_sch

Title:

Size: A4	Date: 2025-01-09	**Rev:**
KiCad E.D.A. 8.0.3		Id: 14/36

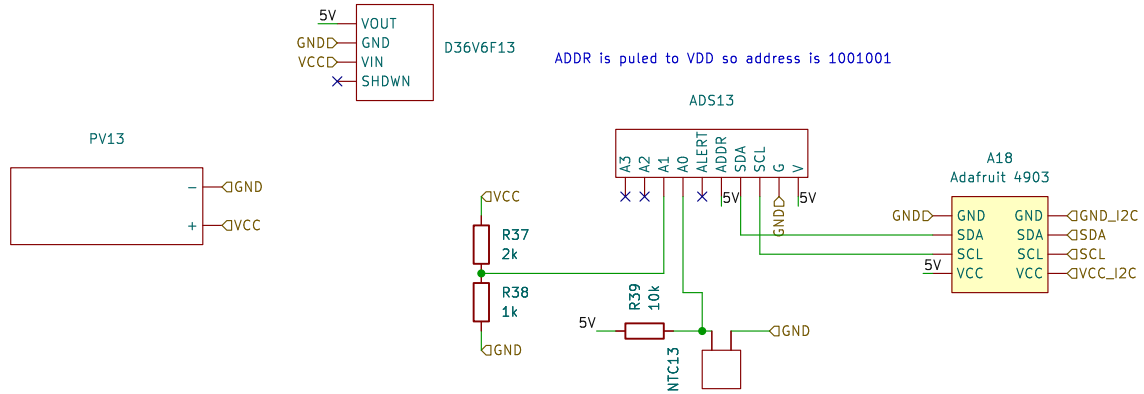

Designers: Krzysztof Grajek, Wojtek Kołodziej

Sheet: /Panels/Panel12/
File: Panel_VCC.kicad_sch

Title:

Size: A4	Date: 2025-01-09	**Rev:**
KiCad E.D.A. 8.0.3		Id: 15/36

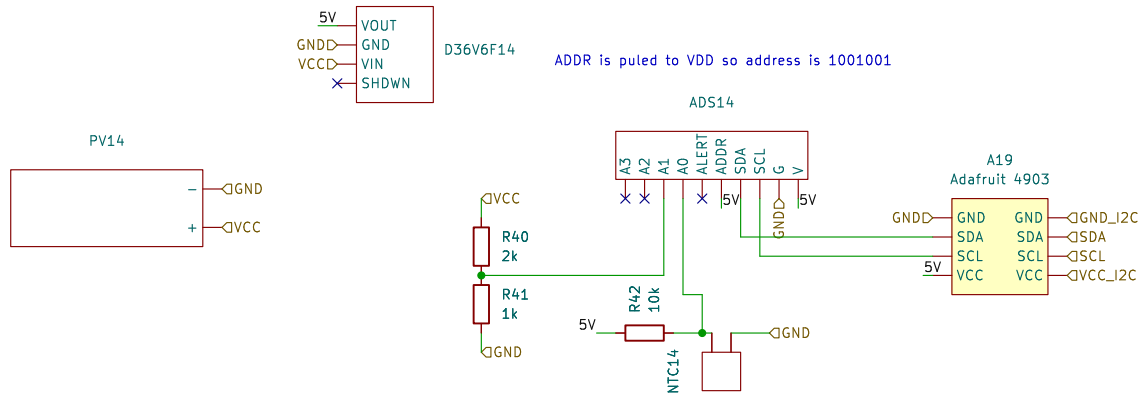

Designers: Krzysztof Grajek, Wojtek Kołodziej

Sheet: /Panels/Panel13/
File: Panel_VCC.kicad_sch

Title:

Size: A4	Date: 2025-01-09	**Rev:**
KiCad E.D.A. 8.0.3		Id: 16/36

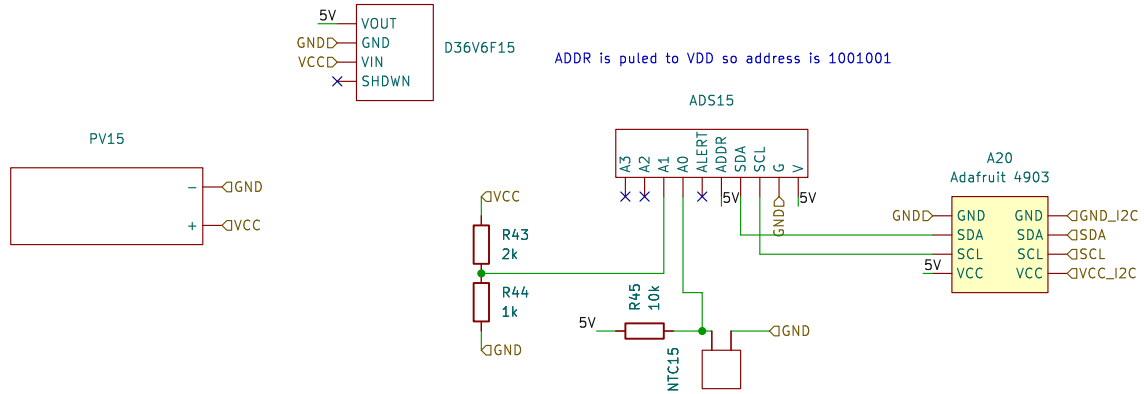

Designers: Krzysztof Grajek, Wojtek Kołodziej

Sheet: /Panels/Panel14/
File: Panel_VCC.kicad_sch

Title:

Size: A4	Date: 2025-01-09	**Rev:**
KiCad E.D.A. 8.0.3		Id: 17/36

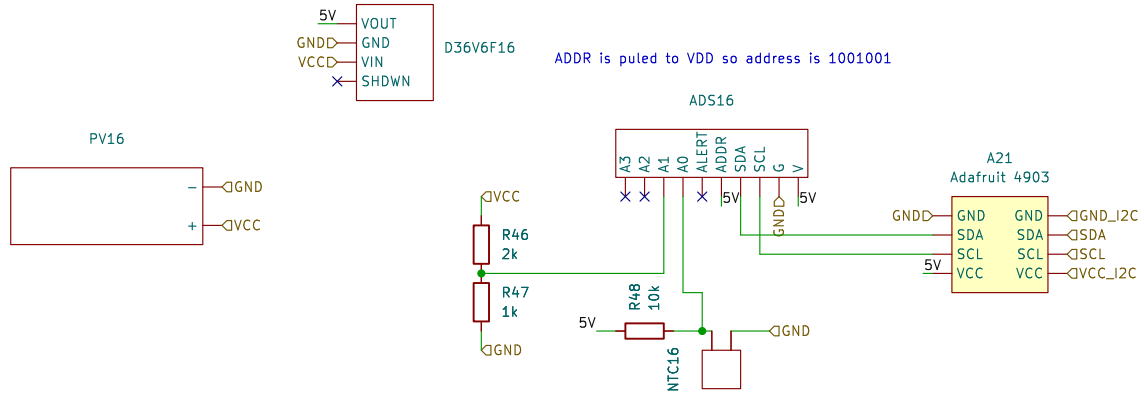

Designers: Krzysztof Grajek, Wojtek Kołodziej

Sheet: /Panels/Panel15/
File: Panel_VCC.kicad_sch

Title:

Size: A4	Date: 2025-01-09	**Rev:**
KiCad E.D.A. 8.0.3		Id: 18/36

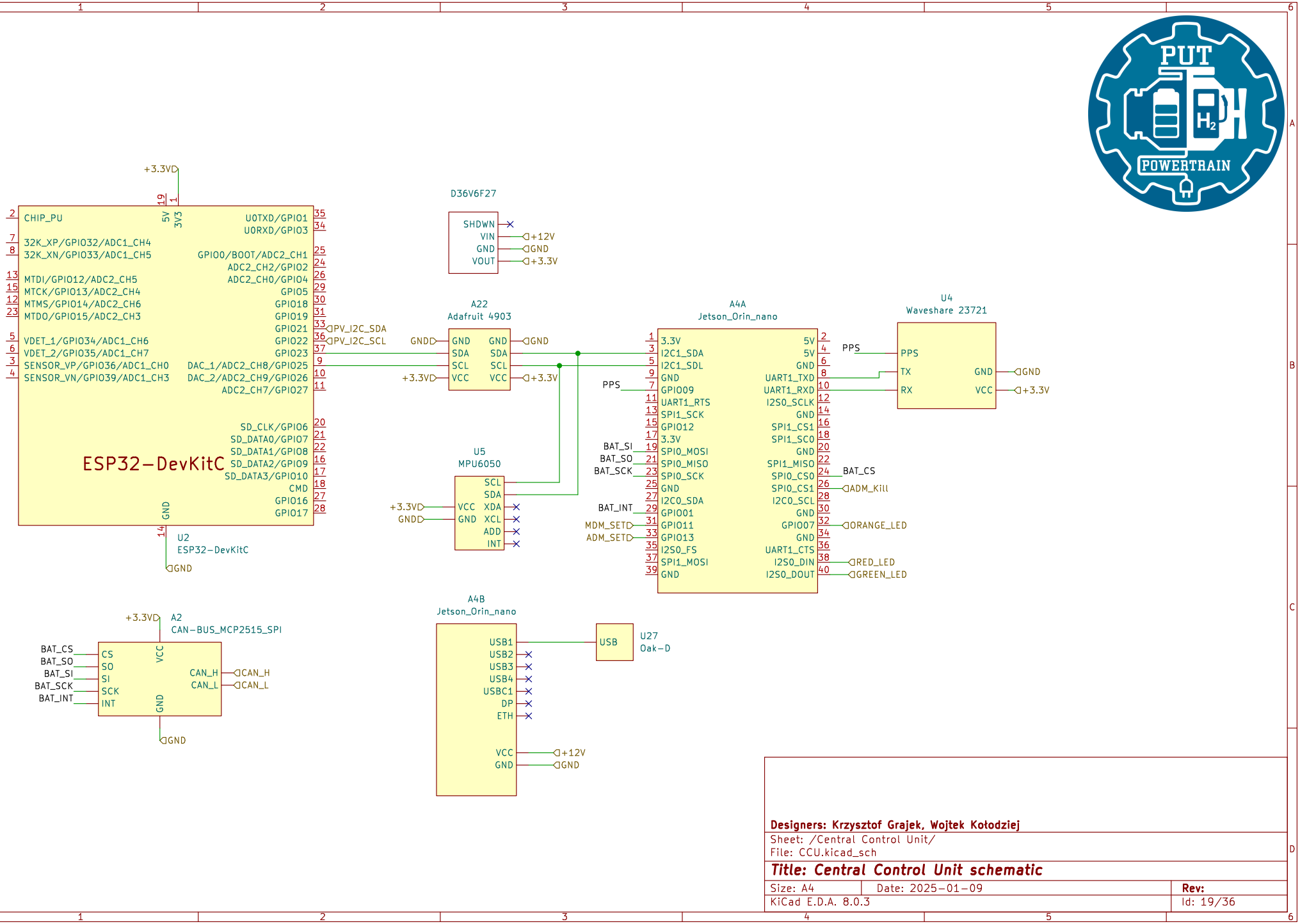

Designers: Krzysztof Grajek, Wojtek Kołodziej

Sheet: /Central Control Unit/
File: CCU.kicad_sch

Title: Central Control Unit schematic

Size: A4	Date: 2025-01-09	**Rev:**
KiCad E.D.A. 8.0.3		Id: 19/36

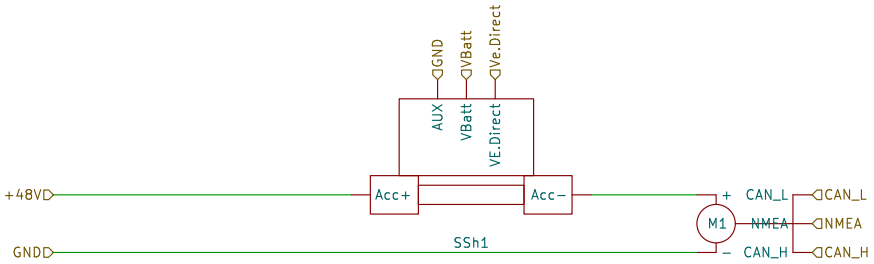

Designers: Krzysztof Grajek, Wojtek Kołodziej

Sheet: /Main motor/
File: Main_Motor.kicad_sch

Title: Main motor schematic

Size: A4	Date: 2025-01-09	**Rev:**
KiCad E.D.A. 8.0.3		Id: 20/36

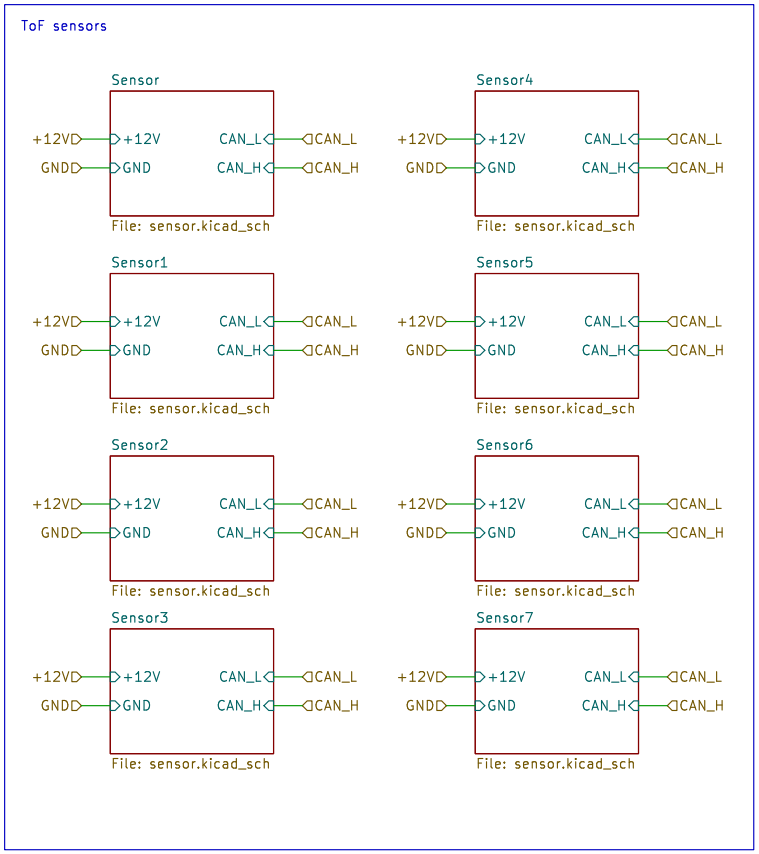

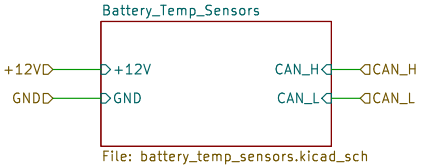

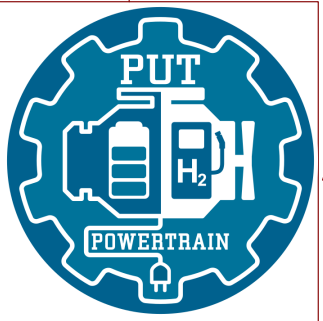

Designers: Krzysztof Grajek, Wojtek Kołodziej

Sheet: /Sensors/
File: sensors.kicad_sch

Title: Sensors schematic

Size: A4	Date: 2025-01-09	**Rev:**
KiCad E.D.A. 8.0.3		Id: 21/36

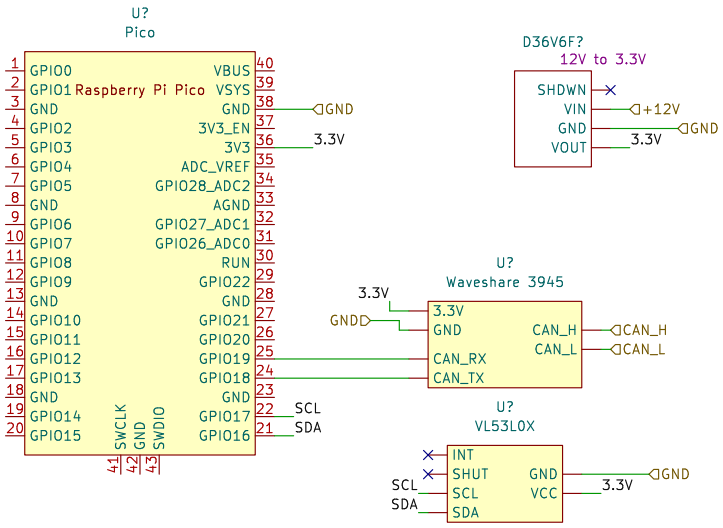

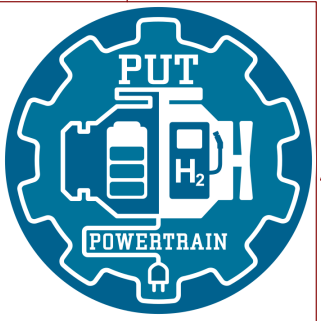

Designers: Krzysztof Grajek, Wojtek Kołodziej

Sheet: /Sensors/Sensor/
File: sensor.kicad_sch

Title:

Size: A4	Date: 2025-01-09	**Rev:**
KiCad E.D.A. 8.0.3		Id: 22/36

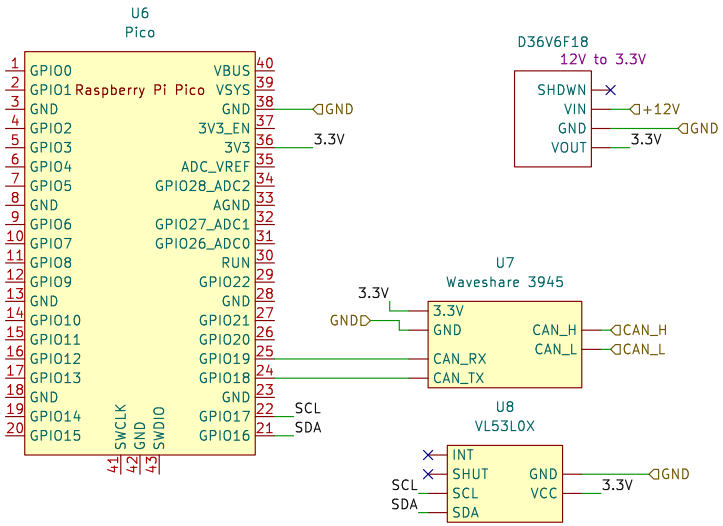

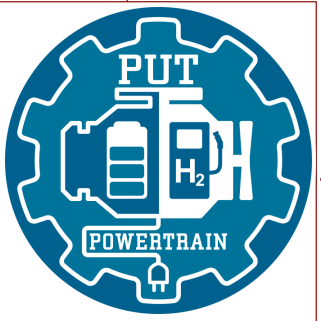

Designers: Krzysztof Grajek, Wojtek Kołodziej		
Sheet: /Sensors/Sensor1/ File: sensor.kicad_sch		
Title:		
Size: A4	Date: 2025-01-09	**Rev:**
KiCad E.D.A. 8.0.3		Id: 23/36

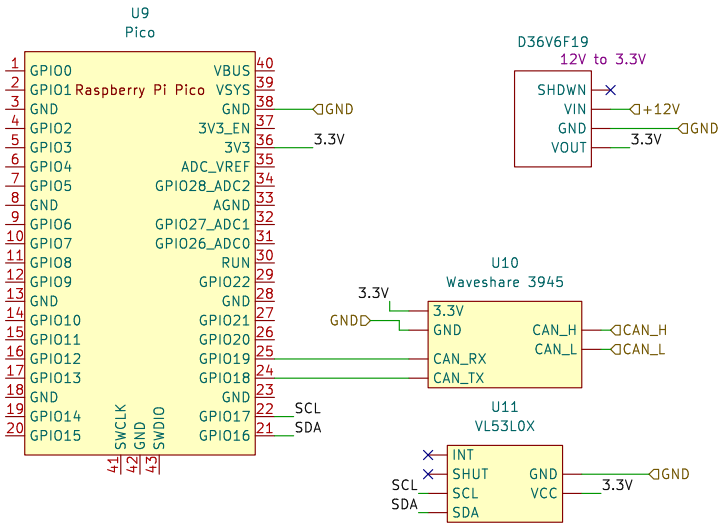

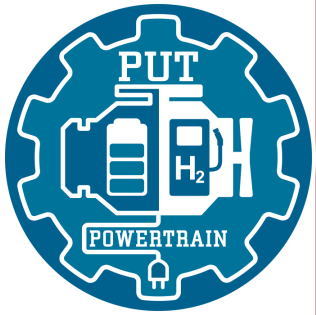

Designers: Krzysztof Grajek, Wojtek Kołodziej

Sheet: /Sensors/Sensor2/
File: sensor.kicad_sch

Title:

Size: A4	Date: 2025-01-09	**Rev:**
KiCad E.D.A. 8.0.3		Id: 24/36

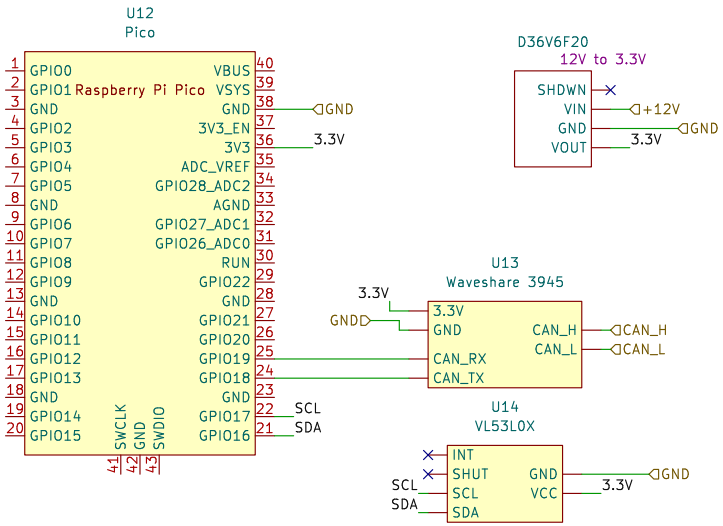

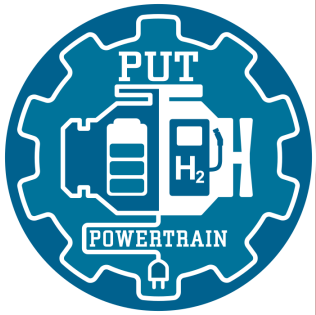

Designers: Krzysztof Grajek, Wojtek Kołodziej

Sheet: /Sensors/Sensor3/
File: sensor.kicad_sch

Title:

Size: A4	Date: 2025-01-09	**Rev:**
KiCad E.D.A. 8.0.3		Id: 25/36

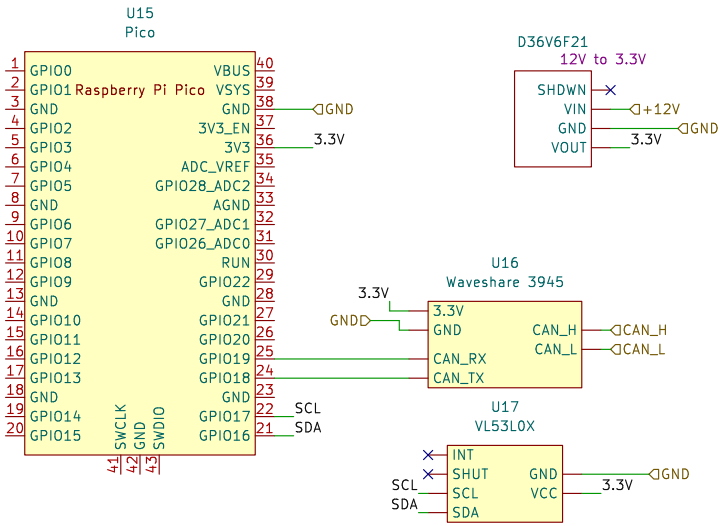

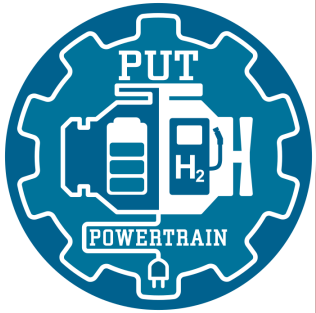

Designers: Krzysztof Grajek, Wojtek Kołodziej

Sheet: /Sensors/Sensor4/
File: sensor.kicad_sch

Title:

Size: A4	Date: 2025-01-09	**Rev:**
KiCad E.D.A. 8.0.3		Id: 26/36

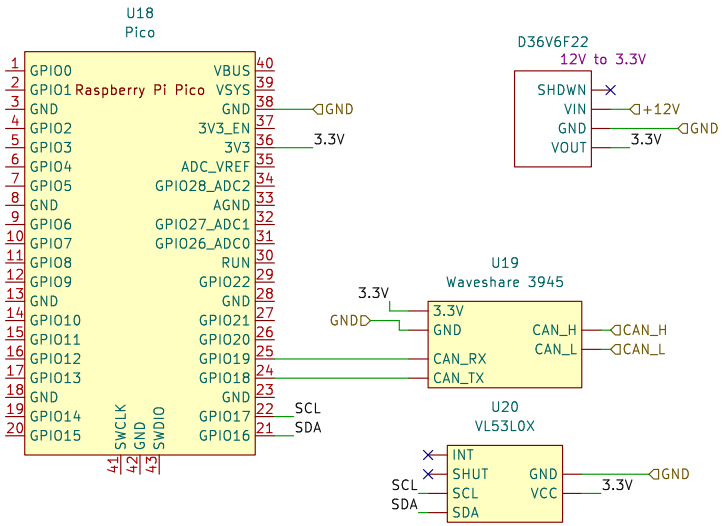

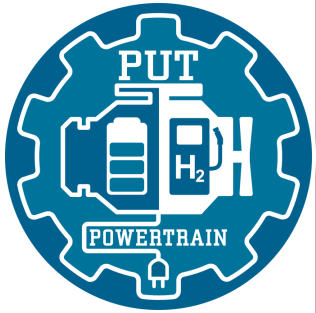

Designers: Krzysztof Grajek, Wojtek Kołodziej

Sheet: /Sensors/Sensor5/
File: sensor.kicad_sch

Title:

Size: A4	Date: 2025-01-09	**Rev:**
KiCad E.D.A. 8.0.3		Id: 27/36

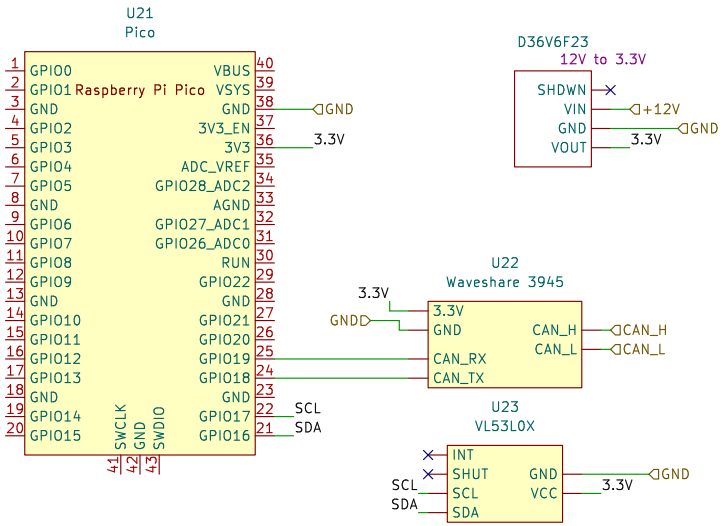

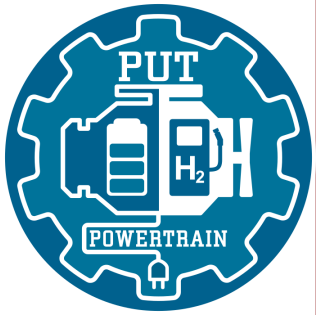

Designers: Krzysztof Grajek, Wojtek Kołodziej

Sheet: /Sensors/Sensor6/
File: sensor.kicad_sch

Title:

Size: A4	Date: 2025-01-09	**Rev:**
KiCad E.D.A. 8.0.3		Id: 28/36

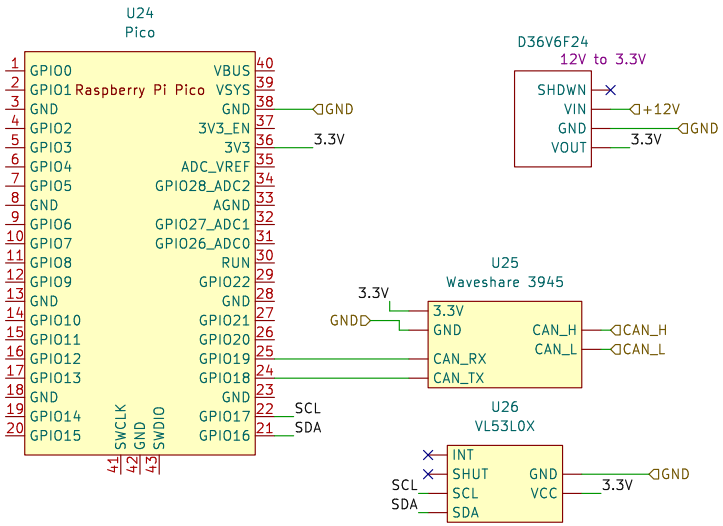

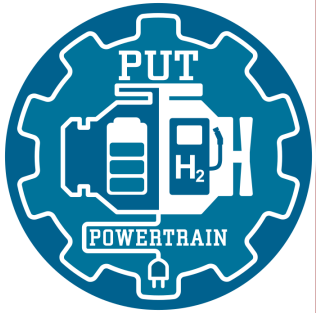

Designers: Krzysztof Grajek, Wojtek Kołodziej

Sheet: /Sensors/Sensor7/
File: sensor.kicad_sch

Title:

Size: A4	Date: 2025-01-09	**Rev:**
KiCad E.D.A. 8.0.3		Id: 29/36

Adjusts the throttle mechanism to regulate the main motor speed

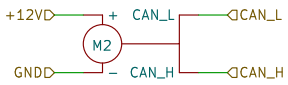

Throttle_Motor

Controls the direction by adjusting the steering rod mechanism

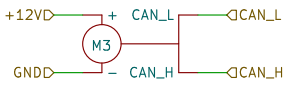

Steering_Rod_Motor

Designers: Krzysztof Grajek, Wojtek Kołodziej

Sheet: /Steering throttle actuators/
File: steering_throttle_actuators.kicad_sch

Title: Steering throttle actuators schematic

Size: A4	Date: 2025-01-09	**Rev:**
KiCad E.D.A. 8.0.3		Id: 30/36

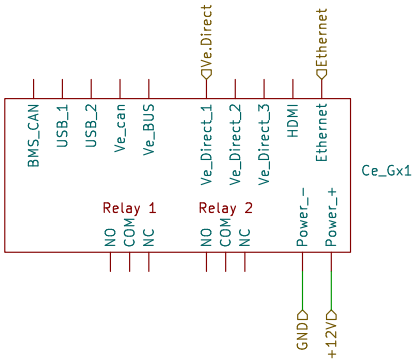

Designers: Krzysztof Grajek, Wojtek Kołodziej

Sheet: /CerboGx/
File: CerboGx.kicad_sch

Title: Cerbo GX schematic

Size: A4	Date: 2025-01-09	**Rev:**
KiCad E.D.A. 8.0.3		Id: 31/36

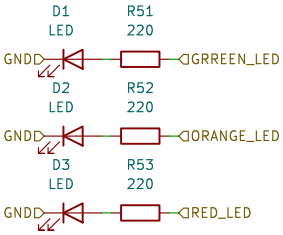

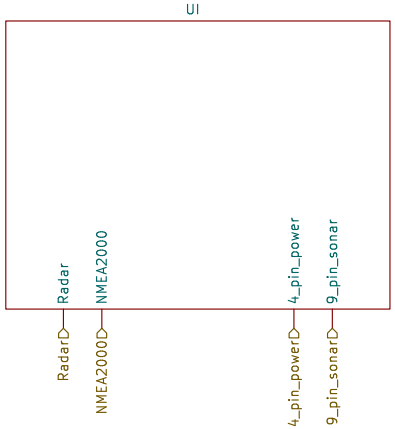

Designers: Krzysztof Grajek, Wojtek Kołodziej

Sheet: /User Interface/
File: User_Interface.kicad_sch

Title: UI schematic

Size: A4	Date: 2025-01-09	**Rev:**
KiCad E.D.A. 8.0.3		Id: 32/36

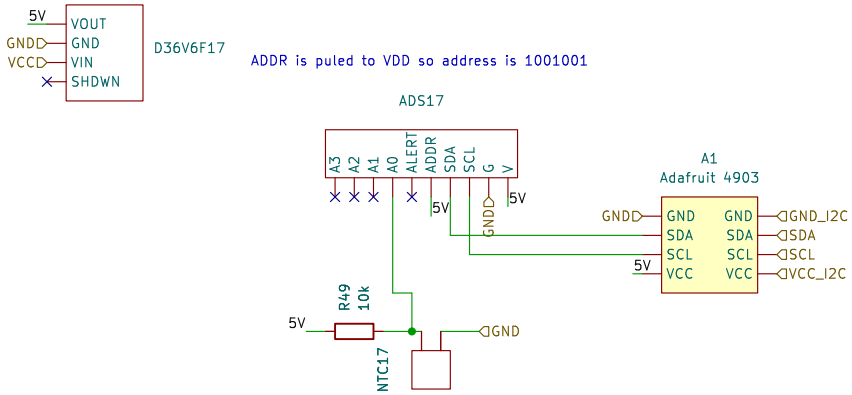

Designers: Krzysztof Grajek, Wojtek Kołodziej

Sheet: /Sensors/Battery_Temp_Sensors/Battery_Temp_Sensor/
File: battery_temp_sensor.kicad_sch

Title:

Size: A4	Date: 2025-01-09	**Rev:**
KiCad E.D.A. 8.0.3		Id: 33/36

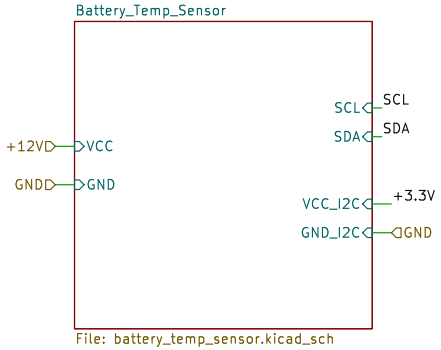

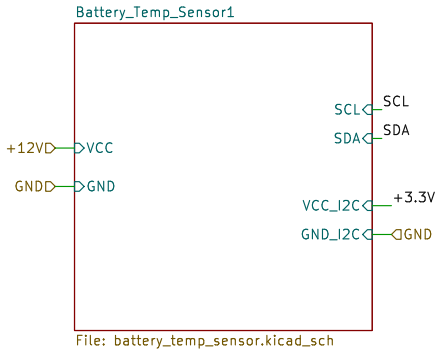

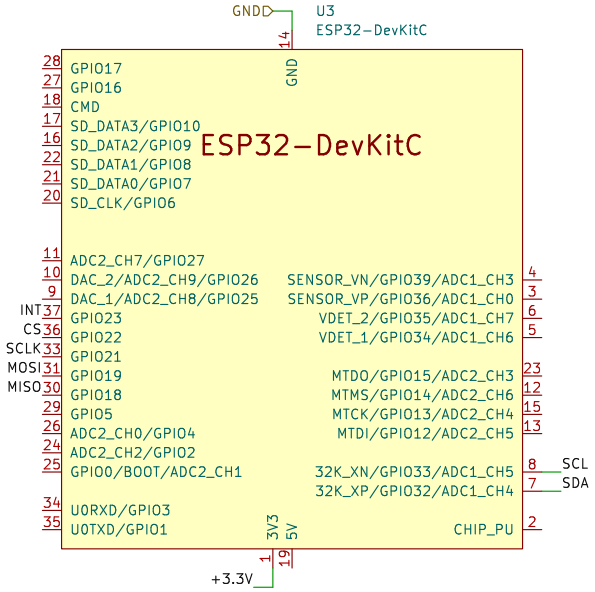

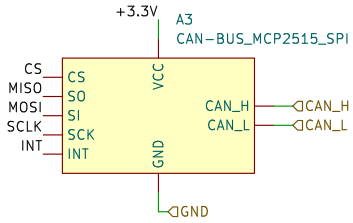

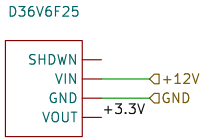

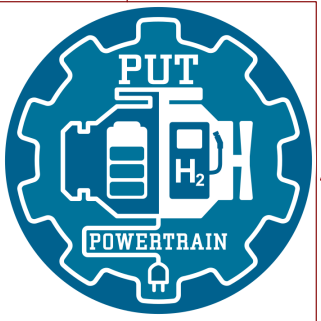

Designers: Krzysztof Grajek, Wojtek Kołodziej

Sheet: /Sensors/Battery_Temp_Sensors/
File: battery_temp_sensors.kicad_sch

Title:

Size: A4	Date: 2025-01-09	**Rev:**
KiCad E.D.A. 8.0.3		Id: 34/36

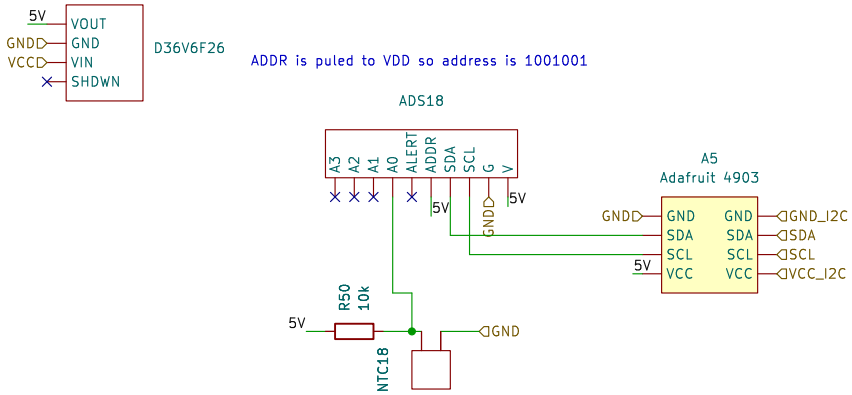

Designers: Krzysztof Grajek, Wojtek Kołodziej

Sheet: /Sensors/Battery_Temp_Sensors/Battery_Temp_Sensor1/
File: battery_temp_sensor.kicad_sch

Title:

Size: A4	Date: 2025-01-09	**Rev:**
KiCad E.D.A. 8.0.3		Id: 35/36

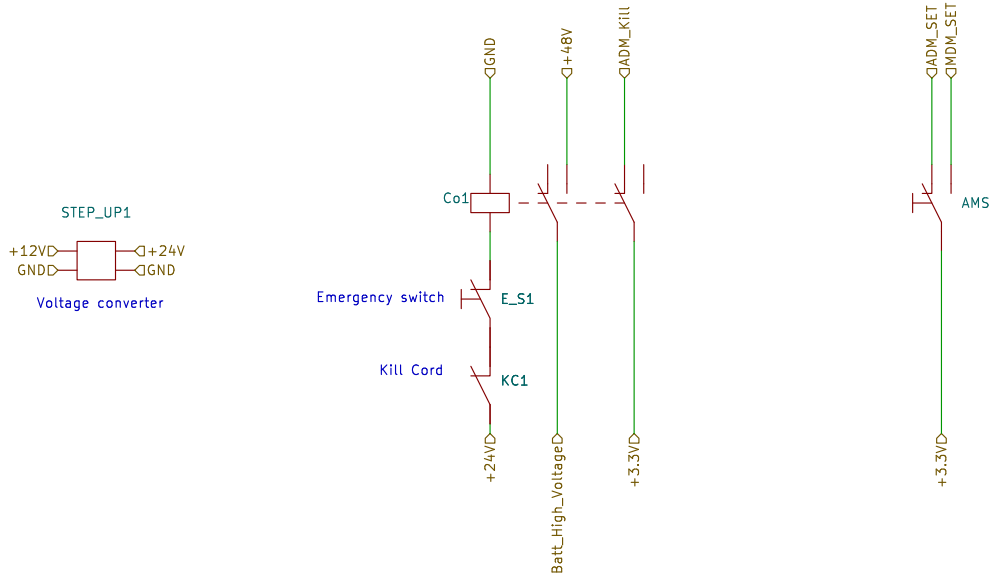

Designers: Krzysztof Grajek, Wojtek Kołodziej

Sheet: /Switching system/
File: switching_system.kicad_sch

Title:

Size: A4	Date: 2025-01-09	**Rev:**
KiCad E.D.A. 8.0.3		Id: 36/36